HOW TO USE THIS MANUAL

0103I–03

GENERAL INFORMATION

1. GENERAL DESCRIPTION

(a) This manual is made in accordance with SAE J2008.

(b) Generally, repair operations can be separated in the following 3 main processes:
1. Diagnosis
2. Removing and Installing, Replacing, Disassembling, Installing and Checking, Adjusting
3. Final Inspection

(c) This manual explains the 1st process of ”Diagnosis” (placed in the ”Diagnostics” section), the 2nd process of ”Removing and Installing, Replacing, Disassembling, Installing and Checking, Adjusting”, but the 3rd process of ”Final Inspection” is omitted.

(d) The following essential operations are not written in this manual. However, these operations must be done in the practical situation.
(1) Operation with a jack or lift
(2) Cleaning of a removed part when necessary
(3) Visual check

2. INDEX

(a) An alphabetical INDEX is provided as a section on the end of the book to guide you to the item to be repaired.

3. PREPARATION

(a) Use of special service tools (SST) and special service materials (SSM) may be required, depending on the repairing condition. Be sure to use SST and SSM when they are required and follow the working procedure properly. A list of SST and SSM is in the Preparation section of this manual.

4. REPAIR PROCEDURES

(a) Component drawing is placed under the title when necessary.

(b) Illustrations are placed as ”disassembled parts drawing” so that it enables you to understand the fitting condition of the components.

(c) Non–reusable parts, grease applied parts, precoated parts and tightening torque are specified in the components drawing.

Example:

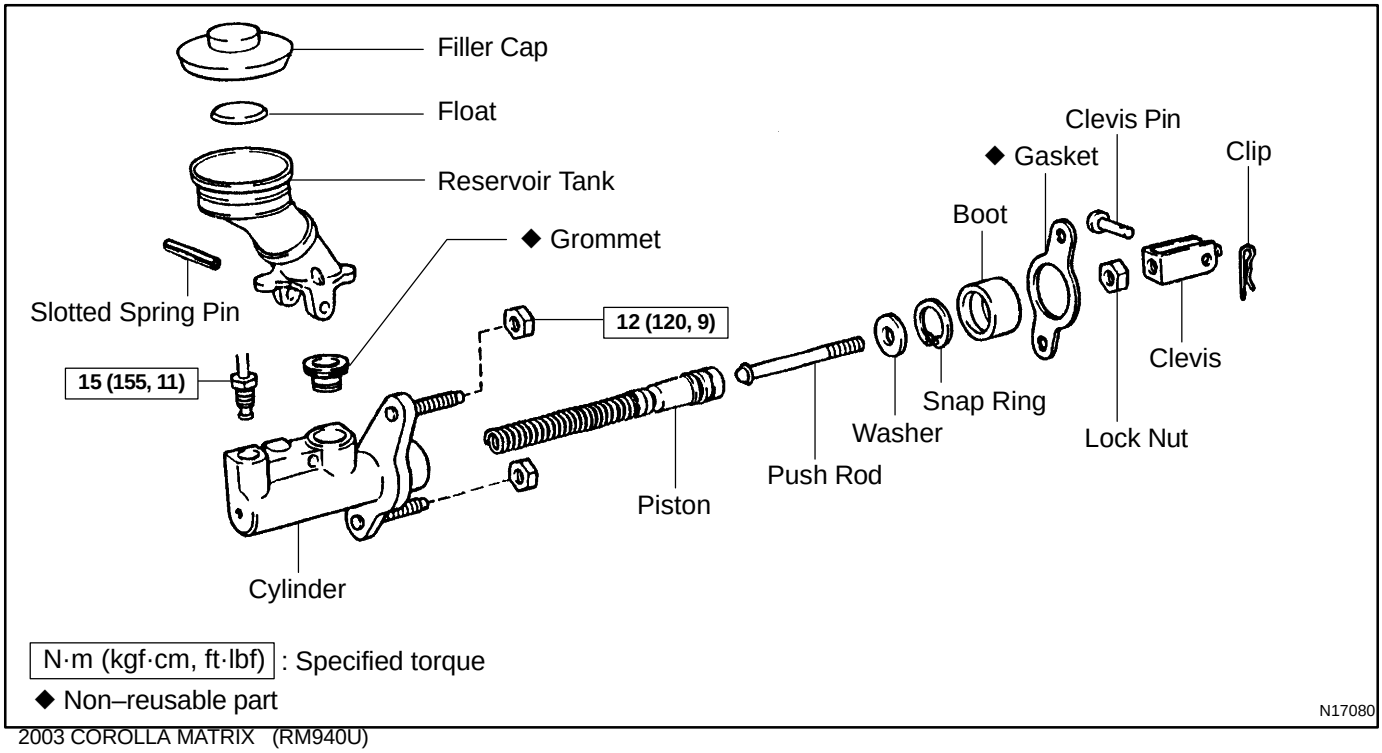

(d) Tightening torque, oil applying position, and non–reusable parts are described as important points in the procedure.

NOTICE:

There are cases where such information can only be indicated by an illustration. In that case, all the information such as torque, oil, etc. are described in the illustration.

(e) Installing procedure of operation items is performed in the reverse order of the removal, and only the important points are described.

(f) Only items with points are described in the procedure, and the operational portion and content are placed using an illustration. In the explanations, details of the operational method, standard value and notice are placed.

(g) There may be a case where the illustrations of the similar models are used. In that case the details may be different from the actual vehicle.

(h) The procedures are presented in a step–by–step format:

(1) The illustration shows what to do and where to do it.

(2) The task heading tells what to do.

(3) The detailed text tells how to perform the task and gives other information such as specifications and warnings.

Example:

Illustration:

what to do and where

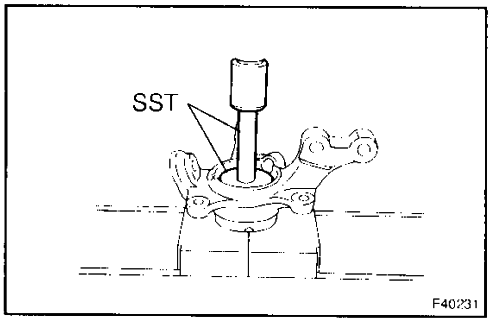

Task heading: what to do

14. INSTALL FRONT AXLE HUB LH BEARING

(a) Using SST and a press, install a new bearing to the steering knuckle. ← *Detailed test: how to perform task*

SST 09950–60020 (09951–00720), 09950–70010 (09951–07100)

Set part No.

Component part No.

D26745

HINT:

This format provides an experienced technician with a FAST TRACK to the necessary information. The task heading can be read at a glance when necessary, and the text below provides detailed information. Important specifications and warnings always stand out in bold type.

5. SERVICE SPECIFICATIONS

(a) Specifications are presented in bold type throughout the manual. You never have to leave the procedure to look up your specifications. The specifications are also found in the Service Specifications section for a quick reference.

6. TERMS DEFINITION

CAUTION	Indicate the possibility of injury to you or other people.
NOTICE	Indicate the possibility of damage to the components being repaired.
HINT	Provide additional information to help you to perform the repair efficiently.

7. SI UNIT

(a) The UNITS given in this manual are primarily expressed according to the SI UNIT (International System of Unit), and alternately expressed in the metric system and in the English System.

Example:

Torque: 30 N·m (310 kgf·cm, 22 ft·lbf)

IDENTIFICATION INFORMATION

VEHICLE IDENTIFICATION AND SERIAL NUMBERS

01031–03

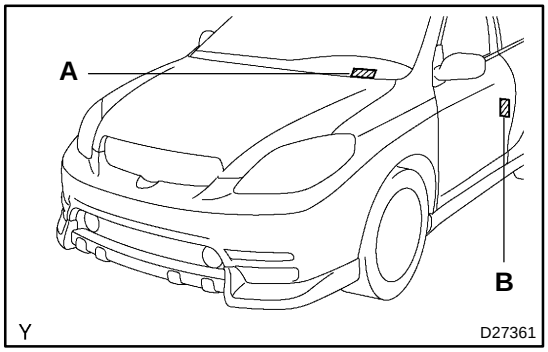

1. VEHICLE IDENTIFICATION NUMBER

(a) The vehicle identification number is stamped on the vehicle identification number plate and certification label, as shown in the illustration.

A: Vehicle Identification Number Plate

B: Certification Label

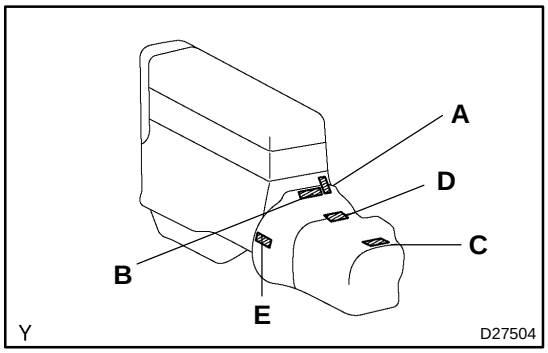

2. ENGINE SERIAL NUMBER AND TRANSAXLE SERIAL NUMBER

(a) The engine serial number is stamped on the cylinder block of the engine, and the transaxle serial number is stamped on the housing, as shown in the illustration.

A: 1ZZ–FE, 2ZZ–GE

B: C59, C60

C: A246E

D: U240E

E: U341F

010DS–01

VEHICLE LIFT AND SUPPORT LOCATIONS

1. NOTICE ABOUT VEHICLE CONDITION WHEN JACKING UP

(a) As a rule, the vehicle must be unloaded when jacking up. Never jack up or lift up the vehicle loaded with things of heavy weight.

(b) When removing any parts of heavy weight like the engine and transmission, the center of gravity of the vehicle moves. Place a balance weight so as to keep it from rolling, or hold the jacking support location using the mission jack.

2. NOTICE FOR USING 4 POST LIFT

(a) Follow the instruction manual for a safety operation.

(b) Do not damage tires or wheels with a free wheel beam.

(c) Using a wheel stopper, fix the vehicle.

3. NOTICE FOR USING JACK AND SAFETY STAND

(a) Work in the flat place using a wheel stopper at all times.

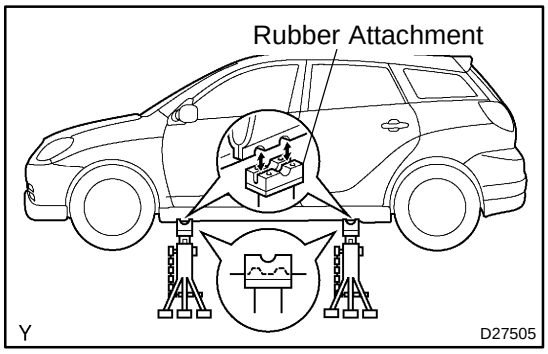

(b) Use a rigid rack with a rubber attachment, as shown in the illustration.

(c) Support the specified location with a jack and safety stand accurately.

(d) When jacking up the front wheels, release the parking brake and place wheel stoppers only behind the rear wheels. When jacking up the rear wheels, place wheel stoppers only in front of the front wheels.

(e) Do not work or leave the vehicle supported only by a jack. Be sure to support the vehicle with a safety stand.

(f) When jacking up only the front wheels or only the rear wheels, place wheel stoppers to both sides of the wheels that contact ground.

(g) When jacking down the vehicle with its front wheels jacked up, release the parking brake and place wheel stoppers only in front of the rear wheels. When jacking down the vehicle with its rear wheel jacked up, place wheel stoppers only behind the front wheels.

4. NOTICE FOR USING PLATE TYPE LIFT

(a) Follow the instruction manual of the lift for a safe operation.

(b) Use a plate lift attachment.

(c) Be sure to set the vehicle to the specified position.

(d) Lift the vehicle up until the tires float a bit, and shake the vehicle to make sure that the vehicle is stable.

2WD

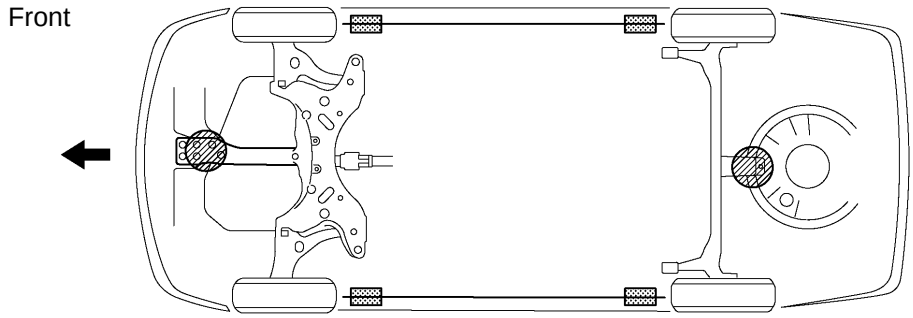

4WD

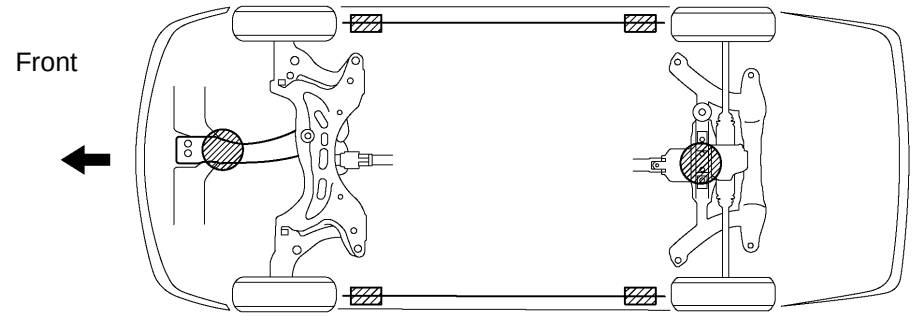

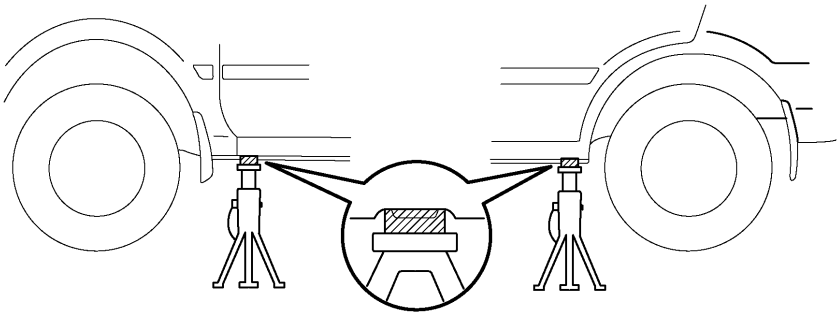

JACK POSITION ——————————

Front - - - - - - - - - - Front crossmember
Rear - - - - - - - - - - Rear axle beam (2WD), Rear differential carrier (4WD)

CAUTION : When jacking up the rear and front, make sure the car is not carrying any extra weight.

PANTOGRAPH JACK POSITION ——————————

SUPPORT POSITION ——————————

Safety stand and swing arm type lift

Y

D27367

PLATE TYPE LIFT

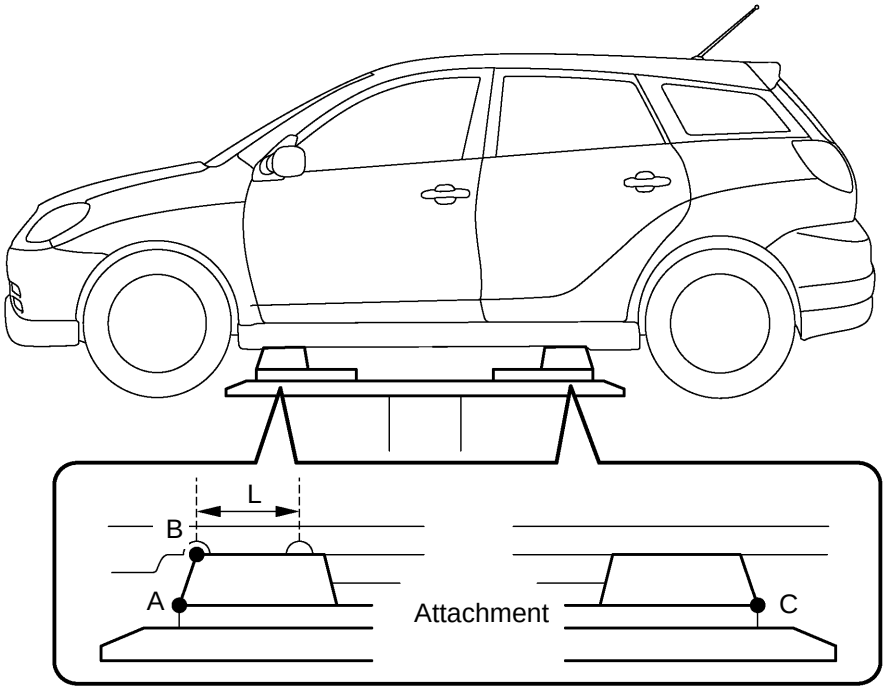

HINT:

Left and right set position	Place the vehicle over the center of the lift.
Front and rear set position	● Align the cushion gum ends of the plate with the attachment lower ends (A, C). ● Align the attachment upper end (B) with the front jack supporting point (L).

Attachment dimensions

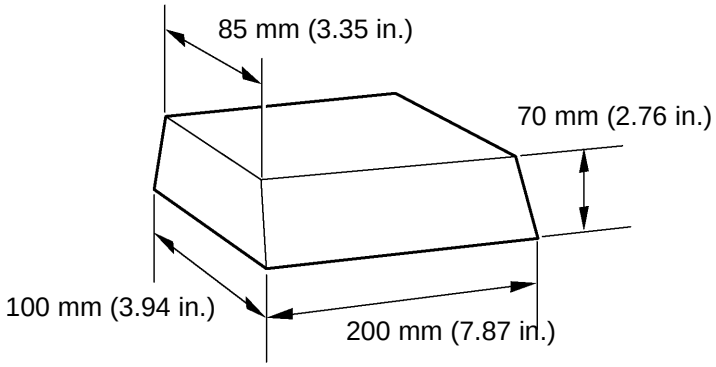

Y

D27363

REPAIR INSTRUCTION

010DR–01

PRECAUTION

1. BASIC REPAIR HINT

(a) HINTS ON OPERATIONS

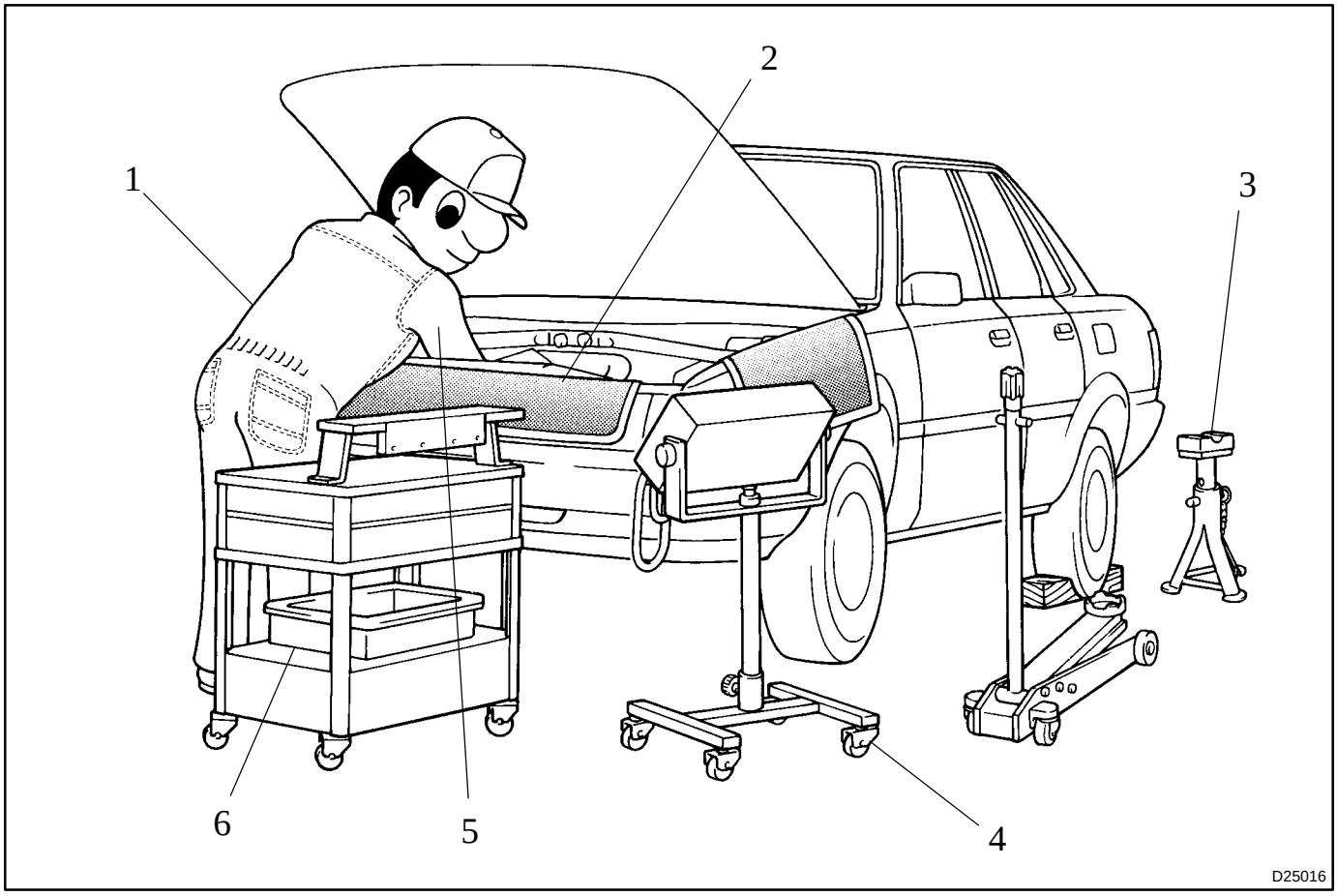

1	Looks	• Always wear a clean uniform. • Hat and safety shoes must be worn.
2	Vehicle protection	• Set a grill cover, fender cover, seat cover and floor mat before starting the operation.
3	Safe operation	• In case of working with 2 or more persons, be sure to check safety of one another. • When working with the engine running, pay attention to the ventilation of the workshop. • In case of operating on high–temperature parts, rotating, moving and vibrating parts, pay attention not to burn or injure yourself. • When jacking up the vehicle, be sure to support the specified location with a safety stand. • When lifting up the vehicle, apply a safety equipment.
4	Preparation of tools and measuring gauge	• Before starting operation, prepare a tool stand, SST, gauge, oil, shop rag and parts for replacement.
5	Removal and installation, disassembly and assembly operations	• Diagnose with a thorough understanding of the trouble phenomenon and perform effective operations. • Before removing the parts, check the assembly for general condition, deformation and damage. • When the structure is complicated, take a note or put matchmarks so as not to make mistakes that affect the function of the parts. • Clean and wash the removed parts if necessary, and assemble them after a thorough check.
6	Removed parts	• Place the removed parts in the correct order to avoid mixing up or making them dirty. • As for non–reusable parts such as gasket, O–ring, and self lock nut, change them to new ones following the instruction of this manual. • Sort out the parts for replacement in a box and show them to the customer.

(b) JACKING UP AND SUPPORTING VEHICLE

(1) Care must be taken when jacking up and supporting the vehicle. Be sure to lift and support the vehicle at the proper locations (See page 01–20).

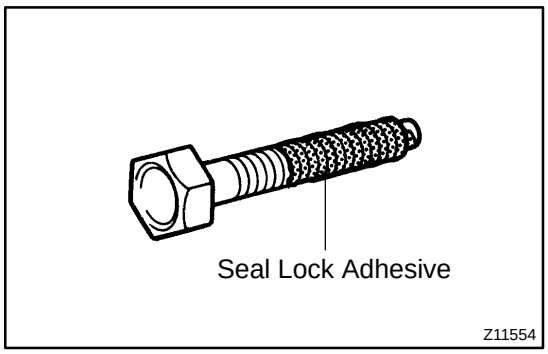

(c) PRECOATED PARTS

(1) Precoated parts are bolts, nuts, etc. that are coated with a seal lock adhesive at the factory.

(2) If a precoated part is retightened, loosened or caused to move in any way, it must be recoated with the specified adhesive.

(3) When reusing precoated parts, clean off the old adhesive and dry the part with compressed air. Then apply the specified seal lock adhesive to the bolt, nut or threads.

NOTICE:

Perform the torque checking with the lower limit value of the torque tolerance.

(4) Depending on the seal lock agent to apply, there may be a case where it is necessary to leave it for a specified time until it hardens.

(d) GASKETS

(1) When necessary, use a sealer on gaskets to prevent leaks.

(e) BOLTS, NUTS AND SCREWS

(1) Carefully observe all the specifications for tightening torques. Always use a torque wrench.

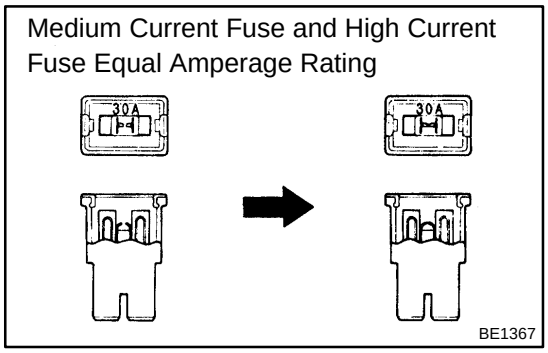

(f) FUSES

(1) When replacing fuses, be sure that a new fuse has the correct amperage rating. DO NOT exceed the rating, or use one with a lower rating.

Illustration	Symbol	Part Name	Abbreviation
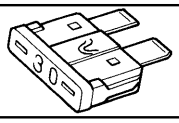 BE5594	 IN0365	FUSE	FUSE
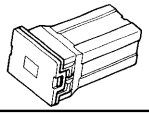 BE5595	 IN0366	MEDIUM CURRENT FUSE	M–FUSE
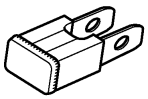 D27353	 IN0367	HIGH CURRENT FUSE	H–FUSE

V35001

(g) CLIPS

(1) The removal and installation methods of typical clips used in body parts are shown in the table below.

HINT:

If the clip is damaged during the operation, always replace it with a new clip.

Shape (Example)	Removal/Installation
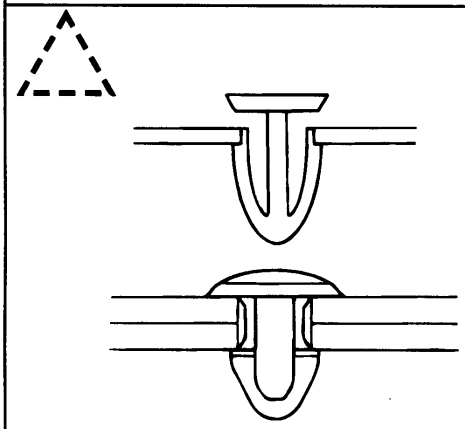	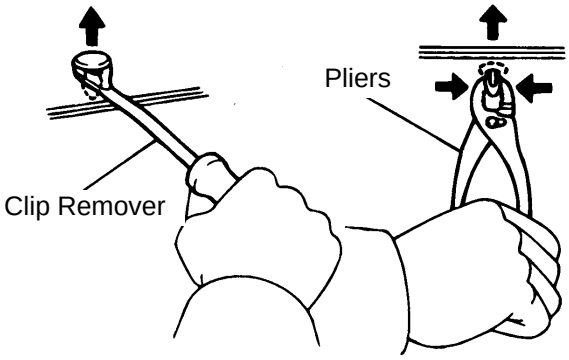
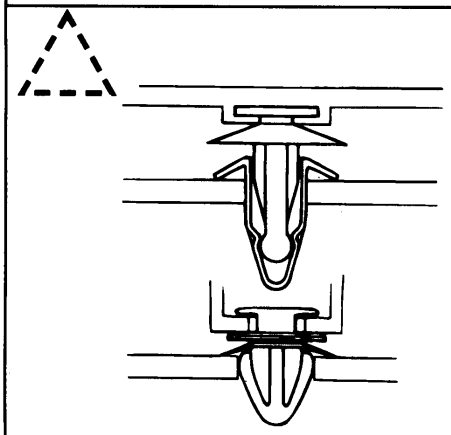	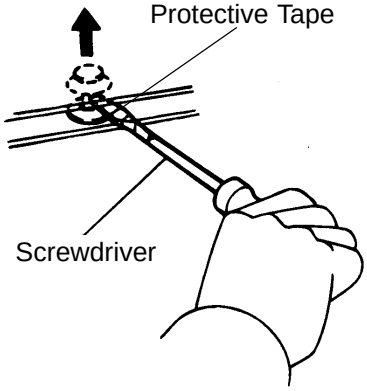
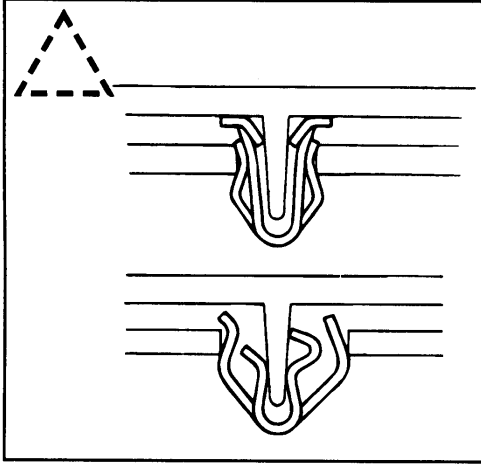	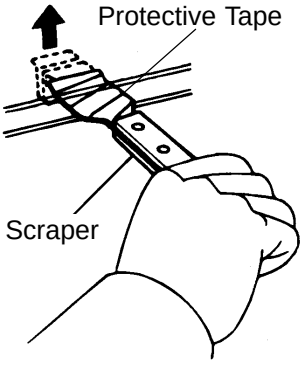

D25786

Shape (Example)	Removal/Installation
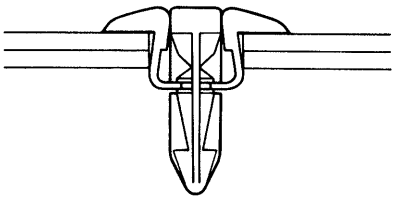	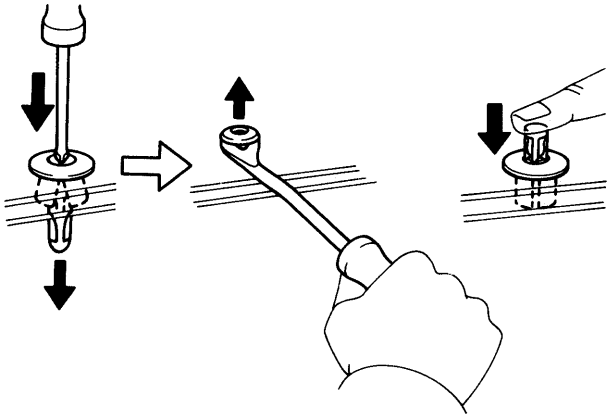
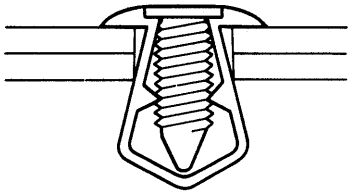	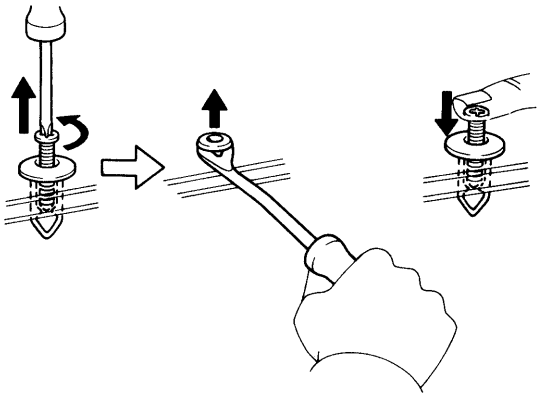

V00012

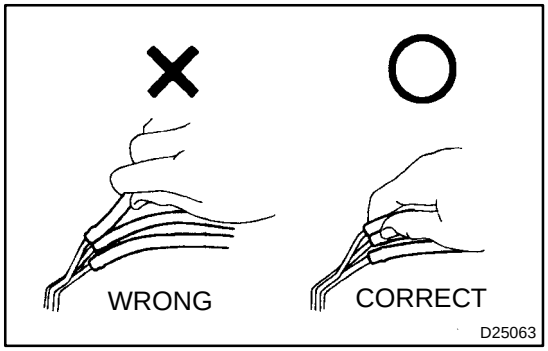

(h) REMOVAL AND INSTALLATION OF VACUUM HOSES

(1) To disconnect vacuum hoses, pull them by holding the end, not the middle of the hose.

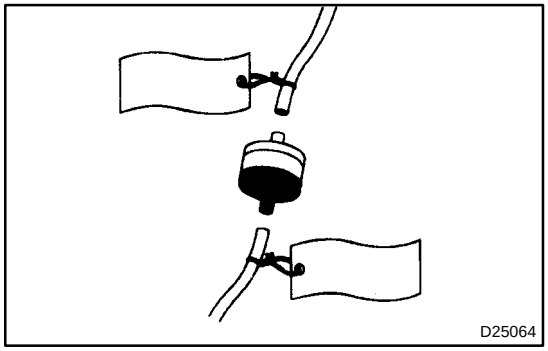

(2) When disconnecting vacuum hoses, use tags to identify where they should be reconnected.

(3) After completing the job, make a double check whether the vacuum hoses are properly connected. A label under the hood shows the proper layout.

(4) When using a vacuum gauge, never force the hose onto a connector that is too large. Use a step–down adapter for adjustment. Once the hose has been stretched, it may leak air.

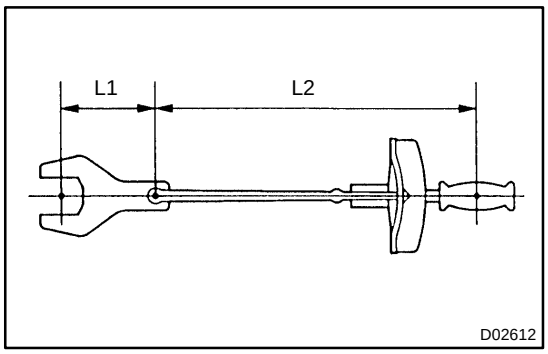

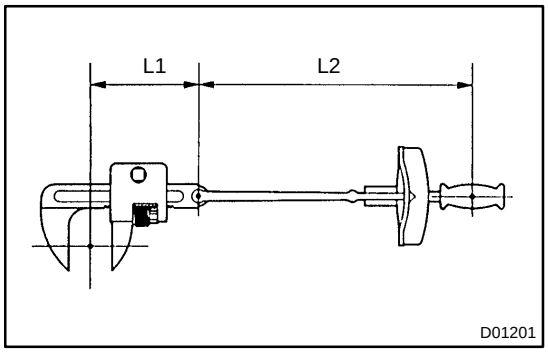

(i) TORQUE WHEN USING TORQUE WRENCH WITH EXTENSION TOOL

(1) In case of tightening with a torque wrench which has an extended length by combining the torque wrench with SST or extension tool, if you tighten until the reading of the torque wrench reaches the specified torque value the actual torque becomes excessive.

(2) In this manual, only the specified torque is described. In case of using SST or an extension tool, calculate the reading of the torque wrench by the following formula.

(3) Formula T'=T x L2/(L1 + L2)

T'	Reading of torque wrench {N·m (kgf·cm, ft·lbf)}
T	Torque {N·m (kgf·cm, ft·lbf)}
L1	Length of SST or extension tool (cm)
L2	Length of torque wrench (cm)

2. FOR VEHICLES EQUIPPED WITH SRS AIRBAG AND SEAT BELT PRETENSIONER

HINT:

The vehicle is equipped with an SRS (Supplemental Restraint System), such as the horn button assembly, the instrument panel passenger airbag assembly, the front seat airbag assembly, the center airbag sensor assembly, the front airbag sensor, the side airbag sensor and the seat belt pretensioner.

Failure to carry out the service operations in the correct sequence could cause the supplemental restraint system to unexpectedly deploy during servicing. It may lead to a serious accident.

Furthermore, if a mistake is made in servicing the supplemental restraint system, it is possible that the SRS will fail to operate when required. Before servicing (including removal or installation of parts, inspection or replacement), be sure to read the following items carefully. Then follow the correct procedure described in this manual.

(a) GENERAL NOTICE

(1) Malfunction symptoms of the supplemental restraint system are difficult to confirm, so the diagnostic trouble codes become the most important source of information when troubleshooting. When troubleshooting the supplemental restraint system, always check the diagnostic trouble codes before disconnecting the battery (See page 05–543).

(2) Work must be started after 90 seconds from the time the ignition switch is turned to the "LOCK" position and the negative (–) terminal cable is disconnected from the battery.
(The supplemental restraint system is equipped with a back–up power source, so, if work is started within 90 seconds after disconnecting the negative (–) terminal cable from the battery, the SRS may deploy.)
When the negative (–) terminal cable is disconnected from the battery, memory of the clock and audio systems will be cancelled. So, before starting work, make a record of the memorized contents in each memory system. Then, when work is finished, reset the clock and audio systems as before. To avoid erasing the memory in each memory system, never use a back–up power supply from another battery.

(3) Even in case of a minor collision where the SRS does not deploy, the horn button assembly, the instrument panel passenger airbag assembly, the front seat airbag assembly and the seat belt pretensioner should be inspected (See pages 60–14, 60–27, 60–33 and 61–8).
(4) Never use SRS related parts from another vehicle. When replacing parts, replace them with new parts.
(5) Before repairs, remove the airbag sensor if shocks are likely to be applied to the sensor during repairs.
(6) Never disassemble and repair the airbag sensor assembly, the horn button assembly, the instrument panel passenger airbag assembly, the front seat airbag assembly or the seat belt pretensioner.
(7) If the airbag sensor assembly, the side airbag sensor assembly, the horn button assembly, the instrument panel passenger airbag assembly, the front seat airbag assembly or the seat belt pretensioner have been dropped, or if there are cracks, dents or other defects in the case, bracket or connector, replace them with new ones.
(8) Do not directly expose the airbag sensor assembly, the horn button assembly, the instrument panel passenger airbag assembly, the front seat airbag assembly or the seat belt pretensioner to hot air or flames.
(9) Use a volt/ohmmeter with high impedance (10 kΩ/V minimum) for troubleshooting of an electrical circuit.
(10) Information labels are attached to the SRS components. Follow the instructions on the notices.
(11) After work on the supplemental restraint system is completed, check the SRS warning light (See page 05–543).

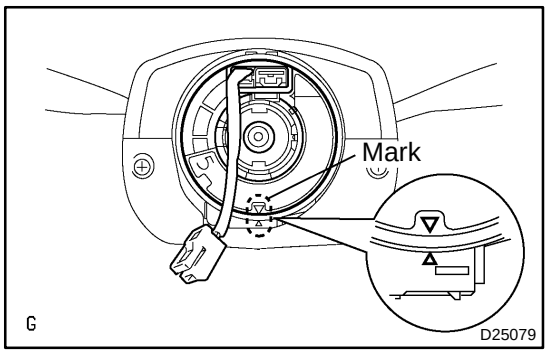

(b) SPIRAL CABLE (in Combination Switch)
(1) The steering wheel must be fitted correctly to the steering column with the spiral cable at the neutral position, otherwise cable disconnection and other troubles may occur. Refer to page 60–22 on this manual concerning the correct installation of the steering wheel.

(c) HORN BUTTON ASSEMBLY (with Airbag)
(1) When removing the horn button assembly or handling a new horn button, it should be placed with the pad top surface facing upward. Placing it with the pad surface facing downward may lead to a serious accident if the airbag accidentally inflates. Also, do not place the horn button on top of one another.
(2) Never measure the resistance of the airbag squib (This may cause the airbag to inflate, which is very dangerous).
(3) Grease should not be applied to the horn button assembly, and the pad should not be cleaned with detergents of any kinds.
(4) Store the horn button assembly where the ambient temperature remains below 93°C (200°F), without high humidity and away from electrical noise.
(5) When using electric welding, first disconnect the airbag connector (2 yellow pins) under the steering column near the combination switch connector before starting work.

(6) When disposing of the vehicle or the horn button assembly alone, the airbag should be deployed using an SST before disposal (See page 60–14).
Perform the operation in a safe place away from electrical noise.

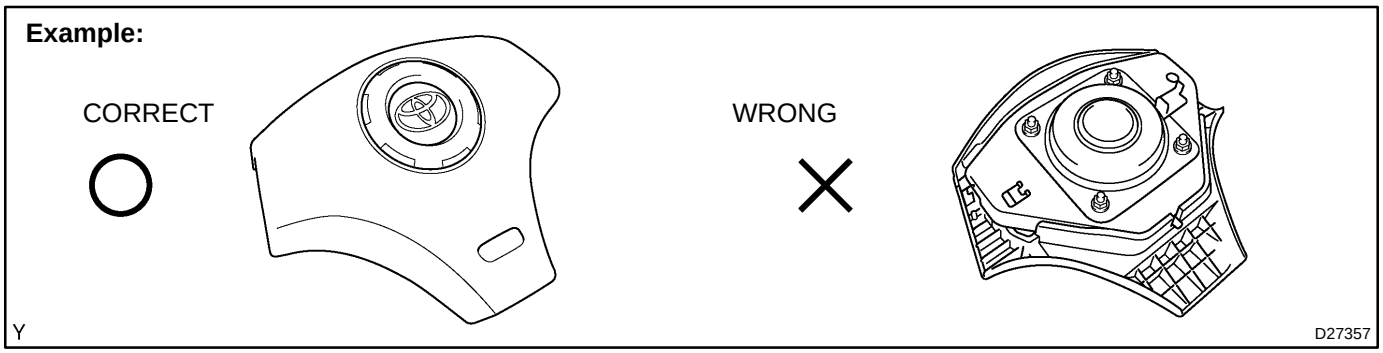

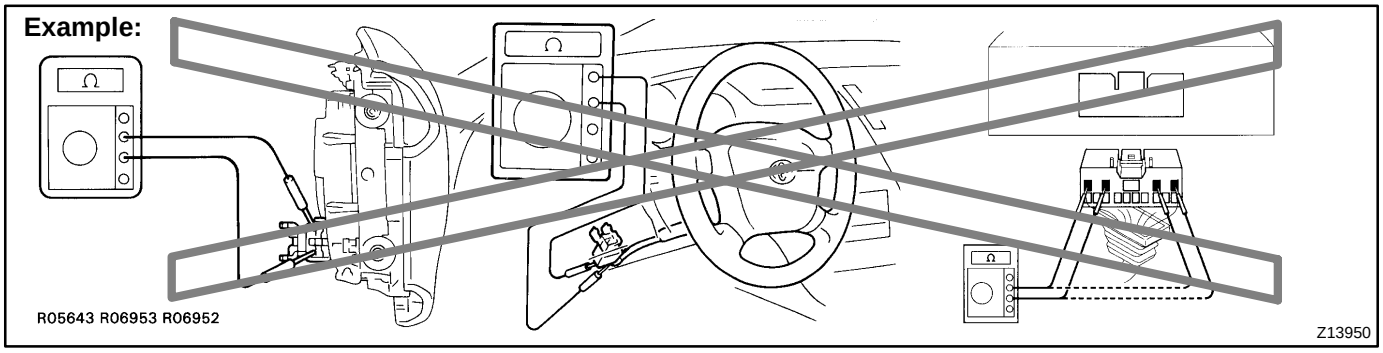

(d) INSTRUMENT PANEL PASSENGER AIRBAG ASSEMBLY

(1) Always store a removed or new instrument panel passenger airbag assembly with the airbag inflation direction facing upward. Placing the airbag assembly with the airbag inflation direction facing downward could cause a serious accident if the airbag inflates.

(2) Never measure the resistance of the airbag squib (This may cause the airbag to inflate, which is very dangerous).

(3) Grease should not be applied to the instrument panel passenger airbag assembly, and the airbag door should not be cleaned with detergents of any kind.

(4) Store the airbag assembly where the ambient temperature remains below 93°C (200°F), without high humidity and away from electrical noise.

(5) When using electric welding, first disconnect the airbag connector (2 yellow pins) installed on the assembly before starting work.

(6) When disposing of a vehicle or the airbag assembly alone, the airbag should be deployed using an SST before disposal (See page 60–27).
Perform the operation in a safe place away from electrical noise.

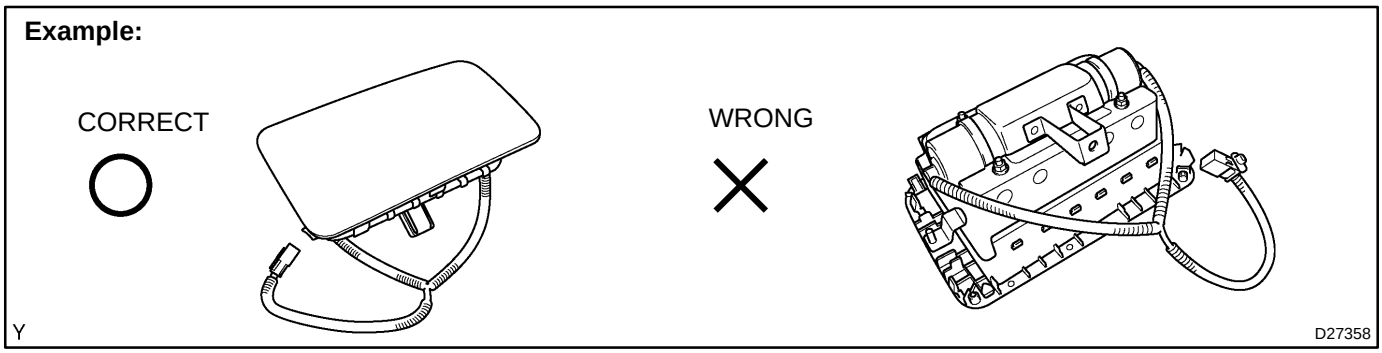

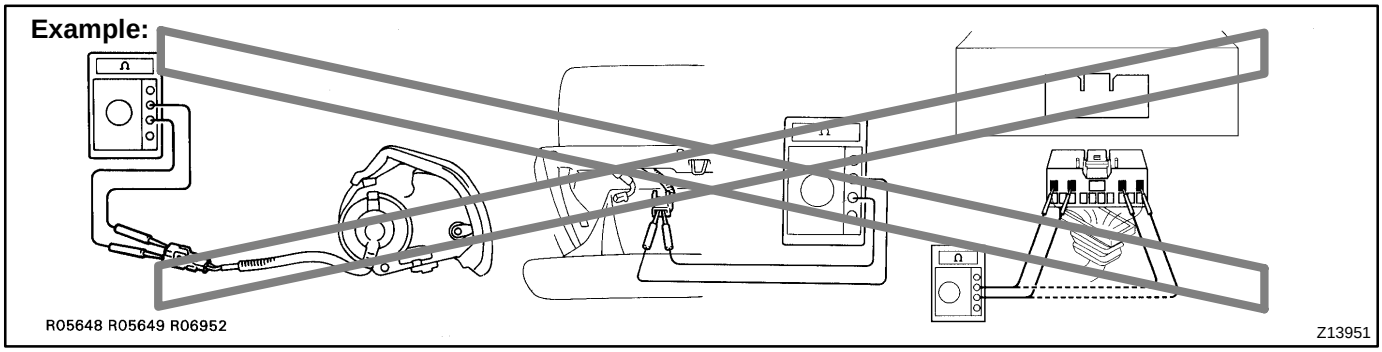

(e) FRONT SEAT AIRBAG ASSEMBLY

(1) Always store a removed or new front seat airbag assembly with the airbag inflation direction facing upward. Placing the airbag assembly with the airbag inflation direction facing downward could cause a serious accident if the airbag inflates.

(2) Never measure the resistance of the airbag squib (This may cause the airbag to inflate, which is very dangerous).

(3) Grease should not be applied to the front seat airbag assembly, and the airbag door should not be cleaned with detergents of any kind.

(4) Store the airbag assembly where the ambient temperature remains below 93˚C (200˚F), without high humidity and away from electrical noise.

(5) When using electric welding, first disconnect the airbag connector (2 yellow pins) installed on the assembly before starting work.

(6) When disposing of a vehicle or the side airbag assembly alone, the airbag should be deployed using an SST before disposal (See page 60–33).
Perform the operation in a safe place away from electrical noise.

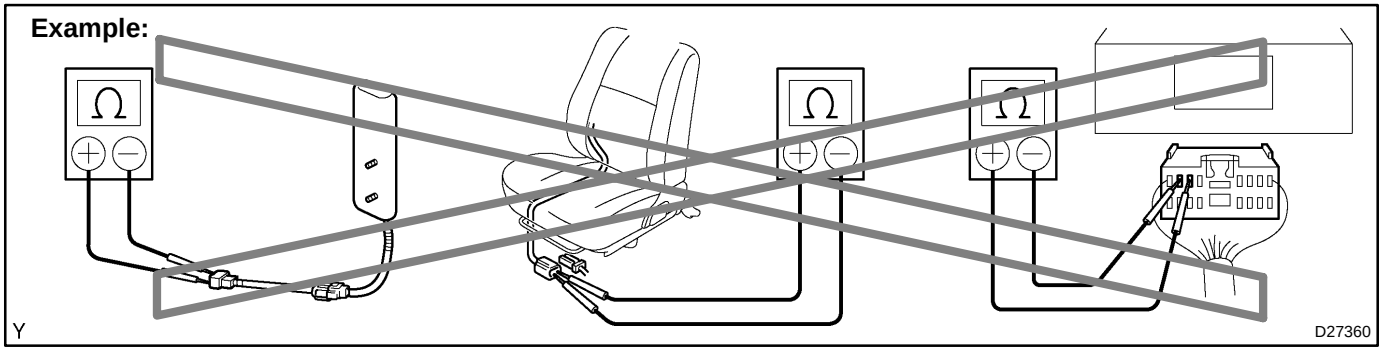

(f) SEAT BELT PRETENSIONER

(1) Never measure the resistance of the seat belt pretensioner (This may cause the seat belt pretensioner to activate, which is very dangerous).

(2) Never disassemble the seat belt pretensioner.

(3) Never install the seat belt pretensioner to another vehicle.

(4) Store the seat belt pretensioner where the ambient temperature remains below 80°C (176°F) without high humidity and away from electrical noise.

(5) When using electric welding, first disconnect the connector (2 yellow pins) before starting work.

(6) When disposing of a vehicle or the seat belt pretensioner alone, the seat belt pretensioner should be activated before disposal (See page 61–8).
Perform the operation in a safe place away from electrical noise.

(7) The seat belt pretensioner is hot after activation, so let it cool down sufficiently before disposal. Never apply water to cool down the seat belt pretensioner.

(8) Oil or water should not be put on the front seat outer belt, and the front seat outer belt should not be cleaned with detergents of any kind.

Example:

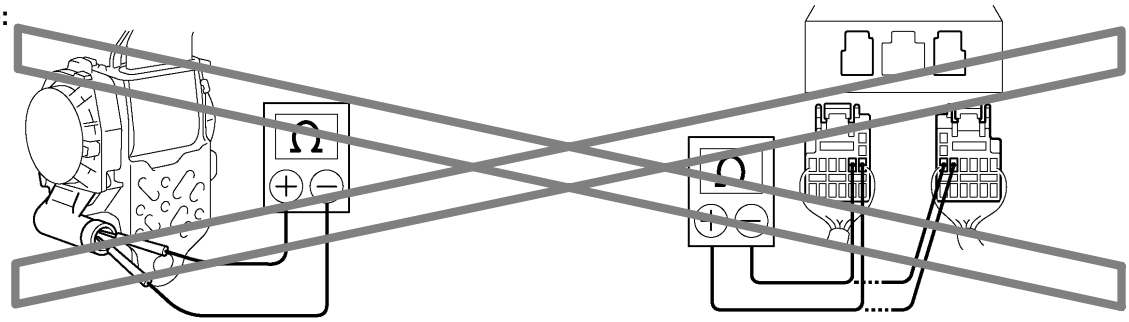

Y D26613

(g) AIRBAG SENSOR ASSEMBLY

(1) Never reuse the airbag sensor assembly involved in a collision where the SRS has deployed.

(2) The connectors to the airbag sensor assembly should be connected or disconnected with the sensor mounted on the floor. If the connectors are connected or disconnected while the airbag sensor assembly is not mounted to the floor, it could cause an undesired ignition of the supplemental restraint system.

(3) Work must be started after 90 seconds from the time the ignition switch is turned to the ”LOCK” position and the negative (–) terminal cable is disconnected from the battery, even if only loosening the set bolts of the airbag sensor assembly.

(h) WIRE HARNESS AND CONNECTOR

(1) The SRS wire harness is integrated with the instrument panel wire harness assembly. All the connectors in the system are in a standard yellow color. If the SRS wire harness becomes disconnected or the connector becomes broken due to an accident, etc., repair or replace it.

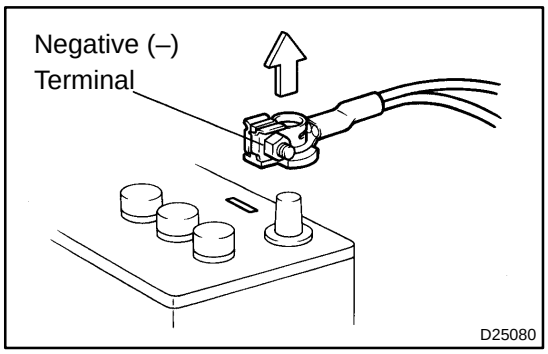

3. ELECTRONIC CONTROL

(a) REMOVAL AND INSTALLATION OF BATTERY TERMINAL

(1) Before performing electrical work, disconnect the battery negative (–) terminal cable beforehand so as to prevent burnt–out damage by short.

(2) When disconnecting and installing the terminal cable, turn the ignition switch and lighting switch OFF, and loosen the terminal nut completely. Perform these operations without twisting or prying the terminal.

(3) When the battery terminal is removed, all the memories of the clock, radio, DTCs, etc. will be erased. So before removing it, check them and note them down.

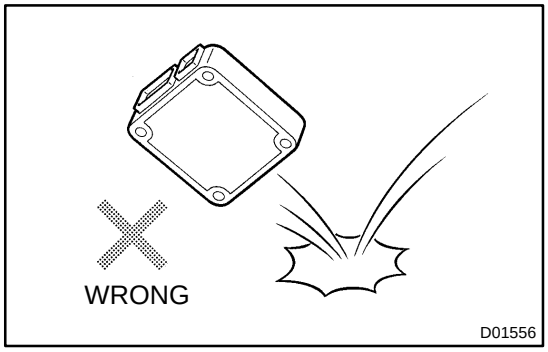

(b) HANDLING OF ELECTRONIC PARTS

(1) Do not open the cover or case of the ECU unless absolutely necessary (If the IC terminals are touched, the IC may be destroyed by static electricity).

(2) To disconnect electronic connectors, pull the connector itself, not the wires.

(3) Be careful not to drop electronic components, such as sensors or relays. If they are dropped on a hard floor, they should be replaced and not be reused.

(4) When cleaning the engine with steam, protect the electronic components, air filter and emission–related components from water.

(5) Never use an impact wrench to remove or install temperature switches or temperature sensors.

(6) When checking the continuity at the wire connector, insert the tester probe carefully to prevent terminals from bending.

4. REMOVAL AND INSTALLATION OF FUEL CONTROL PARTS

(a) PLACE FOR REMOVING AND INSTALLING OF FUEL SYSTEM PARTS

(1) Work in a place with good air ventilation and without anything flammable such as welder, grinder, drill, electric motor or stove in the surroundings.

(2) Never work in a place such as a pit or nearby a pit, as there is a possibility that vaporized fuel is filled in those places.

(b) REMOVING AND INSTALLING OF FUEL SYSTEM PARTS

(1) Prepare a fire extinguisher before starting the operation.

(2) For prevention of the static electricity, install a ground on the fuel changer, vehicle and fuel tank, and do not spray much water so as to prevent slipping.

(3) Never use any electric equipment like an electric motor or a working light, as they may cause sparks or high temperature.

(4) Never use an iron hammer, as it may cause sparks.

(5) Dispose of the shop rag separately from any fuel deposit.

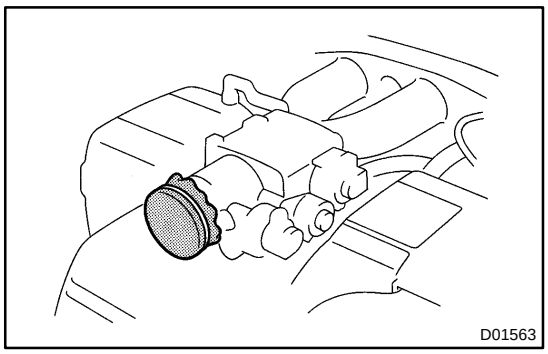

5. REMOVAL AND INSTALLATION OF ENGINE INTAKE PARTS

(a) If any metal tip is mixed in the inlet pass, that may give a bad effect to the engine and turbocharger.

(b) When removing and installing the inlet system parts, close the opening of the removed inlet system parts and the engine with a clean shop rag or gummed tape.

(c) When installing the inlet system parts, check that there is in order no mixing of a metal tip.

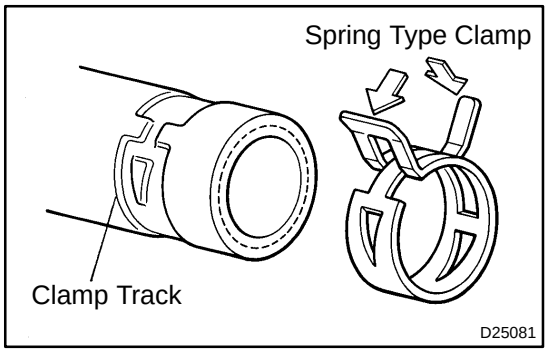

6. HANDLING OF HOSE CLAMPS

(a) Before removing the hose, check the clamp position in order to restore it securely.

(b) Change a deformed or dented clamp into a new one.

(c) In case of reusing the hose, install the clamp on the hose where it has a clamp track.

(d) For a spring type clamp, make adjustment by adding force to the arrow mark direction after the installation.

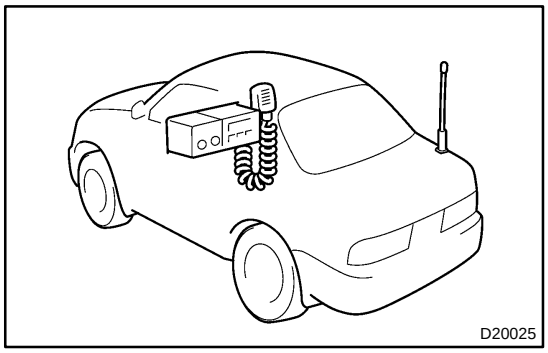

7. FOR VEHICLES EQUIPPED WITH MOBILE COMMUNICATION SYSTEM

(a) Install an antenna as far as possible away from the ECU and sensors of the vehicle's electronic systems.

(b) Install an antenna feeder at least 20 cm (7.87 in.) away from the ECU and sensors of the vehicle's electronic systems. For details of the ECU and sensors locations, refer to the section on the applicable component.

(c) Prevent the antenna feeder from getting entangled with the other wirings, and keep the antenna feeder separately from the other wirings as much as possible.

(d) Check that the antenna and feeder are correctly adjusted.

(e) Do not install any powerful mobile communication system.

8. WHEN SERVICING FULL–TIME 4WD VEHICLES

(a) BEFORE BEGINNING TEST

NOTICE:

Tester with a function of 2–wheel load setting (2–wheel power absorption type) cannot be used; such as a 2–wheel chassis dynamometer, and a combined tool of a 2–wheel chassis dynamometer, a speedometer tester and a brake tester.

(b) BRAKING FORCE TEST (Vehicle speed: 0.5 km/h or 0.3 mph)

When performing measuremint with a low–speed type brake tester, observe the following instructions.

(1) Position the wheels to be tested (front or rear) on the rollers.

(2) Set another wheels free by free rollors or safety stands.

(3) Shift the transmission shift lever into the "N" range.

(4) Fasten the vehicle with lock chains.

(5) Idle the engine, and perform measurement by driving the tester rollers.

NOTICE:

- **Tester with a function of load measurement cannot be used.**
- **High–speed type brake tester cannot be used.**

(c) SPEEDOMETER TEST OR OTHER TESTS (Using speedometer or chassis dynamometer)
When performing test, use the method shown below.
(1) Place the front wheels onto the rollers.
(2) Set the rear wheels free with free rollers or safety stands.
(3) Fasten the vehicle with lock chains.
(4) Start the engine, and then measure the vehicle speed by increasing the speed gradually in the ”D” range.
(5) After the measurement completion, decrease the vehicle speed with brake gradually, and then stop the vehicle.

NOTICE:

- **Inspection should be performed in the front wheels.**
- **Do not start, accelerate or decelerate the vehicle suddenly.**
- **Maximum vehicle speed must be below 60 km/h or 37 mph (when using a free roller, it must be below 50 km/h or 31 mph).**
- **Driving time for the test should be within 1 minute.**

HINT:
Only the tests of No.3 and No.4, shown in the table below, can have a high–speed test or heavy load test.

No.	Chassis Dynamometer Type	Vehicle Condition	Vehicle Speed and Test Time
1	2–Wheel Chassis Dynamometer	Rear wheels lifted free with safety stands 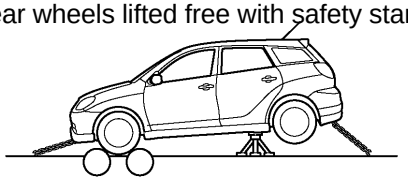	Low speed (50 km/h or less) and 1minute or less
		Rear wheels on rollers 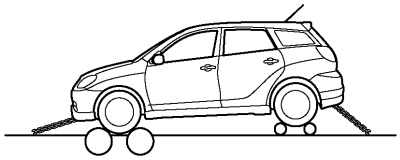	Low speed (50 km/h or less) and 1minute or less
2	4–Wheel Free Chassis Dynamometer	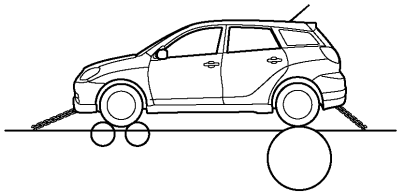	Low speed (50 km/h or less) and 1minute or less
3	4–Wheel Driven Chassis Dynamometer	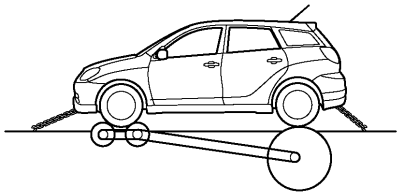	No restriction on vehicle speed and duration of test
4	2–Wheel Chassis Dynamometer	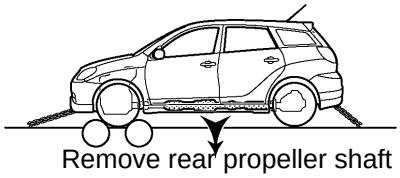 Remove rear propeller shaft	No restriction on vehicle speed and duration of test

NOTICE:

- **Confirm that the vehicle is securely immobilized.**
- **Never operate the clutch or brakes, and never drive the wheels or decelerate suddenly.**
- **Be sure to strictly follow the above procedure for the test, because functions of 4WD system might fail, parts of driving system might malfunction, or the vehicle might unexpectedly jump out.**

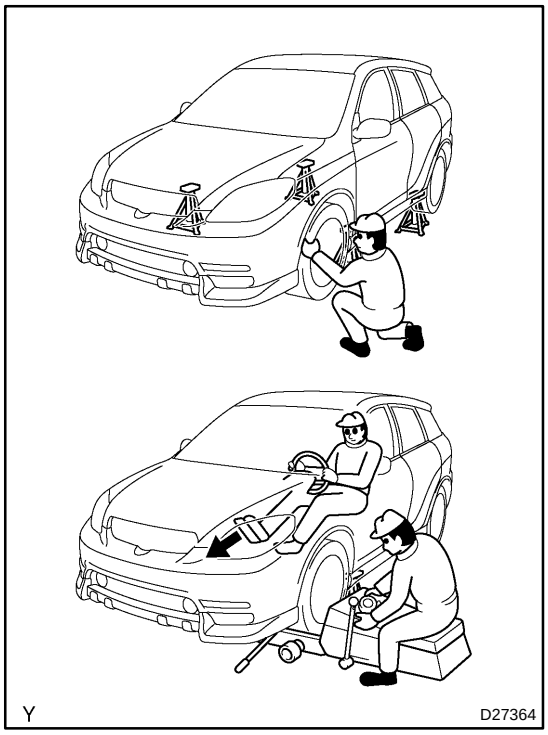

(d) ON–VEHICLE WHEEL BALANCING MEASUREMENT
When doing on–vehicle wheel balancing measurement on a full–time 4WD vehicle, to prevent the wheels from rotating at different speeds in different directions from each other (which could damage the center differential), always be sure to observe the following precautions:

(1) Jack up all the 4 wheels with a 2–post–type lift.
All the 4 wheels should be jacked up, clearing the ground completely.

(2) Fasten the vehicle by setting 2 pick–up stands in the bottom of the suspension arm's tip of the front wheels or rear wheels to be measured.

(3) Support the vehicle with safety stands so that the vehicle will not lean in the vehicle's front/rear direction.

(4) Release the parking brake.

(5) Check that no dragging force exists by turning each wheel by hand.

(6) Set the wheel balancers.

(7) Measurement should be performed by using both of the engine drive and wheel balancer roller drive.

NOTICE:

- **Start the engine, and then increase the vehicle speed gradually in the "D" range.**
- **Do not accelerate or decelerate suddenly.**
- **Deceleration should be performed by brake gradually.**
- **Take special care so that the vehicle will not move.**
- **Measurement should be performed quickly.**

9. WHEN TOWING FULL–TIME 4WD VEHICLES

- Use one of the methods shown below to tow a vehicle.
- When there is trouble with the chassis and drive train, use method 1(flat bed truck).
- Recommended method : No.1, No.2, No.3
  Emergency Method : No.4

Towing Method \ Conditions	Parking Brake	Transmission Shift Lever Position
”1” Flat Bed Truck 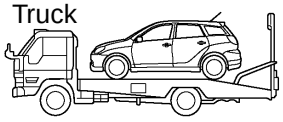	Applied	Any Position
”2” Wheel Lift Type Truck with Dollies –From Front 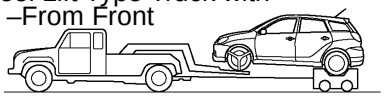		
”3” Wheel Lift Type Truck with Dollies–From Rear 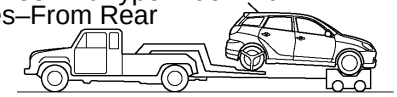		
”4” Towing with a Rope 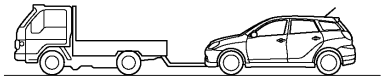	Released	N range

Y D27365

NOTICE:

Do not use any towing method other than those shown above.

- For example, the towing methods shown below are dangerous or damage the vehicle, and therefore do not use them.

NOTICE:

Towing a vehicle with the front wheels only or the rear wheels only held up might cause the drive train to be burned–out or the wheels to be flying off the dolly.

No 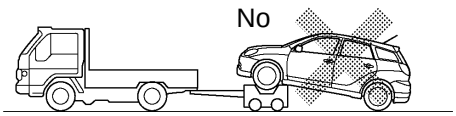	● In this towing method, there is a danger of the front wheels flying off the dolly.
No 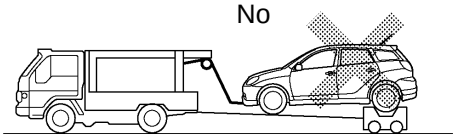	● Never perform towing under the condition that the lifted–up wheels cannot rotate.
No 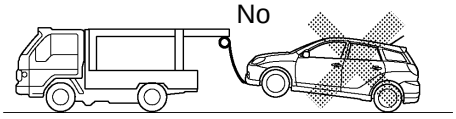	● Do not perform sling type towing, because this causes damage to the bumper, engine under cover, suspension lower arm bushing and air conditioning condenser.

10. FOR VEHICLES EQUIPPED WITH CATALYTIC CONVERTER

CAUTION:

If large amount of unburned gasoline flows into the converter, it may cause overheating and a fire hazard. To prevent this, observe the following precautions.

(a) Use only unleaded gasoline.

(b) Avoid prolonged idling.
Avoid running the engine at idle speed for more than 20 minutes.

(c) Avoid a spark jump test.
   (1) Perform a spark jump test only when absolutely necessary. Perform this test as rapidly as possible.
   (2) While testing, never race the engine.

(d) Avoid a prolonged engine compression measurement.
Engine compression measurements must be performed as rapidly as possible.

(e) Do not run the engine when the fuel tank is nearly empty. This may cause the engine to misfire and create an extra load on the converter.

01035–04

HOW TO PROCEED WITH TROUBLESHOOTING

HINT:

Carry out troubleshooting in accordance with the procedure on the following page. Here, only the basic procedure is shown. Details are provided in the Diagnostics section, showing the most effective methods for each circuit. Confirm the troubleshooting procedures first for the relevant circuit before beginning the troubleshooting of that circuit.

1	Vehicle brought to workshop

2	Customer problem analysis

(a) Ask the customer about the conditions and environment when the problem occurred.

3	Symptom confirmation and DTC (and freeze frame data) check

(a) Check the battery positive voltage.
Voltage: 10 – 14 V (Engine stopped)

(b) Visually check the wire harness, connectors and fuses for open and short, etc.

(c) Warm up the engine to the normal operating temperature.

(d) Confirm the problem symptoms and conditions, and check the DTCs according to the applicable chart.

OK → **Go to step 5**

NG

4	DTC chart

(a) Check the results obtained in step 3, then confirm the inspection procedure for the system or the part which should be checked using the DTC chart.

→ **Go to step 6**

5	Problem symptoms chart

(a) Check the results obtained in step 3, then confirm the inspection procedure for the system or the part which should be checked using the problem symptoms table.

6	Circuit inspection or parts inspection

(a) Confirm the circuit for the system or the part which should be checked using the problem symptoms table or the results obtained in step 4.

7	Repair

(a) Repair the affected system or part in accordance with the instructions in step 6.

8	Confirmation test

(a) After completing repairs, confirm that the problem has been solved.
(If the problem dose not reoccur, perform a confirmation test under the same conditions and in the same environment as when it occurred for the first time.)

END

CUSTOMER PROBLEM ANALYSIS

HINT:

- In troubleshooting, the problem symptoms must be confirmed accurately and all preconceptions must be cleared in order to give an accurate judgment. To ascertain what the problem symptoms are, it is extremely important to ask the customer about the problem and conditions when it occurred.
- The following 5 items are important points in the problem analysis. Past problems which are thought to be unrelated and the repair history, etc. may also help in some cases. So, as much information as possible should be gathered and its relationship with the problem symptoms should be correctly ascertained for a reference in troubleshooting. A customer problem analysis table is provided in Diagnostics section for each system for your use.

Important Points in the Customer Problem Analysis

- What ——— Vehicle model, system name
- When ——— Date, time, occurrence frequency
- Where ——— Road conditions
- Under what conditions? ——— Running conditions, driving conditions, weather conditions
- How did it happen? ——— Problem symptoms

(Sample) Supplemental restraint system check sheet.

CUSTOMER PROBLEM ANALYSIS CHECK

Supplemental Restraint System Check Sheet

Inspector's Name

Customer's Name		**Registration No.**	
		Registration Year	/ /
		Frame No.	
Date Vehicle Brought In	/ /	**Odometer Reading**	km miles

Date Problem First Occurred	/ /
Weather	☐ Fine ☐ Cloudy ☐ Rainy ☐ Snowy ☐ Other
Temperature	Approx.

Vehicle Operation	☐ Starting ☐ Idling ☐ Driving [☐ Constant speed ☐ Acceleration ☐ Deceleration ☐ Other]

SYMPTOM CONFIRMATION AND DIAGNOSTIC TROUBLE CODE

HINT:

- The diagnostic system in COROLLA MATRIX has various functions. The first function is the Diagnostic Trouble Code (DTC) Check in which a malfunction in the signal circuits to the ECU is stored in code form in the ECU memory. Another function is the Input Signal Check which checks if the signals from various switches are sent to the ECU correctly. By using these check functions, possible areas of the problem can be narrowed down quickly and troubleshooting can be performed effectively. Diagnostic functions are incorporated in the following systems in COROLLA MATRIX.

System	Diagnostic Trouble Code Check	Input Signal Check (Sensor Check)	Diagnostic Test Mode (Active Test)
SFI System	○ (with Check Mode)	○	○
ABS with EBD System	○	○	
Electronic Controlled Automatic Transaxle [ECT]	○ (with Check Mode)	○	
Supplemental Restraint System	○		
Cruise Control System		○	

- In the DTC check, it is very important to determine whether the problem indicated by the DTC is still occurring or has occurred in the past but returned to normal at present. In addition, it must be checked in the problem symptom check whether the malfunction indicated by the DTC is directly related to the problem symptom or not. For this reason, the DTC should be checked before and after the symptom confirmation to determine the current conditions. If this is not done, it may, depending on the case, result in unnecessary troubleshooting for normally operating systems, making it more difficult to detect the problem area, or trying to repair irrelevant areas. Therefore always follow the procedure in the correct order and perform the DTC check.
- A flow chart showing how to proceed with the troubleshooting using the diagnostic trouble code (DTC) check is shown below. This flow chart shows how to utilize the DTC check effectively. Then, by carefully checking the results, this chart indicates how to proceed either to the DTC troubleshooting or to the troubleshooting of problem symptoms table.

1 DTC check

2 Making a note and clear the DTCs

3 Symptom confirmation

○	Problem symptoms exist
○	No problem symptoms exist

a → **Go to step 5**

b

4 Simulation test using the symptom simulation methods

5 DTC check

	DTC displayed
	Normal code displayed

a → **Troubleshooting of problem indicated by DTC**

b

6 Symptom confirmation

	No problem symptoms exist
	Problem symptoms exist

If a DTC is displayed in the initial DTC check, it indicates that a trouble may have occurred in a wire harness or connector in that circuit in the past, therefore check the wire harness and connectors (See page 01–34).

a → **System normal**

b

Troubleshooting of each problem symptom

The problem is still occurring in a place other than the diagnostic circuit (The DTC displayed first is either for a past problem or it is a secondary problem).

SYMPTOM SIMULATION

HINT:

The most difficult case in troubleshooting is when no problem symptoms occurs. In such cases, a thorough customer problem analysis must be carried out. Then simulate the same or similar conditions and environment in which the problem occurred in the customer's vehicle. No matter how much experience a technician has, or how skilled he may be, if he proceeds to troubleshoot without confirming the problem symptoms, he will tend to overlook something important in the repair operation and make a wrong guess somewhere, which will only lead to a standstill. For example, for a problem which only occurs when the engine is cold, or for a problem which occurs due to vibration caused by the road during driving, etc., the problem can never be determined with the engine hot condition or the vehicle at a standstill. Since vibration, heat or water penetration (moisture) is a likely cause for the problem which is difficult to reproduce, the symptom simulation tests introduced here are effective measures to a point that the external causes are applied to the vehicle in a stationary condition.

Important points in the symptom simulation test:

In the symptom simulation test, the problem symptoms should be confirmed, and the problem area or parts must also be found out. To do so, narrow down the possible problem circuits according to the symptoms before starting this test and have a hand–held tester connected beforehand. After that, carry out the symptom simulation test, judging whether the circuit being tested is defective or normal and also confirming the problem symptoms at the same time. Refer to the problem symptoms table of each system to narrow down the possible causes of the symptom.

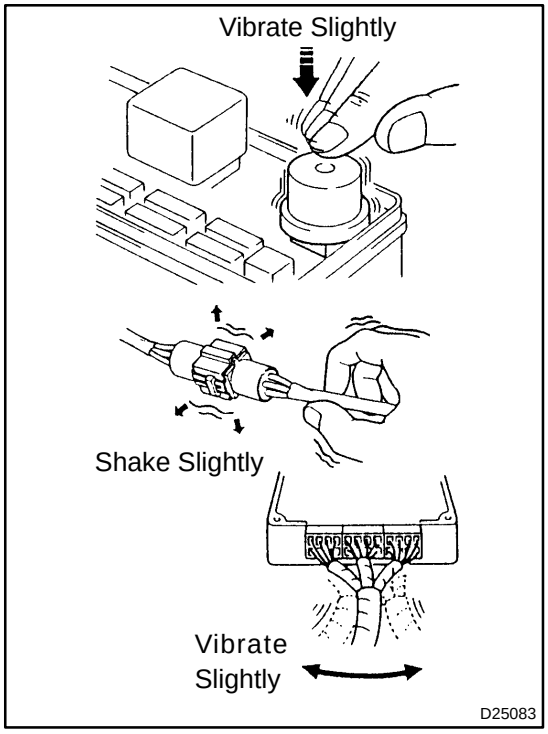

1. VIBRATION METHOD: When vibration seems to be the major cause.

(a) PART AND SENSOR

(1) Apply slight vibration with a finger to the part of the sensor considered to be the problem cause and check that the malfunction occurs.

HINT:

Applying strong vibration to relays may result in open relays.

(b) CONNECTORS

(1) Slightly shake the connector vertically and horizontally.

(c) WIRE HARNESS

(1) Slightly shake the wire harness vertically and horizontally.

The connector joint and fulcrum of the vibration are the major areas to be checked thoroughly.

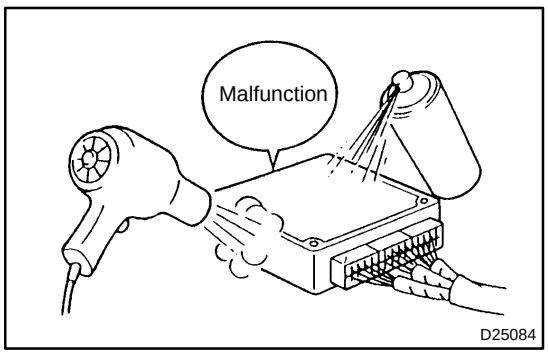

2. HEAT METHOD: When the problem seems to occur when the suspect area is heated.

(a) Heat the component that is the possible cause of the malfunction with a hair dryer or similar object. Check if the malfunction occurs.

NOTICE:

- **Do not heat to more than 60°C (140°F) (Temperature is limited so as not to damage the components).**
- **Do not apply heat directly to the parts in the ECU.**

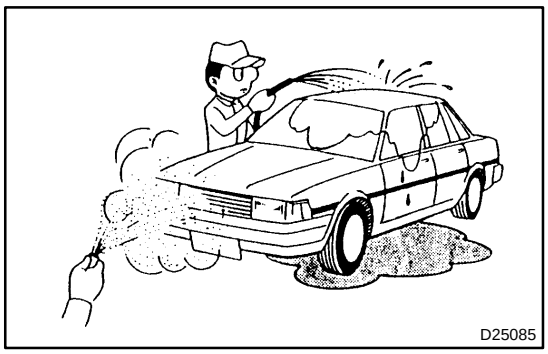

3. WATER SPRINKLING METHOD: When the malfunction seems to occur on a rainy day or in a high–humidity condition.

(a) Sprinkle water onto the vehicle and check if the malfunction occurs.

NOTICE:

- **Never sprinkle water directly onto the engine compartment, but indirectly change the temperature and humidity by applying water spray onto the radiator front surface.**
- **Never apply water directly onto the electronic components.**

HINT:

If a vehicle is subject to water leakage, the leaked water may contaminate the ECU. When testing a vehicle with a water leakage problem, special caution must be taken.

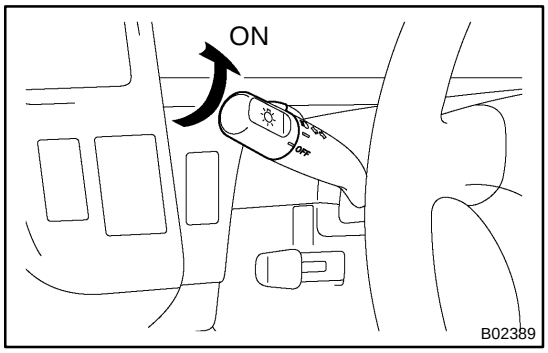

4. OTHERS: When the malfunction seems to occur when electrical load is excessive.

(a) Turn on all the electrical loads including the heater blower, headlights, rear window defogger, etc., and check if the malfunction occurs.

DIAGNOSTIC TROUBLE CODE CHART

The inspection procedure is shown in the table below. This table permits an efficient and accurate troubleshooting using the diagnostic trouble codes displayed in the diagnostic trouble code check. Proceed with troubleshooting in accordance with the inspection procedure given in the diagnostic chart corresponding to the diagnostic trouble codes displayed. The Supplemental Restraint System diagnostic trouble code chart is shown below as an example.

- DTC No.
  Indicates the diagnostic trouble code.
- Page or Instructions
  Indicates the page where the inspection procedure for each circuit is to be found, or gives instructions for checking and repairs.

- Trouble Area
  Indicates the suspect area of the problem.

- Detection Item
  Indicates the system of the problem or contents of the problem.

DIAGNOSTIC TROUBLE CODE CHART

If a malfunction code is displayed during the DTC check, check the circuit for that code listed in the table below (Proceed to the page given for that circuit).

DTC No. (See page)	Detection Item	Trouble Area	SRS Warming Light
B0100/13 (05–119)	● Short in D squib circuit	● Steering wheel pad (squib) ● Spiral cable ● Airbag sensor assembly ● Wire harness	ON
B0101/14 (05–124)	● Open in D squib circuit	● Steering wheel pad (squib) ● Spiral cable ● Airbag sensor assembly ● Wire harness	ON
B0102/11 (05–128)	● Short in D squib circuit (to ground)	● Steering wheel pad (squib) ● Spiral cable ● Airbag sensor assembly ● Wire harness	ON
B0103/12 (05–132)	● Short in D squib circuit (to B+)	● Steering wheel pad (squib) ● Spiral cable ● Airbag sensor assembly ● Wire harness	ON
B0105/53 (05–136)	● Short in P squib circuit	● Front passenger airbag assembly (squib) ● Airbag sensor assembly ● Wire harness	ON
B0106/54	● Open in P squib circuit	● Front passenger airbag assembly (squib) ● Airbag sensor assembly ● Wire harness	
	b circuit (to Ground)	● Front passenger airbag assembly (squib) ● Airbag sensor assembly ● Wire harness	

PROBLEM SYMPTOMS TABLE

The suspected circuits or parts for each problem symptom are shown in the table below. Use this table to troubleshoot the problem when a ”Normal” code is displayed in the diagnostic trouble code check but the problem is still occurring. Numbers in the table indicate the inspection order in which the circuits or parts should be checked.

HINT:

When the problem is not detected by the diagnostic system even though the problem symptom is present, it is considered that the problem is occurring outside the detection range of the diagnostic system, or that the problem is occurring in a system other than the diagnostic system.

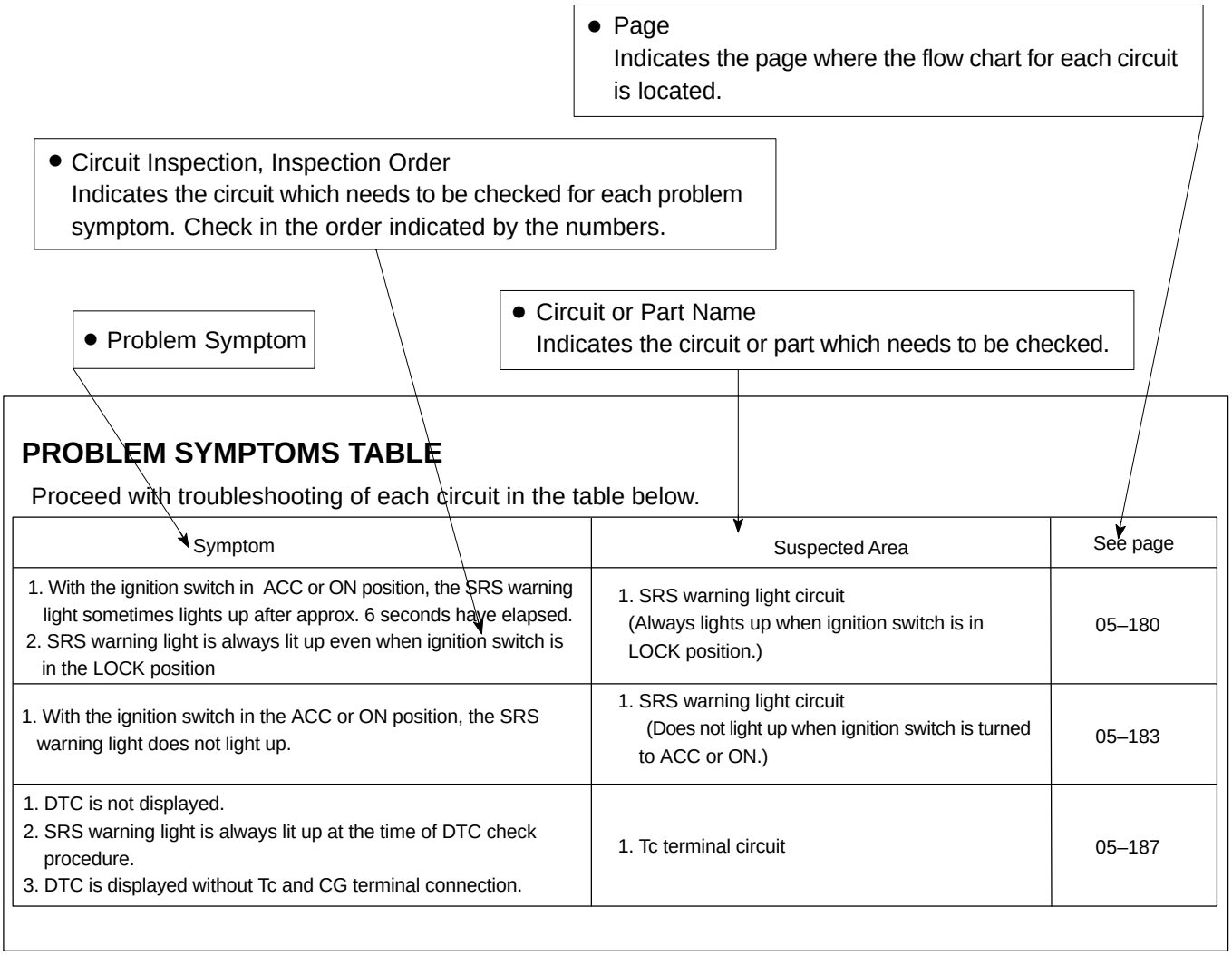

CIRCUIT INSPECTION

How to read and use each page is shown below.

● Circuit Description
The major role and operation, etc. of the circuit and its component parts are explained.

● Diagnostic Trouble Code No. and Detection Item

● Indicates the diagnostic trouble code, diagnostic trouble code set parameter and suspect area of the problem.

● Inspection Procedure
Use the inspection procedure to determine if the circuit is normal or abnormal, and if it is abnormal, use it to determine whether the problem is located in the sensors, actuators, wire harness or ECU.

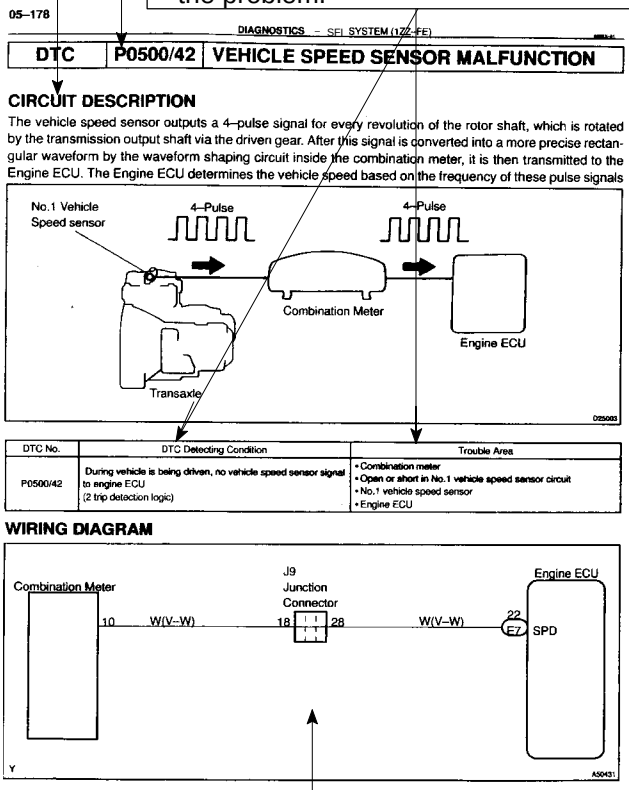

05–178

DIAGNOSTICS – SFI SYSTEM (1ZZ–FE)

DTC P0500/42 VEHICLE SPEED SENSOR MALFUNCTION

CIRCUIT DESCRIPTION

The vehicle speed sensor outputs a 4–pulse signal for every revolution of the rotor shaft, which is rotated by the transmission output shaft via the driven gear. After this signal is converted into a more precise rectangular waveform by the waveform shaping circuit inside the combination meter, it is then transmitted to the Engine ECU. The Engine ECU determines the vehicle speed based on the frequency of these pulse signals

DTC No.	DTC Detecting Condition	Trouble Area
P0500/42	During vehicle is being driven, no vehicle speed sensor signal to engine ECU (2 trip detection logic)	• Combination meter • Open or short in No.1 vehicle speed sensor circuit • No.1 vehicle speed sensor • Engine ECU

WIRING DIAGRAM

05–179

DIAGNOSTICS – SFI SYSTEM (1ZZ–FE)

INSPECTION PROCEDURE

1 READ VALUE OF VEHICLE SPEED VALUE(SPEEDOMETER OPERATION)

(a) Select data monitor on the hand–held tester.
(b) Perform a test drive of the vehicle.
(c) Read the vehicle speed on the hand–held tester.
RESULT: The same as the speed displayed on the speed meter.

NG → **REPLACE COMBINATION METER ASSY**

OK

2 INSPECT ECU

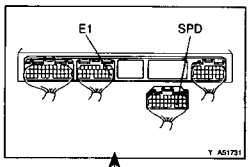

(a) Check the output waveform.
HINT:
Using the oscilloscope function of hand–held tester, it is possible to check the function between the engine ECU and the knock control sensor. The waveform shown in the illustration is an example without noise and chattering.
(1) Connect the hand–held tester between the terminals SPD of the engine ECU E7 connector and E1 of the engine ECU E8 connector.
(2) Select the oscilloscope function on the hand–held tester. (Refer to the hand–held tester's instruction book for operating instructions.)

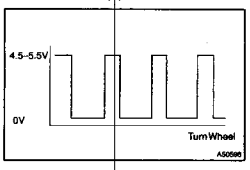

RESULT: Voltage is intermittently generated

ITEM	CONTENTS
TERMINAL	SPD⇔E1
EQUIPMENT SET	5V/DIV, 20ms/DIV
CONDITION	Running at 20 km/h

HINT:
• The multitude gets shorter as the engine speed becomes faster.

OK → **CHECK AND REPLACE ECU**

NG

● Wiring Diagram
This shows a wiring diagram of the circuit.
Use this diagram together with ELECTRICAL WIRING DIAGRAM to thoroughly understand the circuit.
Wire colors are indicated by an alphabetical code.
B = Black, L = Blue, R = Red, BR = Brown,
LG = Light Green, V = Violet, G = Green,
O = Orange, W = White, GR = Gray, P = Pink,
Y = Yellow, SB = Sky Blue
The first letter indicates the basic wire color and the second letter indicates the color of the stripe.

● Indicates the condition of the connector of ECU during the check.

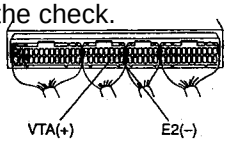

Connector being checked is connected.

Connections of tester are indicated by (+), (–) after terminals name.

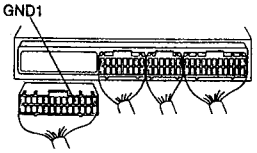

Connector being checked is disconnected.

On inspection with body ground side is not specified.

D25842

01036–03

ELECTRONIC CIRCUIT INSPECTION PROCEDURE

1. BASIC INSPECTION

(a) RESISTANCE MEASURING CONDITION OF ELECTRONIC PARTS

(1) Unless stated, all resistance is measured at an ambient temperature of 20°C (68°F). Because the resistance may be outside the specifications if measured at high temperatures immediately after the vehicle has been running, measurements should be made when the engine has cooled down.

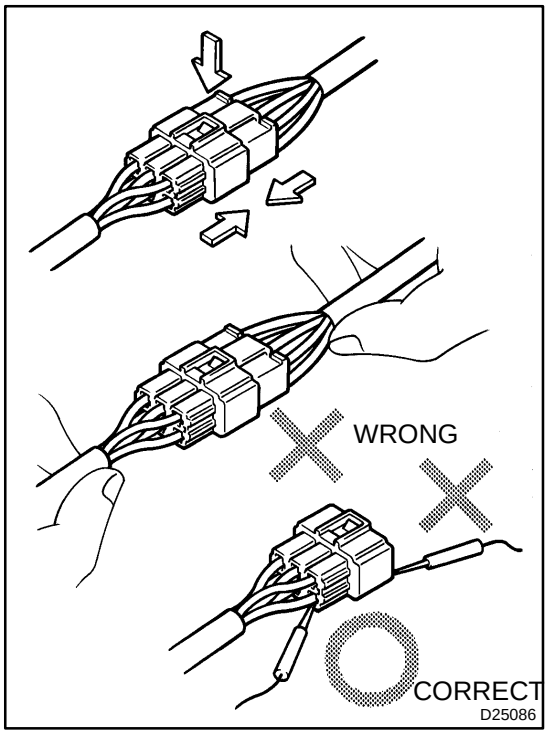

(b) HANDLING OF CONNECTOR

(1) When removing the connector with a lock, press the connector toward the engagement and remove the lock by making the lock claw movable easily.

(2) When removing the connector, do not hold the harness, but hold the connector.

(3) Before connecting the connector, check that there are no deformation, damage and missing of the terminals.

(4) Connection of the connector with a lock should be securely done until it makes a click sound.

(5) In case of checking the connector with a Toyota electrical tester, perform it at the back side (harness side) of the connector using a mini test lead.

NOTICE:

- **As a water proof connector cannot be checked from its back side, check by connecting the sub–harness.**
- **Do not damage the terminals by moving the inserted tester needle.**

(c) CONNECTOR CHECKING POINTS

(1) Checking when the connector is connected:
By holding the connector, check the inserted condition and locking efficiency (engaged condition).

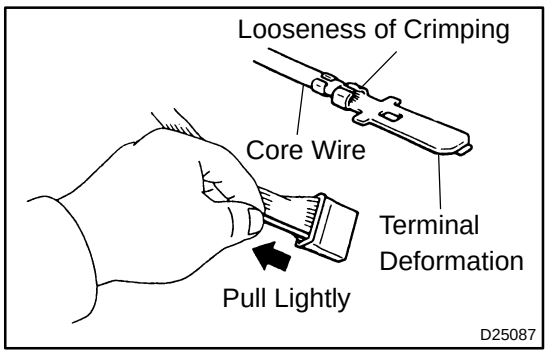

(2) Checking when the connector is removed:
Check by pulling the wire harness lightly (missing terminal, terminal crimping condition, core wire break).
Check visually if there is any rust, metal tip, water and bend of terminal (rust, mixing of foreign object, terminal deformation).

NOTICE:

When testing a gold–plated female terminal, always use a gold–plated male terminal.

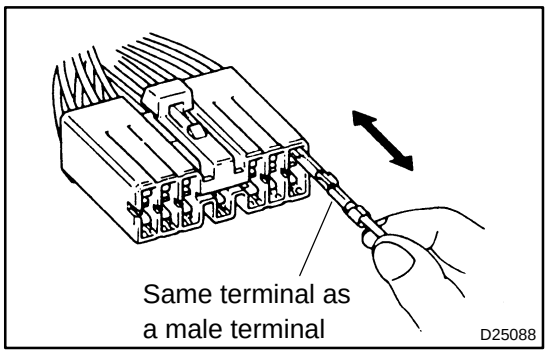

(3) Checking of the contact pressure of the terminal:
Prepare the same terminal as a male terminal.
By inserting it to a female terminal, check the engaged condition and sliding load.

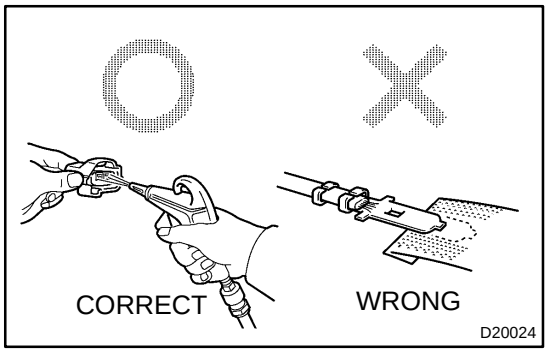

(d) REPAIR METHOD OF CONNECTOR TERMINAL

(1) In case that there is any soil at the contact point, clean the contact point using an air gun or shop rag. At this time, never polish the contact point using a sand paper as the platings may come off.

(2) In case of abnormal contact pressure, replace the female terminal. At this time, if a male terminal is gold–plated (gold color), use gold–plated female terminals and if it is silver–plated (silver color), use silver–plated female terminals.

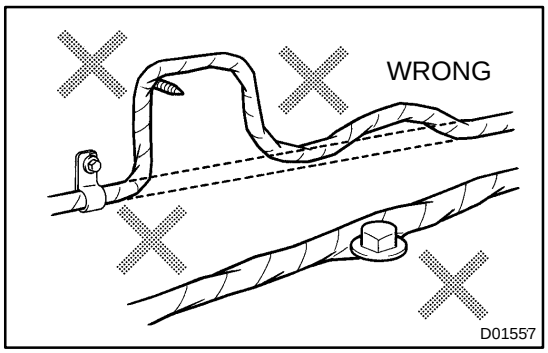

(e) HANDLING OF WIRE HARNESS

(1) In case of removing the wire harness, check the wiring and clamping condition before the work so as to restore it correctly.

(2) Never twist, pull or slack off the wire harness more than necessary.

(3) Never make the wire harness come into contact with a high–temperature part, rotating, moving, vibrating or acute–angled part (edge of the panel, tip of the screw, etc.).

(4) When installing parts, never sandwich the wire harness between them.

(5) Never cut or break the cover of the wire harness. If it is cut or broken, replace it or securely repair it with a vinyl tape.

Fig. 1

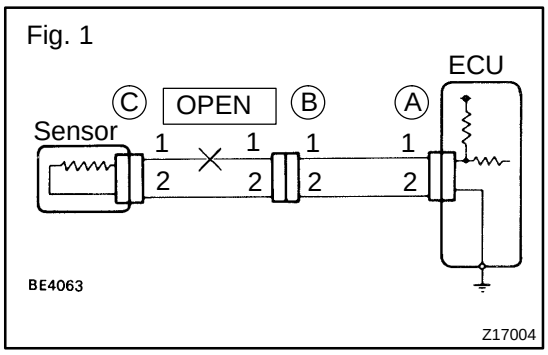

2. CHECK OPEN CIRCUIT

(a) For the open circuit in the wire harness in Fig. 1, perform "(b) Check the continuity" or "(c) Check the voltage" to locate the section.

Fig. 2

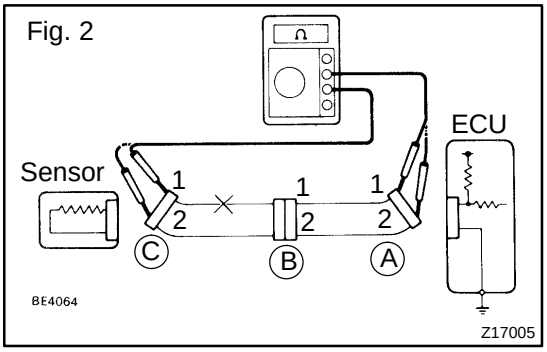

(b) Check the continuity.

(1) Disconnect connectors ”A” and ”C” and measure the resistance between them.

Resistance: 1 Ω or less

HINT:

Measure the resistance while lightly shaking the wire harness vertically and horizontally.

In the case of Fig. 2:

Between terminal 1 of connector ”A” and terminal 1 of connector ”C” → No continuity (open)

Between terminal 2 of connector ”A” and terminal 2 of connector ”C” → Continuity

Therefore, it is found out that there is an open circuit between terminal 1 of connector ”A” and terminal 1 of connector ”C”.

Fig. 3

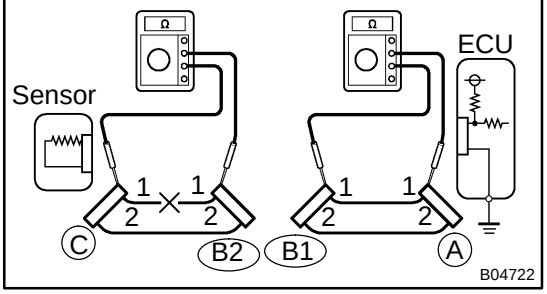

(2) Disconnect connector ”B” and measure the resistance between the connectors.

In the case of Fig. 3:

Between terminal 1 of connector ”A” and terminal 1 of connector ”B1” → Continuity

Between terminal 1 of connector ”B2” and terminal 1 of connector ”C” → No continuity (open)

Therefore, it is found out that there is an open circuit between terminal 1 of connector ”B2” and terminal 1 of connector ”C”.

Fig. 4

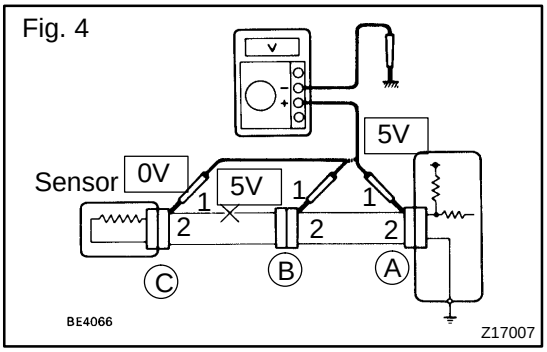

(c) Check the voltage.

(1) In a circuit in which voltage is applied (to the ECU connector terminal), an open circuit can be checked by conducting a voltage check.

As shown in Fig. 4, with each connector still connected, measure the voltage between the body ground and terminal 1 of connector ”A” at the ECU 5 V output terminal, terminal 1 of connector ”B”, and terminal 1 of connector ”C”, in that order.

(2) If the results are:

5 V: Between terminal 1 of connector ”a” and body ground

5 V: Between terminal 1 of connector ”b” and body ground

0 V: Between terminal 1 of connector ”c” and body ground

Then it is found out that there is an open circuit in the wire harness between terminal 1 of ”B” and terminal 1 of ”C”.

Fig. 5

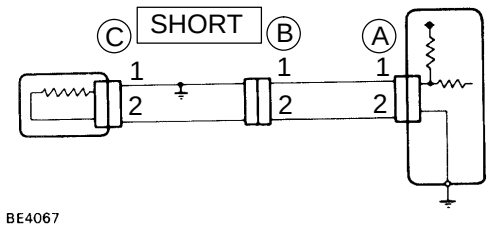

3. CHECK SHORT CIRCUIT

(a) If the wire harness is ground shorted as in Fig. 5, locate the section by conducting a ”continuity check with the body ground”.

Fig. 6

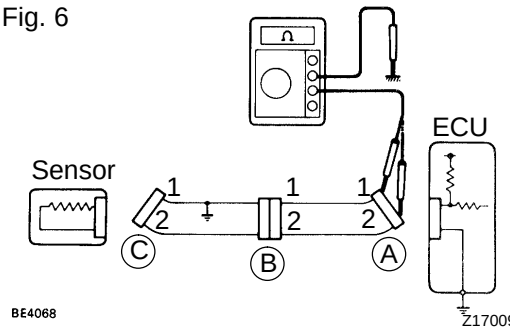

(b) Check the continuity with the body ground.

(1) Disconnect connectors ”A” and ”C” and measure the resistance between terminal 1 and 2 of connector ”A” and the body ground.

Resistance: 1 MΩ or higher

HINT:

Measure the resistance while lightly shaking the wire harness vertically and horizontally.

In the case of Fig. 6:

Between terminal 1 of connector ”A” and body ground → Continuity (short)

Between terminal 2 of connector ”A” and body ground → No continuity

Therefore, it is found out that there is a short circuit between terminal 1 of connector ”A” and terminal 1 of connector ”C”.

Fig. 7

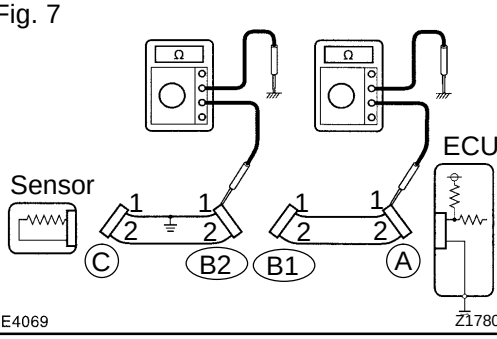

(2) Disconnect connector ”B” and measure the resistance between terminal 1 of connector ”A” and the body ground, and terminal 1 of connector ”B2” and the body ground.

In the case of Fig. 7:

Between terminal 1 of connector ”A” and body ground → No continuity

Between terminal 1 of connector ”B2” and body ground → Continuity (short)

Therefore, it is found out that there is a short circuit between terminal 1 of connector ”B2” and terminal 1 of connector ”C”.

4. CHECK AND REPLACE ECU

NOTICE:

- **Start an inspection of the connector from the backside of the connector at the wire harness side with the connector connected to the ECU.**
- **When no measuring condition is specified, perform the inspection with the engine stopped and also the ignition switched ON.**

(a) First check the ECU ground circuit. If it is faulty, repair it. If it is normal, the ECU could be faulty. So, replace the ECU with a normal functioning one and check if the symptoms appear.

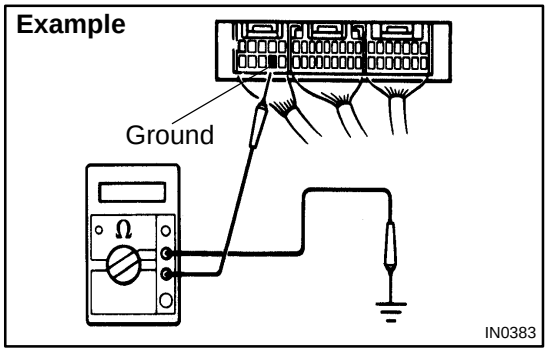

(1) Measure the resistance between the ECU ground terminal and body ground.

Resistance: 1 Ω or less

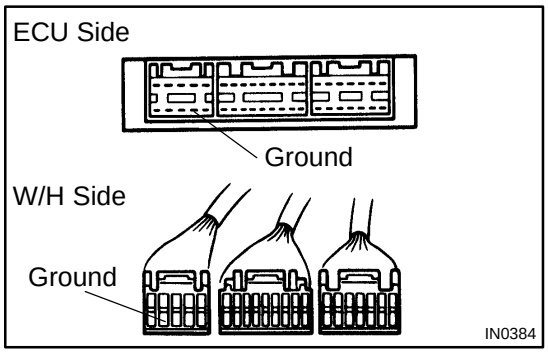

(2) Disconnect the ECU connector, check the ground terminals on the ECU side and wire harness side for bend and check the contact pressure.

HOW TO TROUBLESHOOT ECU CONTROLLED SYSTEMS

01034–04

GENERAL INFORMATION

A large number of ECU controlled systems are used in this vehicle. In general, the ECU controlled system is considered to be a very intricate system requiring high level of technical knowledge and expert skill to troubleshoot. The fact is, however, that if you proceed to inspect the circuits one by one, troubleshooting of these systems is not complex. If you have adequate understanding of the system and basic knowledge of electricity, accurate diagnosis and necessary repair can be performed to locate and fix the problem. This manual is designed through emphasis of the above standpoint to help service technicians perform an accurate and effective troubleshooting, and is compiled for the following major ECU controlled systems.
The troubleshooting procedure and how to make use of it are described on the following pages.

System	Page
1. SFI System (1ZZ–FE)	05–1
2. SFI System (2ZZ–GE)	05–153
3. ABS with EBD System	05–313
4. Electronic Controlled Automatic Transaxle [ECT] (A246E)	05–371
5. Electronic Controlled Automatic Transaxle [ECT] (U240E)	05–419
6. Electronic Controlled Automatic Transaxle [ECT] (U341F)	05–484
7. Supplemental Restraint System	05–540
8. Audio System	05–712
9. Navigation System	05–749
10.Combination Meter	05–814
11.Power Door Lock Control System	05–844
12.Wireless Door Lock Control System	05–859
13.TOYOTA Vehicle Intrusion Protection System	05–874
14.Cruise Control System	05–916

FOR USING OBDII SCAN TOOL OR HAND–HELD TESTER

HINT:

- Before using the scan tool or tester, the scan tool's instruction book or tester's operator manual should be read thoroughly.
- If the scan tool or tester cannot communicate with the ECU controlled systems when you have connected the cable of the scan tool or tester to the DLC3, turned the ignition switch ON and operated the scan tool, there is a problem on the vehicle side or tool side.
  (1) If the communication is normal when the tester is connected to another vehicle, inspect the diagnosis data link line (Bus⊕line) or ECU power circuit of the vehicle.
  (2) If the communication is still impossible when the tester is connected to another vehicle, the problem is probably in the tester itself, so perform the Self Test procedures outlined in the Tester Operator's Manual.

TERMS

01037–03

ABBREVIATIONS USED IN THIS MANUAL

Abbreviations	Meaning
ABS	Anti–Lock Brake System
AC	Alternating Current
ACC	Accessory
ACIS	Acoustic Control Induction System
ACSD	Automatic Cold Start Device
A.D.D.	Automatic Disconnecting Differential
A/F	Air–Fuel Ratio
AHC	Active Height Control Suspension
ALR	Automatic Locking Retractor
ALT	Alternator
AMP	Amplifier
ANT	Antenna
APPROX.	Approximately
ASSY	Assembly
A/T, ATM	Automatic Transmission (Transaxle)
ATF	Automatic Transmission Fluid
AUTO	Automatic
AUX	Auxiliary
AVG	Average
AVS	Adaptive Variable Suspension
B+	Battery Voltage
BA	Brake Assist
BACS	Boost Altitude Compensation System
BAT	Battery
BDC	Bottom Dead Center
B/L	Bi–Level
B/S	Bore–Stroke Ratio
BTDC	Before Top Dead Center
BVSV	Bimetallic Vacuum Switching Valve
Calif.	California
CB	Circuit Breaker
CCo	Catalytic Converter For Oxidation
CD	Compact Disc
CF	Cornering Force
CG	Center Of Gravity
CH	Channel
COMB.	Combination
CPE	Coupe
CPS	Combustion Pressure Sensor
CPU	Central Processing Unit
CRS	Child Restraint System
CTR	Center
C/V	Check Valve
CV	Control Valve
CW	Curb Weight
DC	Direct Current
DEF	Defogger
DFL	Deflector

Abbreviations	Meaning
DIFF.	Differential
DIFF. LOCK	Differential Lock
D/INJ	Direct Injection
DLC	Data Link Connector
DLI	Distributorless Ignition
DOHC	Double Overhead Camshaft
DP	Dash Pot
DS	Dead Soak
DSP	Digital Signal Processor
DTC	Diagnostic Trouble Code
DVD	Digital Versatible Disc
EBD	Electric Brake Force Distribution
ECAM	Engine Control And Measurement System
ECD	Electronic Controlled Diesel
ECDY	Eddy Current Dynamometer
ECU	Electronic Control Unit
ED	Electro–Deposited Coating
EDU	Electronic Driving Unit
EDIC	Electric Diesel Injection Control
EFI	Electronic Fuel Injection
E/G	Engine
EGR	Exhaust Gas Recirculation
EGR–VM	EGR–Vacuum Modulator
ELR	Emergency Locking Retractor
EMPS	Electric Motor Power Steering
ENG	Engine
ESA	Electronic Spark Advance
ETCS–i	Electronic Throttle Control System–intelligent
EVAP	Evaporative Emission Control
EVP	Evaporator
E–VRV	Electric Vacuum Regulating Valve
EX, EXH	Exhaust
FE	Fuel Economy
FF	Front–Engine Front–Wheel–Drive
F/G	Fuel Gauge
FIPG	Formed In Place Gasket
FL	Fusible Link
F/P	Fuel Pump
FPU	Fuel Pressure Up
Fr	Front
FR	Front–Engine Rear–Wheel–Drive
F/W	Flywheel
FW/D	Flywheel Damper
FWD	Front–Wheel–Drive
GAS	Gasoline
GND	Ground
GPS	Global Positioning System
HAC	High Altitude Compensator
H/B	Hatchback
H–FUSE	High Current Fuse
HI	High

Abbreviations	Meaning
HID	High Intensity Discharge (Head Lamp)
HPU	Hydraulic Power Unit
HSG	Housing
HT	Hard Top
HWS	Heated Windshield System
IAC	Idle Air Control
IC	Integrated Circuit
IDI	Indirect Diesel Injection
IFS	Independent Front Suspension
IG	Ignition
IIA	Integrated Ignition Assembly
IN	Intake (Manifold, Valve)
INT	Intermittent
I/P	Instrument Panel
IRS	Independent Rear Suspension
ISC	Idle Speed Control
J/B	Junction Block
J/C	Junction Connector
KD	Kick–Down
LAN	Local Area Network
LB	Liftback
LCD	Liquid Crystal Display
LED	Light Emitting Diode
LH	Left–Hand
LHD	Left–Hand Drive
L/H/W	Length, Height, Width
LLC	Long–Life Coolant
LNG	Liquified Natural Gas
LO	Low
LPG	Liquified Petroleum Gas
LSD	Limited Slip Differential
LSP & PV	Load Sensing Proportioning And Bypass Valve
LSPV	Load Sensing Proportioning Valve
MAP	Manifold Absolute Pressure
MAX.	Maximum
M–FUSE	Medium Current Fuse
MIC	Microphone
MIL	Malfunction Indicator Lamp
MIN.	Minimum
MG1	Motor Generator No.1
MG2	Motor Generator No.2
MP	Multipurpose
MPI	Multipoint Electronic Injection
MPX	Multiplex Communication System
M/T, MTM	Manual Transmission (Transaxle)
MT	Mount
MTG	Mounting
N	Neutral
NA	Natural Aspiration
No.	Number
O/D	Overdrive

Abbreviations	Meaning
OEM	Original Equipment Manufacturing
OHC	Overhead Camshaft
OHV	Overhead Valve
OPT	Option
ORVR	On–board Refilling Vapor Recovery
O/S	Oversize
P & BV	Proportioning And Bypass Valve
PCS	Power Control System
PCV	Positive Crankcase Ventilation
PKB	Parking Brake
PPS	Progressive Power Steering
PS	Power Steering
PTO	Power Take–Off
P/W	Power Window
R & P	Rack And Pinion
RAM	Random Access Memory
R/B	Relay Block
RBS	Recirculating Ball Type Steering
R/F	Reinforcement
RFS	Rigid Rear Suspension
RH	Right–Hand
RHD	Right–Hand Drive
RLY	Relay
ROM	Read Only Memory
Rr	Rear
RR	Rear–Engine Rear–Wheel–Drive
RRS	Rigid Rear Suspension
RWD	Rear–Wheel–Drive
SDN	Sedan
SEN	Sensor
SICS	Starting Injection Control System
SMT	Sequential Manual Transmission
SOC	State Of Charge
SOHC	Single Overhead Camshaft
SPEC	Specification
SPI	Single Point Injection
SRS	Supplemental Restraint System
SSM	Special Service Materials
SST	Special Service Tools
STD	Standard
STJ	Cold–Start Fuel Injection
SW	Switch
SYS	System
T/A	Transaxle
TACH	Tachometer
TBI	Throttle Body Electronic Fuel Injection
TC	Turbocharger
TCCS	TOYOTA Computer–Controlled System
TCV	Timing Control Valve
TDC	Top Dead Center
TEMP.	Temperature

Abbreviations	Meaning
TEMS	TOYOTA Electronic Modulated Suspension
TFT	Toyota Free–Tronic
TIS	Total Information System For Vehicle Development
T/M	Transmission
TMC	TOYOTA Motor Corporation
TMMK	TOYOTA Motor Manufacturing Kentucky, Inc.
TRAC	Traction Control System
TURBO	Turbocharge
TWC	Three–Way Catalyst
TVIP	TOYOYA Vehicle Intrusion Protection
U/D	Underdrive
U/S	Undersize
VCV	Vacuum Control Valve
VENT	Ventilator
VIN	Vehicle Identification Number
VPS	Variable Power Steering
VSC	Vehicle Stability Control
VSV	Vacuum Switching Valve
VTV	Vacuum Transmitting Valve
VVT–i	Variable Valve Timing–intelligent
w/	With
WGN	Wagon
W/H	Wire Harness
w/o	Without
WU–TWC	Warm Up Three–way Catalytic Converter
WU–OC	Warm Up Oxidation Catalytic Converter
1st	First
2nd	Second
2WD	Two Wheel Drive Vehicle (4 x 2)
3rd	Third
4th	Fourth
4WD	Four Wheel Drive Vehicle (4 x 4)
4WS	Four Wheel Steering System
5th	Fifth

010DT–01

GLOSSARY OF SAE AND TOYOTA TERMS

This glossary lists all SAE–J1930 terms and abbreviations used in this manual in compliance with SAE recommendations, as well as their TOYOTA equivalents.

SAE ABBREVIATIONS	SAE TERMS	TOYOTA TERMS ( )—ABBREVIATIONS
A/C	Air Conditioning	Air Conditioner
ACL	Air Cleaner	Air Cleaner, A/CL
AIR	Secondary Air Injection	Air Injection (AI)
AP	Accelerator Pedal	–
B+	Battery Positive Voltage	+B, Battery Voltage
BARO	Barometric Pressure	HAC
CAC	Charge Air Cooler	Intercooler
CARB	Carburettor	Carburettor
CFI	Continuous Fuel Injection	–
CKP	Crankshaft Position	Crank Angle
CL	Closed Loop	Closed Loop
CMP	Camshaft Position	Cam Angle
CPP	Clutch Pedal Position	–
CTOX	Continuous Trap Oxidizer	–
CTP	Closed Throttle Position	LL ON, Idle ON
DFI	Direct Fuel Injection (Diesel)	Direct Injection (DI)
DI	Distributor Ignition	–
DLC1 DLC2 DLC3	Data Link Connector 1 Data Link Connector 2 Data Link Connector 3	1: Check Connector 2: Total Diagnosis Communication Link (TDCL) 3: OBD II Diagnostic Connector
DTC	Diagnostic Trouble Code	Diagnostic Trouble Code
DTM	Diagnostic Test Mode	–
ECL	Engine Control Level	–
ECM	Engine Control Module	Engine ECU (Electronic Control Unit)
ECT	Engine Coolant Temperature	Coolant Temperature, Water Temperature (THW)
EEPROM	Electrically Erasable Programmable Read Only Memory	Electrically Erasable Programmable Read Only Memory (EEPROM), Erasable Programmable Read Only Memory (EPROM)
EFE	Early Fuel Evaporation	Cold Mixture Heater (CMH), Heat Control Valve (HCV)
EGR	Exhaust Gas Recirculation	Exhaust Gas Recirculation (EGR)
EI	Electronic Ignition	TOYOTA Distributorless Ignition (TDI)
EM	Engine Modification	Engine Modification (EM)
EPROM	Erasable Programmable Read Only Memory	Programmable Read Only Memory (PROM)
EVAP	Evaporative Emission	Evaporative Emission Control (EVAP)
FC	Fan Control	–
FEEPROM	Flash Electrically Erasable Programmable Read Only Memory	–
FEPROM	Flash Erasable Programmable Read Only Memory	–
FF	Flexible Fuel	–
FP	Fuel Pump	Fuel Pump
GEN	Generator	Alternator
GND	Ground	Ground (GND)

HO2S	Heated Oxygen Sensor	Heated Oxygen Sensor (HO_2S)
IAC	Idle Air Control	Idle Speed Control (ISC)
IAT	Intake Air Temperature	Intake or Inlet Air Temperature
ICM	Ignition Control Module	–
IFI	Indirect Fuel Injection	Indirect Injection (IDL)
IFS	Inertia Fuel–Shutoff	–
ISC	Idle Speed Control	–
KS	Knock Sensor	Knock Sensor
MAF	Mass Air Flow	Air Flow Meter
MAP	Manifold Absolute Pressure	Manifold Pressure Intake Vacuum
MC	Mixture Control	Electric Bleed Air Control Valve (EBCV) Mixture Control Valve (MCV) Electric Air Control Valve (EACV)
MDP	Manifold Differential Pressure	–
MFI	Multiport Fuel Injection	Electronic Fuel Injection (EFI)
MIL	Malfunction Indicator Lamp	Check Engine Lamp
MST	Manifold Surface Temperature	–
MVZ	Manifold Vacuum Zone	–
NVRAM	Non–Volatile Random Access Memory	–
O2S	Oxygen Sensor	Oxygen Sensor, O_2 Sensor (O_2S)
OBD	On–Board Diagnostic	On–Board Diagnostic System (OBD)
OC	Oxidation Catalytic Converter	Oxidation Catalyst Convert (OC), CCo
OP	Open Loop	Open Loop
PAIR	Pulsed Secondary Air Injection	Air Suction (AS)
PCM	Powertrain Control Module	–
PNP	Park/Neutral Position	–
PROM	Programmable Read Only Memory	–
PSP	Power Steering Pressure	–
PTOX	Periodic Trap Oxidizer	Diesel Particulate Filter (DPF) Diesel Particulate Trap (DPT)
RAM	Random Access Memory	Random Access Memory (RAM)
RM	Relay Module	–
ROM	Read Only Memory	Read Only Memory (ROM)
RPM	Engine Speed	Engine Speed
SC	Supercharger	Supercharger
SCB	Supercharger Bypass	E–ABV
SFI	Sequential Multiport Fuel Injection	Electronic Fuel Injection (EFI), Sequential Injection
SPL	Smoke Puff Limiter	–
SRI	Service Reminder Indicator	–
SRT	System Readiness Test	–
ST	Scan Tool	–
TB	Throttle Body	Throttle Body
TBI	Throttle Body Fuel Injection	Single Point Injection Central Fuel Injection (Ci)
TC	Turbocharger	Turbocharger
TCC	Torque Converter Clutch	Torque Converter

TCM	Transmission Control Module	Transmission ECU, ECT ECU
TP	Throttle Position	Throttle Position
TR	Transmission Range	–
TVV	Thermal Vacuum Valve	Bimetallic Vacuum Switching Valve (BVSV) Thermostatic Vacuum Switching Valve (TVSV)
TWC	Three–Way Catalytic Converter	Three–Way Catalytic (TWC) Manifold Converter CC_{RO}
TWC+OC	Three–Way + Oxidation Catalytic Converter	CC_R + CCo
VAF	Volume Air Flow	Air Flow Meter
VR	Voltage Regulator	Voltage Regulator
VSS	Vehicle Speed Sensor	Vehicle Speed Sensor
WOT	Wide Open Throttle	Full Throttle
WU–OC	Warm Up Oxidation Catalytic Converter	–
WU–TWC	Warm Up Three–Way Catalytic Converter	–
3GR	Third Gear	–
4GR	Fourth Gear	–

EMISSION CONTROL

021CY–01

PREPARATION

SST

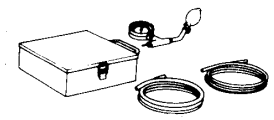	09992–00242 Turbocharger Pressure Gauge	EMISSION CONTROL SYSTEM(1ZZ–FE) EMISSION CONTROL SYSTEM(2ZZ–GE)

Equipment

Service Wire Harness	
Ohmmeter	
Vacuum gauge	

STARTING & CHARGING

021D0–01

PREPARATION

SST

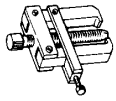	09286–46011	Injection Pump Spline Shaft Puller	GENERATOR ASSY
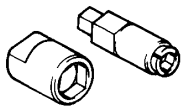	09820–63010	Alternator Pulley Set Nut Wrench Set	GENERATOR ASSY
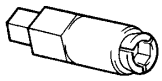	(09820–06010)	Alternator Rotor Shaft Wrench	GENERATOR ASSY
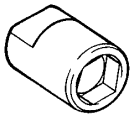	(09820–06020)	Alternator Pulley Set Nut 22 mm Wrench	GENERATOR ASSY

Recomended Tools

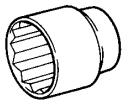	09011–12291	Socket Wrench for 29 mm .	GENERATOR ASSY
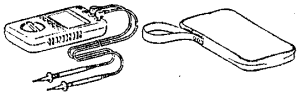	09082–00040	TOYOTA Electrical Tester	STARTING SYSTEM STARTER ASSY GENERATOR ASSY
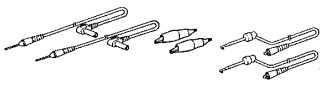	(09083–00150)	Test Lead Set	STARTING SYSTEM GENERATOR ASSY
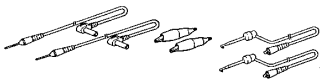	(09083–00150)	Test Lead Set	STARTING SYSTEM GENERATOR ASSY

Equipment

Dial indicator	
Service wire harness	
Ohmmeter	
Torque wrench	
V–block	
Vernier calipers	
Slide calipers	
Wooden block	

EXTERIOR/INTERIOR TRIM

021DV–01

PREPARATION

Recomended Tools

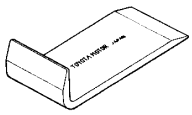	09070–20010 Moulding Remover	FRONT DOOR BELT MOULDING ASSY LH REAR DOOR BELT MOULDING ASSY LH REAR BUMPER ROOF HEADLINING ASSY

Equipment

Adhesive tape	To avoid surface damage.
Clip remover	
Tape	To avoid surface damage.
Torque wrench	

WINDSHIELD/WINDOWGLASS/MIRROR

021DW–01

PREPARATION

Recomended Tools

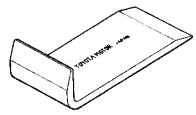	09070–20010	Moulding Remover	WINDSHIELD GLASS
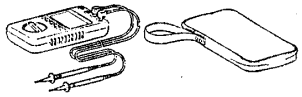	09082–00040	TOYOTA Electrical Tester	WINDOW DEFOGGER SYSTEM POWER MIRROR CONTROL SYSTEM POWER WINDOW CONTROL SYSTEM
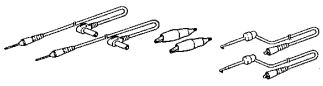	(09083–00150)	Test Lead Set	POWER WINDOW CONTROL SYSTEM

Equipment

Adhesive	
Knife	
Piano wire	Windshield
Plastic sheet	To avoid surface damage.
Sealer gun	
Torque wrench	
Tape	To avoid surface damage.
Wooden block or similar object	For tying both piano wire ends

SSM

	08833–00030	Three cement black or equivalent	WINDSHIELD GLASS QUARTER WINDOW ASSY LH
	08850–00801	Windshield Glass Adhesive Set or equivalent	WINDSHIELD GLASS QUARTER WINDOW ASSY LH

ENGINE CONTROL SYSTEM

021A8–01

PREPARATION

Equipment

Ohmmeter	
Radiator cap tester	
Torque wrench	

EXHAUST

021A7–01

PREPARATION

Equipment

Torque wrench	

COOLING

021CZ–01

PREPARATION

SST

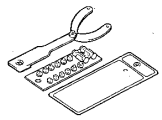	09960–10010	Variable Pin Wrench Set	WATER PUMP ASSY(2ZZ–GE)
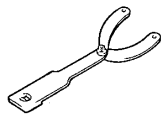	(09962–01000)	Variable Pin Wrench Arm Assy	WATER PUMP ASSY(2ZZ–GE)
	(09963–00600)	Pin 6	WATER PUMP ASSY(2ZZ–GE)

Recomended Tools

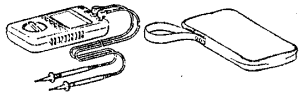	09082–00040	TOYOTA Electrical Tester	COOLING FAN SYSTEM
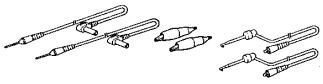	(09083–00150)	Test Lead Set	COOLING FAN SYSTEM

Equipment

Radiator cap tester	
Thermometer	
Torque wrench	
Slide calipers	
Heater	

Coolant

Item		Capacity	Classification
Engine coolant	1ZZ–FE	6.5 liters (6.9 US qts, 5.7 Imp. qts)	TOYOTA long life coolant
	2ZZ–GE	6.7 liters (7.1 US qts, 5.9 Imp. qts)	TOYOTA long life coolant

LUBRICATION

021A9–01

PREPARATION

SST

 09228–06501	Oil Filter Wrench	OIL FILTER SUB–ASSY(1ZZ–FE) OIL FILTER SUB–ASSY(2ZZ–GE)

Equipment

Feeler gauge	
Radiator cap tester	
Torque wrench	

IGNITION

021A6–01

PREPARATION

Recomended Tools

	(09857–00031) Spark Plug Gap Gauge	IGNITION SYSTEM(1ZZ–FE) IGNITION SYSTEM(2ZZ–GE)

Equipment

Ohmmeter	
Spark plug cleaner	

DIAGNOSTICS

PREPARATION

021E1–01

SST

	09816–30010	Oil Pressure Switch Socket	SFI SYSTEM(1ZZ–FE) SFI SYSTEM(2ZZ–GE)
	09843–18040	Diagnosis Check Wire No.2	SUPPLEMENTAL RESTRAINT SYSTEM SFI SYSTEM(1ZZ–FE) SFI SYSTEM(2ZZ–GE)

Recommended Tools

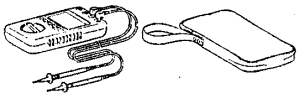	09082–00040	TOYOTA Electrical Tester	SUPPLEMENTAL RESTRAINT SYSTEM COMBINATION METER WIRELESS DOOR LOCK CONTROL SYSTEM SFI SYSTEM(1ZZ–FE) SFI SYSTEM(2ZZ–GE) ELECTRONIC CONTROLLED AUTOMATIC TRANSAXLE [ECT](A246E) ELECTRONIC CONTROLLED AUTOMATIC TRANSAXLE [ECT](U240E) ELECTRONIC CONTROLLED AUTOMATIC TRANSAXLE [ECT](U341F)
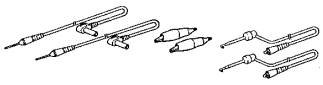	(09083–00150)	Test Lead Set	ABS WITH EBD SYSTEM SUPPLEMENTAL RESTRAINT SYSTEM AUDIO SYSTEM CRUISE CONTROL SYSTEM COMBINATION METER WIRELESS DOOR LOCK CONTROL SYSTEM POWER DOOR LOCK CONTROL SYSTEM SFI SYSTEM(1ZZ–FE) SFI SYSTEM(2ZZ–GE) ELECTRONIC CONTROLLED AUTOMATIC TRANSAXLE [ECT](A246E) ELECTRONIC CONTROLLED AUTOMATIC TRANSAXLE [ECT](U240E) ELECTRONIC CONTROLLED AUTOMATIC TRANSAXLE [ECT](U341F)

AUDIO & VISUAL SYSTEM

021DS–01

PREPARATION

SST

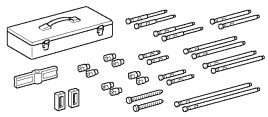	09950–50013	Puller C Set	NAVIGATION ANTENNA ASSY
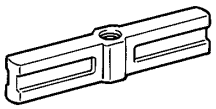	(09951–05010)	Hanger 150	NAVIGATION ANTENNA ASSY
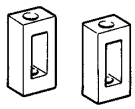	(09952–05010)	Slide Arm	NAVIGATION ANTENNA ASSY
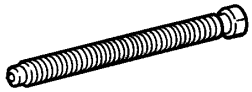	(09953–05020)	Center Bolt 150	NAVIGATION ANTENNA ASSY
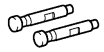	(09954–05021)	Claw No.2	NAVIGATION ANTENNA ASSY

Recomended Tools

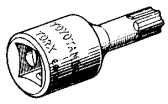	09042–00010	Torx Socket T30	NAVIGATION ANTENNA ASSY
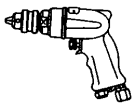	09050–00032	Air Drill	FRONT NO.1 SPEAKER ASSY REAR SPEAKER ASSY
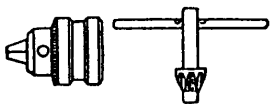	(09050–00210)	Chuck Set	FRONT NO.1 SPEAKER ASSY REAR SPEAKER ASSY
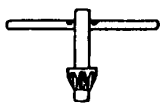	(09050–00220)	Handle	FRONT NO.1 SPEAKER ASSY REAR SPEAKER ASSY
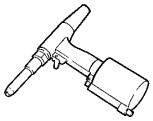	09050–20010	Air Riveter	FRONT NO.1 SPEAKER ASSY REAR SPEAKER ASSY
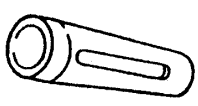	(09050–02010)	Dust Cap	FRONT NO.1 SPEAKER ASSY REAR SPEAKER ASSY
	(09050–02020)	Nose Piece No.1	FRONT NO.1 SPEAKER ASSY REAR SPEAKER ASSY

	09060–60350	Revet Cutter	FRONT NO.1 SPEAKER ASSY REAR SPEAKER ASSY
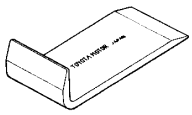	09070–20010	Moulding Remover	NAVIGATION ANTENNA ASSY ANTENNA CORD SUB–ASSY AMPLIFIER ANTENNA ASSY POWER POINT SOCKET ASSY CIGARETTE LIGHTER ASSY POWER POINT SOCKET ASSY NO.2

Equipment

Drill	
Vacuum cleaner	
Hand riveter	
Tape	
Torque wrench	

INSTRUMENT PANEL/METER

021D9–01

PREPARATION

SST

	09843–18020	Diagnosis Check Wire	COMBINATION METER
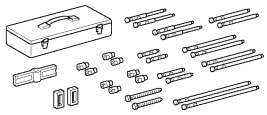	09950–50013	Puller C Set	INSTRUMENT PANEL SUB–ASSY LOWER
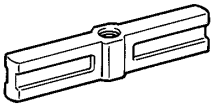	(09951–05010)	Hanger 150	INSTRUMENT PANEL SUB–ASSY LOWER
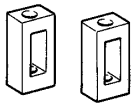	(09952–05010)	Slide Arm	INSTRUMENT PANEL SUB–ASSY LOWER
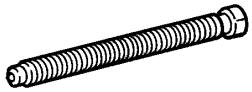	(09953–05020)	Center Bolt 150	INSTRUMENT PANEL SUB–ASSY LOWER
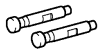	(09954–05021)	Claw No.2	INSTRUMENT PANEL SUB–ASSY LOWER

Recomended Tools

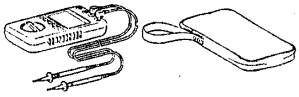	09082–00040	TOYOTA Electrical Tester	COMBINATION METER
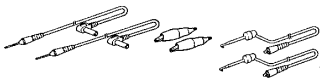	(09083–00150)	Test Lead Set	COMBINATION METER
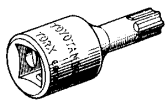	09042–00010	Torx Socket T30	INSTRUMENT PANEL SUB–ASSY LOWER
	09070–20010	Moulding Remover	INSTRUMENT PANEL SUB–ASSY LOWER COMBINATION METER ASSY

Equipment

Torque wrench	
Adhesive Tape	

AUTOMATIC TRANSMISSION / TRANS

021DN–01

PREPARATION

SST

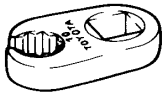	09023–12700	Union Nut Wrench 17mm	AUTOMATIC TRANSAXLE ASSY(A246E) AUTOMATIC TRANSAXLE ASSY(U240E) AUTOMATIC TRANSAXLE ASSY(U341F)
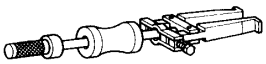	09308–00010	Oil Seal Puller	FRONT DIFFERENTIAL OIL SEAL(A246E) FRONT DIFFERENTIAL OIL SEAL(U240E) FRONT DIFFERENTIAL OIL SEAL(U341F)
	09309–37010	Transmission Bearing Replacer	FRONT DIFFERENTIAL OIL SEAL(U341F)
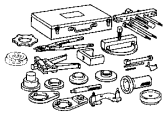	09350–32014	TOYOTA Automatic Transmission Tool Set	AUTOMATIC TRANSAXLE ASSY(A246E) FRONT DIFFERENTIAL OIL SEAL(A246E) TORQUE CONVERTER CLUTCH AND DRIVE PLATE(ATM) AUTOMATIC TRANSAXLE ASSY(U240E) AUTOMATIC TRANSAXLE ASSY(U341F)
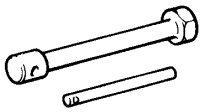	(09351–32010)	One–way Clutch Test Tool	AUTOMATIC TRANSAXLE ASSY(A246E) TORQUE CONVERTER CLUTCH AND DRIVE PLATE(ATM) AUTOMATIC TRANSAXLE ASSY(U240E) AUTOMATIC TRANSAXLE ASSY(U341F)
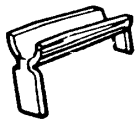	(09351–32020)	Stator Stopper	AUTOMATIC TRANSAXLE ASSY(A246E) TORQUE CONVERTER CLUTCH AND DRIVE PLATE(ATM) AUTOMATIC TRANSAXLE ASSY(U240E) AUTOMATIC TRANSAXLE ASSY(U341F)
	(09351–32111)	Side Bearing Race Replacer	FRONT DIFFERENTIAL OIL SEAL(A246E)
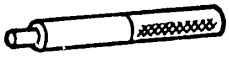	(09351–32130)	Handle	FRONT DIFFERENTIAL OIL SEAL(A246E)
	(09351–32150)	Oil Seal Replacer	FRONT DIFFERENTIAL OIL SEAL(A246E)

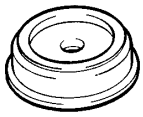	09554–14010	Differential Oil Seal Replacer	FRONT DIFFERENTIAL OIL SEAL(U240E)
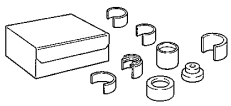	09726–27012	Front Suspension Arm Bushing Remover & Replacer	FRONT DIFFERENTIAL OIL SEAL(U240E) FRONT DIFFERENTIAL OIL SEAL(U341F)
	(09726–02041)	Replacer	FRONT DIFFERENTIAL OIL SEAL(U240E) FRONT DIFFERENTIAL OIL SEAL(U341F)
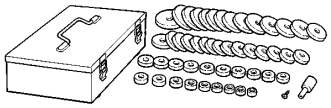	09950–60010	Replacer Set	FRONT DIFFERENTIAL OIL SEAL(U341F)
	(09951–00390)	Replacer 39	FRONT DIFFERENTIAL OIL SEAL(U341F)
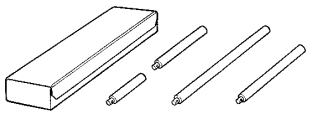	09950–70010	Handle Set	FRONT DIFFERENTIAL OIL SEAL(U240E) FRONT DIFFERENTIAL OIL SEAL(U341F)
	(09951–07200)	Handle 200	FRONT DIFFERENTIAL OIL SEAL(U240E) FRONT DIFFERENTIAL OIL SEAL(U341F)
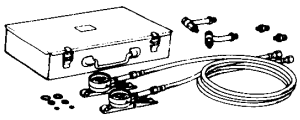	09992–00095	Automatic Transmission Oil Pressure Gauge Set	
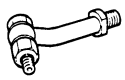	(09992–00231)	Adaptor C	
	(09992–00271)	Gauge Assy	
	09843–18030	Tacho–pulse Pickup Wire No.2	

Recomended Tools

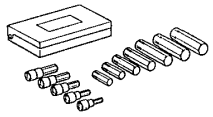	09040–00011	Hexagon Wrench Set	AUTOMATIC TRANSAXLE ASSY(U240E) TRANSMISSION VALVE BODY ASSY(U240E) FRONT DIFFERENTIAL OIL SEAL(U240E) TRANSMISSION WIRE(U240E) FRONT DIFFERENTIAL OIL SEAL(U341F) AUTOMATIC TRANSAXLE ASSY(U341F) TRANSMISSION VALVE BODY ASSY(U341F)
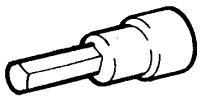	(09043–20100)	Socket Hexagon Wrench 10	FRONT DIFFERENTIAL OIL SEAL(A246E) AUTOMATIC TRANSAXLE ASSY(U240E) TRANSMISSION VALVE BODY ASSY(U240E) FRONT DIFFERENTIAL OIL SEAL(U240E) TRANSMISSION WIRE(U240E) FRONT DIFFERENTIAL OIL SEAL(U341F) AUTOMATIC TRANSAXLE ASSY(U341F) TRANSMISSION VALVE BODY ASSY(U341F)
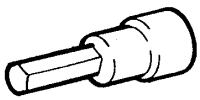	(09043–20050)	Socket Hexagon Wrench 5	AUTOMATIC TRANSAXLE ASSY(U341F)
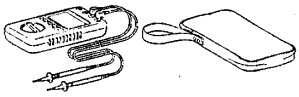	09082–00040	TOYOTA Electrical Tester	SHIFT LOCK CONTROL ECU(ATM)
	09090–04020	Engine Sling Device	AUTOMATIC TRANSAXLE ASSY(A246E) FRONT DIFFERENTIAL OIL SEAL(U341F) AUTOMATIC TRANSAXLE ASSY(U341F)

Equipment

Straight edge	Torque converter clutch
Vernier calipers	Torque converter clutch
Dial indicator or dial indicator with magnetic base	Drive plate
Torque wrench	
Engine sling device	Automatic transaxle assy
Slide calipers	Automatic transaxle assy,Front differential oil seal
Chain block	Automatic transaxle assy

Lubricant

Item	Capacity	Classification
A246E: Automatic transaxle fluid Dry fill Drain and refill	 7.3 liters (7.7 US qts, 6.4 lmp.qts) 3.0 liters (3.2 US qts, 2.6 lmp.qts)	ATF Type T–IV
U240E: Automatic transaxle fluid Dry fill Drain and refill	 7.6 liters (8.0 US qts, 6.7 lmp.qts) 4.1 liters (4.3 US qts, 3.6 lmp.qts)	ATF Type T–IV
U341F: Automatic transaxle fluid Dry fill Drain and refill	 6.88 liters (7.3 US qts, 6.1 lmp.qts) 2.1 liters (2.2 US qts, 1.8 lmp.qts)	ATF Type T–IV

SSM (Special Service Materials)

08833–00070	"Adhesive 1324," THREE BOND 1324 or equivalent	

DIFFERENTIAL

PREPARATION

021DZ–01

SST

	09223–15020	Oil Seal & Bearing Replacer	DIFFERENTIAL CARRIER ASSY REAR(4WD)
	09223–15030	Oil Seal & Bearing Replacer	DIFFERENTIAL CARRIER ASSY REAR(4WD)
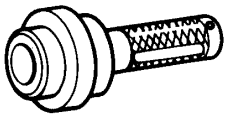	09223–46011	Crankshaft Front Oil Seal Replacer	DIFFERENTIAL CARRIER ASSY REAR(4WD)
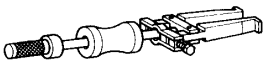	09308–00010	Oil Seal Puller	REAR DIFFERENTIAL SIDE GEAR SHAFT OIL SEAL(4WD) DIFFERENTIAL CARRIER ASSY REAR(4WD)
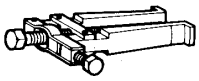	09308–10010	Oil Seal Puller	OIL DIAPHRAGM SEAL(4WD) DIFFERENTIAL CARRIER ASSY REAR(4WD)
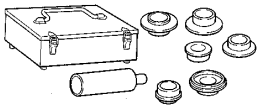	09316–60011	Transmission & Transfer Bearing Replacer	DIFFERENTIAL CARRIER ASSY REAR(4WD)
	(09316–00071)	Replacer "F"	DIFFERENTIAL CARRIER ASSY REAR(4WD)
	09325–20010	Transmission Oil Plug	OIL DIAPHRAGM SEAL(4WD) DIFFERENTIAL CARRIER ASSY REAR(4WD)
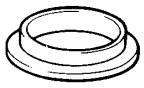	09502–12010	Differential Bearing Replacer	DIFFERENTIAL CARRIER ASSY REAR(4WD)
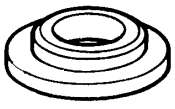	09506–35010	Differential Drive Pinion Rear Bearing Replacer	OIL DIAPHRAGM SEAL(4WD) DIFFERENTIAL CARRIER ASSY REAR(4WD)
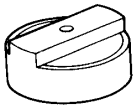	09518–36020	Rear Axle Hub Oil Seal Replacer	DIFFERENTIAL CARRIER ASSY REAR(4WD)
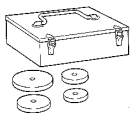	09550–55011	Differential Replacer Set	DIFFERENTIAL CARRIER ASSY REAR(4WD)

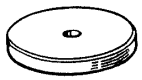	(09550–05061)	Replacer ”B”	DIFFERENTIAL CARRIER ASSY REAR(4WD)
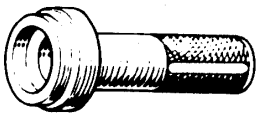	09554–22010	Differential Oil Seal Replacer	OIL DIAPHRAGM SEAL(4WD) REAR DIFFERENTIAL SIDE GEAR SHAFT OIL SEAL(4WD) DIFFERENTIAL CARRIER ASSY REAR(4WD)
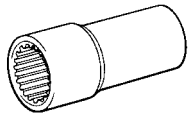	09556–16011	Differential Drive Pinion Holding Tool	DIFFERENTIAL CARRIER ASSY REAR(4WD)
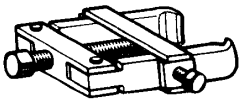	09556–30010	Drive Pinion Front Bearing Remover	DIFFERENTIAL CARRIER ASSY REAR(4WD)
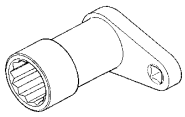	09564–16020	Drive Pinion Lock Nut Wrench	DIFFERENTIAL CARRIER ASSY REAR(4WD)
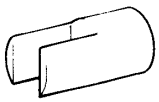	09564–32011	Differential Preload Adaptor	DIFFERENTIAL CARRIER ASSY REAR(4WD)
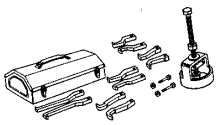	09612–65014	Steering Worm Bearing Puller	DIFFERENTIAL CARRIER ASSY REAR(4WD)
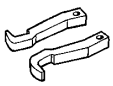	(09612–01020)	Claw ”B”	DIFFERENTIAL CARRIER ASSY REAR(4WD)
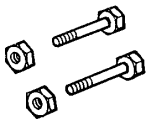	(09612–01050)	Hanger Pin with Nut	DIFFERENTIAL CARRIER ASSY REAR(4WD)
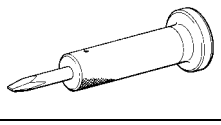	09930–00010	Drive Shaft Nut Chisel	DIFFERENTIAL CARRIER ASSY REAR(4WD)
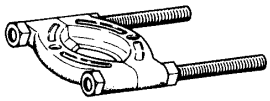	09950–00020	Bearing Remover	DIFFERENTIAL CARRIER ASSY REAR(4WD)
	09950–40011	Puller B Set	DIFFERENTIAL CARRIER ASSY REAR(4WD)
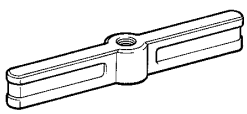	(09951–04020)	Hanger 200	DIFFERENTIAL CARRIER ASSY REAR(4WD)

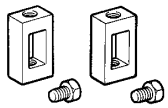	(09952–04010)	Slide Arm	DIFFERENTIAL CARRIER ASSY REAR(4WD)
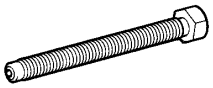	(09953–04020)	Center Bolt 150	DIFFERENTIAL CARRIER ASSY REAR(4WD)
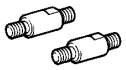	(09954–04010)	Arm 25	DIFFERENTIAL CARRIER ASSY REAR(4WD)
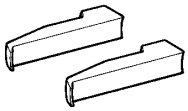	(09955–04011)	Claw No.1	DIFFERENTIAL CARRIER ASSY REAR(4WD)
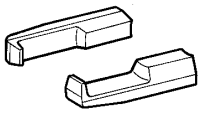	(09955–04061)	Claw No.6	DIFFERENTIAL CARRIER ASSY REAR(4WD)
	(09957–04010)	Attachment	DIFFERENTIAL CARRIER ASSY REAR(4WD)
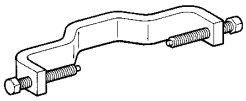	(09958–04011)	Holder	DIFFERENTIAL CARRIER ASSY REAR(4WD)
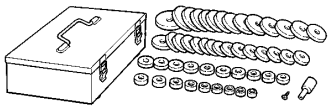	09950–60010	Replacer Set	DIFFERENTIAL CARRIER ASSY REAR(4WD)
	(09951–00270)	Replacer 27	DIFFERENTIAL CARRIER ASSY REAR(4WD)
	(09951–00370)	Replacer 37	DIFFERENTIAL CARRIER ASSY REAR(4WD)
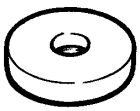	(09951–00460)	Replacer 46	DIFFERENTIAL CARRIER ASSY REAR(4WD)
	(09951–00490)	Replacer 49	DIFFERENTIAL CARRIER ASSY REAR(4WD)
	(09951–00530)	Replacer 53	DIFFERENTIAL CARRIER ASSY REAR(4WD)

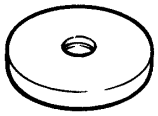	(09951–00540)	Replacer 54	DIFFERENTIAL CARRIER ASSY REAR(4WD)
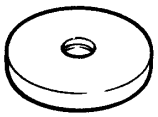	(09951–00580)	Replacer 58	DIFFERENTIAL CARRIER ASSY REAR(4WD)
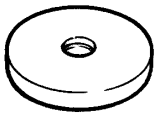	(09951–00620)	Replacer 62	DIFFERENTIAL CARRIER ASSY REAR(4WD)
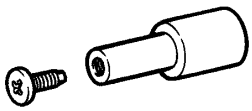	(09952–06010)	Adapter	DIFFERENTIAL CARRIER ASSY REAR(4WD)
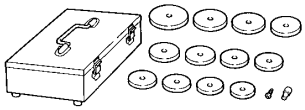	09950–60020	Replacer Set No.2	DIFFERENTIAL CARRIER ASSY REAR(4WD)
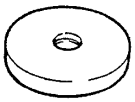	(09951–00680)	Replacer 68	DIFFERENTIAL CARRIER ASSY REAR(4WD)
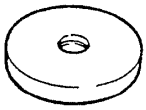	(09951–00910)	Replacer 91	DIFFERENTIAL CARRIER ASSY REAR(4WD)
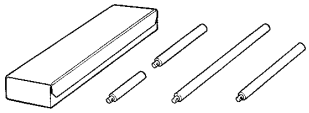	09950–70010	Handle Set	DIFFERENTIAL CARRIER ASSY REAR(4WD)
	(09951–07100)	Handle 100	DIFFERENTIAL CARRIER ASSY REAR(4WD)
	(09951–07150)	Handle 150	DIFFERENTIAL CARRIER ASSY REAR(4WD)

Recomended Tools

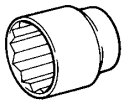	09011–12301	Socket Wrench 30 mm	DIFFERENTIAL CARRIER ASSY REAR(4WD)
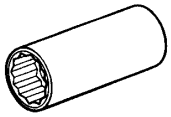	09017–12301	Deep Socket Wrench 30 mm .	DIFFERENTIAL CARRIER ASSY REAR(4WD)
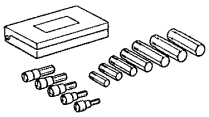	09040–00011	Hexagon Wrench Set	DIFFERENTIAL CARRIER ASSY REAR(4WD)

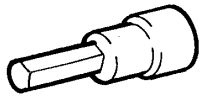	(09043–20060) Socket Hexagon Wrench 6	DIFFERENTIAL CARRIER ASSY REAR(4WD)
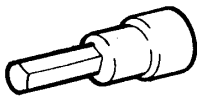	(09043–20100) Socket Hexagon Wrench 10	DIFFERENTIAL OIL(4WD) DIFFERENTIAL CARRIER ASSY REAR(4WD)
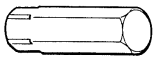	(09043–30170) Straight Hexagon Wrench 17	DIFFERENTIAL CARRIER ASSY REAR(4WD)

Equipment

Dial indicator	
Pin punch	
Torque wrench	

Lubricant

Item	Capacity	Classification
Differential oil	0.5 liters (0.52 US qts, 0.44 lmp. qts)	Hypoid gear oil API GL–5 Above –18°C (0°F) SAE 90 Below –18°C (0°F) SAE 80W or 80W–90

SSM

	08826–00090 "Seal Packing 1281," THREE BOND 1281 or equivalent (FIPG)	

DRIVE SHAFT / PROPELLER SHAFT

021DX–01

PREPARATION

SST

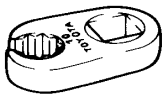	09023–00100	Union Nut Wrench 10 mm	REAR AXLE LH HUB BOLT REAR AXLE CARRIER SUB–ASSY LH(4WD) REAR DRIVE SHAFT(4WD)
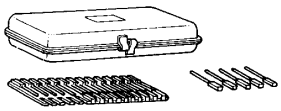	09240–00020	Wire Gauge Set	FRONT DRIVE SHAFT(1ZZ–FE) FRONT DRIVE SHAFT(2ZZ–GE)
	(09242–00080)	Wire Gauge 0.8 mm (0.031 in.)	FRONT DRIVE SHAFT(1ZZ–FE) FRONT DRIVE SHAFT(2ZZ–GE)
	(09242–00150)	Wire Gauge 1.5 mm (0.059 in.)	FRONT DRIVE SHAFT(1ZZ–FE)
	09325–20010	Transmission Oil Plug	PROPELLER W/CENTER BEARING SHAFT ASSY(4WD)
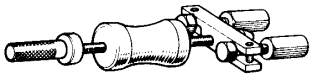	09520–00031	Rear Axle Shaft Puller	FRONT AXLE HUB SUB–ASSY LH
	09520–01010	Drive Shaft Remover Attachment	FRONT DRIVE SHAFT(1ZZ–FE) FRONT DRIVE SHAFT(2ZZ–GE)
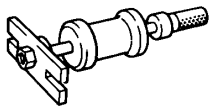	09520–24010	Differential Side Gear Shaft Puller	FRONT DRIVE SHAFT(1ZZ–FE) FRONT DRIVE SHAFT(2ZZ–GE)
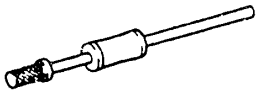	(09520–32040)	Shocker Set	FRONT DRIVE SHAFT(1ZZ–FE) FRONT DRIVE SHAFT(2ZZ–GE)
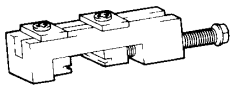	09521–24010	Rear Axle Shaft Puller	FRONT DRIVE SHAFT(1ZZ–FE) FRONT DRIVE SHAFT(2ZZ–GE)
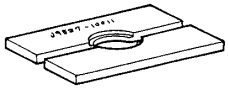	09527–10011	Rear Axle Shaft Bearing Remover	FRONT DRIVE SHAFT(1ZZ–FE) FRONT DRIVE SHAFT(2ZZ–GE)
	09527–17011	Rear Axle Shaft Bearing Remover	FRONT AXLE HUB SUB–ASSY LH

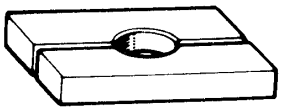	09527–21011	Rear Axle Shaft Bearing Remover	FRONT DRIVE SHAFT(2ZZ–GE) REAR DRIVE SHAFT(4WD)
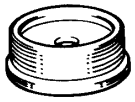	09608–10010	Steering Knuckle Oil Seal Replacer	REAR AXLE LH HUB BOLT REAR AXLE CARRIER SUB–ASSY LH(4WD)
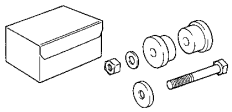	09608–16042	Front Hub Bearing Adjusting Tool	FRONT DRIVE SHAFT(1ZZ–FE) FRONT DRIVE SHAFT(2ZZ–GE)
	(09608–02021)	Bolt & Nut	FRONT DRIVE SHAFT(1ZZ–FE) FRONT DRIVE SHAFT(2ZZ–GE)
	(09608–02041)	Retainer	FRONT DRIVE SHAFT(1ZZ–FE) FRONT DRIVE SHAFT(2ZZ–GE)
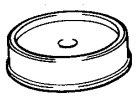	09608–32010	Steering Knuckle Oil Seal Replacer	FRONT AXLE HUB SUB–ASSY LH
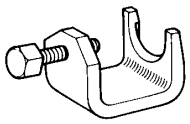	09628–10011	Ball Joint Puller	REAR AXLE LH HUB BOLT FRONT AXLE LH HUB BOLT
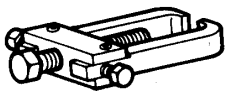	09628–62011	Boll Joint Puller	FRONT AXLE HUB SUB–ASSY LH FRONT DRIVE SHAFT(1ZZ–FE) FRONT DRIVE SHAFT(2ZZ–GE)
	09710–04081	Base	FRONT DRIVE SHAFT(2ZZ–GE)
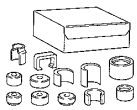	09710–30021	Suspension Bushing Tool Set	FRONT DRIVE SHAFT(1ZZ–FE)
	(09710–03141)	Bushing Remover Base	FRONT DRIVE SHAFT(1ZZ–FE)
	09726–40010	Lower Control Shaft Bearing Replacer	FRONT DRIVE SHAFT(2ZZ–GE)
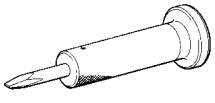	09930–00010	Drive Shaft Nut Chisel	REAR AXLE LH HUB BOLT FRONT AXLE HUB SUB–ASSY LH FRONT DRIVE SHAFT(1ZZ–FE) FRONT DRIVE SHAFT(2ZZ–GE) REAR AXLE CARRIER SUB–ASSY LH(4WD) REAR DRIVE SHAFT(4WD)

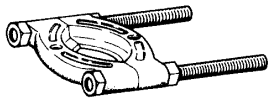	09950–00020	Bearing Remover	FRONT DRIVE SHAFT(1ZZ–FE) FRONT DRIVE SHAFT(2ZZ–GE) REAR DRIVE SHAFT(4WD)
	09950–40011	Puller B Set	FRONT AXLE HUB SUB–ASSY LH PROPELLER W/CENTER BEARING SHAFT ASSY(4WD)
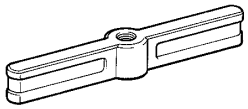	(09951–04020)	Hanger 200	FRONT AXLE HUB SUB–ASSY LH PROPELLER W/CENTER BEARING SHAFT ASSY(4WD)
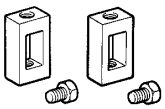	(09952–04010)	Slide Arm	FRONT AXLE HUB SUB–ASSY LH PROPELLER W/CENTER BEARING SHAFT ASSY(4WD)
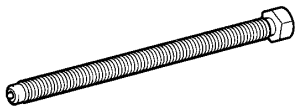	(09953–04030)	Center Bolt 200	FRONT AXLE HUB SUB–ASSY LH PROPELLER W/CENTER BEARING SHAFT ASSY(4WD)
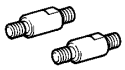	(09954–04010)	Arm 25	FRONT AXLE HUB SUB–ASSY LH PROPELLER W/CENTER BEARING SHAFT ASSY(4WD)
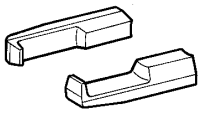	(09955–04061)	Claw No.6	FRONT AXLE HUB SUB–ASSY LH PROPELLER W/CENTER BEARING SHAFT ASSY(4WD)
	(09957–04010)	Attachment	FRONT AXLE HUB SUB–ASSY LH PROPELLER W/CENTER BEARING SHAFT ASSY(4WD)
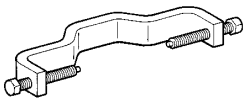	(09958–04011)	Holder	FRONT AXLE HUB SUB–ASSY LH PROPELLER W/CENTER BEARING SHAFT ASSY(4WD)
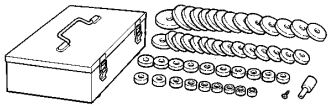	09950–60010	Replacer Set	FRONT AXLE HUB SUB–ASSY LH FRONT DRIVE SHAFT(2ZZ–GE)
	(09951–00370)	Replacer 37	FRONT AXLE HUB SUB–ASSY LH
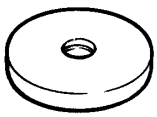	(09951–00600)	Replacer 60	FRONT AXLE HUB SUB–ASSY LH
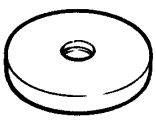	(09951–00640)	Replacer 64	FRONT AXLE HUB SUB–ASSY LH

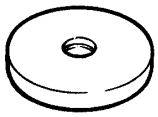	(09951–00650)	Replacer 65	FRONT DRIVE SHAFT(2ZZ–GE)
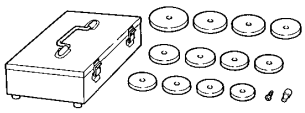	09950–60020	Replacer Set No.2	REAR AXLE LH HUB BOLT FRONT AXLE HUB SUB–ASSY LH REAR AXLE CARRIER SUB–ASSY LH(4WD)
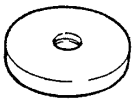	(09951–00680)	Replacer 68	REAR AXLE LH HUB BOLT REAR AXLE CARRIER SUB–ASSY LH(4WD)
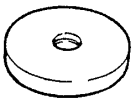	(09951–00720)	Replacer 72	FRONT AXLE HUB SUB–ASSY LH
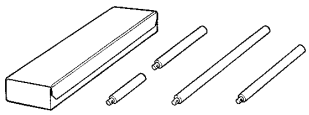	09950–70010	Handle Set	REAR AXLE LH HUB BOLT FRONT AXLE HUB SUB–ASSY LH FRONT DRIVE SHAFT(2ZZ–GE) REAR AXLE CARRIER SUB–ASSY LH(4WD)
	(09951–07100)	Handle 100	REAR AXLE LH HUB BOLT FRONT AXLE HUB SUB–ASSY LH FRONT DRIVE SHAFT(2ZZ–GE) REAR AXLE CARRIER SUB–ASSY LH(4WD)

Recomended Tools

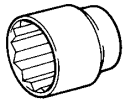	09011–12301	Socket Wrench 30 mm	REAR AXLE LH HUB BOLT FRONT AXLE HUB SUB–ASSY LH FRONT DRIVE SHAFT(1ZZ–FE) FRONT DRIVE SHAFT(2ZZ–GE) REAR AXLE CARRIER SUB–ASSY LH(4WD) REAR DRIVE SHAFT(4WD)
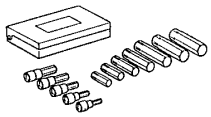	09040–00011	Hexagon Wrench Set	FRONT AXLE HUB SUB–ASSY LH FRONT DRIVE SHAFT(1ZZ–FE) FRONT DRIVE SHAFT(2ZZ–GE) REAR AXLE CARRIER SUB–ASSY LH(4WD) PROPELLER W/CENTER BEARING SHAFT ASSY(4WD) REAR DRIVE SHAFT(4WD)
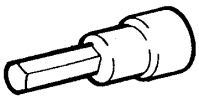	(09043–20050)	Socket Hexagon Wrench 5	REAR AXLE LH HUB BOLT REAR AXLE CARRIER SUB–ASSY LH(4WD) REAR DRIVE SHAFT(4WD)
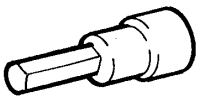	(09043–20060)	Socket Hexagon Wrench 6	FRONT AXLE HUB SUB–ASSY LH FRONT DRIVE SHAFT(1ZZ–FE) FRONT DRIVE SHAFT(2ZZ–GE) PROPELLER W/CENTER BEARING SHAFT ASSY(4WD)
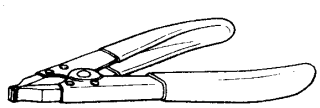	09905–00012	Snap Ring No.1 Expander	FRONT DRIVE SHAFT(1ZZ–FE) FRONT DRIVE SHAFT(2ZZ–GE)

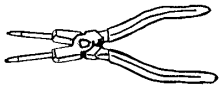	09905–00013 Snap Ring Pliers	FRONT AXLE HUB SUB–ASSY LH

Equipment

Torque wrench	
Dial indicator with magnetic base	

Lubricant

Item		Capacity
Front drive shaft:		
1ZZ–FE	Outboard joint grease (4WD):	130 – 140 g (4.6 – 4.9 oz.)
	Inboard joint grease:	135 – 155 g (4.8 – 5.5 oz.)
2ZZ–GE	Outboard joint grease:	152 – 162 g (5.4 – 5.7 oz.)
	Inboard joint grease:	160 – 180 g (5.6 – 6.3 oz.)
Rear drive shaft (4WD):	Outboard joint grease:	71 – 81 g (2.5 – 2.9 oz.)
	Inboard joint grease:	132 – 142 g (4.7 – 5.0 oz.)

SLIDING ROOF/CONVERTIBLE

021DK–01

PREPARATION

Recomended Tools

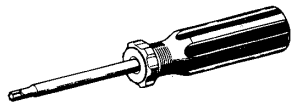	09041–00020	Torx Driver T25	SLIDING ROOF HOUSING SUB–ASSY
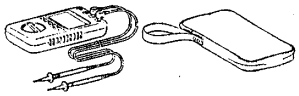	09082–00040	TOYOTA Electrical Tester	SLIDING ROOF SYSTEM

Equipment

Torque wrench	

MANUAL TRANSMISSION/TRANSAXLE

021DU–02

PREPARATION

SST

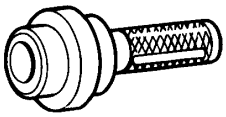	09223–50010	Crankshaft Front Oil Seal Replacer	OUTPUT SHAFT ASSY(C59) OUTPUT SHAFT ASSY(C60)
	09249–63010	Torque Wrench Adaptor	FLOOR SHIFT CABLE TRANSMISSION CONTROL SHIFT(MTM) FLOOR SHIFT CABLE TRANSMISSION CONTROL SELECT(MTM)
	09308–00010	Oil Seal Puller	MANUAL TRANSAXLE ASSY(C59) MANUAL TRANSAXLE ASSY(C60) FRONT DIFFERENTIAL OIL SEAL(MTM)
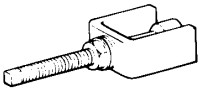	09309–12020	5th Driven Gear Replacer	MANUAL TRANSAXLE ASSY(C59)
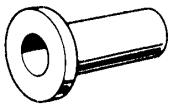	09309–36010	Transmission Rear Bearing Replacer	MANUAL TRANSAXLE ASSY(C59) MANUAL TRANSAXLE ASSY(C60)
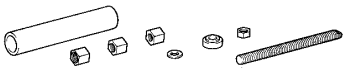	09309–36100	Transmission Bearing Replacer Set	OUTPUT SHAFT ASSY(C59) INPUT SHAFT ASSY(C60) OUTPUT SHAFT ASSY(C60)
	(09309–03610)	Body	OUTPUT SHAFT ASSY(C59) INPUT SHAFT ASSY(C60) OUTPUT SHAFT ASSY(C60)
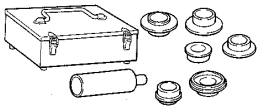	09316–60011	Transmission & Transfer Bearing Replacer	MANUAL TRANSAXLE ASSY(C59) INPUT SHAFT ASSY(C59) OUTPUT SHAFT ASSY(C59) MANUAL TRANSAXLE ASSY(C60)
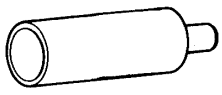	(09316–00011)	Replacer Pipe	MANUAL TRANSAXLE ASSY(C59) MANUAL TRANSAXLE ASSY(C60)
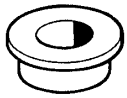	(09316–00021)	Replacer ”A”	INPUT SHAFT ASSY(C59)
	(09316–00031)	Replacer ”B”	OUTPUT SHAFT ASSY(C59)
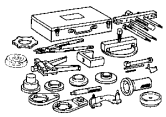	09350–32014	TOYOTA Automatic Transmission Tool Set	MANUAL TRANSAXLE ASSY(C59) MANUAL TRANSAXLE ASSY(C60)

	(09351–32120)	Overdrive Bearing Replacer	MANUAL TRANSAXLE ASSY(C59) MANUAL TRANSAXLE ASSY(C60)
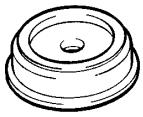	09554–14010	Differential Oil Seal Replacer	FRONT DIFFERENTIAL OIL SEAL(MTM)
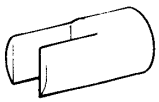	09564–32011	Differential Preload Adaptor	MANUAL TRANSAXLE ASSY(C59) MANUAL TRANSAXLE ASSY(C60)
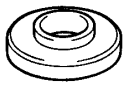	09608–00071	Drive Pinion Rear Bearing Cone Replacer	OUTPUT SHAFT ASSY(C59) OUTPUT SHAFT ASSY(C60)
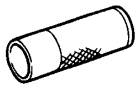	09608–04031	Front Hub Inner Bearing Cone Replacer	MANUAL TRANSAXLE ASSY(C60) INPUT SHAFT ASSY(C60)
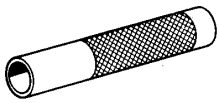	09612–22011	Tilt Handle Bearing Replacer	OUTPUT SHAFT ASSY(C59) OUTPUT SHAFT ASSY(C60)
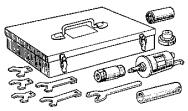	09612–24014	Steering Gear Housing Overhaul Tool Set	MANUAL TRANSAXLE ASSY(C60)
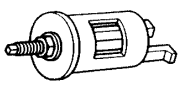	(09613–22011)	Steering Rack Shaft Bushing Puller	MANUAL TRANSAXLE ASSY(C60)
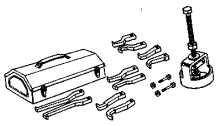	09612–65014	Steering Worm Bearing Puller	MANUAL TRANSAXLE ASSY(C59) MANUAL TRANSAXLE ASSY(C60)
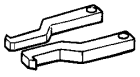	(09612–01040)	Claw ”D”	MANUAL TRANSAXLE ASSY(C59) MANUAL TRANSAXLE ASSY(C60)
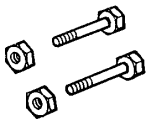	(09612–01050)	Hanger Pin with Nut	MANUAL TRANSAXLE ASSY(C59) MANUAL TRANSAXLE ASSY(C60)
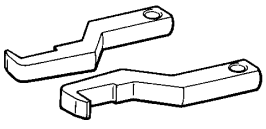	(09612–01060)	Claw ”E”	MANUAL TRANSAXLE ASSY(C59)
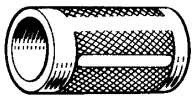	09636–20010	Upper Ball Joint Dust Cover Replacer	MANUAL TRANSAXLE ASSY(C59) INPUT SHAFT ASSY(C59)

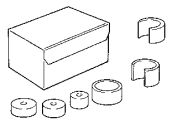	09710–20011	Front Suspension Bushing Tool Set	MANUAL TRANSAXLE ASSY(C59)
	(09710–06071)	Replacer	MANUAL TRANSAXLE ASSY(C59)
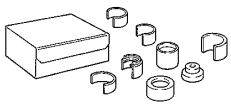	09726–27012	Front Suspension Arm Bushing Remover & Replacer	MANUAL TRANSAXLE ASSY(C60)
	(09726–02041)	Replacer	MANUAL TRANSAXLE ASSY(C60)
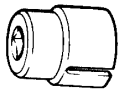	09817–16011	Back–up Light Switch Tool	MANUAL TRANSAXLE ASSY(C59) MANUAL TRANSAXLE ASSY(C60)
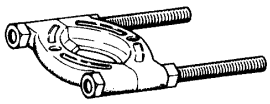	09950–00020	Bearing Remover	MANUAL TRANSAXLE ASSY(C59) INPUT SHAFT ASSY(C59) OUTPUT SHAFT ASSY(C59) MANUAL TRANSAXLE ASSY(C60) INPUT SHAFT ASSY(C60) OUTPUT SHAFT ASSY(C60)
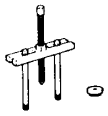	09950–00030	Bearing Remover Attachment	MANUAL TRANSAXLE ASSY(C59) MANUAL TRANSAXLE ASSY(C60)
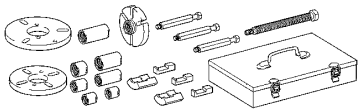	09950–30012	Puller A Set	MANUAL TRANSAXLE ASSY(C59) MANUAL TRANSAXLE ASSY(C60)
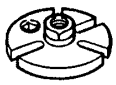	(09951–03010)	Upper Plate	MANUAL TRANSAXLE ASSY(C59) MANUAL TRANSAXLE ASSY(C60)
	(09953–03010)	Center Bolt	MANUAL TRANSAXLE ASSY(C59) MANUAL TRANSAXLE ASSY(C60)
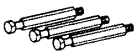	(09954–03010)	Arm	MANUAL TRANSAXLE ASSY(C59) MANUAL TRANSAXLE ASSY(C60)
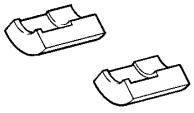	(09955–03011)	Claw No.1	MANUAL TRANSAXLE ASSY(C59) MANUAL TRANSAXLE ASSY(C60)
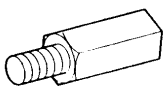	(09956–03080)	Adapter10	MANUAL TRANSAXLE ASSY(C60)

	(09957–04010) Attachment	MANUAL TRANSAXLE ASSY(C59) MANUAL TRANSAXLE ASSY(C60)
	09950–40011 Puller B Set	MANUAL TRANSAXLE ASSY(C59) MANUAL TRANSAXLE ASSY(C60)
	(09951–00390) Replacer 39	MANUAL TRANSAXLE ASSY(C60)
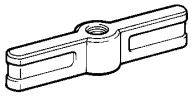	(09951–04010) Hanger 150	MANUAL TRANSAXLE ASSY(C59) MANUAL TRANSAXLE ASSY(C60)
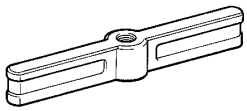	(09951–04020) Hanger 200	MANUAL TRANSAXLE ASSY(C59)
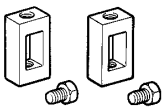	(09952–04010) Slide Arm	MANUAL TRANSAXLE ASSY(C59) MANUAL TRANSAXLE ASSY(C60)
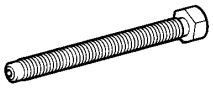	(09953–04020) Center Bolt 150	MANUAL TRANSAXLE ASSY(C59) MANUAL TRANSAXLE ASSY(C60)
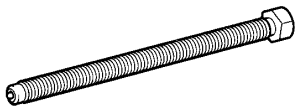	(09953–04030) Center Bolt 200	MANUAL TRANSAXLE ASSY(C59)
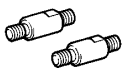	(09954–04010) Arm 25	MANUAL TRANSAXLE ASSY(C59) MANUAL TRANSAXLE ASSY(C60)
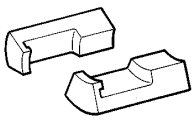	(09955–04021) Claw No.2	MANUAL TRANSAXLE ASSY(C60)
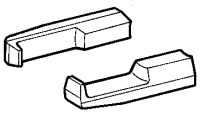	(09955–04061) Claw No.6	MANUAL TRANSAXLE ASSY(C59) MANUAL TRANSAXLE ASSY(C60)
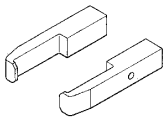	(09955–04071) Claw No.7	MANUAL TRANSAXLE ASSY(C59)
	(09957–04010) Attachment	MANUAL TRANSAXLE ASSY(C59) MANUAL TRANSAXLE ASSY(C60)

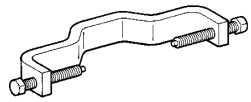	(09958–04011)	Holder	MANUAL TRANSAXLE ASSY(C59) MANUAL TRANSAXLE ASSY(C60)
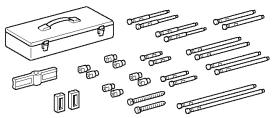	09950–50013	Puller C Set	MANUAL TRANSAXLE ASSY(C60)
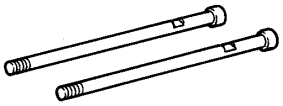	(09954–05040)	Claw No.4	MANUAL TRANSAXLE ASSY(C60)
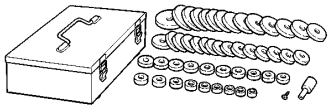	09950–60010	Replacer Set	MANUAL TRANSAXLE ASSY(C59) OUTPUT SHAFT ASSY(C59) SHIFT & SELECT LEVER SHAFT ASSY(C59) MANUAL TRANSAXLE ASSY(C60) INPUT SHAFT ASSY(C60) OUTPUT SHAFT ASSY(C60) SHIFT & SELECT LEVER SHAFT ASSY(C60)
	(09951–00190)	Replacer 19	MANUAL TRANSAXLE ASSY(C59) MANUAL TRANSAXLE ASSY(C60)
	(09951–00200)	Replacer 20	MANUAL TRANSAXLE ASSY(C59)
	(09951–00220)	Replacer 22	SHIFT & SELECT LEVER SHAFT ASSY(C59)
	(09951–00280)	Replacer 28	SHIFT & SELECT LEVER SHAFT ASSY(C60)
	(09951–00360)	Replacer 36	MANUAL TRANSAXLE ASSY(C59)
	(09951–00370)	Replacer 37	MANUAL TRANSAXLE ASSY(C59) MANUAL TRANSAXLE ASSY(C60)
	(09951–00390)	Replacer 39	MANUAL TRANSAXLE ASSY(C60)
	(09951–00420)	Replacer 42	MANUAL TRANSAXLE ASSY(C59) MANUAL TRANSAXLE ASSY(C60)

	(09951–00450)	Replacer 45	OUTPUT SHAFT ASSY(C59) INPUT SHAFT ASSY(C60) OUTPUT SHAFT ASSY(C60)
	(09951–00530)	Replacer 53	MANUAL TRANSAXLE ASSY(C59) MANUAL TRANSAXLE ASSY(C60)
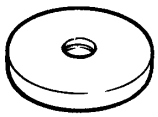	(09951–00550)	Replacer 55	MANUAL TRANSAXLE ASSY(C59) MANUAL TRANSAXLE ASSY(C60)
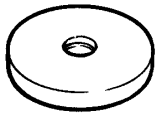	(09951–00600)	Replacer 60	MANUAL TRANSAXLE ASSY(C59) MANUAL TRANSAXLE ASSY(C60)
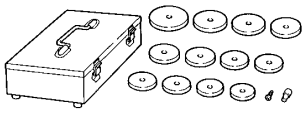	09950–60020	Replacer Set No.2	MANUAL TRANSAXLE ASSY(C59) MANUAL TRANSAXLE ASSY(C60)
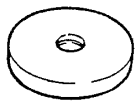	(09951–00680)	Replacer 68	MANUAL TRANSAXLE ASSY(C59) MANUAL TRANSAXLE ASSY(C60)
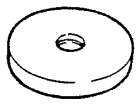	(09951–00710)	Replacer 71	MANUAL TRANSAXLE ASSY(C59) MANUAL TRANSAXLE ASSY(C60)
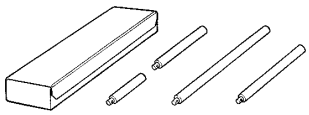	09950–70010	Handle Set	MANUAL TRANSAXLE ASSY(C59) SHIFT & SELECT LEVER SHAFT ASSY(C59) MANUAL TRANSAXLE ASSY(C60) SHIFT & SELECT LEVER SHAFT ASSY(C60) FRONT DIFFERENTIAL OIL SEAL(MTM)
	(09951–07100)	Handle 100	MANUAL TRANSAXLE ASSY(C59) SHIFT & SELECT LEVER SHAFT ASSY(C59) MANUAL TRANSAXLE ASSY(C60)
	(09951–07150)	Handle 150	MANUAL TRANSAXLE ASSY(C59) MANUAL TRANSAXLE ASSY(C60) SHIFT & SELECT LEVER SHAFT ASSY(C60)
	(09951–07200)	Handle 200	FRONT DIFFERENTIAL OIL SEAL(MTM)

Recomended Tools

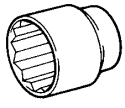	09011–12301	Socket Wrench 30 mm	MANUAL TRANSAXLE ASSY(MTM)

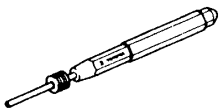	09031–00030	Pin Punch	DIFFERENTIAL CASE ASSY(MTM)
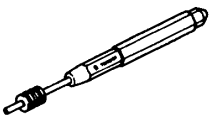	09031–00040	Pin Punch .	MANUAL TRANSAXLE ASSY(C59) SHIFT & SELECT LEVER SHAFT ASSY(C59) SHIFT & SELECT LEVER SHAFT ASSY(C60)
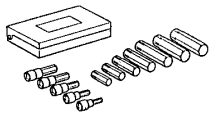	09040–00011	Hexagon Wrench Set	MANUAL TRANSAXLE ASSY(C60)
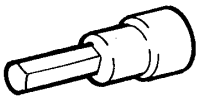	(09043–20060)	Socket Hexagon Wrench 6	MANUAL TRANSAXLE ASSY(C59) MANUAL TRANSAXLE ASSY(C60)
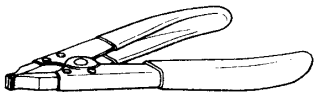	09905–00012	Snap Ring No.1 Expander	MANUAL TRANSAXLE ASSY(C59) MANUAL TRANSAXLE ASSY(C60) SHIFT & SELECT LEVER SHAFT ASSY(C60)
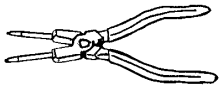	09905–00013	Snap Ring Pliers	SHIFT & SELECT LEVER SHAFT ASSY(C60)

Equipment

Dial indicator	
Feeler gauge	
Micrometer	
Torque wrench	
Slide calipers	
Cylinder gauge	
Caliper gauge	

Lubricant

Item	Capacity	Classification
C59 Manual transaxle oil (w/ Differential oil)	1.9 liters (2.0 US qts, 1.7 lmp. qts)	API GL–4 or GL–5 SAE 75W–90
C64 Manual transaxle oil (w/ Differential oil)	2.3 liters (2.4 US qts, 2.0 lmp. qts)	API GL–4 or GL–5 SAE 75W–90

SSM (Special Service Materials)

	08826–00090	”Seal Packing 1281,” THREE BOND 1281 or equivalent (FIPG)	MANUAL TRANSAXLE ASSY(C59) MANUAL TRANSAXLE ASSY(C60)
	08833–00080	Adhesive 1344 THREE BOND 1344 LOCTITE 242 or equivalent	MANUAL TRANSAXLE ASSY(C59) MANUAL TRANSAXLE ASSY(C60)

WIPER & WASHER

021DQ–01

PREPARATION

SST

	09843–18020	Diagnosis Check Wire	WIPER AND WASHER SYSTEM
	09843–18040	Diagnosis Check Wire No.2	WIPER AND WASHER SYSTEM

Recomended Tools

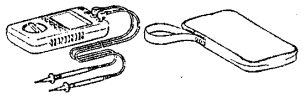	09082–00040	TOYOTA Electrical Tester	WIPER AND WASHER SYSTEM
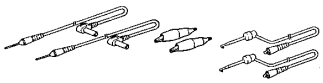	(09083–00150)	Test Lead Set	WIPER AND WASHER SYSTEM

Equipment

Torque wrench	
Deep Socket Wrench 24 mm	

COMMUNICATION SYSTEM

021EY–01

PREPARATION

Recomended Tools

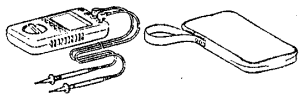	09082–00040	TOYOTA Electrical Tester	HORN SYSTEM

LIGHTING

021DP–01

PREPARATION

Recomended Tools

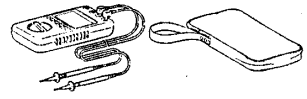	09082–00040	TOYOTA Electrical Tester	LIGHTING SYSTEM
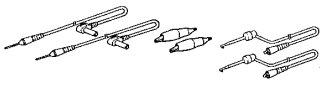	(09083–00150)	Test Lead Set	LIGHTING SYSTEM

Equipment

Torque wrench	

SUPPLEMENTAL RESTRAINT SYSTEM

021DI–01

PREPARATION

SST

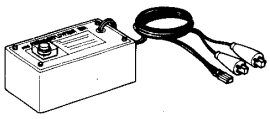	09082–00700	SRS Airbag Deployment Tool	HORN BUTTON ASSY FRONT SEAT AIRBAG ASSY RH INSTRUMENT PANEL PASSENGER AIR BAG ASSY
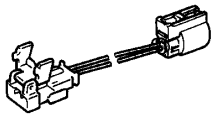	09082–00750	Airbag Deployment Wire Sub–harness No.3	FRONT SEAT AIRBAG ASSY RH
	09082–00780	Airbag Deployment Wire Sub–harness No.6	HORN BUTTON ASSY INSTRUMENT PANEL PASSENGER AIR BAG ASSY
	09082–00801	Airbag Deployment Wire Sub–Harness No. 8	HORN BUTTON ASSY
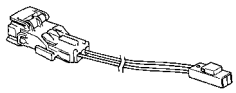	(09082–10801)	Wire A	HORN BUTTON ASSY
	(09082–30801)	Wire C	HORN BUTTON ASSY
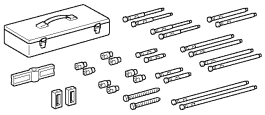	09950–50013	Puller C Set	SPIRAL CABLE SUB–ASSY
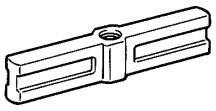	(09951–05010)	Hanger 150	SPIRAL CABLE SUB–ASSY
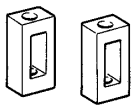	(09952–05010)	Slide Arm	SPIRAL CABLE SUB–ASSY
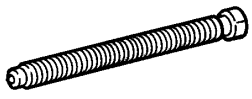	(09953–05020)	Center Bolt 150	SPIRAL CABLE SUB–ASSY
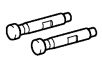	(09954–05021)	Claw No.2	SPIRAL CABLE SUB–ASSY

Recomended Tools

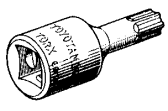	09042–00010	Torx Socket T30	HORN BUTTON ASSY SPIRAL CABLE SUB–ASSY

Equipment

Torque wrench	
Bolt Length: 35.0 mm (1.378 in.) Pitch: 1.0 mm (0.039 in.) Diam.: 6.0 mm (0.236 in.)	Airbag disposal
Tire Width: 185 mm (7.28 in.) Inner diam.: 360 mm (14.17 in.)	Airbag disposal
Tire with disc wheel Width: 185 mm (7.28 in.) Inner diam.: 360 mm (14.17 in.)	Airbag disposal
Vinyl bag	Airbag disposal

TIRE & WHEEL

021DE–01

PREPARATION

Equipment

Tire pressure gauge	
Dial indicator with magnetic base	
Wheel balancer	

FRONT SUSPENSION

PREPARATION

021DB–01

SST

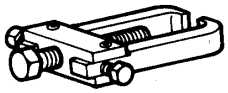	09628–62011	Boll Joint Puller	LOWER BALL JOINT ASSY FRONT LH
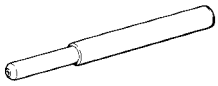	09670–00010	Front Crossmember Guide Tool	FRONT SUSPENSION ARM SUB–ASSY LOWER NO.1 LH STABILIZER BAR FRONT
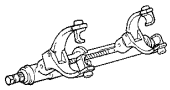	09727–30021	Coil Spring Compressor	FRONT SHOCK ABSORBER WITH COIL SPRING
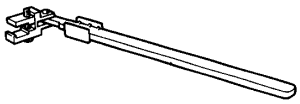	09729–22031	Front Spring Upper Seat Holder	FRONT SHOCK ABSORBER WITH COIL SPRING
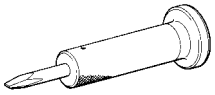	09930–00010	Drive Shaft Nut Chisel	LOWER BALL JOINT ASSY FRONT LH

Recomended Tools

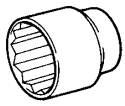	09011–12301	Socket Wrench 30 mm	LOWER BALL JOINT ASSY FRONT LH
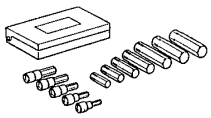	09040–00011	Hexagon Wrench Set	FRONT SHOCK ABSORBER WITH COIL SPRING FRONT SUSPENSION ARM SUB–ASSY LOWER NO.1 LH STABILIZER BAR FRONT
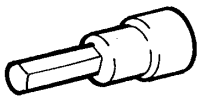	(09043–20060)	Socket Hexagon Wrench 6	FRONT SHOCK ABSORBER WITH COIL SPRING FRONT SUSPENSION ARM SUB–ASSY LOWER NO.1 LH STABILIZER BAR FRONT

Equipment

Torque wrench	
Dial indicator with magnetic base	
Tire pressure gauge	
Alignment tester	
Toe–in gauge	
Angle gauge	
Camber–caster–kingpin gauge	
Engine Sling Device	
Drill	

REAR SUSPENSION

PREPARATION

021CS–01

SST

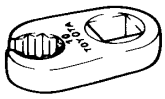	09023–00100	Union Nut Wrench 10 mm	STABILIZER BAR REAR(4WD) UPPER CONTROL ARM ASSY(4WD) REAR AXLE BEAM ASSY(FF)
	09325–20010	Transmission Oil Plug	STABILIZER BAR REAR(4WD)
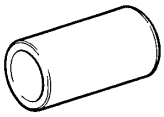	09632–36010	Steering Vane Pump Bearing Replacer	REAR SUSPENSION ARM ASSY NO.1 LH(4WD)
	09703–30010	Brake Shoe Return Spring Tool	STABILIZER BAR REAR(4WD) UPPER CONTROL ARM ASSY(4WD)
	09710–04101	Base	REAR AXLE BEAM ASSY(FF)
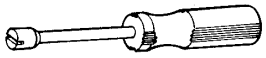	09718–00010	Shoe Hold Down Spring Driver	STABILIZER BAR REAR(4WD) UPPER CONTROL ARM ASSY(4WD)
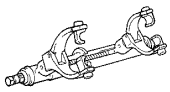	09727–30021	Coil Spring Compressor	REAR SHOCK ABSORBER WITH COIL SPRING(4WD) REAR SHOCK ABSORBER WITH COIL SPRING(FF)
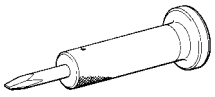	09930–00010	Drive Shaft Nut Chisel	STABILIZER BAR REAR(4WD) UPPER CONTROL ARM ASSY(4WD)
	09950–40011	Puller B Set	REAR SUSPENSION ARM ASSY NO.1 LH(4WD) REAR AXLE BEAM ASSY(FF)
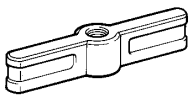	(09951–04010)	Hanger 150	REAR SUSPENSION ARM ASSY NO.1 LH(4WD)
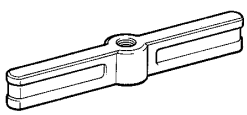	(09951–04020)	Hanger 200	REAR AXLE BEAM ASSY(FF)
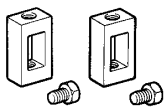	(09952–04010)	Slide Arm	REAR SUSPENSION ARM ASSY NO.1 LH(4WD) REAR AXLE BEAM ASSY(FF)

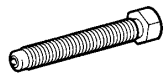	(09953–04010)	Center Bolt 100	REAR SUSPENSION ARM ASSY NO.1 LH(4WD)
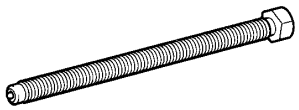	(09953–04030)	Center Bolt 200	REAR AXLE BEAM ASSY(FF)
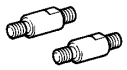	(09954–04010)	Arm 25	REAR SUSPENSION ARM ASSY NO.1 LH(4WD)
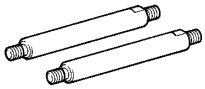	(09954–04020)	Arm 100	REAR AXLE BEAM ASSY(FF)
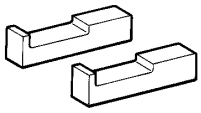	(09955–04051)	Claw No.5	REAR SUSPENSION ARM ASSY NO.1 LH(4WD) REAR AXLE BEAM ASSY(FF)
	(09957–04010)	Attachment	REAR SUSPENSION ARM ASSY NO.1 LH(4WD) REAR AXLE BEAM ASSY(FF)
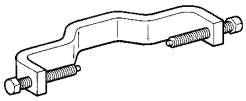	(09958–04011)	Holder	REAR SUSPENSION ARM ASSY NO.1 LH(4WD) REAR AXLE BEAM ASSY(FF)
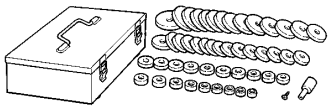	09950–60010	Replacer Set	REAR AXLE BEAM ASSY(FF)
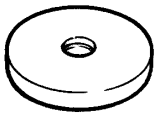	(09951–00620)	Replacer 62	REAR AXLE BEAM ASSY(FF)
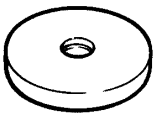	(09951–00630)	Replacer 63	REAR AXLE BEAM ASSY(FF)

Recomended Tools

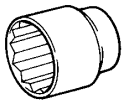	09011–12301	Socket Wrench 30 mm	STABILIZER BAR REAR(4WD) UPPER CONTROL ARM ASSY(4WD)
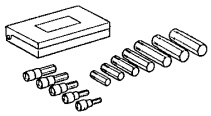	09040–00011	Hexagon Wrench Set	REAR SHOCK ABSORBER WITH COIL SPRING(FF)

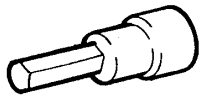	(09043–20050) Socket Hexagon Wrench 5	REAR SHOCK ABSORBER WITH COIL SPRING(4WD) REAR SUSPENSION ARM ASSY NO.1 LH(4WD) STABILIZER BAR REAR(4WD) UPPER CONTROL ARM ASSY(4WD)
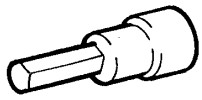	(09043–20060) Socket Hexagon Wrench 6	REAR SHOCK ABSORBER WITH COIL SPRING(4WD) STABILIZER BAR REAR(4WD) UPPER CONTROL ARM ASSY(4WD) REAR SHOCK ABSORBER WITH COIL SPRING(FF)

Equipment

Torque wrench	
Dial indicator magnetic base	
Wheel balancer	
Tire pressure gauge	
Alignment tester	
Toe–in gauge	
Camber–caster–kingpin gauge	
Drill	

PARKING BRAKE

021D3–01

PREPARATION

SST

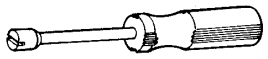	09718–00010	Shoe Hold Down Spring Driver	PARKING BRAKE ASSY(2ZZ–GE) PARKING BRAKE CABLE ASSY NO.3(4WD) PARKING BRAKE CABLE ASSY NO.3(FF)
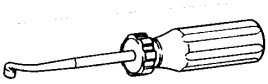	09921–00010	Spring Tension Tool	PARKING BRAKE CABLE ASSY NO.3(FF)

Equipment

Torque wrench	
Slide calipers	

VEHICLE CONTROL SYSTEM

021D1–01

PREPARATION

Recomended Tools

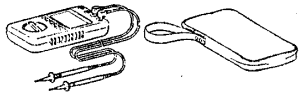	09082–00040 TOYOTA Electrical Tester	IGNITION OR STARTER SWITCH ASSY

THEFT DETERRENT & DOOR LOCK

021E3–01

PREPARATION

Recomended Tools

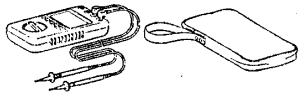	09082–00040 TOYOTA Electrical Tester	POWER DOOR LOCK CONTROL SYSTEM GLASS HATCH OPENER SYSTEM

BRAKE

PREPARATION

021D4–01

SST

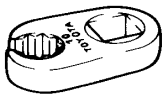	09023–00100	Union Nut Wrench 10 mm	BRAKE FLUID BRAKE MASTER CYLINDER SUB–ASSY FRONT BRAKE BRAKE ACTUATOR ASSY PROPORTIONING VALVE ASSY REAR DISC BRAKE BRAKE BOOSTER ASSY REAR DRUM BRAKE(1ZZ–FE(4WD)) REAR DRUM BRAKE(1ZZ–FE(FF))
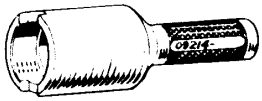	09214–76011	Crankshaft Pulley Replacer	SKID CONTROL SENSOR(FF)
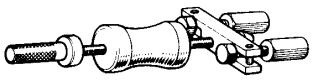	09520–00031	Rear Axle Shaft Puller	SKID CONTROL SENSOR(FF)
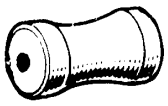	(09520–00040)	Shocker	SKID CONTROL SENSOR(FF)
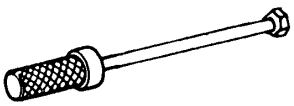	09521–00020	Drive Shaft Boot Clamping Tool	SKID CONTROL SENSOR(FF)
	09703–30010	Brake Shoe Return Spring Tool	REAR DRUM BRAKE(1ZZ–FE(4WD))
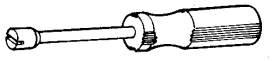	09718–00010	Shoe Hold Down Spring Driver	REAR DRUM BRAKE(1ZZ–FE(4WD)) REAR DRUM BRAKE(1ZZ–FE(FF))
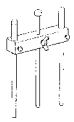	09737–00012	Brake Booster Push Rod Gauge	BRAKE MASTER CYLINDER SUB–ASSY
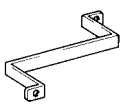	09737–00020	Brake Booster Push Rod Wrench	BRAKE MASTER CYLINDER SUB–ASSY
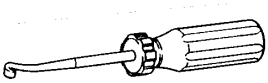	09921–00010	Spring Tension Tool	REAR DRUM BRAKE(1ZZ–FE(FF))
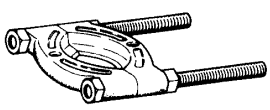	09950–00020	Bearing Remover	SKID CONTROL SENSOR(FF)

Recomended Tools

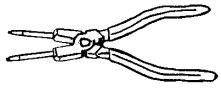	09905–00013 Snap Ring Pliers	BRAKE MASTER CYLINDER SUB–ASSY

Equipment

Ruler	
Dial indicator	
Micrometer	
Torque wrench	
Brake drum gauge	

Lubricant

Item	Capacity	Classification
Brake fluid	–	SAE J1703 or FMVSS No. 116 DOT3

STEERING COLUMN

021DL–01

PREPARATION

SST

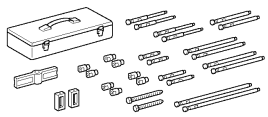	09950–50013	Puller C Set	STEERING COLUMN ASSY
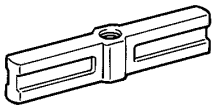	(09951–05010)	Hanger 150	STEERING COLUMN ASSY
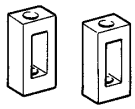	(09952–05010)	Slide Arm	STEERING COLUMN ASSY
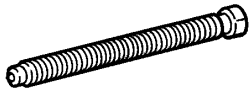	(09953–05020)	Center Bolt 150	STEERING COLUMN ASSY
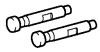	(09954–05021)	Claw No.2	STEERING COLUMN ASSY

Recomended Tools

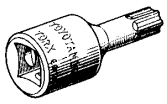	09042–00010	Torx Socket T30	STEERING COLUMN ASSY

Equipment

Torque wrench	

POWER STEERING

021DM–01

PREPARATION

SST

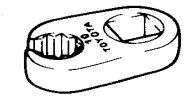	09023–38200	Union Nut Wrench 12mm	RACK & PINION POWER STEERING GEAR ASSY
	09023–38400	Union Nut Wrench 14mm	VANE PUMP ASSY RACK & PINION POWER STEERING GEAR ASSY
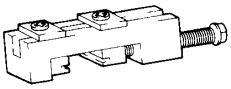	09521–24010	Rear Axle Shaft Puller	RACK & PINION POWER STEERING GEAR ASSY
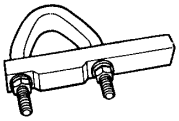	09612–00012	Rack & Pinion Steering Rack Housing Stand	RACK & PINION POWER STEERING GEAR ASSY
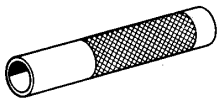	09612–22011	Tilt Handle Bearing Replacer	RACK & PINION POWER STEERING GEAR ASSY
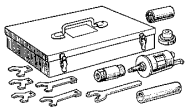	09612–24014	Steering Gear Housing Overhaul Tool Set	RACK & PINION POWER STEERING GEAR ASSY
	(09612–10061)	Steering Pinion Bearing Replacer	RACK & PINION POWER STEERING GEAR ASSY
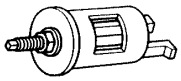	(09613–22011)	Steering Rack Shaft Bushing Puller	RACK & PINION POWER STEERING GEAR ASSY
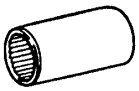	09616–00011	Steering Worm Bearing Adjusting Socket	RACK & PINION POWER STEERING GEAR ASSY
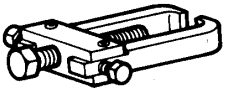	09628–62011	Boll Joint Puller	RACK & PINION POWER STEERING GEAR ASSY
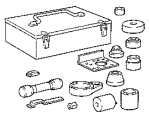	09630–00014	Power Steering Gear Housing Overhaul Tool Set	VANE PUMP ASSY
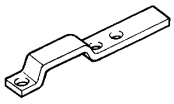	(09631–00132)	Vane Pump Bracket	VANE PUMP ASSY

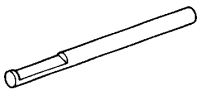	09631–10030	Oil Seal Remover	VANE PUMP ASSY
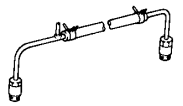	09631–12071	Steering Rack Oil Seal Test Tool	RACK & PINION POWER STEERING GEAR ASSY
	(09633–00010)	Packing	RACK & PINION POWER STEERING GEAR ASSY
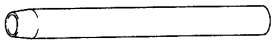	09631–16020	Steering Rack Cover ”A”	RACK & PINION POWER STEERING GEAR ASSY
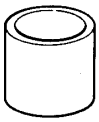	09631–20081	Seal Ring Tool	RACK & PINION POWER STEERING GEAR ASSY
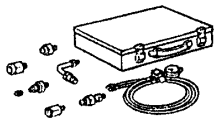	09640–10010	Power Steering Pressure Gauge Set	POWER STEERING SYSTEM
	(09641–01010)	Gauge Assy	POWER STEERING SYSTEM
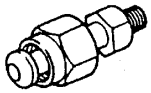	(09641–01020)	Attachment A	POWER STEERING SYSTEM
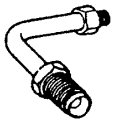	(09641–01030)	Attachment B	POWER STEERING SYSTEM
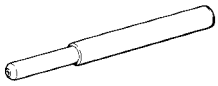	09670–00010	Front Crossmember Guide Tool	RACK & PINION POWER STEERING GEAR ASSY
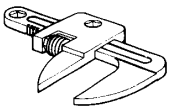	09922–10010	Variable Open Wrench	RACK & PINION POWER STEERING GEAR ASSY
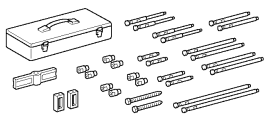	09950–50013	Puller C Set	RACK & PINION POWER STEERING GEAR ASSY
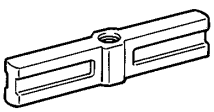	(09951–05010)	Hanger 150	RACK & PINION POWER STEERING GEAR ASSY

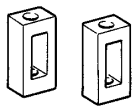	(09952–05010) Slide Arm	RACK & PINION POWER STEERING GEAR ASSY
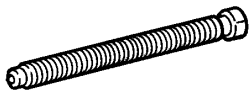	(09953–05020) Center Bolt 150	RACK & PINION POWER STEERING GEAR ASSY
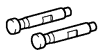	(09954–05021) Claw No.2	RACK & PINION POWER STEERING GEAR ASSY
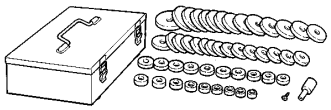	09950–60010 Replacer Set	VANE PUMP ASSY RACK & PINION POWER STEERING GEAR ASSY
	(09951–00180) Replacer 18	RACK & PINION POWER STEERING GEAR ASSY
	(09951–00190) Replacer 19	RACK & PINION POWER STEERING GEAR ASSY
	(09951–00220) Replacer 22	RACK & PINION POWER STEERING GEAR ASSY
	(09951–00240) Replacer 24	RACK & PINION POWER STEERING GEAR ASSY
	(09951–00260) Replacer 26	RACK & PINION POWER STEERING GEAR ASSY
	(09951–00280) Replacer 28	VANE PUMP ASSY RACK & PINION POWER STEERING GEAR ASSY
	(09951–00320) Replacer 32	RACK & PINION POWER STEERING GEAR ASSY
	(09951–00360) Replacer 36	RACK & PINION POWER STEERING GEAR ASSY
	(09951–00400) Replacer 40	RACK & PINION POWER STEERING GEAR ASSY

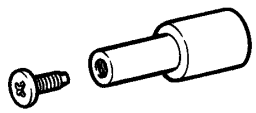	(09952–06010)	Adapter	RACK & PINION POWER STEERING GEAR ASSY
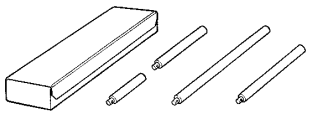	09950–70010	Handle Set	VANE PUMP ASSY RACK & PINION POWER STEERING GEAR ASSY
	(09951–07100)	Handle 100	VANE PUMP ASSY RACK & PINION POWER STEERING GEAR ASSY
	(09951–07150)	Handle 150	RACK & PINION POWER STEERING GEAR ASSY
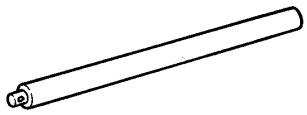	(09951–07360)	Handle 360	RACK & PINION POWER STEERING GEAR ASSY

Recomended Tools

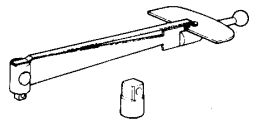	09025–00010	Torque Wrench (30 kgf–cm)	VANE PUMP ASSY RACK & PINION POWER STEERING GEAR ASSY
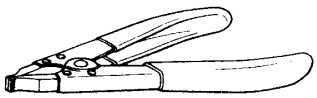	09905–00012	Snap Ring No.1 Expander	VANE PUMP ASSY

Equipment

Caliper gauge	Vane pump assy
Vernier calipers	Vane pump assy
Dial indicator	Steering gear assy
Feeler gauge	Vane pump assy
Micrometer	Vane pump assy
Torque wrench	

Lubricant

Item	Capacity	Classification
Power steering fluid (Total)	0.8 liters (0.9 US qts, 0.7 lmp.qts)	ATF DEXRON® II or III

SSM

	08833–00080	Adhesive 1344 THREE BOND 1344 LOCTITE 242 or equivalent	RACK & PINION POWER STEERING GEAR ASSY

CRUISE CONTROL

021BU–01

PREPARATION

SST

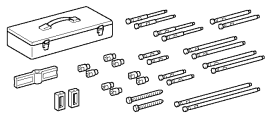	09950–50013	Puller C Set	CRUISE CONTROL MAIN SWITCH ASSY
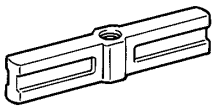	(09951–05010)	Hanger 150	CRUISE CONTROL MAIN SWITCH ASSY
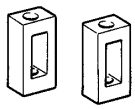	(09952–05010)	Slide Arm	CRUISE CONTROL MAIN SWITCH ASSY
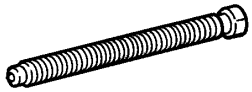	(09953–05020)	Center Bolt 150	CRUISE CONTROL MAIN SWITCH ASSY
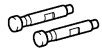	(09954–05021)	Claw No.2	CRUISE CONTROL MAIN SWITCH ASSY

Recomended Tools

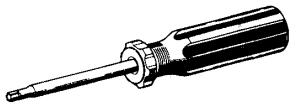	09041–00030	Torx Driver T30	INSTRUMENT PANEL SAFETY PAD SUB–ASSY
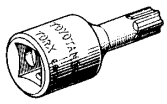	09042–00010	Torx Socket T30	INSTRUMENT PANEL SAFETY PAD SUB–ASSY

Equipment

Torque wrench	
Adhesive Tape	

SEAT BELT

021DY–01

PREPARATION

SST

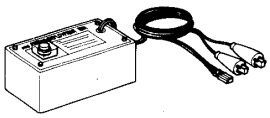	09082–00700	SRS Airbag Deployment Tool	FRONT SEAT BELT
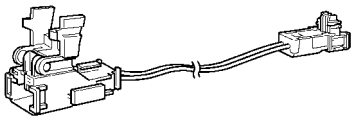	09082–00770	Airbag Deployment Wire Sub–harness No.5	FRONT SEAT BELT

Recomended Tools

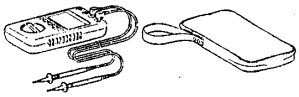	09082–00040	TOYOTA Electrical Tester	SEAT BELT WARNING SYSTEM

Equipment

Torque wrench	

SEAT

021CX–01

PREPARATION

Equipment

Hog ring pliers	
Hog ring	
Torque wrench	
Tape	To avoid surface damage

ENGINE MECHANICAL

PREPARATION

021E0–01

SST

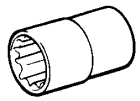	09011–38121	12 mm Socket Wrench for 12 Pointed Head	CYLINDER BLOCK(1ZZ–FE) CYLINDER BLOCK(2ZZ–GE)
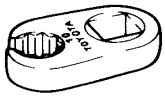	09023–38200	Union Nut Wrench 12mm	PARTIAL ENGINE ASSY(1ZZ–FE)
	09032–00100	Oil Pan Seal Cutter	PARTIAL ENGINE ASSY(1ZZ–FE) PARTIAL ENGINE ASSY(2ZZ–GE)
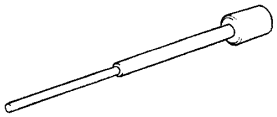	09201–01055	Valve Guide Bushing Remover & Replacer 5.5	CYLINDER HEAD ASSY(1ZZ–FE) CYLINDER HEAD ASSY(2ZZ–GE)
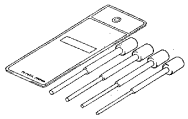	09201–10000	Valve Guide Bushing Remover & Replacer Set	CYLINDER HEAD ASSY(1ZZ–FE) CYLINDER HEAD ASSY(2ZZ–GE)
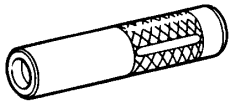	09201–41020	Valve Stem Oil Seal Replacer	CYLINDER HEAD ASSY(1ZZ–FE) CYLINDER HEAD ASSY(2ZZ–GE)
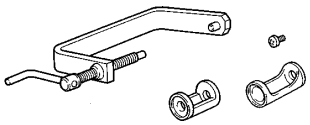	09202–70020	Valve Spring Compressor	CYLINDER HEAD ASSY(1ZZ–FE) CYLINDER HEAD ASSY(2ZZ–GE)
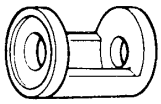	(09202–00010)	Attachment	CYLINDER HEAD ASSY(1ZZ–FE)
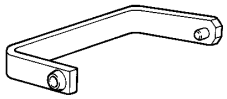	(09202–01010)	Arm	CYLINDER HEAD ASSY(1ZZ–FE)
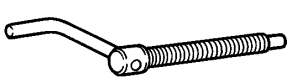	(09202–01020)	Set Bolt	CYLINDER HEAD ASSY(1ZZ–FE)
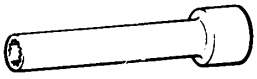	09205–16010	Cylinder Head Bolt Wrench	CYLINDER BLOCK(1ZZ–FE) CYLINDER BLOCK(2ZZ–GE)
	09213–70011	Crankshaft Pully Holding Tool	PARTIAL ENGINE ASSY(2ZZ–GE) CHAIN SUB–ASSY(2ZZ–GE) TIMING GEAR COVER OIL SEAL(2ZZ–GE) ENGINE REAR OIL SEAL(2ZZ–GE) CYLINDER HEAD GASKET(2ZZ–GE)

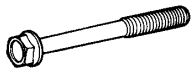	(09213–70020)	Bolt	PARTIAL ENGINE ASSY(2ZZ–GE) CHAIN SUB–ASSY(2ZZ–GE) TIMING GEAR COVER OIL SEAL(2ZZ–GE) ENGINE REAR OIL SEAL(2ZZ–GE) CYLINDER HEAD GASKET(2ZZ–GE)
	09223–15020	Oil Seal & Bearing Replacer	ENGINE REAR OIL SEAL(1ZZ–FE) PARTIAL ENGINE ASSY(1ZZ–FE)
	09223–15030	Oil Seal & Bearing Replacer	PARTIAL ENGINE ASSY(2ZZ–GE) ENGINE REAR OIL SEAL(2ZZ–GE)
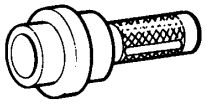	09223–22010	Crankshaft Front Oil Seal Replacer	CHAIN SUB–ASSY(1ZZ–FE) TIMING GEAR COVER OIL SEAL(1ZZ–FE) CYLINDER HEAD GASKET(1ZZ–FE) PARTIAL ENGINE ASSY(1ZZ–FE) PARTIAL ENGINE ASSY(2ZZ–GE) CHAIN SUB–ASSY(2ZZ–GE) TIMING GEAR COVER OIL SEAL(2ZZ–GE) CYLINDER HEAD GASKET(2ZZ–GE)
	09224–00010	O2 Sensor Wrench	PARTIAL ENGINE ASSY(1ZZ–FE)
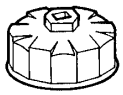	09228–06501	Oil Filter Wrench	PARTIAL ENGINE ASSY(1ZZ–FE) PARTIAL ENGINE ASSY(2ZZ–GE)
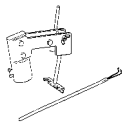	09248–77010	Valve Clearance Adjusting Compressor Set	PARTIAL ENGINE ASSY(2ZZ–GE) VALVE CLEARANCE(2ZZ–GE)
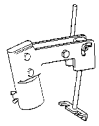	(09248–07010)	Valve Clearance Adjusting Compressor	PARTIAL ENGINE ASSY(2ZZ–GE) VALVE CLEARANCE(2ZZ–GE)
	09268–21010	Fuel Hose Puller	CYLINDER HEAD GASKET(1ZZ–FE)
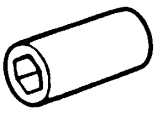	09268–46021	Nozzle Holder Retaining Nut Wrench	PARTIAL ENGINE ASSY(1ZZ–FE) PARTIAL ENGINE ASSY(2ZZ–GE)
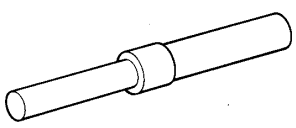	09301–00210	Clutch Guide Tool	PARTIAL ENGINE ASSY(1ZZ–FE) PARTIAL ENGINE ASSY(2ZZ–GE) ENGINE REAR OIL SEAL(2ZZ–GE)

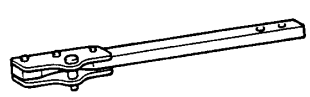	09330–00021	Companion Flange Holding Tool	PARTIAL ENGINE ASSY(2ZZ–GE) CHAIN SUB–ASSY(2ZZ–GE) TIMING GEAR COVER OIL SEAL(2ZZ–GE) ENGINE REAR OIL SEAL(2ZZ–GE) CYLINDER HEAD GASKET(2ZZ–GE)
	09520–01010	Drive Shaft Remover Attachment	PARTIAL ENGINE ASSY(2ZZ–GE)
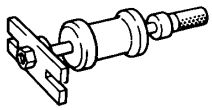	09520–24010	Differential Side Gear Shaft Puller	PARTIAL ENGINE ASSY(2ZZ–GE)
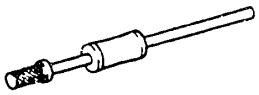	(09520–32040)	Shocker Set	PARTIAL ENGINE ASSY(2ZZ–GE)
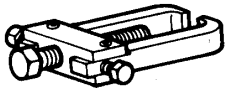	09628–62011	Boll Joint Puller	PARTIAL ENGINE ASSY(1ZZ–FE) PARTIAL ENGINE ASSY(2ZZ–GE)
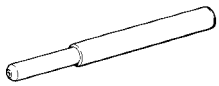	09670–00010	Front Crossmember Guide Tool	PARTIAL ENGINE ASSY(1ZZ–FE) PARTIAL ENGINE ASSY(2ZZ–GE)
	09817–33190	Sensor Socket Wrench	PARTIAL ENGINE ASSY(1ZZ–FE) PARTIAL ENGINE ASSY(2ZZ–GE)
	09843–18040	Diagnosis Check Wire No.2	ENGINE ASSEMBLY(1ZZ–FE) CYLINDER HEAD GASKET(1ZZ–FE) PARTIAL ENGINE ASSY(1ZZ–FE) ENGINE ASSEMBLY(2ZZ–GE) PARTIAL ENGINE ASSY(2ZZ–GE) CYLINDER HEAD GASKET(2ZZ–GE)
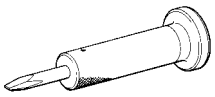	09930–00010	Drive Shaft Nut Chisel	PARTIAL ENGINE ASSY(1ZZ–FE) PARTIAL ENGINE ASSY(2ZZ–GE)
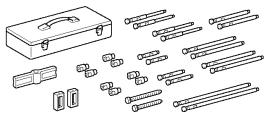	09950–50013	Puller C Set	PARTIAL ENGINE ASSY(2ZZ–GE) CHAIN SUB–ASSY(2ZZ–GE) TIMING GEAR COVER OIL SEAL(2ZZ–GE) CYLINDER HEAD GASKET(2ZZ–GE)
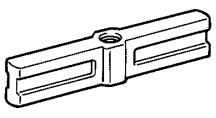	(09951–05010)	Hanger 150	PARTIAL ENGINE ASSY(2ZZ–GE) CHAIN SUB–ASSY(2ZZ–GE) TIMING GEAR COVER OIL SEAL(2ZZ–GE) CYLINDER HEAD GASKET(2ZZ–GE)
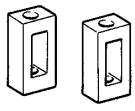	(09952–05010)	Slide Arm	PARTIAL ENGINE ASSY(2ZZ–GE) CHAIN SUB–ASSY(2ZZ–GE) TIMING GEAR COVER OIL SEAL(2ZZ–GE) CYLINDER HEAD GASKET(2ZZ–GE)

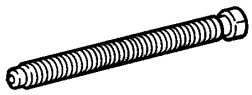	(09953–05020)	Center Bolt 150	PARTIAL ENGINE ASSY(2ZZ–GE) CHAIN SUB–ASSY(2ZZ–GE) TIMING GEAR COVER OIL SEAL(2ZZ–GE) CYLINDER HEAD GASKET(2ZZ–GE)
	(09954–05021)	Claw No.2	PARTIAL ENGINE ASSY(2ZZ–GE) CHAIN SUB–ASSY(2ZZ–GE) TIMING GEAR COVER OIL SEAL(2ZZ–GE) CYLINDER HEAD GASKET(2ZZ–GE)
	(09957–04010)	Attachment	CHAIN SUB–ASSY(2ZZ–GE) TIMING GEAR COVER OIL SEAL(2ZZ–GE) CYLINDER HEAD GASKET(2ZZ–GE)
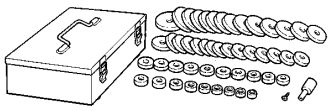	09950–60010	Replacer Set	CYLINDER HEAD ASSY(2ZZ–GE) CYLINDER BLOCK(2ZZ–GE)
	(09951–00250)	Replacer 25	CYLINDER BLOCK(2ZZ–GE)
	(09951–00350)	Replacer 35	CYLINDER HEAD ASSY(2ZZ–GE)
	(09951–00450)	Replacer 45	CYLINDER BLOCK(2ZZ–GE)
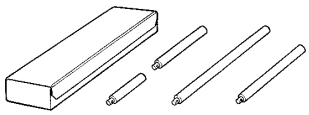	09950–70010	Handle Set	ENGINE REAR OIL SEAL(1ZZ–FE) PARTIAL ENGINE ASSY(1ZZ–FE) CYLINDER HEAD ASSY(1ZZ–FE) PARTIAL ENGINE ASSY(2ZZ–GE) CYLINDER HEAD ASSY(2ZZ–GE) CYLINDER BLOCK(2ZZ–GE) ENGINE REAR OIL SEAL(2ZZ–GE)
	(09951–07100)	Handle 100	ENGINE REAR OIL SEAL(1ZZ–FE) PARTIAL ENGINE ASSY(1ZZ–FE) CYLINDER HEAD ASSY(1ZZ–FE) PARTIAL ENGINE ASSY(2ZZ–GE) CYLINDER HEAD ASSY(2ZZ–GE) CYLINDER BLOCK(2ZZ–GE) ENGINE REAR OIL SEAL(2ZZ–GE)
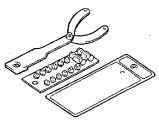	09960–10010	Variable Pin Wrench Set	CHAIN SUB–ASSY(1ZZ–FE) TIMING GEAR COVER OIL SEAL(1ZZ–FE) ENGINE REAR OIL SEAL(1ZZ–FE) CYLINDER HEAD GASKET(1ZZ–FE) PARTIAL ENGINE ASSY(1ZZ–FE) PARTIAL ENGINE ASSY(2ZZ–GE) CHAIN SUB–ASSY(2ZZ–GE) CYLINDER HEAD GASKET(2ZZ–GE)

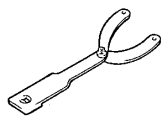	(09962–01000)	Variable Pin Wrench Arm Assy	CHAIN SUB–ASSY(1ZZ–FE) TIMING GEAR COVER OIL SEAL(1ZZ–FE) ENGINE REAR OIL SEAL(1ZZ–FE) CYLINDER HEAD GASKET(1ZZ–FE) PARTIAL ENGINE ASSY(1ZZ–FE) PARTIAL ENGINE ASSY(2ZZ–GE) CHAIN SUB–ASSY(2ZZ–GE)
	(09963–00600)	Pin 6	PARTIAL ENGINE ASSY(2ZZ–GE) CHAIN SUB–ASSY(2ZZ–GE)
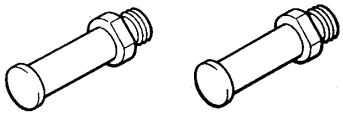	(09963–01000)	Pin 10	CHAIN SUB–ASSY(1ZZ–FE) TIMING GEAR COVER OIL SEAL(1ZZ–FE) ENGINE REAR OIL SEAL(1ZZ–FE) CYLINDER HEAD GASKET(1ZZ–FE) PARTIAL ENGINE ASSY(1ZZ–FE)
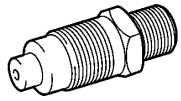	09992–00500	Compression Gauge Attachment	ENGINE ASSEMBLY(1ZZ–FE) CYLINDER HEAD GASKET(1ZZ–FE) ENGINE ASSEMBLY(2ZZ–GE) CYLINDER HEAD GASKET(2ZZ–GE)

Recomended Tools

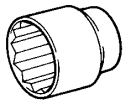	09011–12301	Socket Wrench 30 mm	PARTIAL ENGINE ASSY(1ZZ–FE) PARTIAL ENGINE ASSY(2ZZ–GE)
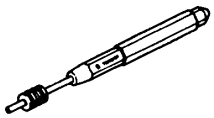	09031–00040	Pin Punch .	CYLINDER HEAD ASSY(1ZZ–FE) CYLINDER HEAD ASSY(2ZZ–GE)
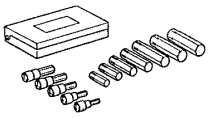	09040–00011	Hexagon Wrench Set	PARTIAL ENGINE ASSY(1ZZ–FE) PARTIAL ENGINE ASSY(2ZZ–GE) CYLINDER HEAD ASSY(2ZZ–GE)
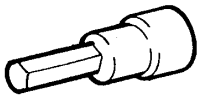	(09043–20050)	Socket Hexagon Wrench 5	PARTIAL ENGINE ASSY(1ZZ–FE) PARTIAL ENGINE ASSY(2ZZ–GE)
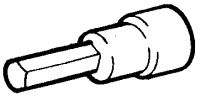	(09043–20100)	Socket Hexagon Wrench 10	PARTIAL ENGINE ASSY(1ZZ–FE) CYLINDER HEAD ASSY(1ZZ–FE) PARTIAL ENGINE ASSY(2ZZ–GE) CYLINDER HEAD ASSY(2ZZ–GE)
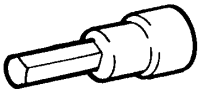	(09043–20120)	Socket Hexagon Wrench 12	PARTIAL ENGINE ASSY(1ZZ–FE)
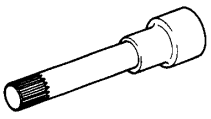	09043–50100	Bi–hexagon Wrench 10 mm	PARTIAL ENGINE ASSY(1ZZ–FE) PARTIAL ENGINE ASSY(2ZZ–GE) CYLINDER HEAD GASKET(2ZZ–GE)
	09090–04020	Engine Sling Device	PARTIAL ENGINE ASSY(1ZZ–FE) PARTIAL ENGINE ASSY(2ZZ–GE)

SSM

	08826–00080	Seal Packing Black or equivalent (FIPG)	CHAIN SUB–ASSY(1ZZ–FE) CAMSHAFT(1ZZ–FE) CYLINDER HEAD GASKET(1ZZ–FE) VALVE CLEARANCE(1ZZ–FE) PARTIAL ENGINE ASSY(1ZZ–FE) CYLINDER BLOCK(1ZZ–FE) PARTIAL ENGINE ASSY(2ZZ–GE) CYLINDER BLOCK(2ZZ–GE) CHAIN SUB–ASSY(2ZZ–GE) CAMSHAFT(2ZZ–GE) CYLINDER HEAD GASKET(2ZZ–GE) VALVE CLEARANCE(2ZZ–GE)
	08826–00100	”Seal Packing 1282B,” THREE BOND 1282B or equivalent (FIPG)	PARTIAL ENGINE ASSY(1ZZ–FE) PARTIAL ENGINE ASSY(2ZZ–GE) CYLINDER HEAD GASKET(2ZZ–GE)
	08833–00070	”Adhesive 1324,” THREE BOND 1324 or equivalent	ENGINE REAR OIL SEAL(1ZZ–FE) PARTIAL ENGINE ASSY(1ZZ–FE) CYLINDER HEAD ASSY(1ZZ–FE) PARTIAL ENGINE ASSY(2ZZ–GE) CYLINDER HEAD ASSY(2ZZ–GE) CYLINDER BLOCK(2ZZ–GE) ENGINE REAR OIL SEAL(2ZZ–GE)
	08833–00080	Adhesive 1344 THREE BOND 1344 LOCTITE 242 or equivalent	CYLINDER BLOCK(1ZZ–FE)

Equipment

Alignment tester	
Caliper gauge	
Chain Block	
CO/HC meter	
Compression gauge	
Connecting rod aligner	
Cylinder gauge	
Dial indicator	
Feeler gauge	
Heater	
Hexagon wrench (5mm)	
Micrometer	
OBD II scan tool	
Piston ring compressor	
Piston ring expander	
Plastic Hammer	
Plastigage	
Precision straight edge	
Radiator cap tester	
Reamer	
Sandpaper (#400)	
Slide calipers	
Steel square	
Straight edge	
Spring tester	

Spring tension gauge	
Tire pressure gauge	
Toe–in gauge	
Torque wrench	
Universal engine lifter	
Valve seat cutter	
Vernier calipers	
V–block	
Wooden block	

FUEL

PREPARATION

021BJ–01

SST

	09268–21010	Fuel Hose Puller	FUEL INJECTOR ASSY(1ZZ–FE)
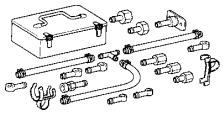	09268–41047	Injection Measuring Tool Set	FUEL SYSTEM
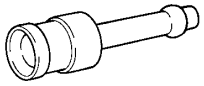	(09268–41110)	Adaptor	FUEL SYSTEM
	(09268–41300)	Clamp	FUEL SYSTEM
	(95336–08070)	Hose	FUEL SYSTEM
	09842–30080	Wire ”H” EFI Inspection	FUEL SYSTEM

Recomended Tools

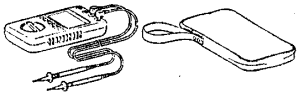	09082–00040	TOYOTA Electrical Tester	FUEL SYSTEM
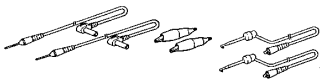	(09083–00150)	Test Lead Set	FUEL SYSTEM

SSM

	08850–00065	Butyl Tape Set	FUEL PUMP ASSY(4WD) FUEL PUMP ASSY(FF) FUEL TANK ASSY(FF)

Equipment

Service wire harness	
Stopwatch	
Measuring flask	
Torque wrench	
Vernier calipers	
Clip	

HEATER & AIR CONDITIONER

021DR–01

PREPARATION

SST

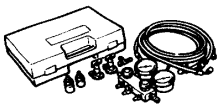	07110–58060	Air Conditioner Service Tool Set	REFRIGERANT AIR CONDITIONING UNIT ASSY W/RECEIVER CONDENSER ASSY COOLER COMPRESSOR ASSY(1ZZ–FE) COOLER COMPRESSOR ASSY(2ZZ–GE)
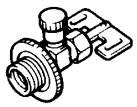	(07117–58060)	Refrigerant Drain Service Valve	REFRIGERANT AIR CONDITIONING UNIT ASSY W/RECEIVER CONDENSER ASSY COOLER COMPRESSOR ASSY(1ZZ–FE) COOLER COMPRESSOR ASSY(2ZZ–GE)
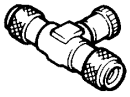	(07117–58070)	T–Joint	REFRIGERANT AIR CONDITIONING UNIT ASSY W/RECEIVER CONDENSER ASSY COOLER COMPRESSOR ASSY(1ZZ–FE) COOLER COMPRESSOR ASSY(2ZZ–GE)
	(07117–58080)	Quick Disconnect Adapter	REFRIGERANT AIR CONDITIONING UNIT ASSY W/RECEIVER CONDENSER ASSY COOLER COMPRESSOR ASSY(1ZZ–FE) COOLER COMPRESSOR ASSY(2ZZ–GE)
	(07117–58090)	Quick Disconnect Adapter	REFRIGERANT AIR CONDITIONING UNIT ASSY W/RECEIVER CONDENSER ASSY COOLER COMPRESSOR ASSY(1ZZ–FE) COOLER COMPRESSOR ASSY(2ZZ–GE)
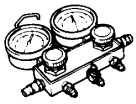	(07117–78050)	Refrigerant Charging Gauge	REFRIGERANT AIR CONDITIONING UNIT ASSY W/RECEIVER CONDENSER ASSY COOLER COMPRESSOR ASSY(1ZZ–FE) COOLER COMPRESSOR ASSY(2ZZ–GE)
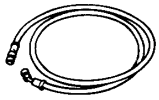	(07117–88060)	Refrigerant Charging Hose	REFRIGERANT AIR CONDITIONING UNIT ASSY W/RECEIVER CONDENSER ASSY COOLER COMPRESSOR ASSY(1ZZ–FE) COOLER COMPRESSOR ASSY(2ZZ–GE)

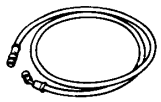	(07117–88070)	Refrigerant Charging Hose	REFRIGERANT AIR CONDITIONING UNIT ASSY W/RECEIVER CONDENSER ASSY COOLER COMPRESSOR ASSY(1ZZ–FE) COOLER COMPRESSOR ASSY(2ZZ–GE)
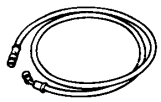	(07117–88080)	Refrigerant Charging Hose	REFRIGERANT AIR CONDITIONING UNIT ASSY W/RECEIVER CONDENSER ASSY COOLER COMPRESSOR ASSY(1ZZ–FE) COOLER COMPRESSOR ASSY(2ZZ–GE)
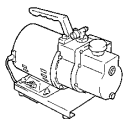	07117–48130	Vacuum Pump (220 V)	REFRIGERANT AIR CONDITIONING UNIT ASSY W/RECEIVER CONDENSER ASSY COOLER COMPRESSOR ASSY(1ZZ–FE) COOLER COMPRESSOR ASSY(2ZZ–GE)
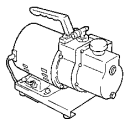	07117–48140	Vacuum Pump (240 V)	REFRIGERANT AIR CONDITIONING UNIT ASSY W/RECEIVER CONDENSER ASSY COOLER COMPRESSOR ASSY(1ZZ–FE) COOLER COMPRESSOR ASSY(2ZZ–GE)
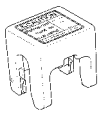	09870–00015	A/C Quick Joint Puller No.1	AIR CONDITIONING UNIT ASSY
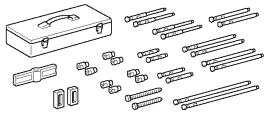	09950–50013	Puller C Set	AIR CONDITIONING UNIT ASSY
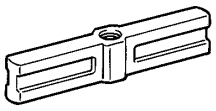	(09951–05010)	Hanger 150	AIR CONDITIONING UNIT ASSY
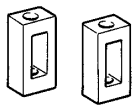	(09952–05010)	Slide Arm	AIR CONDITIONING UNIT ASSY
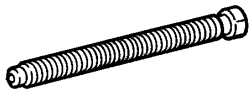	(09953–05020)	Center Bolt 150	AIR CONDITIONING UNIT ASSY
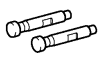	(09954–05021)	Claw No.2	AIR CONDITIONING UNIT ASSY

Recomended Tools

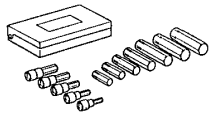	09040–00011	Hexagon Wrench Set	AIR CONDITIONING UNIT ASSY W/RECEIVER CONDENSER ASSY
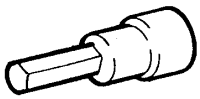	(09043–20050)	Socket Hexagon Wrench 5	AIR CONDITIONING UNIT ASSY
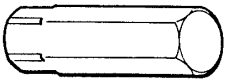	(09043–30140)	Straight Hexagon Wrench 14	W/RECEIVER CONDENSER ASSY
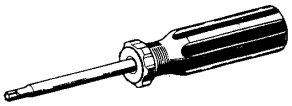	09041–00010	Torx Driver T20	W/RECEIVER CONDENSER ASSY
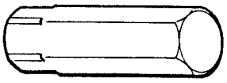	(09043–30140)	Straight Hexagon Wrench 14	W/RECEIVER CONDENSER ASSY
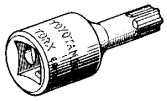	09042–00010	Torx Socket T30	AIR CONDITIONING UNIT ASSY
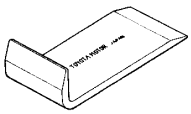	09070–20010	Moulding Remover	AIR CONDITIONING UNIT ASSY
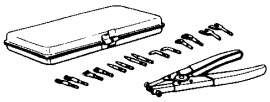	09904–00010	Expander Set	COOLER COMPRESSOR ASSY(1ZZ–FE) COOLER COMPRESSOR ASSY(2ZZ–GE)
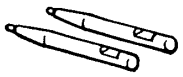	(09904–00050)	No. 4 Claw	COOLER COMPRESSOR ASSY(1ZZ–FE) COOLER COMPRESSOR ASSY(2ZZ–GE)
	95416–00140	Gas Leak Detector (Halogen Leak Detector) (DENSO Part No.)	REFRIGERANT AIR CONDITIONING UNIT ASSY W/RECEIVER CONDENSER ASSY COOLER COMPRESSOR ASSY(1ZZ–FE) COOLER COMPRESSOR ASSY(2ZZ–GE)

Equipment

Voltmeter	
Anmeter	
Ohmmeter	
Vinyl tape	
Hexagon wrench 5 mm (0.20 in.)	
Hexagon wrench 14 mm (0.55 in.)	
Vise pliers	
Gas leak detector	
Dial indicator with magnetic base	
Radiator cap tester	
Torque wrench	

Lubricant

Item	Capacity	Classification
Compressor oil	–	ND–OIL 8 or equivalent

TRANSFER

PREPARATION

021DT–01

SST

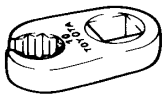	09023–38200	Union Nut Wrench 12mm	TRANSFER CASE OIL SEAL(U341F) TRANSFER ASSY(U341F)
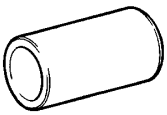	09223–00010	Cover & Seal Replacer	TRANSFER ASSY(U341F)
	09308–00010	Oil Seal Puller	TRANSFER CASE OIL SEAL(U341F) TRANSFER ASSY(U341F) TRANSFER CASE RH OIL SEAL(U341F) TRANSFER EXTENSION HOUSING TYPE T OIL SEAL(U341F)
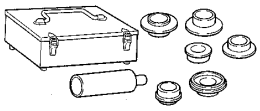	09316–60011	Transmission & Transfer Bearing Replacer	TRANSFER CASE OIL SEAL(U341F) TRANSFER ASSY(U341F)
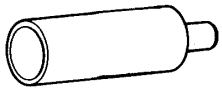	(09316–00011)	Replacer Pipe	TRANSFER CASE OIL SEAL(U341F) TRANSFER ASSY(U341F)
	09325–20010	Transmission Oil Plug	TRANSFER EXTENSION HOUSING TYPE T OIL SEAL(U341F)
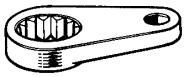	09326–20011	Output Shaft Bearing Lock Nut Wrench	TRANSFER ASSY(U341F)
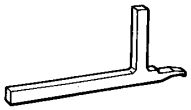	09504–22011	Differential Side Bearing Replacer	TRANSFER ASSY(U341F)
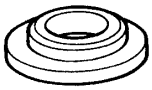	09506–30012	Differential Drive Pinion Rear Bearing Cone Replacer	TRANSFER ASSY(U341F)
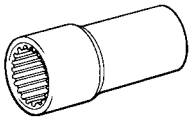	09556–16030	Differential Drive Pinion Holding Tool 28	TRANSFER ASSY(U341F)
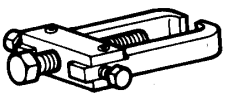	09628–62011	Boll Joint Puller	TRANSFER CASE OIL SEAL(U341F) TRANSFER ASSY(U341F)
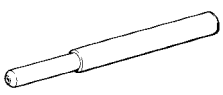	09670–00010	Front Crossmember Guide Tool	TRANSFER CASE OIL SEAL(U341F) TRANSFER ASSY(U341F)

	09726–40010	Lower Control Shaft Bearing Replacer	TRANSFER ASSY(U341F)
	09843–18030	Tacho–pulse Pickup Wire No.2	TRANSFER CASE OIL SEAL(U341F) TRANSFER ASSY(U341F)
	09843–18040	Diagnosis Check Wire No.2	TRANSFER CASE OIL SEAL(U341F) TRANSFER ASSY(U341F)
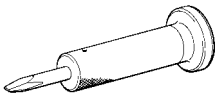	09930–00010	Drive Shaft Nut Chisel	TRANSFER CASE OIL SEAL(U341F) TRANSFER ASSY(U341F) TRANSFER CASE RH OIL SEAL(U341F)
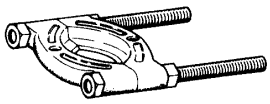	09950–00020	Bearing Remover	TRANSFER ASSY(U341F)
	09950–40011	Puller B Set	TRANSFER ASSY(U341F)
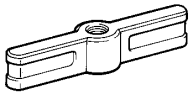	(09951–04010)	Hanger 150	TRANSFER ASSY(U341F)
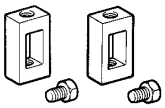	(09952–04010)	Slide Arm	TRANSFER ASSY(U341F)
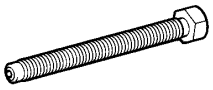	(09953–04020)	Center Bolt 150	TRANSFER ASSY(U341F)
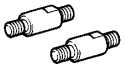	(09954–04010)	Arm 25	TRANSFER ASSY(U341F)
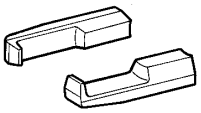	(09955–04061)	Claw No.6	TRANSFER ASSY(U341F)
	(09957–04010)	Attachment	TRANSFER ASSY(U341F)
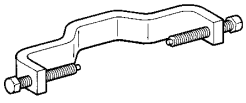	(09958–04011)	Holder	TRANSFER ASSY(U341F)

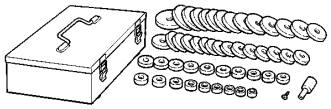	09950–60010	Replacer Set	TRANSFER ASSY(U341F) TRANSFER CASE RH OIL SEAL(U341F)
	(09951–00360)	Replacer 36	TRANSFER ASSY(U341F) TRANSFER CASE RH OIL SEAL(U341F)
	(09951–00380)	Replacer 38	TRANSFER ASSY(U341F)
	(09951–00400)	Replacer 40	TRANSFER ASSY(U341F)
	(09951–00420)	Replacer 42	TRANSFER ASSY(U341F)
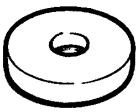	(09951–00450)	Replacer 45	TRANSFER ASSY(U341F)
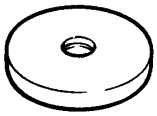	(09951–00580)	Replacer 58	TRANSFER ASSY(U341F)
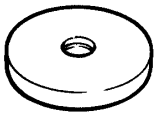	(09951–00590)	Replacer 59	TRANSFER ASSY(U341F) TRANSFER CASE RH OIL SEAL(U341F)
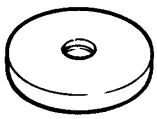	(09951–00610)	Replacer 61	TRANSFER ASSY(U341F)
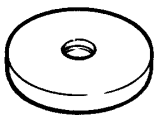	(09951–00620)	Replacer 62	TRANSFER ASSY(U341F)
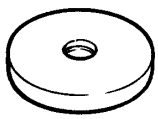	(09951–00640)	Replacer 64	TRANSFER ASSY(U341F)
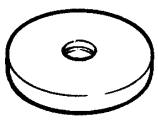	(09951–00650)	Replacer 65	TRANSFER ASSY(U341F)
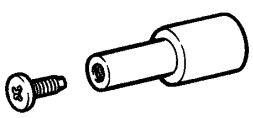	(09952–06010)	Adapter	TRANSFER ASSY(U341F) TRANSFER CASE RH OIL SEAL(U341F)

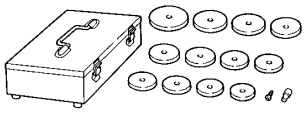	09950–60020	Replacer Set No.2	TRANSFER ASSY(U341F)
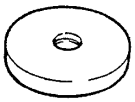	(09951–00680)	Replacer 68	TRANSFER ASSY(U341F)
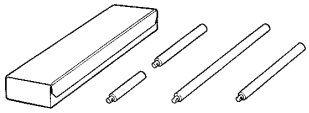	09950–70010	Handle Set	TRANSFER ASSY(U341F) TRANSFER CASE RH OIL SEAL(U341F)
	(09951–07150)	Handle 150	TRANSFER ASSY(U341F) TRANSFER CASE RH OIL SEAL(U341F)
	(09951–07200)	Handle 200	TRANSFER ASSY(U341F)

Recomended Tools

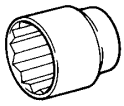	09011–12301	Socket Wrench 30 mm	TRANSFER CASE RH OIL SEAL(U341F)
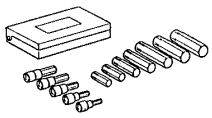	09040–00011	Hexagon Wrench Set	TRANSFER CASE OIL SEAL(U341F) TRANSFER ASSY(U341F)
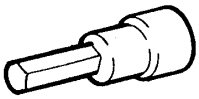	(09043–20050)	Socket Hexagon Wrench 5	TRANSFER CASE OIL SEAL(U341F) TRANSFER ASSY(U341F)
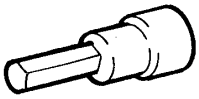	(09043–20060)	Socket Hexagon Wrench 6	TRANSFER EXTENSION HOUSING TYPE T OIL SEAL(U341F)
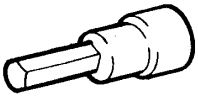	(09043–20100)	Socket Hexagon Wrench 10	TRANSFER CASE OIL SEAL(U341F) TRANSFER ASSY(U341F) TRANSFER CASE RH OIL SEAL(U341F)
	09090–04020	Engine Sling Device	TRANSFER CASE OIL SEAL(U341F) TRANSFER ASSY(U341F)

Equipment

Dial indicator with magnetic base	
CO/HC meter	
Radiator cap tester	
Thermometer	
Tire pressure gauge	
Alignment tester	
Toe–in gauge	
Torque wrench	
Plastic hammer	
Straight edge	
Slide calipers	
V–block	

Lubricant

Transfer oil	0.8 liters (0.84 US qts, 0.70 lmp. qts)	API GL–5 SAE 90

SSM (Special Service Materials)

	08826–00090	”Seal Packing 1281,” THREE BOND 1281 or equivalent (FIPG)

CLUTCH

021BR–01

PREPARATION

SST

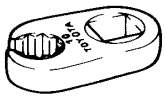	09023–00100	Union Nut Wrench 10 mm	CLUTCH RELEASE CYLINDER ASSY(MTM) CLUTCH MASTER CYLINDER ASSY(MTM)
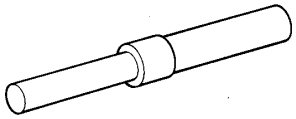	09301–00210	Clutch Guide Tool	CLUTCH UNIT(MTM)
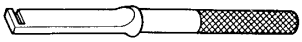	09333–00013	Universal Joint Bearing Remover & Replacer	CLUTCH UNIT(MTM)

Recomended Tools

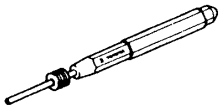	09031–00030	Pin Punch	CLUTCH MASTER CYLINDER ASSY
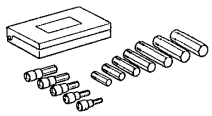	09040–00011	Hexagon Wrench Set	CLUTCH MASTER CYLINDER ASSY CLUTCH PEDAL SUB–ASSY
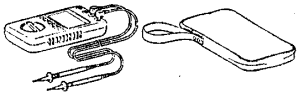	09082–00040	TOYOTA Electrical Tester	CLUTCH START SWITCH ASSY
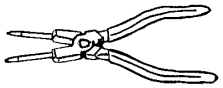	09905–00013	Snap Ring Pliers	CLUTCH MASTER CYLINDER ASSY

Equipment

Vernier calipers	
Dial indicator with magnetic base	
Torque wrench	

Lubricant

Item	Capacity	Classification
Brake fluid	–	SAE J1703 or FMVSS No. 116 DOT3

SUPPLEMENTAL RESTRAINT SYSTEM

030FN–03

TORQUE SPECIFICATION

Part Tightened	N·m	kgf·cm	ft·lbf
Horn button assy x Steering wheel assy	8.8	90	78 in.·lbf
Steering wheel assy x Steering column assy	50	510	37
Instrument panel passenger airbag assy x Instrument panel reinforcement	20	204	15
Airbag sensor assy center x Body	17.5	178	13
Airbag front RH sensor x Body	8.0	82	71 in.·lbf
Airbag sensor front LH x Body	8.0	82	71 in.·lbf
Side airbag sensor assy RH x Body	8.0	82	71 in.·lbf
Seat position airbag sensor x Front seat	8.0	82	71 in.·lbf

EXHAUST

030PE–01

SERVICE DATA

1ZZ–FE:

Compression spring Free length	Exhaust pipe assy front x Exhaust manifold	43mm (1.693 in.)
Compression spring Free length	4WD Exhaust pipe assy front x Exhaust tail pipe	40mm (1.575 in.)
Compression spring Free length	2WD Exhaust pipe assy front x Tail pipe assy	40mm (1.575 in.)

2ZZ–GE:

Compression spring Free length	Exhaust pipe assy front x Exhaust manifold	43mm (1.693 in.)
Compression spring Free length	Exhaust pipe assy front x Tail pipe assy	40mm (1.5748 in.)

030PF–01

TORQUE SPECIFICATION

1ZZ–FE:

Part Tightened		N·m	kgf·cm	ft·lbf
Exhaust pipe assy front x Exhaust manifold		43	440	32
Exhaust pipe assy front x Exhaust center pipe	4WD	43	440	32
Exhaust center pipe x Exhaust tail pupe	4WD	32	330	24
Exhaust pipe assy front x Tail pipe assy	2WD	43	440	32
Floor panel brace front x Body	2WD	30	302	22
Oxygen sensor No. 1 x Exhaust pipe assy front		44	450	33

2ZZ–GE:

Part Tightened	N·m	kgf·cm	ft·lbf
Exhaust pipe assy front x Exhaust manifold	43	440	32
Exhaust pipe assy front x Tail pipe assy	43	440	32
Floor panel brace front x Body	30	302	22
Oxygen sensor x Exhaust pipe assy front	44	450	33

COOLING

030PJ–02

SERVICE DATA

Thermostat		
Valve opening temperature		80 – 84°C (176 – 183°F)
Valve lift	at 90°C (194°F)	10 mm (0.39 in.) or more
Radiator cap sub–assy		
Standard opening pressure		74 – 103 kPa (0.75 – 1.05 kgf/cm2, 10.7 – 14.9 psi)
Minimum opening pressure		59 kPa (0.6 kgf/cm2, 8.5 psi)
Cooling fan		
Standard amperage	at 20°C (68°F)	8.0 – 12.0 A
Cooling fan		
Resistarce	at 20°C (68°F)	1.17 – 1.43 Ω

030PK–02

TORQUE SPECIFICATION

1ZZ–FE

Part Tightened		N·m	kgf·cm	ft·lbf
Radiator drain plug		13	130	9
Water pump x Cylinder block	Bolt A	9.0	92	8.0 in.lbf
	Bolt B	11	113	8
Generator assy	12 mm head	25	250	18
Generator assy	14 mm head	54	550	39

2ZZ–GE

Part Tightened		N·m	kgf·cm	ft·lbf
Radiator drain plug		13	130	9
Water pump x Cylinder block		9.0	92	8.0 in.lbf
Water pump x Water pump pulley		15	153	11
Generator assy	12 mm head	25	250	18
Generator assy	14 mm head	54	550	39

IGNITION

030PA–01

SERVICE DATA

1ZZ–FE:

Spark plug		
Recommended spark plug	DENSO made	SK16R11
	NGK made	IFR5A11
Electrode gap	Standard	1.1mm (0.043 in.)
Crank position sensor No. 1		
Resistance	at cold	835–1,400Ω
	at hot	1,060–1,645Ω
Crank position sensor		
Resistance	at cold	1,630–2,740Ω
	at hot	2,065–3,225Ω
Ignition relay		
Specified condition	Between terminals 1 and 2	Continuity
	Between terminals 3 and 5	No continuity

2ZZ–GE:

Spark plug		
Recommended spark plug	DENSO made	SK20R11
	NGK made	IFR6A11
Electrode gap		1.1mm (0.043 in.)
Cam position sensor		
Resistance	at cold	835–1,400Ω
	at hot	1,060–1,645Ω
Crank position sensor		
Resistance	at cold	1,630–2,740Ω
	at hot	2,065–3,225Ω
Ignition relay		
Specified condition	Between terminals 1 and 2	Continuity
	Between terminals 3 and 5	No continuity

030PB–01

TORQUE SPECIFICATION

1ZZ–FE:

Part Tightened	N·m	kgf·cm	ft·lbf
Spark plug x Cylinder head cover	25	255	18
Ignition coil x Cylinder head cover	9.0	92	80 in.·lbf

2ZZ–GE:

Part Tightened	N·m	kgf·cm	ft·lbf
Spark plug x Cylinder head	18	178	13
Ignition coil x Cylinder head cover	9.0	92	80 in.·lbf

DRIVE SHAFT / PROPELLER SHAFT / AXLE

030PW–02

SERVICE DATA

Propeller shaft sub–assy runout	Max.	0.4 mm (0.016 in.)
Intermediate shaft sub–assy runout	Max.	0.4 mm (0.016 in.)
Intermediate shaft sub–assy flange runout (horizontal direction)	Max.	0.1 mm (0.004 in.)
Intermediate shaft sub–assy flange runout (vertical direction)	Max.	0.1 mm (0.004 in.)
Front axle hub bearing	Backlash	Maximum: 0.05 mm (0.0020 in.)
Front axle hub sub–assy	Deviation	Maximum: 0.05 mm (0.0020 in.)
Rear axle hub & bearing assy	Backlash Deviation	Maximum: 0.05 mm (0.0020 in.) Maximum: 0.07 mm (0.0028 in.)

030PX–02

TORQUE SPECIFICATION

Part Tightened	N·m	kgf·cm	ft·lbf
Intermediate shaft sub–assy x Center support bearing assy No.1			
1st	181.4	1,850	134
Loosen nut			
2nd	68.6	700	51
Propeller w/center bearing shaft assy x Differential carrier assy rear	73.5	749	54
Propeller shaft sub–assy x Intermediate shaft sub–assy	27	275	20
Center support bearing assy No.1 x Body	36.8	374	27
Front wheel set nut	103	1,050	76
Rear wheel set nut	103	1,050	76
Manual transaxle oil drain plug	39.2	400	29
Automatic transaxle fluid drain plug 1ZZ–FE (2WD):	17.5	178	13
1ZZ–FE (4WD)/ 2ZZ–GE:	49	500	36
Transfer oil drain plug	49	500	36
Bearing lock bolt 1ZZ–FE (4WD):	32.4	330	24
2ZZ–FE:	64	650	47
Lower ball joint assy front x Suspension arm sub–assy lower No.1	89	908	66
Tie rod end sub–assy x Steering knuckle	49	500	36
Flexible hose and speed sensor front x Shock absorber assy front	29	296	21
Speed sensor front x Steering knuckle	8.0	82	71 in.·lbf
Front stabilizer link assy x Shock absorber assy front	74	755	55
Front axle hub nut	216	2,200	159
Disc brake dust cover front x Steering knuckle	8.3	85	73 in.·lbf
Lower ball joint assy front x Steering knuckle	103	1,050	76
Front axle assy x Shock absorber assy front	220	2,243	162
Front disc brake caliper assy x Steering knuckle	106.8	1,089	79
Rear axle hub & bearing assy x Rear axle beam	61	622	45
Rear disc brake caliper assy x Backing plate	47	479	35
Rear axle hub & bearing assy x Rear axle carrier sub–assy	56	571	41
Rear brake tube No.4 x Flexible hose	15	153	11
Speed sensor rear x Rear axle carrier sub–assy	8.0	82	71 in.·lbf
Rear axle shaft nut	216	2,203	159
Rear stabilizer link assy x Rear suspension arm assy No.1	44	450	32

ENGINE HOOD/DOOR

TORQUE SPECIFICATION

030R9–01

Part Tightened	N·m	kgf·cm	ft·lbf
HOOD			
Hood x Hood hinge	13	133	10
FRONT DOOR			
Front door check assembly (door panel side bolt) x Door panel	5.5	56	49 in.·lbf
Front door outside handle frame sub–assy x Door panel	4.0	41	35 in.·lbf
Front door lock assy x Door panel	5.0	51	44 in.·lbf
Front door outside handle cover installation bolt (torx)	4.0	41	35 in.·lbf
Front door frame sub–assy rear lower x Door panel	6.2	63	55 in.·lbf
Power window regulator motor assy x Front door window regulator	5.4	55	48 in.·lbf
Front door window regulator sub–assy x Door panel	8.0	82	71 in.·lbf
Front door glass sub–assy x Front door window regulator sub–assy	8.0	82	71 in.·lbf
Outer rear view mirror assy x Door panel	8.0	82	71 in.·lbf
Front door hinge x Body	26	265	19
Front door hinge x Door panel	26	265	19
Front door lock striker x Body	23	235	17
REAR DOOR			
Rear door check assembly (door panel side bolt) x Door panel	5.5	56	49 in.·lbf
Rear door outside handle frame sub–assy x Door panel	4.0	41	35 in.·lbf
Rear door outside handle cover installation bolt (torx)	4.0	41	35 in.·lbf
Rear door lock assy x Door panel	5.0	51	44 in.·lbf
Power window regulator motor assy x Rear door window regulator	5.4	55	48 in.·lbf
Rear door window regulator sub–assy x Door panel	8.0	82	71 in.·lbf
Rear door window division bar x Door panel Bolt A	6.2	63	55 in.·lbf
Rear door hinge x Body	26	265	19
Rear door hinge x Door panel	26	265	19
Rear door lock striker x Body	23	235	17
BACK DOOR			
Back door lock assy x Door panel	7.0	71	62 in.·lbf
Back door outside handle x Door panel	4.0	41	35 in.·lbf
Back door outside garnish sub–assy x Door panel	4.0	41	35 in.·lbf
Back door hinge x Body	19.5	199	14
Back door hinge x Door panel	19.5	199	14
Back door lock striker x Body	11.5	117	8.5

STANDARD BOLT

HOW TO DETERMINE BOLT STRENGTH

030LD–03

Bolt Type				Class
Hexagon Head Bolt		Stud Bolt	Weld Bolt	
Normal Recess Bolt	Deep Recess Bolt			
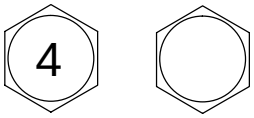		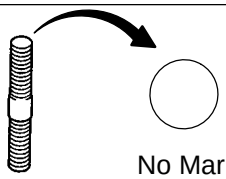	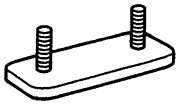	4T
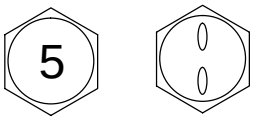	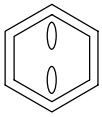			5T
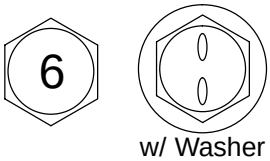				6T
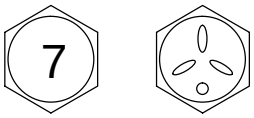	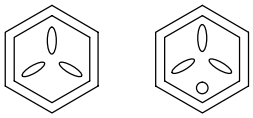			7T
				8T
				9T
	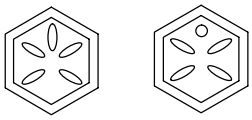			10T
	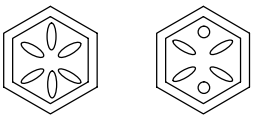			11T

B06431

030LF–03

HOW TO DETERMINE NUT STRENGTH

Nut Type			Class
Present Standard Hexagon Nut	Old Standard Hexagon Nut		
	Cold Forged Nut	Cutting Processed Nut	
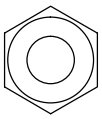 No Mark			4N
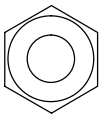 No Mark (w/Washer)	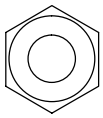 No Mark (w/Washer)	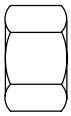 No Mark	5N (4T)
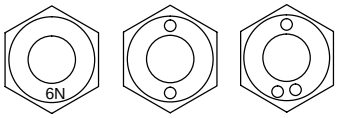 6N			6N
	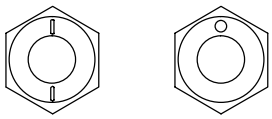	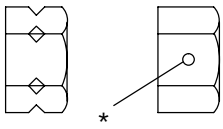 *	7N (5T)
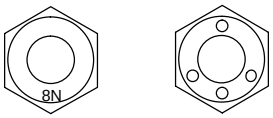 8N			8N
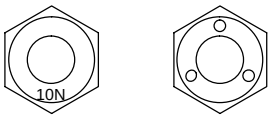 10N	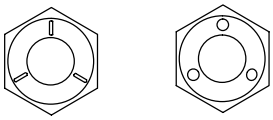	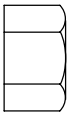 No Mark	10N (7T)
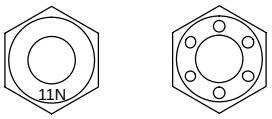 11N			11N
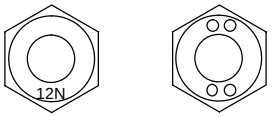 12N			12N

*: Nut with 1 or more marks on one side surface of the nut.

B06432

HINT:

Use the nut with the same number of the nut strength classification or greater than the bolt strength classification number when tightening parts with a bolt and nut.

Example: Bolt = 4T

Nut = 4N or more

030LE–03

SPECIFIED TORQUE FOR STANDARD BOLTS

Class	Diameter mm	Pitch mm	Specified torque					
			Hexagon head bolt			Hexagon flange bolt		
			N·m	kgf·cm	ft·lbf	N·m	kgf·cm	ft·lbf
4T	6	1	5	55	48 in.·lbf	6	60	52 in.·lbf
	8	1.25	12.5	130	9	14	145	10
	10	1.25	26	260	19	29	290	21
	12	1.25	47	480	35	53	540	39
	14	1.5	74	760	55	84	850	61
	16	1.5	115	1,150	83	–	–	–
5T	6	1	6.5	65	56 in.·lbf	7.5	75	65 in.·lbf
	8	1.25	15.5	160	12	17.5	175	13
	10	1.25	32	330	24	36	360	26
	12	1.25	59	600	43	65	670	48
	14	1.5	91	930	67	100	1,050	76
	16	1.5	140	1,400	101	–	–	–
6T	6	1	8	80	69 in.·lbf	9	90	78 in.·lbf
	8	1.25	19	195	14	21	210	15
	10	1.25	39	400	29	44	440	32
	12	1.25	71	730	53	80	810	59
	14	1.5	110	1,100	80	125	1,250	90
	16	1.5	170	1,750	127	–	–	–
7T	6	1	10.5	110	8	12	120	9
	8	1.25	25	260	19	28	290	21
	10	1.25	52	530	38	58	590	43
	12	1.25	95	970	70	105	1,050	76
	14	1.5	145	1,500	108	165	1,700	123
	16	1.5	230	2,300	166	–	–	–
8T	8	1.25	29	300	22	33	330	24
	10	1.25	61	620	45	68	690	50
	12	1.25	110	1,100	80	120	1,250	90
9T	8	1.25	34	340	25	37	380	27
	10	1.25	70	710	51	78	790	57
	12	1.25	125	1,300	94	140	1,450	105
10T	8	1.25	38	390	28	42	430	31
	10	1.25	78	800	58	88	890	64
	12	1.25	140	1,450	105	155	1,600	116
11T	8	1.25	42	430	31	47	480	35
	10	1.25	87	890	64	97	990	72
	12	1.25	155	1,600	116	175	1,800	130

HEATER & AIR CONDITIONER

030RM–01

SERVICE DATA

Refrigerant charge volume	Standard:	490 ± 30 g (17.28 ± 1.06 oz.)
Magnetic clutch clearance	2ZZ–GE	0.35 – 0.60 mm (0.013 – 0.023 in.)
Magnetic clutch clearance	1ZZ–FE	0.35 – 0.60 mm (0.013 – 0.023 in.)

030RN–01

TORQUE SPECIFICATION

Part Tightened	N·m	kgf·cm	ft·lbf
AIR CONDITIONING UNIT ASSY			
Air conditioning tube assy x Cooler evaporator sub–assy No. 1	3.5	35	30 in.·lbf
Air conditioning unit assy x Body	9.8	100	87 in.·lbf
ECM x Blower assy	3.0	30	26 in.·lbf
COOLER COMPRESSOR ASSY (2ZZ–GE)			
Magnet clutch hub x Cooler compressor assy	18	183	13
Compressor and magnetic clutch x Engine	29	295	21
Discharge hose sub–assy x Compressor and magnetic clutch	9.8	100	87 in.·lbf
Cooler refrigerant suction hose No.1 x Compressor and magnetic clutch	9.8	100	87 in.·lbf
COOLER COMPRESSOR ASSY (1ZZ–FE)			
Magnet clutch hub x Cooler compressor assy	18	183	13
Compressor and magnetic clutch x Engine	29	295	21
Discharge hose sub–assy x Compressor and magnetic clutch	9.8	100	87 in.·lbf
Cooler refrigerant suction hose No.1 x Compressor and magnetic clutch	9.8	100	87 in.·lbf
W/RECEIVER CONDENSER ASSY			
Cap x W/receiver condenser assy	2.9	29	25 in.·lbf
W/receiver condenser assy x Body	9.8	100	87 in.·lbf
Cooler refrigerant discharge hose No. 1 x W/receiver condenser assy	5.4	55	48 in.·lbf
Cooler refrigerant liquid pipe A x W/receiver condenser assy	5.4	55	48 in.·lbf

AUDIO & VISUAL SYSTEM

030RO–01

TORQUE SPECIFICATION

Part Tightened	N·m	kgf·cm	ft·lbf
Front No.2 speaker assy x Front door panel	8.0	82	71 in.·lbf
Amplifier antenna assy x Antenna nut	4.5	46	40 in.·lbf
Voltage inverter assy x Body	7.0	71	62 in.·lbf

BRAKE

SERVICE DATA

030QV–01

Brake pedal height (from asphalt sheet)	M/T A/T	134.9 – 144.9 mm (5.311 – 5.703 in.) 136.0 – 146.0 mm (5.353 – 5.747 in.)
Brake Pedal free play		1 – 6 mm (0.04 – 0.24 in.)
Stop light switch clearance		0.5 – 2.4 mm (0.020 – 0.094 in.)
Pedal reserve distance from asphalt sheet at 490 N (50 kgf, 110.2 lbf)		More than 70 mm (2.76 in.)
Brake booster push rod to piston clearance (w/ SST)		0 mm (0 in.)
Front brake pad thickness	Standard Minimum	11.0 mm (0.433 in.) 1.0 mm (0.039 in.)
Front brake disc thickness	Standard Minimum	25.0 mm (0.984 in.) 23.0 mm (0.906 in.)
Front brake disc runout	Maximum	0.05 mm (0.0020 in.)
Rear brake drum inside diameter	Standard Maximum	228.6 mm (9.000 in.) 229.6 mm (9.039 in.)
Rear drum brake shoe lining thickness	Standard Minimum	5.5 mm (0.217 in.) 1.0 mm (0.039 in.)
Rear brake pad thickness	Standard Minimum	10.0 mm (0.394 in.) 1.0 mm (0.039 in.)
Rear disc brake thickness	Standard Minimum	9.0 mm (0.354 in.) 7.5 mm (0.295 in.)
Rear brake disc runout	Maximum	0.15 mm (0.0059 in.)

030QW–01

TORQUE SPECIFICATION

Part Tightened	N·m	kgf·cm	ft·lbf
Bleeder plug	8.3	85	74 in.·lbf
Brake booster clevis lock nut	26	265	19
Brake pedal support sub–assy x Brake pedal sub–assy	36.8	375	27
Brake booster x Body	12.7	130	9
Brake pedal support sub–assy x Body	23.6	240	17
Brake master cylinder x Piston stopper bolt	10	102	7
Brake master cylinder x Reservoir	1.8	18.4	15.9 in.·lbf
Brake master cylinder x Brake booster	12.5	127	9
Brake line union nut	15.2	155	11
Wheel nut	103	1,050	76
Cruise control actuator bracket x Body	43	438	32
Front brake cylinder mounting x Steering knuckle	106.8	1,089	79
Front brake cylinder x Front brake cylinder mounting	34.3	350	25
Front disc brake caliper x Flexible hose	29	296	21
Rear drum brake wheel cylinder x Backing plate	10	102	7
Rear disc brake caliper installation bolt	46.6	475	34
Rear disc brake caliper x Flexible hose	29	296	21
Proportioning valve assy x Body	5.4	55	48 in.·lbf
Brake actuator assy x Actuator bracket	4.7	48	42 in.·lbf
Brake actuator bracket x Body	19	194	14
Front speed sensor x Steering knuckle	8.0	82	71 in.·lbf
Front speed sensor wire harness clamp x Shock absorber	29	296	21
Front speed sensor wire harness clamp x Body	8.0	82	71 in.·lbf
Rear speed sensor x Knuckle	8.0	82	71 in.·lbf
Yawrate sensor bracket set bolt	21	214	15
Yawrate sensor x Body	21	214	15

PARKING BRAKE

030QT–01

SERVICE DATA

Parking brake lever travel at 196 N (20 kgf, 44.1 lbf):		5 – 8 clicks
Rear brake disc inside diameter	Standard	173 mm (6.81 in.)
	Maximum	174 mm (6.85 in.)
Parking brake shoe lining thickness	Standard	3.5 mm (0.138 in.)
	Maximum	1.0 mm (0.039 in.)

030QU–01

TORQUE SPECIFICATION

Part Tightened	N·m	kgf·cm	ft·lbf
Wheel nut	103	1,050	76
Parking brake lock nut	5.0	55	44 in.·lbf
Parking brake lever sub–assy x Body	12.5	130	9
Front floor heat insulator No.2 x Body	5.5	55	48 in.·lbf
Front floor heat insulator No.1 x Body	5.5	55	48 in.·lbf
Exhaust pipe installation bolt	43	440	32
Front floor panel brace x Body	29.6	302	21
Parking brake cable assy No.3 x Body	5.4	55	48 in.·lbf
Fuel tank protector No.1 x Body	5.5	55	48 in.·lbf
Parking brake cable assy No.3 x Backing plate	7.8	80	69 in.·lbf

EXTERIOR/INTERIOR TRIM

030QP–01

TORQUE SPECIFICATION

Part Tightened	N·m	kgf·cm	ft·lbf
Front bumper reinfocement × Body	36	367	27
Front bumper cover x Body	5.0	51	44 in.·lbf
Rear bumper arm LH × Body	36	367	27
Rear bumper arm RH × Body	36	367	27
Rear bumper reinfocement No.1 × Rear bumper arm LH	36	367	27
Rear bumper reinfocement No.1 × Rear bumper arm RH	36	367	27
Bumper mounting set bolt No. 1 × Body	5.5	56	49 in.·lbf
3 point belt assy outer RH x Body	41.2	420	30
3 point belt assy outer LH x Body	41.2	420	30
Front seat outer belt RH x Body	41.2	420	30
Front seat outer belt LH x Body	41.2	420	30
Bracket x Body	18	185	13

CRUISE CONTROL

030PP–01

SERVICE DATA

Accelerator auto drive cable clearance (1ZZ–FE)	Standard	2 – 6 mm (0.079 – 0.236 in.)
Accelerator auto drive cable clearance (2ZZ–GE)	Standard	2 – 6 mm (0.079 – 0.236 in.)

030PQ–01

TORQUE SPECIFICATION

Part Tightened	N·m	kgf·cm	ft·lbf
Cruise control actuator assy x Cruise control bracket	6.0	60	52 in.·lbf

FUEL

SERVICE DATA

030OW–01

Fuel pressure	at idle	304 – 343 kPa (3.1 – 3.5 kgf/cm2, 44 – 50 psi)
Fuel injector assy		
Resistance	at 20°C (68°F)	13.4 – 14.2Ω
Injection volume	1ZZ–FE	60 – 73 cm^3 (3.7 – 4.5 cu in.) per 15 seconds
	2ZZ–GE	77 – 94 cm^3 (4.7 – 5.7 cu in.) per 15 seconds
Difference between each injector	1ZZ–FE	13 cm^3 (0.8 cu in.) or less
	2ZZ–GE	17 cm^3 (1.0 cu in.) or less
Fuel drop		1 drop or less per 12 minutes
Fuel pump		
Resistance	at 20°C (68°F)	0.2 – 3.0 Ω
Compression spring		
Free length (FF)	Front side	43 mm (1.6929 in.)
	Rear side	40 mm (1.5748 in.)
Free length (4WD)		40 mm (1.5748 in.)

030OX–01

TORQUE SPECIFICATION

Part Tightened		N·m	kgf·cm	ft·lbf
Fuel delivery pipe sub–assy x Cylinder head sub–assy (1ZZ–FE)	Bolt A	19	194	14
	Bolt B	9.0	92	80 in.·lbf
Cylinder head cover No. 2 x Cylinder head cover sub–assy (1ZZ–FE)		7.0	71	62 in.·lbf
Fuel delivery pipe sub–assy x Cylinder head sub–assy (2ZZ–GE)	Bolt A	29	296	21
	Bolt B	9.0	92	80 in.·lbf
Clamp x Cylinder head cover sub–assy (2ZZ–GE)		9.0	92	80 in.·lbf
Engine wire x Cylinder head cover sub–assy (2ZZ–GE)		10	102	7
Fuel tank vent tube set plate x Fuel tank assy		6.0	61	53 in.·lbf
Separate type rear seat cushion assy x Body		41	420	30
Fuel tank protector No. 2 x Fuel tank assy (4WD)		6.0	61	53 in.·lbf
Fuel tube clamp No. 4 x Fuel tank assy		6.0	61	53 in.·lbf
Fuel tank band sub–assy No. 1 x Body		39	400	29
Fuel tank band sub–assy No. 1 LH x Body		39	400	29
Parking brake cable assy No. 2 x Body		5.4	55	48 in.·lbf
Parking brake cable assy No. 3 x Body		5.4	55	48 in.·lbf
Fuel tank protector No. 1 x Body		5.4	55	48 in.·lbf
Fuel tank protector No. 1 x Fuel tank band sub–assy No. 1		5.4	55	48 in.·lbf
Exhaust pipe assy front x Exhaust manifold (FF)		43	440	32
Exhaust pipe assy front x Tail pipe assy (FF)		43	440	32
Floor panel brace front x Body (FF)		30	302	22
Fuel tank inlet valve assy x Fuel tank assy (4WD)		3.5	36	31 in.·lbf
Fuel tube clamp No. 4 x Fuel tank assy (4WD)		6.0	61	53 in.·lbf
Check valve protector x Fuel tank assy (4WD)		3.5	36	53 in.·lbf
Evaporation vent tube clamp No. 2 x Fuel tank assy (4WD)		6.0	61	53 in.·lbf
Charcoal canister assy x Body (4WD)		19	194	14
Front floor heat insulator No. 2 x Body (4WD)		5.5	56	49 in.·lbf
Front floor heat insulator No. 1 x Body (4WD)		5.5	56	49 in.·lbf
Exhaust pipe assy center x Exhaust pipe assy front (4WD)		43	440	32
Exhaust pipe assy center x Tail pipe assy (4WD)		32	330	24

ENGINE MECHANICAL

030QG–01

SERVICE DATA

1ZZ–FE

Ignition timing	w/ Terminal TC and CG of DLC3 connected	8 – 12°BTDC
	W/ Terminal TC and CG of DLC3 disconnected	10 – 18°BTDC
Idle speed		650 – 750 rpm
Compression		
Compression pressure		1,300 kPa (13.3 kgf·cm^2, 189 psi)
Minimum pressure		1,000 kPa (10.2 kgf·cm^2, 145 psi)
Difference between each cylinder		100 kPa (1.0 kgf·cm^2, 15 psi)
Cylinder head set bolt Length	Standard	146.8 – 148.2 mm (5.780 – 5.835 in.)
	Maximum	148.5 mm (5.846 in.)
Valve clearance (Cold)		
No. 1 Cylinder TDC/Compression	Intake	0.15 – 0.25 mm (0.0059 – 0.0098 in.)
	Exhaust	0.25 – 0.35 mm (0.0098 – 0.0138 in.)
No. 4 Cylinder TDC/Compression	Intake	0.15 – 0.25 mm (0.0059 – 0.0098 in.)
	Exhaust	0.25 – 0.35 mm (0.0098 – 0.0138 in.)
Chain elongation	Maximum	122.6 mm (4.827 in.)
Camshaft timing gear diameter (w/ chain)	Minimum	97.3 mm (3.831 in.)
Crankshaft timing gear Diameter (w/ chain)	Minimum	51.6 mm (2.032 in.)
Chain tensioner slipper wear	Maximum	1.0 mm (0.039 in.)
Chain vibration damper wear	Maximum	1.0 mm (0.039 in.)
Camshaft		
Circle runout	Maximum	0.03 mm (0.0012 in.)
Cam lob height	Standard Intake	44.333 – 44.433 mm (1.7454 – 1.7493 in.)
	Exhaust	43.761 – 43.861 mm (1.7229 – 1.7268 in.)
	Minimum Intake	44.18 mm (1.7394 in.)
	Exhaust	43.61 mm (1.7169 in.)
Journal diameter	No. 1	34.449 – 34.465 mm (1.3563 – 1.3569 in.)
	Others	22.949 – 22.965 mm (0.9035 – 0.9041 in.)
Cylinder head warpage	Cylinder block side	0.05 mm (0.0020 in.)
	Intake manifold side	0.10 mm (0.0039 in.)
	Exhaust manifold side	0.10 mm (0.0039 in.)
Camshaft thrust clearance	Standard	0.040 – 0.095 mm (0.0016 – 0.0037 in.)
	Maximum	0.110 mm (0.0043 in.)
Camshaft oil clearance	Standard	0.035 – 0.072 mm (0.0014 – 0.0028 in.)
	Maximum	0.10 mm (0.0039 in.)
Valve lifter diameter		30.966 – 30.976 mm (1.2191 – 1.2195 in.)
Valve lifter bore diameter		31.000 – 31.025 mm (1.2205 – 1.2215 in.)
Valve lifter oil clearance	Standard	0.024 – 0.059 mm (0.0009 – 0.0023 in.)
	Maximum	0.079 mm (0.0031 in.)
Inner compression spring		
Free length		43.40 mm (1.7087 in.)
Deviation		1.6 mm (0.063 in.)
Angle (reference)		2°
Installed tension	at 33.6 mm (1.323 in.)	158.6 – 175.4 N (16.2 – 17.9 kgf, 35.7 – 39.5 lbf)
Maximum working tension	at 24.1 mm (0.949 in.)	335.3 – 370.7 N (34.2 – 37.8 kgf, 75.4 – 83.3 lbf)
Valve		
Overall length	Standard Intake	88.65 mm (3.4902 in.)
	Exhaust	88.69 mm (3.4917 in.)
	Minimum Intake	88.35 mm (3.4784 in.)
	Exhaust	88.39 mm (3.4799 in.)
Valve stem diameter	Intake	5.470 – 5.485 mm (0.2154 – 0.2159 in.)
	Exhaust	5.465 – 5.480 mm (0.2152 – 0.2158 in.)
Margin thickness	Standard	1.0 mm (0.039 in.)
	Minimum	0.7 mm (0.028 in.)
Valve guide bushing inside diameter		5.510 – 5.530 mm (0.2169 – 0.2177 in.)

Valve guide Bushing oil clearance	Standard Intake	0.025 –0.060 mm (0.0010 – 0.0024 in.)
	Exhaust	0.030 – 0.065 mm (0.0012 – 0.0026 in.)
	Maximum Intake	0.08 mm (0.0032 in.)
	Exhaust	0.10 mm (0.0039 in.)
Valve guide bushing bore diameter	STD	10.285 – 10.306 mm (0.4049 – 0.4058 in.)
	O/S 0.05	10.335 – 10.356 mm (0.4069 – 0.4077 in.)
Valve guide bushing protrusion height		8.7 – 9.1 mm (0.343 – 0.358 in.)
Straight pin protrusion height (cylinder head)		5 mm (0.197 in.)
Union protrusion height	A	29 mm (1.142 in.)
	B	66.5 mm (2.618 in.)
	C	24 mm (0.945 in.)
Connecting rod thrust clearance	Standard	0.160 – 0.342 mm (0.063 – 0.135 in.)
	Maximum	0.342 mm (0.135 in.)
Connecting rod oil clearance	Standard	0.028 – 0.060 mm (0.0011 – 0.0024 in.)
	Maximum	0.080 mm (0.0032 in.)
Connecting rod large end bore diameter	1	47.000 – 47.008 mm (1.85039 –1.85071 in.)
	2	47.009 – 47.016 mm (1.85075 – 1.85102 in.)
	3	47.017 – 47.024 mm (1.85106 – 1.85134 in.)
Connecting rod bearing thickness	1	1.486 – 1.490 mm (0.05850 – 0.05866 in.)
	2	1.491 – 1.494 mm (0.05870 – 0.05882 in.)
	3	1.495 – 1.498 mm (0.05886 – 0.05898 in.)
Crankshaft pin outer diameter		43.992 – 44.000 mm (1.73197 – 1.73228 in.)
Crankshaft thrust clearance	Standard	0.04 – 0.24 mm (0.0016 – 0.0095 in.)
	Maximum	0.30 mm (0.0118 in.)
Cylinder block warpage	Maximum	0.05 mm(0.0020 in.)
Cylinder bore diameter		79.000 – 79.013 mm (3.1102 – 3.1108 in.)
Piston diameter at 25.6 mm (1.008 in.) from piston head		78.872 – 78.972 mm (3.1052 –3.1091 in.)
Piston oil clearance	Standard	0.065 – 0.088 mm (0.0026 –0.0035 in.)
	Maximum	0.088 mm (0.0035 in.)
Piston pin bore diameter	A	20.006 – 20.009 mm (0.78764 – 0.78776 in.)
	B	20.010 – 20.012 mm (0.78780 – 0.78787 in.)
	C	20.013 – 20.015 mm (0.78791 – 0.78799 in.)
Piston pin outer diameter	A	20.004 – 20.007 mm (0.78756 – 0.78768 in.)
	B	20.008 – 20.010 mm (0.78772 – 0.78780 in.)
	C	20.011 – 20.013 mm (0.78783 – 0.78791 in.)
Connecting rod small end bore diameter	A	20.012 – 20.015 mm (0.78787 – 0.78799 in.)
	B	20.016 – 20.018 mm (0.78803 – 0.78811 in.)
	C	20.019 – 20.021 mm (0.78815 – 0.78823 in.)
Piston pin oil clearance		
Piston pin x Piston	Standard	0.002 – 0.011 mm (0.0001 – 0.0004 in.)
	Maximum	0.011 mm (0.0004 in.)
Piston pin x Connecting rod	Standard	–0.001 – 0.017 mm (–0.00004 – 0.0007 in.)
	Maximum	0.017 mm (0.0007 in.)
Ring groove clearance	No. 1	0.020 – 0.070 mm (0.0008 – 0.0028 in.)
	No. 2	0.030 – 0.070 mm (0.0012 – 0.0028 in.)
	Oil	0.03 – 0.11 mm (0.0012 – 0.0043 in.)
Piston ring end gap	Standard No. 1	0.25 – 0.35 mm (0.0098 – 0.0138 in.)
	No. 2	0.35 – 0.50 mm (0.0138 – 0.0197 in.)
	Oil	0.15 – 0.40 (0.0059 – 0.158 in.)
	Maximum No. 1	1.05 mm (0.0413 in.)
	No. 2	1.20 mm (0.0472 in.)
Connecting rod		
Out–of alignment	Maximum	0.05 mm (0.0020 in.) per 100 mm (3.94 in.)
Twist	Maximum	0.05 mm (0.0020 in.) per 100 mm (3.94 in.)
Connecting rod bolt diameter	Standard	6.6 – 6.7 mm (0.260 – 0.264 in.)
	Maximum	6.4 mm (0.252 in.)

Crankshaft		
Circle runout	Maximum	0.03 mm (0.0012 in.)
Main journal diameter		47.988 – 48.000 mm (1.8893 – 1.8898 in.)
Taper and out–of–round	Maximum	0.020 mm (0.0008 in.)
Crank pin diameter		43.992 – 44.000 mm (1.7320 – 1.7323 in.)
Taper and out–of–round	Maximum	0.020 mm (0.0008 in.)
Crankshaft bearing cap set bolt diameter	Standard	7.3 – 7.5 mm (0.287 – 0.295 in.)
	Minimum	7.3 mm (0.287 in.)
Crankshaft oil clearance	Standard	0.015 – 0.032 mm (0.0006 – 0.0013 in.)
	Minimum	0.05 mm (0.0020 in.)
Cylinder block journal bore diameter	0	52.000 – 52.002 mm (2.04724 – 2.04732 in.)
	1	52.003 – 52.004 mm (2.04736 – 2.04740 in.)
	2	52.005 – 52.006 mm (2.04744 – 2.04748 in.)
	3	52.007 – 52.009 mm (2.04752 – 2.04760 in.)
	4	52.010 – 52.011 mm (2.04764 – 2.04768 in.)
	5	52.012 – 52.013 mm (2.04772 – 2.04776 in.)
	6	52.014 – 52.015 mm (2.04788 – 2.04783 in.)
Crankshaft journal diameter	0	47.999 – 48.000 mm (1.88972 – 1.88976 in.)
	1	47.997 – 47.998 mm (1.88965 – 1.88969 in.)
	2	47.995 – 47.996 mm (1.88957 – 1.88961 in.)
	3	47.993 – 47.994 mm (1.88949 – 1.88953 in.)
	4	47.991 – 47.992 mm (1.88941 – 1.88945 in.)
	5	47.988 – 47.990 mm (1.88929 – 1.88922 in.)
Standard bearing center wall thickness	1	1.994 – 1.997 mm (0.07850 – 0.07862 in.)
	2	1.998 – 2.000 mm (0.07866 – 0.07874 in.)
	3	2.001 – 2.003 mm (0.07878 – 0.07886 in.)
	4	2.004 – 2.006 mm (0.07890 – 0.07898 in.)
Straight pin (Cylinder block)	A	5 mm (0.200 in.)
	B	7.5 mm (0.295 in.)
	C	12 mm (0.472 in.)
	D	8 mm (0.315 in.)
Ring pin (Cylinder block)	A	6 mm (0.236 in.)
	B	7 mm (0.276 in.)
	C	10 mm (0.394 in.)

2ZZ–GE

Ignition timing	w/ Terminal TC and CG of DLC3 connected	8 – 12°BTDC
	W/ Terminal TC and CG of DLC3 disconnected	4 – 12°BTDC (M/T)
		10 – 18°BTDC (A/T)
Idle speed		750 – 850 rpm (M/T)
		700 – 800 rpm (A/T)
Compression		
Compression pressure		1,400 kPa (14.3kgf/cm^2 203 psi)
Minimum pressure		1,000 kPa (10.3 kgf/cm^2 145 psi)
Difference between each cylinder		110 kPa (1.1kgf/cm^2 16 psi)
Cylinder head set bolt		
Length	Standard	146.0 – 148.2 mm (5.780 – 5.835 in.)
	Maximum	148.5 mm (5.846 in.)
Valve clearance (cold)	Intake	0.08 – 0.18 mm (0.0031 – 0.0071 in.)
	Exhaust	0.22 – 0.32 mm (0.0087 – 0.0126 in.)
Chain length at 16 links	Maximum	122.6 mm (4.827 in.)
Camshaft timing sprocket diameter (w / chain)	Minimum	97.3mm (3.831 in.)
Crankshaft timing sprocket diameter (w / chain)	Minimum	51.6mm (2.031in.)
Chain tensioner slipper wear	Maximum	1.0 mm (0.039 in.)
Chain tensioner vibration damper wear	Maximum	1.0 mm (0.039 in.)
Camshaft circle runout	Maximum	0.03 mm (0.0012 in.)

Camshaft lobe height	Standard	
	Intake No. 1	40.607 – 40.707 mm (1.5987 – 1.6026 in.)
	Intake No. 2	38.769 – 38.869 mm (1.5236 – 1.5303 in.)
	Exhaust No. 1	40.019 – 40.119 mm (1.5756 – 1.5795 in.)
	Exhaust No. 2	38.863 – 38.963 mm (1.5300 – 1.5340 in.)
	Minimum	
	Intake No. 1	40.45 mm (1.5925 in.)
	Intake No. 2	38.61 mm (1.5201 in.)
	Exhaust No. 1	39.86 mm (1.5693 in.)
	Exhaust No. 2	38.71 mm (1.5240 in.)
Camshaft journal diameter	No. 1	34.449 – 34.465 mm (1.3563 – 1.3569 in.)
	Others	27.949 – 27.965 mm (1.1004 – 1.1010 in.)
Cylinder head warpage	Maximum	
	Cylinder block side	0.2 mm (0.0080 in.)
	Intake manifold side	0.2 mm (0.0080 in.)
	Exhaust manifold side	0.3 mm (0.0120 in.)
Busing oil clearance inside diameter		5.500 – 5.518 mm (0.2165 – 0.2172 in.)
Valve stem diameter	Intake	5.460 – 5.475 mm (0.2145 – 0.2156 in.)
	Exhaust	5.445 – 5.470 mm (0.2144 – 0.2154 in.)
Valve stem oil clearance	Standard	
	Intake	0.025 – 0.058 mm (0.0010 – 0.0023 in.)
	Exhaust	0.030 – 0.063 mm (0.0012 – 0.0025 in.)
	Maximum	
	Intake	0.10 mm (0.0039 in.)
	Exhaust	0.10 mm (0.0039 in.)
Valve guide bush diameter	Use STD	10.448 – 10.506 mm (0.4129 – 0.4136 in.)
	Use O/S	10.538 – 10.556 mm (0.4149 – 0.4156 in.)
Valve spring free length	Intake	46.4 mm (1.827 in.)
	Exhaust	46.5 mm (1.831 in.)
Valve spring deviation	Maximum	1.6 mm (0.063 in.)
Valve spring angle (reference)	Maximum	2°
Valve overall length	Standard Intake	111.3 mm (4.382 in.)
	Exhaust	111.7 mm (4.392 in.)
	Minimum Intake	110.9 mm (4.366 in.)
	Exhaust	111.3 mm (4.382 in.)
Valve head margin thickness	Standard	1.0 mm (0.039 in.)
	Minimum	0.7 mm (0.028 in.)
Valve rocker shaft diameter		15.965 – 15.985 mm (0.6285 –0.6293 in.)
Camshaft thrust clearance	Standard	0.10 – 0.24 mm (0.0039 – 0.0095 in.)
	Maximum	0.15 mm (0.0059 in.)
Camshaft oil clearance	Standard	0.025 – 0.062 mm (0.001 – 0.0024 in.)
	Maximum	0.062 mm (0.0024 in.)
Water hose union protrusion	Standard A	29 mm (1.14 in.)
	B	69.8 mm (2.748 in.)
	C	24 mm (0.95 in.)
Valve guide bush protrusion height		15.3 – 15.7 mm (0.602 – 0.618 in.)
Connecting rod thrust clearance	Standard	0.160 – 0.342 mm (0.0063 – 0.0135 in.)
	Maximum	0.342 mm (0.0135 in.)
Connecting rod oil clearance	Standard	0.028 – 0.052 mm (0.0011 – 0.0020 in.)
	Maximum	0.080 mm (0.0031 in.)
Connecting rod bearing center wall thickness		
	1	1.482 – 1.486 mm (0.0583 – 0.0585 in.)
	2	1.486 – 1.490 mm (0.0585 – 0.0587 in.)
	3	1.490 – 1.494 mm (0.0587 – 0.0588 in.)
Connecting rod large end bore diameter		
	1	48.000 – 48.008 mm (1.8898 – 1.8901 in.)
	2	48.008 – 48.016 mm (1.8901 – 1.8904 in.)
	3	48.016 – 48.024 mm (1.8904 – 1.8907 in.)

Crankshaft pin outer diameter		44.992 – 45.000 mm (1.7713 – 1.7717 in.)
Crankshaft thrust clearance	Standard	0.04 – 0.24 mm (0.0016 – 0.0094 in.)
	Maximum	0.24 mm (0.0094 in.)
Crankshaft Thrust washer thickness		2.430 – 2.480 mm (0.0957 – 0.0976 in.)
Cylinder block surface warpage	Maximum	0.05 mm (0.0020 in.)
Cylinder bore diameter	Standard	82.000 – 82.013 mm (3.2283 – 3.2289 in.)
	Maximum	82.013 mm (3.2289 in.)
Piston diameter (at 12 mm (0.472 in.) from the piston head)		81.975 – 81.933 mm (3.2274 – 3.2281 in.)
Connecting rod out–of alignment	Maximum per/100 mm (3.94 in.)	0.05 mm (0.0020 in.)
Connecting rod twist	Maximum per/100 mm (3.94 in.)	0.05 mm (0.0020 in.)
Piston oil clearance	Standard	0.007 – 0.038 mm (0.0003 – 0.0015 in.)
	Maximum	0.10 mm (0.0039 in.)
Piston ring groove clearance	No. 1	0.020 – 0.070 mm (0.0009 – 0.0028 in.)
	No. 2	0.030 – 0.070 mm (0.0012 – 0.0028 in.)
Piston ring end gap	Standard	
	No. 1	0.25 – 0.35 mm (0.0098 – 0.0138 in.)
	No. 2	0.35 – 0.50 mm (0.0138 – 0.0197 in.)
	Maximum	
	No. 1	1.05 mm (0.041 in.)
	No. 2	1.20 mm (0.047 in.)
Piston pin diameter		20.004 – 20.016 mm (0.7876 – 0.7880 in.)
Piston bushing inside diameter		20.013 – 20.025 mm (0.7879 – 0.7884 in.)
Connecting rod bushing inside diameter		20.011 – 20.023 mm (0.7878 – 0.7883 in.)
Piston x Piston pin oil clearance		0.005 – 0.013 mm (0.0002 – 0.0005 in.)
Piston x Connecting rod oil clearance		0.005 – 0.009 mm (0.0002 – 0.0004 in.)
Connecting rod bolt diameter	Standard	6.6 – 6.7 mm (0.260 – 0.264 in.)
	Maximum	6.7 mm (0.263 in.)
Crankshaft circle runout	Maximum	0.03 mm (0.0012 in.)
Crankshaft main journal diameter		47.988 – 48.000 mm (1.8893 – 1.8898 in.)
	Maximum taper and out–of–round	0.02 mm (0.0008 in.)
Crank pin diameter		44.992 – 45.000 mm (1.7713 – 1.7717 in.)
	Maximum taper and out–of–round	0.02 mm (0.0008 in.)
Crankshaft bearing cap set bolt diameter	Standard	7.3 – 7.5 mm (0.287 – 0.295 in.)
	Minimum	7.2 mm (0.287 in.)
Crankshaft main journal oil clearance	Standard	0.016 – 0.032 mm (0.0006 – 0.0013 in.)
	Maximum	0.08 mm (0.0031 in.)
Cylinder block main journal bore diameter	0	52.000 – 52.003 mm (2.0472 – 2.0473 in.)
	1	52.003 – 52.005 mm (2.0473 – 2.0474 in.)
	2	52.005 – 52.007 mm (2.0474 – 2.0475 in.)
	3	52.007 – 52.010 mm (2.0475 – 2.0476 in.)
	4	52.010 – 52.012 mm (2.0476 – 2.0477 in.)
	5	52.012 – 52.014 mm (2.0477 – 2.0478 in.)
	6	52.014 – 52.016 mm (2.0478 – 2.0479 in.)
Crankshaft main journal diameter	0	47.998 – 48.000 mm (1.8897 – 1.8898 in.)
	1	47.996 – 47.998 mm (1.8896 – 1.8897 in.)
	2	47.994 – 47.996 mm (1.8895 – 1.8896 in.)
	3	47.992 – 47.994 mm (1.8894 – 1.8895 in.)
	4	47.990 – 47.992 mm (1.8893 – 1.8894 in.)
	5	47.988 – 47.990 mm (1.8892 – 1.8893 in.)
Standard bearing center wall thickness	1	1.989 – 1.992 mm (0.0783 – 0.0784 in.)
	2	1.992 – 1.995 mm (0.0784 – 0.0785 in.)
	3	1.995 – 1.998 mm (0.0785 – 0.0787 in.)
	4	1.998 – 2.001 mm (0.0787 – 0.0788 in.)
	5	2.001 – 2.004 mm (0.0788 – 0.0789 in.)

030QH–01

TORQUE SPECIFICATION

1ZZ–FE

Part Tightened		N·m	kgf·cm	ft·lbf
Cylinder head cover No. 2 x Cylinder head cover sub–assy		7.0	71	62 in.·lbf
Camshaft bearing cap No. 3 x Cylinder head sub–assy		13	133	10
Camshaft bearing cap No. 1 x Cylinder head sub–assy		23	235	17
Camshaft timing gear or sprocket x Camshaft No. 2		54	551	40
Chain tensioner assy No. 1 x Timing chain or belt cover sub–assy		9.0	92	80 in.·lbf
V–ribbed belt tensioner assy x Cylinder block sub–assy		69	704	51
V–ribbed belt tensioner assy x Cylinder head sub–assy		29	296	21
Engine mounting insulator RH x Body		52	530	38
Engine mounting insulator RH x Transverse engine engine mounting bracket		52	530	38
Cylinder head cover sub–assy x Cylinder head sub–assy	A B	11 9.0	112 92	8 80 in.·lbf
Cylinder head cover sub–assy x Timing chain or belt cover sub–assy		11	112	8
Engine wire x Cylinder head cover sub–assy		9.0	92	80 in.·lbf
Ignition coil assy x Cylinder head cover sub–assy		9.0	92	80 in.·lbf
Engine hanger x Cylinder head cover sub–assy		38	387	28
Radio setting condenser x Cylinder head sub–assy		10	102	7
E.F.I. Engine coolant temperature sensor x Cylinder head sub–assy		20	204	15
Exhaust manifold x Cylinder head sub–assy		37	377	27
Exhaust manifold heat insulator No. 1 x Exhaust manifold		18	184	13
Manifold stay x Exhaust manifold		49	500	36
Oxygen sensor x Exhaust manifold		44	450	33
Manifold stay x Cylinder block sub–assy		49	500	36
Transverse engine engine mounting bracket x Timing chain or belt cover sub–assy		47	479	35
Knock control sensor x Cylinder block sub–assy		20	204	15
Crank position sensor x Timing chain or belt cover		9.0	92	80 in.·lbf
Crank position sensor No. 1 x Cylinder head sub–assy		9.0	92	80 in.·lbf
Water inlet x Cylinder block sub–assy		11	112	8
Water by–pass pipe No. 1 x Cylinder block sub–assy		9.0	92	80 in.·lbf
Water by–pass pipe No. 1 x Cylinder head sub–assy		9.0	92	80 in.·lbf
Oil level gage guide x Water by–pass pipe No. 1		13	133	10
Intake manifold x Cylinder head sub–assy		30	306	22
Flywheel sub–assy x Crankshaft	1st 2nd	49 Turn 90°	500 Turn 90°	36 Turn 90°
Drive plate & ring gear sub–assy x Crankshaft		88	897	65
Transverse engine engine mounting bracket front x Transverse engine engine mounting insulator front		52	530	38
Transverse engine engine mounting bracket rear x Transverse engine engine mounting insulator rear		87	887	64
Transverse engine engine mounting bracket LH x Transverse engine engine mounting insulator LH		80	816	59
Transverse engine engine mounting bracket RH x Transverse engine engine mounting insulator RH		52	530	38
Front suspension crossmember sub–assy x Body	Front Rear	113 157	1,152 1,601	83 116
Engine mounting member sub–assy center x Body		39	398	29
Floor panel brace front x Body		30	306	22
Return tube sub–assy x Body	Bolt A Bolt B	5.0 7.8	51 80	44 in.·lbf 69 in.·lbf
Cruise control actuator x Cruise control bracket		6.0	61	53 in.·lbf

Part Tightened		N·m	kgf·cm	ft·lbf
Air cleaner case x Body		7.0	71	62 in.·lbf
Air cleaner case x Transverse engine engine mounting bracket LH		7.0	71	62 in.·lbf
Battery carrier x Body		13	133	10
Battery clamp sub–assy x Body		5.0	51	44 in.·lbf
Battery clamp sub–assy x Battery clamp bolt		30 – 4.0	31 – 41	27 – 35 in.·lbf
Radiator support upper x Body		19	194	14
Front wheel RH & LH x Front axle hub sub–assy RH & LH		103	1,050	76
Oil strainer sub–assy x Cylinder block sub–assy		9.0	92	80 in.·lbf
Oil pan sub–assy x Cylinder block sub–assy		9.0	92	80 in.·lbf
Oil pan drain plug x Oil pan sub–assy		37	377	27
Camshaft timing gear assy x Camshaft		54	551	40
Oil control valve filter x Cylinder head sub–assy		30	306	22
Oil pump assy x Cylinder block sub–assy		9.0	92	80 in.·lbf
Timing chain cover sub–assy x Stud bolt		5.0	51	44 in.·lbf
Water pump assy x Timing chain cover sub–assy	A	9.0	92	80 in.·lbf
	B	11	112	8
Spark plug x Cylinder head sub–assy		25	255	18
Ventilation valve sub–assy x Cylinder head cover sub–assy		30	306	22
Chain tensioner slipper x Cylinder block sub–assy		19	194	14
Timing chain or belt cover sub–assy x Cylinder head sub–assy		13	133	10
Timing chain or belt cover sub–assy x Cylinder block sub–assy	M6	13	133	10
	M8	19	194	14
Crankshaft pulley x Crankshaft		138	1,407	102
Cylinder head sub–assy x Cylinder block sub–assy	1st	49	500	36
	2nd	Turn 90°	Turn 90°	Turn 90°
Camshaft timing oil control valve assy x Cylinder head sub–assy		9.0	92	80 in.·lbf
Chain vibration damper No. 1 x Cylinder head sub–assy		9.0	92	80 in.·lbf
Chain vibration damper No. 1 x Cylinder block sub–assy		9.0	92	80 in.·lbf
Cylinder head sub–assy x Stud bolt	A, D and E	9.5	97	84 in.·lbf
	B and C	5.0	51	44 in.·lbf
W/ Head taper screw plug No. 2 x Cylinder head sub–assy		44	449	33
Cylinder block sub–assy x Stud bolt	A, C, D and E	5.0	51	44 in.·lbf
	B	11	112	8
Crankshaft bearing cap x Cylinder block sub–assy	1st	44	449	33
	2nd	Turn 90°	Turn 90°	Turn 90°
	Others	19	194	14
Connecting rod cap x Connecting rod		20	204	15
Cylinder block water drain cock sub–assy x Cylinder block sub–assy		25	255	18

2ZZ–GE

Part Tightened		N·m	kgf·cm	ft·lbf
Suction hose bracket x Body		9.8	100	87 in.·lbf
Wire harness clamp x Cylinder head cover		10	102	7
Ignition coil x Cylinder head cover		9.0	92	80 in.·lbf
Cylinder head cover No. 2 x cylinder head cover		7.0	71	62 in.·lbf
Engine hanger x Cylinder head		38	387	28
Camshaft timing gear or sprocket x Camshaft		54	551	40
Camshaft timing gear assy x Camshaft		54	551	40
Chain vibration damper No. 1 x Cylinder block		21	214	15
Chain tensioner slipper x Cylinder block		21	214	15
Timing chain or belt cover sub–assy x Cylinder head x Cylinder block	M8	21	214	15
	M6	11	112	8
	Stud (E8)	9.5	97	84 in.·lbf

Part Tightened		N·m	kgf·cm	ft·lbf
Transverse engine engine mounting bracket x Timing chain or belt cover sub–assy		49	500	36
Crank position sensor x Timing chain or belt cover sub–assy		9.0	92	80 in.·lbf
Crankshaft pulley x Crankshaft		118	1,203	87
Chain tensioner assy No. 1 x Timing chain or belt cover sub–assy		9.0	92	80 in.·lbf
Cylinder head cover sub–assy x Cylinder head		10	102	7
No. 1 ventilation pipe x Cylinder head cover sub–assy		10	102	7
No. 1 ventilation pipe x Intake manifold		24	245	18
Camshaft bearing cap x Cylinder head		19	194	14
Valve rocker shaft x Cylinder head		9.0	92	80 in.·lbf
Camshaft timing oil control valve assy x Cylinder head		9.0	92	80 in.·lbf
Cam timing control valve housing x Cylinder head		9.0	92	80 in.·lbf
Engine oil pressure switch x Cylinder head		13	133	9
Oil control valve filter x Cylinder head		29	296	21
Cylinder head x Cylinder block	1st	35	357	26
	2nd	Turn 180°	Turn 180°	Turn 180°
Intake manifold x Cylinder head	Bolt A	34	347	25
	Bolt B	46	469	34
Surge tank stay No. 1 x Intake manifold		24	245	18
Exhaust manifold x Cylinder head		50	510	37
Exhaust manifold heat insulator No. 1 x Exhaust manifold		21	214	15
V–ribbed belt tensioner assy x Cylinder head	Bolt	100	1,020	74
	Nut	29	296	21
Oil level gage guide x Intake manifold		24	245	18
Exhaust manifold stay		50	510	37
Front engine mounting bracket x Engine mounting member		52	530	38
Rear engine mounting bracket x Suspension member		87	887	64
Engine mounting insulator sub–assy LH x Body		80	816	60
Engine mounting insulator sub–assy RH x Body		52	531	38
Suspension member x Body	Bolt A	157	1,601	116
	Bolt B	113	1,152	83
Engine mounting member x Body		39	398	29
Return tube sub–assy x Body	Bolt A	5.0	51	44 in.·lbf
	Bolt B	7.8	80	69 in.·lbf
Generator bracket No. 1 x Generator x Intake manifold		29	296	21
Battery carrier x Body		13	132	10
Cruise control actuator x Cruise control bracket		6.0	61	53 in.·lbf
Air cleaner case		7.0	71	62 in.·lbf
Crankshaft bearing cap sub–assembly x Cylinder block	12 pointed head 1st	22	224	16
	2nd	44	449	32
	3rd	Turn 45°	Turn 45°	Turn 45°
	4th	Turn 45°	Turn 45°	Turn 45°
	Hexagon head	18	184	13
Screw plug x Crankshaft bearing cap sub–assembly		43	438	32
Connecting rod cap x Connecting rod sub–assy	1st	30	306	22
	2nd	Turn 90°	Turn 90°	Turn 90°
Oil strainer x Crankshaft cap		9.0	92	80 in.·lbf
Oil pan baffle plate x Crankshaft cap		9.0	92	80 in.·lbf
Oil pan x Crankshaft bearing cap sub–assembly		9.0	92	80 in.·lbf
Oil pan drain plug x Oil pan		37	378	28
Oil pump x Cylinder block		9.0	92	80 in.·lbf
Water pump x Timing chain or belt cover sub–assy x Cylinder block		9.0	92	80 in.·lbf
Water pump pulley x Water pump		15	153	11

Part Tightened		N·m	kgf·cm	ft·lbf
Spark plug x Cylinder head		18	184	13
Ventilation valve sub–assy x Cylinder head cover sub–assy		27	275	20
Stud bolt x Cylinder head	A, B, D and E	9.5	97	84 in.·lbf
	C	5.0	51	44 in.·lbf
	F	19	194	14
W/ head taper screw plug No. 1 x Cylinder head		78	796	58
Sub–assy oil nozzle No. 1 x Cylinder block		9.0	92	80 in.·lbf
Oil filter union x Crankshaft cap		30	306	22
Cylinder block water drain cock sub–assy x Cylinder block		25	255	18
E. F. I. engine coolant temperature sensor x Cylinder head		20	208	15
Cam position sensor x Cylinder head		9.0	92	80 in.·lbf
Knock control sensor x Cylinder block		20	204	15
Ventilation case		8.5	87	75 in.·lbf
Water bypass pipe No. 1 x Cylinder block x Cylinder head	M6	8.5	87	75 in.·lbf
	M8	21	214	15
	Nut	10	102	7
Fly wheel sub–assy x Crankshaft	1st	49	500	36
	2nd	Turn 90°	Turn 90°	Turn 90°
Drive plate & ring gear sub–assy x Crankshaft		88	897	65
Front wheel		103	1,050	76

DIFFERENTIAL

SERVICE DATA

030RR–01

Rear differential	Oil diaphragm seal drive in depth		0.7 – 1.3 mm (0.03 – 0.05 in.)
	Side gear shaft oil seal drive in depth		4.2 – 4.8 mm (0.165 – 0.189 in.)
	Transmission coupling vertically	Maximum	0.05 mm (0.002 in.)
	Transmission coupling horizontally	Minimum	0.05 mm (0.002 in.)
	Drive pinion to ring gear backlash		0.10 – 0.15 mm (0.0039 – 0.0059 in.)
	Side gear backlash		0.05 – 0.20 mm (0.002 – 0.0079 in.)
	Drive pinion preload (at starting)	New bearing	0.7 – 1.3 N·m (7 – 13 kgf·cm, 6 – 11 in.·lbf)
		Reused bearing	0.4 – 0.7 N·m (4 – 7 kgf·cm, 3 – 6 in.·lbf)
	Total preload (Drive pinion preload plus)		0.3 – 0.5 N·m (3 – 5 kgf·cm, 2.6 – 4.3 in.·lbf)
	Side gear thrust washer thickness	mm (in.)	1.48 – 1.52 (0.0583 – 0.0598) 1.53 – 1.57 (0.0602 – 0.0618) 1.58 – 1.62 (0.0622 – 0.0638) 1.63 – 1.67 (0.0642 – 0.0657) 1.68 – 1.72 (0.0661 – 0.0677) 1.73 – 1.77 (0.0681 – 0.0697)
	Side gear shaft washer thickness	mm (in.)	25 1.59 – 1.61 (0.0626 – 0.0634) 26 1.62 – 1.64 (0.0638 – 0.0646) 27 1.65 – 1.67 (0.0650 – 0.0657) 28 1.68 – 1.70 (0.0661 – 0.0669) 29 1.71 – 1.73 (0.0673 – 0.0681) 30 1.74 – 1.76 (0.0685 – 0.0693) 31 1.77 – 1.79 (0.0697 – 0.0705) 32 1.80 – 1.82 (0.0709 – 0.0717) 33 1.83 – 1.85 (0.0720 – 0.0728) 34 1.86 – 1.88 (0.0732 – 0.0740) 35 1.89 – 1.91 (0.0744 – 0.0752) 36 1.92 – 1.94 (0.0756 – 0.0764) 37 1.95 – 1.97 (0.0768 – 0.0776) 38 1.98 – 2.00 (0.0780 – 0.0787) 39 2.01 – 2.03 (0.0791 – 0.0799) 40 2.04 – 2.06 (0.0803 – 0.0811) 41 2.07 – 2.09 (0.0815 – 0.0823) 42 2.10 – 2.12 (0.0827 – 0.0835) 43 2.13 – 2.15 (0.0839 – 0.0846) 44 2.16 – 2.18 (0.0850 – 0.0858) 45 2.19 – 2.21 (0.0862 – 0.0870) 46 2.22 – 2.24 (0.0874 – 0.0882) 47 2.25 – 2.27 (0.0886 – 0.0894) 48 2.28 – 2.30 (0.0898 – 0.0906) 49 2.31 – 2.33 (0.0909 – 0.0917) 50 2.34 – 2.36 (0.0921 – 0.0929) 51 2.37 – 2.39 (0.0933 – 0.0941) 52 2.40 – 2.42 (0.0945 – 0.0953) 53 2.43 – 2.45 (0.0957 – 0.0965) 54 2.46 – 2.48 (0.0969 – 0.0976) 55 2.49 – 2.51 (0.0980 – 0.0988) 56 2.52 – 2.54 (0.0992 – 0.1000) 57 2.55 – 2.57 (0.1004 – 0.1012) 58 2.58 – 2.60 (0.1016 – 0.1024) 59 2.61 – 2.63 (0.1028 – 0.1035) 60 2.64 – 2.68 (0.1039 – 0.1047)

Rear differential	Drive pinion washer thickness	mm (in.)	41	1.695 – 1.705 (0.0667 – 0.0671)
			42	1.705 – 1.715 (0.0671 – 0.0675)
			43	1.715 – 1.725 (0.0675 – 0.0679)
			44	1.725 – 1.735 (0.0679 – 0.0683)
			45	1.735 – 1.745 (0.0683 – 0.0687)
			46	1.745 – 1.755 (0.0687 – 0.0691)
			47	1.755 – 1.765 (0.0691 – 0.0695)
			48	1.765 – 1.775 (0.0695 – 0.0699)
			49	1.775 – 1.785 (0.0699 – 0.0703)
			50	1.785 – 1.795 (0.0703 – 0.0707)
			51	1.795 – 1.805 (0.0707 – 0.0711)
			52	1.805 – 1.815 (0.0711 – 0.0715)
			53	1.815 – 1.825 (0.0715 – 0.0719)
			54	1.825 – 1.835 (0.0719 – 0.0722)
			55	1.835 – 1.845 (0.0722 – 0.0726)
			56	1.845 – 1.855 (0.0726 – 0.0730)
			57	1.855 – 1.865 (0.0730 – 0.0734)
			58	1.865 – 1.875 (0.0734 – 0.0738)
			59	1.875 – 1.885 (0.0738 – 0.0742)
			60	1.885 – 1.895 (0.0742 – 0.0746)
			61	1.895 – 1.905 (0.0746 – 0.0750)
			62	1.905 – 1.915 (0.0750 – 0.0754)
			63	1.915 – 1.925 (0.0754 – 0.0758)
			64	1.925 – 1.935 (0.0758 – 0.0762)
			65	1.935 – 1.945 (0.0762 – 0.0766)
			70	1.945 – 1.955 (0.0766 – 0.0770)
			71	1.955 – 1.965 (0.0770 – 0.0774)
			72	1.965 – 1.975 (0.0774 – 0.0778)
			73	1.975 – 1.985 (0.0778 – 0.0781)
			74	1.985 – 1.995 (0.0781 – 0.0785)
			75	1.995 – 2.005 (0.0785 – 0.0789)
			76	2.005 – 2.015 (0.0789 – 0.0793)
			77	2.015 – 2.025 (0.0793 – 0.0797)
			78	2.025 – 2.035 (0.0797 – 0.0801)
			79	2.035 – 2.045 (0.0801 – 0.0805)
			80	2.045 – 2.055 (0.0805 – 0.0809)
			81	2.055 – 2.065 (0.0809 – 0.0813)
			82	2.065 – 2.075 (0.0813 – 0.0817)
			83	2.075 – 2.085 (0.0817 – 0.0821)
			84	2.085 – 2.095 (0.0821 – 0.0825)
			85	2.095 – 2.105 (0.0825 – 0.0829)
			86	2.105 – 2.115 (0.0829 – 0.0833)
			87	2.115 – 2.125 (0.0833 – 0.0837)
			88	2.125 – 2.135 (0.0837 – 0.0841)
			89	2.135 – 2.145 (0.0841 – 0.0844)
			90	2.145 – 2.155 (0.0844 – 0.0848)
			91	2.155 – 2.165 (0.0848 – 0.0852)
			92	2.165 – 2.175 (0.0852 – 0.0856)
			93	2.175 – 2.185 (0.0856 – 0.0860)
			94	2.185 – 2.195 (0.0860 – 0.0864)
			95	2.195 – 2.205 (0.0864 – 0.0868)

030RS–01

TORQUE SPECIFICATION

Part tightened	N·m	kgf·cm	ft·lbf
Rear differential drain plug	39	398	29
Rear differential filler plug	39	398	29
Rear differential filler plug (inspection plug)	98	1,000	72
Propeller shaft x Transmission coupling	74	750	54
Differential support No.1 x Differential carrier assy rear	103	1,050	76
Differential support x Differential carrier assy rear	167	1,700	123
Differential support No.1 x Rear suspension member	118	1,200	87
Differential support x Rear suspension member	137	1,400	101
Differential carrier cover x Differential carrier	20	204	15
Drive pinion nut	223 (245)	2,270 (2,500)	164 (181)
Side bearing retainer x Differential carrier	42	430	31
Side bearing retainer x Oil deflector	4.9	50	43 in.·lbf
Differential case x Differential ring gear	78	795	58

( ): For use without SST

WIPER & WASHER

TORQUE SPECIFICATION

030R4–01

Part Tightened	N·m	kgf·cm	ft·lbf
Wind shield wiper motor assy × Wiper link assy	7.5	76	66 in.·lbf
Wiper link assy × Body	5.5	56	49 in.·lbf
FR Wiper arm RH × Wiper link	20.5	209	15
FR Wiper arm LH × Wiper link	20.5	209	15
RR wiper motor assy × Bracket	5.5	56	49 in.·lbf
RR wiper motor & bracket assy × Back door glass	5.5	56	49 in.·lbf
W/washer packing nut rear wiper link pivot × Back door glass	7.0	71	62 in.·lbf
RR Wiper arm assy × RR wiper motor assy	5.5	56	49 in.·lbf

REAR SUSPENSION

030QQ–02

SERVICE DATA

Rear wheel alignment (FF)	Toe–in (total)	0°16’ ± 16’ (0.26° ± 0.26°, 2.8 ± 2.7 mm, 0.11 ± 0.11 in.)
	Camber Right–left error	–1°27’ ± 30’ (–1.45° ± 0.5°) 30’ (0.5°) or less
Rear wheel alignment (4WD)	Toe–in (total)	0°12’ ± 12’ (0.20° ± 0.20°, 2.0 ± 2.0 mm, 0.08 ± 0.08 in.)
	Camber Right–left error	–0°44’ ± 45’ (–0.73° ± 0.75°) 45’ (0.75°) or less
Rear suspension	Stabilizer bar link ball joint turning torque	0.05 – 1.0 N·m (0.5 – 10 kgf·cm, 0.4 – 8.7 in.·lbf)

REAR SUSPENSION

TORQUE SPECIFICATION

030QR–01

Part Tightened		N·m	kgf·cm	ft·lbf
Hub nut		103	1,050	76
Piston rod set nut		56	571	41
Shock absorber x Body		80	816	59
Shock absorber x Rear axle beam (FF)		80	816	59
Shock absorber x Rear suspension arm (4WD)		140	1,428	103
Parking brake cable set bolt		5.4	55	48 in.·lbf
Rear axle hub set bolt (FF)		61	622	45
Rear axle hub set bolt (4WD)		56	571	41
Skid control sensor wire harness bracket set bolt (FF)		5.0	51	44 in.·lbf
Rear axle beam x Body (FF)		85	867	63
Rear suspension arm x body (4WD)		65	663	48
Rear suspension arm x Rear suspension member (4WD)		74	755	55
Rear axle carrier x Rear suspension arm (4WD)		74	755	55
Rear suspension member set bolt and nut (4WD)		105	1,071	77
Speed sensor set bolt and nut (4WD)	(A)	8.0	82	71 in.·lbf
	(B)	5.0	51	44 in.·lbf
Upper control arm x Body (4WD)		74	755	55
Upper control arm x Rear axle carrier (4WD)		74	755	55
Stabilizer bar x Rear axle beam (FF)		195	1,988	144
Stabilizer bar x Rear suspension member (4WD)		18	184	13
Stabilizer bar x Stabilizer link (4WD)		44	449	32

STEERING COLUMN

030RI–01

SERVICE DATA

STEERING SYSTEM		
Steering wheel freeplay	Maximum	30 mm (1.18 in.)

030RJ–01

TORQUE SPECIFICATION

Part Tightened	N·m	kgf·cm	ft·lbf
Sliding yoke x Steering intermediate shaft	35	360	26
Sliding yoke x Steering column assy	35	360	26
Steering column assy set bolt	21	210	15
Steering wheel set nut	50	510	37
Steering wheel pad set screw (Torx screw)	8.8	90	78 in.·lbf

MANUAL TRANSMISSION / TRANSAXLE

030RF–01

SERVICE DATA

MANUAL TRANSAXLE ASSY (C59)		
5th gear thrust clearance	STD:	0.10 – 0.57 mm (0.0039 – 0.0224 in.)
	MAX:	0.57 mm (0.0224 in.)
5th gear radial clearance	KOYO made STD:	0.015 – 0.058 mm (0.0006 – 0.0023 in.)
	MAX:	0.058 mm (0.0023 in.)
	NSK made STD:	0.015 – 0.056 mm (0.0006 – 0.0022 in.)
	MAX:	0.056 mm (0.0022 in.)
Synchronizer ring No.3 back and 5th gear spline end clearance	Min:	0.75 mm (0.0295 in.)
Transmission hub sleeve No.3 and gear shift fork No.3 clearance	STD:	0.3 – 0.5 mm (0.012 – 0.0197 in.)
5th gear inner diameter	STD:	29.915 – 29.931mm (1.1778 – 1.1784 in.)
	MAX:	29.931mm (1.1784 in.)
Reverse idler gear sub–assy inner diameter	STD:	18.040 – 18.058 mm (0.7102 – 0.7109 in.)
	MAX:	18.058 mm (0.7109 in.)
Reverse idler gear shaft outer diameter	STD:	17.966 – 17.984 mm (0.7073 – 0.7080 in.)
	Min:	17.966 mm (0.7073 in.)
Front transaxle case oil seal drive in depth		15.6 – 16.0 mm (0.6142 – 0.6299 in.)
Input shaft front bearing drive in depth		0 – 0.3 mm (0 – 0.012 in.)
Front differential case tapered roller bearing preload	New bearing	0.78 – 1.57 N·m (8 – 16 kgf·cm, 6.9 – 13.9 in.·lbf)
Front differential case shim thickness	AA:	2.10 mm (0.0827 in.)
	BB:	2.15 mm (0.0846 in.)
	CC:	2.20 mm (0.0866 in.)
	DD:	2.25 mm (0.0886 in.)
	EE:	2.30 mm (0.0906 in.)
	FF:	2.35 mm (0.0925 in.)
	GG:	2.40 mm (0.0945 in.)
	HH:	2.45 mm (0.0965 in.)
	JJ:	2.50 mm (0.0984 in.)
	KK:	2.55 mm (0.1004 in.)
	LL:	2.60 mm (0.1024 in.)
	MM:	2.65 mm (0.1043 in.)
	NN:	2.70 mm (0.1063 in.)
	PP:	2.75 mm (0.1083 in.)
	QQ:	2.80 mm (0.1102 in.)
	RR:	2.85 mm (0.1122 in.)
	SS:	2.90 mm (0.1142 in.)
	TT:	2.95 mm (0.1161 in.)
	UU:	3.00 mm (0.1181 in.)
Transmission case oil seal drive in depth		9.9 ± 0.3 mm (0.390 ± 0.012 in.)
Transaxle case oil seal drive in depth		1.9 ± 0.3 mm (0.075 ± 0.012 in.)
Reverse restrict pin slotted pin drive in depth		15.5 ± 16.5 mm (0.6102 ± 0.6496 in.)
Transmission clutch hub No.3 snap ring thickness	A:	2.25 mm (0.0886 in.)
	B:	2.31 mm (0.0909 in.)
	C:	2.37 mm (0.0933 in.)
	D:	2.43 mm (0.0957 in.)
	E:	2.49 mm (0.0980 in.)
	F:	2.55 mm (0.1004 in.)
	G:	2.61 mm (0.1028 in.)
MANUAL TRANSAXLE ASSY (C60)		
6th gear thrust clearance	STD:	0.10 – 0.60 mm (0.0039 – 0.0236 in.)
	MAX:	0.60 mm (0.0236 in.)
5th gear thrust clearance	STD:	0.10 – 0.62 mm (0.0039 – 0.0244 in.)
	MAX:	0.62 mm (0.0244 in.)
6th gear thrust clearance	STD:	0.009 – 0.050 mm (0.0004 – 0.0020 in.)
	MAX:	0.050 mm (0.0020 in.)

5th gear radial clearance	STD: MAX:	0.015 – 0.056 mm (0.0006 – 0.0022 in.) 0.056 mm (0.0022 in.)
Synchronizer ring No.3 back and 5th gear spline end clearance	STD: Min:	0.75 – 1.65 mm (0.0295 – 0.065 in.) 1.65 mm (0.065 in)
Transmission hub sleeve No.3 and gear shift fork No.3 clearance	STD:	0.31 – 0.89 mm (0.0122 – 0.035 in.)
6th gear inner diameter	STD: MAX:	28.015 – 28.031mm (1.1030 – 1.1036 in.) 28.031mm (1.1036 in.)
5th gear inner diameter	STD: MAX:	29.915 – 29.931mm (1.1778 – 1.1784 in.) 29.931mm (1.1784 in.)
Reverse idler gear sub–assy inner diameter	STD: MAX:	18.040 – 18.058 mm (0.7102 – 0.7109 in.) 18.058 mm (0.7109 in.)
Reverse idler gear shaft outer diameter	STD: Min:	17.966 – 17.984 mm (0.7073 – 0.7080 in.) 17.966 mm (0.7073 in.)
Front transaxle case oil seal drive in depth		15.6 – 16.0 mm (0.6142 – 0.6299 in.)
Input shaft front bearing drive in depth		0 – 0.3 mm (0 – 0.012 in.)
Front differential case tapered roller bearing preload	New bearing Used bearing	0.78 – 1.57 N·m (8 – 16 kgf·cm, 7 – 14 in.·lbf) 0.49 – 0.98 N·m (5 – 10 kgf·cm, 4 – 9 in.·lbf)
Front differential case shim thickness	AA: BB: CC: DD: EE: FF: GG: HH: JJ: KK: LL: MM: NN: PP: QQ: RR: SS: TT: UU:	2.10 mm (0.0827 in.) 2.15 mm (0.0846 in.) 2.20 mm (0.0866 in.) 2.25 mm (0.0886 in.) 2.30 mm (0.0906 in.) 2.35 mm (0.0925 in.) 2.40 mm (0.0945 in.) 2.45 mm (0.0965 in.) 2.50 mm (0.0984 in.) 2.55 mm (0.1004 in.) 2.60 mm (0.1024 in.) 2.65 mm (0.1043 in.) 2.70 mm (0.1063 in.) 2.75 mm (0.1083 in.) 2.80 mm (0.1102 in.) 2.85 mm (0.1122 in.) 2.90 mm (0.1142 in.) 2.95 mm (0.1161 in.) 3.00 mm (0.1181 in.)
Transmission case oil seal drive in depth		9.9 ± 0.3 mm (0.390 ± 0.012 in.)
Transaxle case oil seal drive in depth		1.9 ± 0.3 mm (0.075 ± 0.012 in.)
Reverse restrict pin slotted pin drive in depth		15.5 ± 16.5 mm (0.6102 ± 0.6496 in.)
Transmission clutch hub No.3 snap ring clearance		0.1 mm or less (0.004 in. or less)
Transmission clutch hub No.3 snap ring thickness	A: B: C: D: E: F: G: H: J:	1.75 mm (0.0689 in.) 1.80 mm (0.0709 in.) 1.85 mm (0.0728 in.) 1.90 mm (0.0748 in.) 1.95 mm (0.0768 in.) 2.00 mm (0.0787 in.) 2.05 mm (0.0807 in.) 2.10 mm (0.0827 in.) 2.15 mm (0.0846 in.)
Intput shaft radial ball bearing snap ring clearance		0.1 mm or less (0.004 in. or less)

Intput shaft radial ball bearing snap ring thickness	A:	1.70 mm (0.0669 in.)
	B:	1.75 mm (0.0689 in.)
	C:	1.80 mm (0.0709 in.)
	D:	1.85 mm (0.0728 in.)
	E:	1.90 mm (0.0748 in.)
	F:	1.95 mm (0.0768 in.)
	G:	2.00 mm (0.0787 in.)
	H:	2.05 mm (0.0807 in.)
	J:	2.10 mm (0.0827 in.)
	K:	2.15 mm (0.0846 in.)
	L:	2.20 mm (0.0866 in.)
	M:	2.25 mm (0.0886 in.)
Output shaft radial ball bearing snap ring clearance		0.1 mm or less (0.004 in. or less)
Output shaft radial ball bearing snap ring thickness	B:	2.31 mm (0.0909 in.)
	C:	2.37 mm (0.0933 in.)
	D:	2.43 mm (0.0957 in.)
	E:	2.49 mm (0.0980 in.)
	F:	2.55 mm (0.1004 in.)
	G:	2.61 mm (0.1028 in.)
	H:	2.67 mm (0.1051 in.)
	J:	2.73 mm (0.1075 in.)
	K:	2.79 mm (0.1098 in.)
	L:	2.85 mm (0.1122 in.)
	M:	2.91 mm (0.1146 in.)
INPUT SHAFT ASSY (C59)		
4th gear thrust clearance	STD:	0.10 – 0.55 mm (0.0039 – 0.0217 in.)
	MAX:	0.55 mm (0.0217 in.)
3rd gear thrust clearance	STD:	0.10 – 0.35 mm (0.0039 – 0.0138 in.)
	MAX:	0.35 mm (0.0138 in.)
4th gear radial clearance	KOYO made STD:	0.015 – 0.058 mm (0.0006 – 0.0023 in.)
	MAX:	0.058 mm (0.0023 in.)
	NSK made STD:	0.015 – 0.056 mm (0.0006 – 0.0022 in.)
	MAX:	0.056 mm (0.0022 in.)
3rd gear radial clearance	KOYO made STD:	0.015 – 0.058 mm (0.0006 – 0.0023 in.)
	MAX:	0.058 mm (0.0023 in.)
	NSK made STD:	0.015 – 0.056 mm (0.0006 – 0.0022 in.)
	MAX:	0.056 mm (0.0022 in.)
Input shaft run out	MAX:	0.015 mm (0.0006 in.)
Input shaft outer diameter	STD: A	24.885 – 24.900 mm (0.9797 – 0.9803 in.)
	B	28.985 – 29.000 mm (1.1411 – 1.1417 in.)
	C	30.985 – 31.000 mm (1.2198 – 1.2204 in.)
	D	24.985 – 25.000 mm (0.9836 – 0.9842 in.)
	Min: A	24.885 mm (0.9797 in.)
	B	28.985 mm (1.1411 in.)
	C	30.985 mm (1.2198 in.)
	D	24.985 mm (0.9836 in.)
4th gear inside diameter	STD:	34.015 – 34.031 mm (1.3391 – 1.3398 in.)
	MAX:	34.031 mm (1.3398 in.)
3rd gear inside diameter	STD:	36.015 – 36.031 mm (1.4179 – 1.4185 in.)
	MAX:	36.031 mm (1.4185 in.)
3rd gear synchronizer ring back and 3rd gear spline end clearance	Min:	0.65 mm (0.0256 in.)
4th gear synchronizer ring back and 3rd gear spline end clearance	Min:	0.75 mm (0.0295 in.)
Gear shift fork No.2 claw and glove of the transmission hub sleeve No.2 clearance		0.15 – 0.35 mm (0.0059 – 0.0137 in.)
Transmission clutch hub No.2 snap ring thickness	0:	2.30 mm (0.0906 in.)
	1:	2.36 mm (0.0929 in.)
	2:	2.42 mm (0.0953 in.)
	3:	2.48 mm (0.0976 in.)
	4:	2.54 mm (0.1000 in.)
	5:	2.60 mm (0.1024 in.)

Input shaft rear radial ball bearing snap ring	0: 1: 2: 3: 4: 5:	2.29 mm (0.0901 in.) 2.35 mm (0.0925 in.) 2.41 mm (0.0948 in.) 2.47 mm (0.0972 in.) 2.53 mm (0.0996 in.) 2.59 mm (0.1019 in.)
INPUT SHAFT ASSY (C60)		
4th gear thrust clearance	STD:	0.10 – 0.55 mm (0.0039 – 0.0217 in.)
3rd gear thrust clearance	STD:	0.10 – 0.35 mm (0.0039 – 0.0138 in.)
4th gear radial clearance	KOYO made: NSK made:	0.015 – 0.058 mm (0.0006 – 0.0023 in.) 0.015 – 0.056 mm (0.0006 – 0.0022 in.)
3rd gear radial clearance	KOYO made: NSK made STD:	0.015 – 0.058 mm (0.0006 – 0.0023 in.) 0.015 – 0.056 mm (0.0006 – 0.0022 in.)
Input shaft run out	MAX:	0.015 mm (0.0006 in.)
Input shaft outer diameter	New shaft part A: B: C: D: Min part A: B: C: D:	21.991 – 21.006 mm (0.8658 – 0.8270 in.) 24.885 – 24.900 mm (0.9797 – 0.9803 in.) 28.985 – 29.000 mm (1.1411 – 1.1417 in.) 30.985 – 31.000 mm (1.2199 – 1.2205 in.) 21.991 mm (0.8658 in.) 24.885 mm (0.9797 in.) 28.985 mm (1.1411 in.) 30.985 mm (1.2199 in.)
4th gear inside diameter	STD: MAX:	34.015 – 34.031 mm (1.3391 – 1.3398 in.) 34.031 mm (1.3398 in.)
3rd gear inside diameter	STD: MAX:	36.015 – 36.031 mm (1.4179 – 1.4185 in.) 36.031 mm (1.4185 in.)
3rd gear synchronizer ring back and 3rd gear spline end clearance	Min:	0.65 mm (0.0256 in.)
4th gear synchronizer ring back and 3rd gear spline end clearance	Min:	0.75 mm (0.0295 in.)
Gear shift fork No.2 claw and glove of the transmission hub sleeve No.2 clearance		0.15 – 0.35 mm (0.0059 – 0.0137 in.)
Transmission clutch hub No.2 snap ring clearance		0.1 mm (0.004 in.) or less
Transmission clutch hub No.2 snap ring thickness	0: 1: 2: 3: 4: 5:	2.30 mm (0.0906 in.) 2.36 mm (0.0929 in.) 2.42 mm (0.0953 in.) 2.48 mm (0.0976 in.) 2.54 mm (0.1000 in.) 2.60 mm (0.1024 in.)
Input shaft bearing snap ring clearance		0.1 mm (0.004 in.) or less
Input shaft rear radial ball bearing snap ring	0: 1: 2: 3: 4: 5:	2.29 mm (0.0901 in.) 2.35 mm (0.0925 in.) 2.41 mm (0.0948 in.) 2.47 mm (0.0972 in.) 2.53 mm (0.0996 in.) 2.59 mm (0.1019 in.)
OUTPUT SHAFT ASSY (C59)		
1st gear thrust clearance	STD:	0.10 – 0.40 mm (0.0039 – 0.0157 in.)
2nd gear thrust clearance	STD:	0.10 – 0.45 mm (0.0039 – 0.0177 in.)
1st gear radial clearance	KOYO made: NSK made:	0.015 – 0.058 mm (0.0006 – 0.0023 in.) 0.015 – 0.056 mm (0.0006 – 0.0022 in.)
1st gear radial clearance	KOYO made: NSK made:	0.015 – 0.058 mm (0.0006 – 0.0023 in.) 0.015 – 0.056 mm (0.0006 – 0.0022 in.)
Output shaft maximum run out		0.015 mm (0.0006 in.)
Output shaft outer diameter	Part: A B C	31.985 mm (1.2592 in.) 37.985 mm (1.4955 in.) 32.985 mm (1.2986 in.)
2nd gear inside diameter	New: MAX:	38.015 – 38.031 mm (1.4967 – 1.4973 in.) 38.031 mm (1.4973 in.)

1st gear inside diameter	New: MAX:	44.015 – 44.031 mm (1.7329 – 1.7335 in.) 44.031 mm (1.7335 in.)
1st gear thrust washer thickness	New: Min:	5.975 – 6.025 mm (0.2352 – 0.2372 in.) 5.975 mm (0.2352 in.)
Synchronizer ring set No.2 back and 2nd gear spline end clearance		0.7 – 1.3 mm (0.0276 – 0.0512 in.)
Synchronizer ring set No.1 back and 2nd gear spline end clearance		0.75 – 1.65 mm (0.0295 – 0.065 in.)
Reverse gear glove and reverse gear shift fork claw clearance		0.15 – 0.35 mm (0.0059 – 0.0138 in.)
Output shaft front bearing snap ring thickness	7: 8: 1: 2: 3: 4: 5: 6:	1.85 – 1.90 mm (0.728 – 0.0748 in.) 1.90 – 1.95 mm (0.748 – 0.0768 in.) 1.95 – 2.00 mm (0.768 – 0.0787 in.) 2.00 – 2.05 mm (0.787 – 0.0807 in.) 2.05 – 2.10 mm (0.807 – 0.0827 in.) 2.10 – 2.15 mm (0.827 – 0.0846 in.) 2.15 – 2.20 mm (0.846 – 0.0866 in.) 2.20 – 2.25 mm (0.866 – 0.0886 in.)
Transmission clutch hub No.1 snap ring thickness	A: B: C: D: E: F:	2.50 mm (0.0984 in.) 2.56 mm (0.1008 in.) 2.62 mm (0.1031 in.) 2.68 mm (0.1055 in.) 2.74 mm (0.1079 in.) 2.80 mm (0.1102 in.)
OUTPUT SHAFT ASSY (C60)		
1st gear thrust clearance	STD:	0.10 – 0.40 mm (0.0039 – 0.0157 in.)
2nd gear thrust clearance	STD:	0.10 – 0.55 mm (0.0039 – 0.0217 in.)
1st gear radial clearance	KOYO made: NSK made:	0.015 – 0.058 mm (0.0006 – 0.0023 in.) 0.015 – 0.056 mm (0.0006 – 0.0022 in.)
1st gear radial clearance	KOYO made: NSK made:	0.015 – 0.058 mm (0.0006 – 0.0023 in.) 0.015 – 0.056 mm (0.0006 – 0.0022 in.)
Output shaft maximum run out		0.015 mm (0.0006 in.)
Output shaft outer diameter	New shaft A: B: Min A: B:	31.985 – 32.000 mm (1.2592 – 1.2598 in.) 37.985 – 38.000 mm (1.4955 – 1.4961 in.) 31.985 mm (1.2592 in.) 37.985 mm (1.4955 in.)
2nd gear inside diameter	New: MAX:	38.015 – 38.031 mm (1.4967 – 1.4973 in.) 38.031 mm (1.4973 in.)
1st gear inside diameter	New: MAX:	44.015 – 44.031 mm (1.7329 – 1.7335 in.) 44.031 mm (1.7335 in.)
1st gear thrust washer thickness	New: Min:	5.975 – 6.025 mm (0.2352 – 0.2372 in.) 5.975 mm (0.2352 in.)
Synchronizer ring set No.2 back and 2nd gear spline end clearance		0.7 – 1.3 mm (0.0276 – 0.0512 in.)
Synchronizer ring set No.1 back and 2nd gear spline end clearance		0.75 – 1.65 mm (0.0295 – 0.065 in.)
Reverse gear glove and reverse gear shift fork claw clearance		0.15 – 0.35 mm (0.0059 – 0.0138 in.)
Transmission clutch hub No.1 snap ring clearance		0.1 mm (0.004 in.) or less
Transmission clutch hub No.1 snap ring thickness	A: B: C: D: E: F:	2.50 mm (0.0984 in.) 2.56 mm (0.1008 in.) 2.62 mm (0.1031 in.) 2.68 mm (0.1055 in.) 2.74 mm (0.1079 in.) 2.80 mm (0.1102 in.)
DIFFERENTIAL CASE ASSY (MTM)		
Front differential side gear backlash		0.05 – 0.20 mm (0.0020 – 0.0079 in.)
Front differential pinion thrust washer thickness		0.92 mm (0.0362 in.)
Front differential pinion shaft No.1 outer diameter		16.982 mm (0.6686 in.)

Front differential side gear thrust washer	0.95 mm (0.0374 in.) 1.00 mm (0.0394 in.) 1.05 mm (0.0413 in.) 1.10 mm (0.0433 in.) 1.15 mm (0.0453 in.) 1.20 mm (0.0472 in.)
SHIFT & SELECT LEVER SHAFT ASSY (C59)	
Control shaft cover oil seal drive in depth	0.7 ± 0.5 mm (0.0276 ± 0.0197 in.)
Select inner lever slotted pin drive in depth	3.0 – 4.0 mm (0.1181 – 0.1575 in.)
Shift lever inner No.1 slotted pin drive in depth	0 ± 0.5 mm (0 ± 0.0197 in.)
Shift lever inner No.2 slotted pin drive in depth	0 ± 0.5 mm (0 ± 0.0197 in.)
SHIFT & SELECT LEVER SHAFT ASSY (C60)	
Control shaft cover oil seal drive in depth	0.7 ± 0.5 mm (0.0276 ± 0.0197 in.)
Shift lever inner No.1 slotted pin drive in depth	0 ± 0.5 mm (0 ± 0.0197 in.)
Shift lever inner No.2 slotted pin drive in depth	3.5 ± 0.5 mm (0.1378 ± 0.0197 in.)

030RG–01

TORQUE SPECIFICATION

Part Tightened		N·m	kgf·cm	ft·lbf
Floor shift transmission control cable assy x Body		5.0	51	44 in.·lbf
Front floor heat insulator No.1 x Body		5.5	56	49 in.·lbf
Airbag sensor assy center x Body		17.5	178	13
Shift cable grommet retainer No.1 x Body		5.0	51	44 in.·lbf
Clamp x Body		5.0	51	44 in.·lbf
Floor shift shift lever assy x Body		12	120	9
Filler and drain plugs		39.2	400	29
Engine hanger set bolt		38	387	28
Engine mounting bracket RR x Transaxle		64	653	47
Engine mounting bracket RR x Engine mounting insulator RR		87	888	64
Engine mounting bracket FR x Transaxle		64	653	47
Engine mounting bracket FR x Engine mounting insulator FR		52	530	38
Manual transaxle assy x Engine	Bolt A: Bolt B: Bolt C:	64 47 23	650 480 230	47 35 17
Transverse engine engine mounting bracket LH x Transaxle		52	530	38
Engine mounting bracket LH x Engine mounting insulator LH	Bolt A: Nut B:	52 80	530 816	38 59
Starter assy x Manual transaxle assy		37	378	27
Starter wire set nut		9.8	100	87 in.·lbf
Clutch release cylinder assy x Transaxle	Bolt A: Bolt B: Bolt C:	25 12 5.0	250 120 51	19 9 44 in.·lbf
Manual transaxle assy x Wire harness clmap	Bolt A: Bolt B:	25.5 12.8	260 131	19 9
Manual transaxle assy x Ground cable		13	133	10
Battery carrier x Body		13	133	10
Battery clamp sub–assy x Body	Bolt: Nut:	5.0 3.5	51 36	44 in.·lbf 31 in.·lbf
Air cleaner assy x Body		7.0	71	62 in.·lbf
Cylinder head cover No.2 x Engine		7.0	71	62 in.·lbf
Hood set bolt		13	133	10
Front differential case x Front differential ring gear		77.4	789	57
Selecting bell crank x Selecting bell crank No.2		11.8	120	9
MANUAL TRANSAXLE ASSY (C59)				
Bearing lock plate x transaxle case		11.3	115	8
Oil receiver pipe No.1 x Manual transmission case		17.2	175	13
Oil receiver pipe No.2 x Manual transmission case		17.2	175	13
Reverse restrict pin plug x Manual transmission case		12.7	130	9
Manual transaxle case receiver x Transaxle case		11.3	115	8
Gear shift fork No.1 x Gear shift fork shaft No.1		15.7	160	12
Gear shift head No.1 x Gear shift fork shaft No.2		15.7	160	12
Gear shift fork No.2 x Gear shift fork shaft No.2		15.7	160	12
Reverse shift arm bracket assy x Transaxle case		17.2	175	13
Trasaxle case x Manual transmission case		29.4	300	22
Manual transmission case x Transaxle case		29.4	300	22
Reverse idler gear shaft bolt x Manual transmission case		29.4	300	22
Lock ball assy No.1 x Manual transaxle assy		39.2	400	29
Shift detent ball plug Manual transmission case		24.5	250	18
Shift detent ball plug x Transaxle case		24.5	250	18
Bearing retainer rear x Manual transmission case		27.4	279	20

Part Tightened	N·m	kgf·cm	ft·lbf
Gear shift fork No.3 x Gear shift fork shaft No.3	15.7	160	12
Manual transmission output shaft rear set nut x Output shaft	117.6	1,200	87
Manual transmission case cover sub–assy x Manual transmission case	18.1	185	14
Shift & select lever shaft assy x Manual transmission case	19.6	200	14
Lock ball assy No.1 x Manual transmission case	29.4	300	22
Selecting bell crank assy x Manual transmission case	24.5	250	18
Floor shift control lever housing support bracket x Transaxle case	11.3	115	8
Back up lamp switch assy x Manual transmission case	40.2	411	30
Speedometer driver hole cover sub–assy x Manual transaxle assy	11.3	115	8
Speedometer sensor x Manual transaxle assy	11.3	115	8
Release fork support x Transaxle case	36.8	375	27
Drain plug sub–assy x Manual transmission case	39.2	400	29
Manual transmission filler plug x Manual transmission case	39.2	400	29
MANUAL TRANSAXLE ASSY (C60)			
Bearing lock plate x transaxle case	11.3	115	8
Manual transaxle case receiver x Transaxle case	11.3	115	8
Reverse shift arm bracket assy x Transaxle case	17.2	175	13
Gear shift head No.1 x Gear shift fork shaft No.2	15.7	160	12
Gear shift fork No.2 x Gear shift fork shaft No.2	15.7	160	12
Gear shift fork No.1 x Gear shift fork shaft No.1	15.7	160	12
Oil receiver pipe No.2 x Manual transmission case	17.2	175	13
Oil receiver pipe No.1 x Manual transmission case	17.2	175	13
Trasaxle case x Manual transmission case	29.4	300	22
Manual transmission case x Transaxle case	29.4	300	22
Reverse idler gear shaft bolt x Manual transmission case	29.4	300	22
Manual transmission case plug x Manual transaxle assy	39.2	400	29
Shift detent ball plug Manual transmission case	24.5	250	18
Back up lamp switch assy x Manual transmission case	40.2	411	30
Shift & select lever shaft assy x Manual transmission case	19.6	200	14
Lock ball assy No.1 x Manual transmission case	29.4	300	22
Bearing retainer rear x Manual transmission case	27.4	279	20
Gear shift fork No.3 x Gear shift fork shaft No.3	15.7	160	12
Manual transmission case cover sub–assy x Manual transmission case	18.1	185	13
Drain plug sub–assy x Manual transmission case	39.2	400	29
Manual transmission filler plug x Manual transmission case	39.2	400	29
Selecting bell crank assy x Manual transmission case	24.5	250	18
Floor shift control lever housing support bracket x Transaxle case	11.3	115	8
Speedometer driver hole cover sub–assy x Manual transaxle assy	11.3	115	8
Release fork support x Transaxle case	36.8	375	27

FRONT SUSPENSION

030RA–01

SERVICE DATA

Cold tire inflation pressure	2WD: P205/55R16 89H P215/50ZR17	Front, Rear	220 kPa (2.2 kgf/cm^2, 32 psi)
	4WD: P205/55R16 89H	Front Rear	240 kPa (2.4 kgf/cm^2, 35 psi) 220 kPa (2.2 kgf/cm^2, 32 psi)
Front wheel alignmwnt	Vehicle height 2WD Models 4WD Models	Front: A *1 – B *2 Rear: D *5 – C *3 Front: A *1 – B *2 Rear: D *5 – C *4	89 mm (3.50 in.) 41 mm (1.61 in.) 83 mm (3.27 in.) 38 mm (1.50 in.)
	Toe–in (total) Rack end length difference		0° ± 12' (0° ± 0.2°), 0 ± 2 mm, (0 ± 0.08 in.) 1.5 mm (0.059 in.) or less
	Wheel angle 2WD: 4WD: 	Inside wheel Reference: Outside wheel Inside wheel Reference: Outside wheel	36˚40' ± 2° (36˚67' ± 2°) 31˚53' (31.88°) 37˚03' ± 2° (37˚05' ± 2°) 32˚02' (32.03°)
	Camber 	2WD: 4WD: Left–right error	–0˚34' ± 45' (–0.57˚ ± 0.75˚) –0˚29' ± 45' (–0.48˚ ± 0.75˚) 45' (0.75˚) or less
	Caster 	2WD: 4WD: Left–right error	2˚47' ± 45' (2.78˚ ± 0.75˚) 2˚46' ± 45' (2.77˚ ± 0.75˚) 45' (0.75˚) or less
	Steering axis inclination 	2WD: 4WD: Left–Right error	12˚28' ± 45' (12.47˚ ± 0.75˚) 12˚13' ± 45' (12.22˚ ± 0.75˚) 45' (0.75˚) or less
Front suspension	Lower ball joint turning torque		0.98 – 4.9 N·m (10 – 50 kgf·cm, 8.7 – 43 in.·lbf)
	Stabilizer bar link ball joint turning torque		0.05 – 1.96 N·m (0.5 – 20 kgf·cm, 0.4 – 1.7 in.·lbf)

***1: Ground clearance of front wheel center**
***2: Ground clearance of lower suspension arm front bolt center**
***3: Ground clearance of rear axle beam set bolt center**
***4: Ground clearance of rear suspention lower arm rear bolt center**
***5: Ground clearance of rear wheel center**

030RB–01

TORQUE SPECIFICATION

Part Tightened		N·m	kgf·cm	ft·lbf
Tie rod end lock nut		74	755	55
Steering knuckle x Shock absorber		220	2,243	162
Hub nut		103	1,050	76
Suspension support x Piston rod		47	479	35
Suspension support x Body		39	398	29
ABS speed sensor wire harness bracket set bolt		29	296	21
Suspension cross member x Body	Bolt A:	157	1,601	116
	Bolt B:	113	1,152	83
Suspension cross member x Transverse engine engine mounting insulator		52	530	38
Rack & pinion power steering gear assy set bolt	2WD:	58	591	43
	4WD:	127	1295	94
Steering knuckle x Lower ball joint		103	1,050	76
Stabilizer bracket No.1 x Suspension cross member		19	194	14
Stabilizer bar link set nut		74	755	55
Lower suspension arm x Lower ball joint		89	908	66
Lower suspension arm x Suspension cross member		137	1,397	101

TIRE & WHEEL

SERVICE DATA

030R8–01

Tire runout	3.0 mm (0.118 in.) or less
Imbalance after adjustment	8.0 g (0.018 lb) or less

SEAT BELT

TORQUE SPECIFICATION

030RH–01

Part Tightened	N·m	kgf·cm	ft·lbf
FRONT SEAT BELT			
Front seat outer belt assy RH (Upper part of retractor) x Body	4.9	50	43 in.·lbf
Front seat outer belt assy RH (Lower part of retractor) x Body	41.2	420	30
Front seat inner belt assy x Front seat	41.2	420	30
Front shoulder belt anchor adjuster assy x Body	41.2	420	30
Front seat outer belt floor anchor x Body	41.2	420	30
Front seat outer belt shoulder anchor x Body	41.2	420	30
REAR SEAT BELT			
Luggage compartment tray x Body	18.1	185	13.3
Child restraint seat anchor bracket sub–assy RH x Body	18.1	185	13.3
Rear seat belt assy outer center x Body	41.2	420	30
Rear seat belt assy inner x Body	41.2	420	30
Rear seat inner w/ center belt assy x Body	41.2	420	30
Rear seat 3 point type belt assy outer (Upper part of retractor) x Body	4.9	50	43 in.·lbf
Rear seat 3 point type belt assy outer (Lower part of retractor) x Body	41.2	420	30
Rear seat 3 point type belt assy outer (Floor anchor side) x Body	41.2	420	30

POWER STEERING

030RK–01

SERVICE DATA

POWER STEERING FLUID		
Fluid level rise	Maximum	5 mm (0.20 in.)
Fluid pressure at idle speed with valve closed		7,300 – 7,800 kPa (75 – 80 kgf/cm^2, 1,067 – 1,138 psi)
STEERING WHEEL		
Steering effort at idle speed	(Reference)	6 N·m (60 kgf·cm, 53 in.·lbf)
POWER STEERING VANE PUMP		
Vane pump rotating torque		0.27 N·m (2.8 kgf·cm, 2.4 in.·lbf) or less
Vane pump shaft and vane pump housing oil clearance	STD Maximum	0.021 – 0.043 mm (0.0008 – 0.0017 in.) 0.07 mm (0.0028 in.)
Vane plate height	Minimum	7.6 mm (0.299 in.)
Vane plate thickness	Minimum	1.405 mm (0.0553 in.)
Vane plate length	Minimum	11.993 mm (0.4722 in.)
Clearance between the rotor groove and plate	Maximum	0.03 mm (0.0012 in.)
Spring free length	Minimum	36.9 mm (1.453 in.)
POWER STEERING GEAR		
Steering rack runout	Maximum	0.1 mm (0.004 in.)
Total preload (Tie rod rotating torque)	(Turning)	0.49 – 3.43 N·m (5.0 – 35 kgf·cm, 4.34 – 30.38 in.·lbf)
Total preload (Control valve rotating torque)	(Turning)	1.0 – 1.8 N·m (10 – 18 kgf·cm, 8.6 – 15.7 in.·lbf)

030RL–01

TORQUE SPECIFICATION

Part tightened		N·m	kgf·cm	ft·lbf
POWER STEERING VANE PUMP				
Vane pump housing rear x Vane pump housing front		22	220	16
Pressure port union		69	700	51
Suction port union set bolt		12	122	9
Oil pressure switch		21	210	15
Vane pump assy x Vane pump bracket rear		37	380	27
Vane pump assy set bolt		37	380	27
Pressure feed tube assy x Vane pump assy		41 (44)	420 (450)	30 (33)
Pressure feed tube assy clamp set bolt		7.8	80	69 in.·lbf
POWER STEERING GEAR				
Engine hanger set bolt		38	390	28
Control valve housing set bolt		18	185	13
Self–locking nut		25	250	18
Rack housing cap		59	600	43
Rack guide spring cap lock nut		43 (59)	440 (600)	32 (43)
Power steering rack x Rack end		62 (83)	630 (850)	46 (61)
Tie rod assy lock nut		74	750	54
Turn pressure tube union nut		12 (13)	120 (130)	9 (9)
Rack & pinion power steering gear assy set bolt and nut	2WD 4WD	58 82	590 835	43 60
Pressure feed and return tubes x Control valve housing		23 (25)	235 (255)	17 (18)
Pressure feed tube clamp set bolt		7.8	80	69 in.·lbf
Stabilizer link assy set nut		74	755	55
Tie rod assy set nut		49	500	36
Intermediate shaft sub–assy x Control valve shaft		35	360	26
Front suspension crossmember sub–assy x Frame	Bolt A Bolt B	157 157	1,600 1,600	116 116
Center member x Frame		39	400	29
Center member x Engine mounting insulator FR		52	530	38
Crossmember x Engine mounting insulator RR		52	530	38
Front suspension arm sub–assy lower No.1 x Lower ball joint		89	910	66
Hub nut		103	1,050	76

( ): For use without SST

SEAT

TORQUE SPECIFICATION

030QS–01

Part Tightened	N·m	kgf·cm	ft·lbf
FRONT SEAT (DRIVER SIDE)			
Separate type front seat back assy x Front seat adjuster sub–assy LH	43	440	32
Seat belt inner x Separate type front seat cushion assy	41	420	31
Front seat x Body	47	480	35
FRONT SEAT (PASSENGER SIDE)			
Front seat back lock sub–assy x Separate type front seat back assy	43	440	32
Front seat back lock sub–assy x Separate type front seat cushion assy	43	440	32
Seat belt inner x Separate type front seat cushion assy	42	430	31
Front seat x Body	47	480	35
REAR SEAT ASSY			
Rear seat lap type belt center x Separate type rear seat back assy RH	41	420	31
Separate type rear seat back assy x Seat back hinge	18	185	13
Rear seat assy x Body	41	420	31

INSTRUMENT PANEL/METER

030R5–01

TORQUE SPECIFICATION

Part Tightened	N·m	kgf·cm	ft·lbf
Instrument panel Reinforcement × Air bag	20	204	15

TRANSFER ASSY

030RP–01

SERVICE DATA

Drive pinion preload (at starting) Drive pinion and ring gear Total		 0.32 – 0.57 N·m (3 – 6 kgf·cm, 2.8 – 5.0 in.·lbf) 0.53 – 0.94 N·m (5 – 10 kgf·cm, 4.7 – 8.3 in.·lbf)
Ring gear backlash		0.10 – 0.15 mm (0.0039 – 0.0059 in.)
Ring gear runout		0.06 mm (0.0024 in.)
Transfer ring gear mounting case runout		0.14 mm (0.0055 in.)
Driven pinion preload (at starting) New bearing Used bearing		 0.52 – 0.97 N·m (5 – 10 kgf·cm, 4.6 – 8.6 in.·lbf) 0.30 – 0.52 N·m (3 – 5 kgf·cm, 2.7 – 4.6 in.·lbf)
Thrust washer thickness (Backlash adjust)	Mark	
	50	2.05 mm (0.0807 in.)
	51	2.08 mm (0.0819 in.)
	52	2.11 mm (0.0831 in.)
	53	2.14 mm (0.0843 in.)
	54	2.17 mm (0.0854 in.)
	55	2.20 mm (0.0866 in.)
	56	2.23 mm (0.0878 in.)
	57	2.26 mm (0.0890 in.)
	58	2.29 mm (0.0902 in.)
	59	2.32 mm (0.0913 in.)
	60	2.35 mm (0.0925 in.)
	61	2.38 mm (0.0937 in.)
	62	2.41 mm (0.0949 in.)
	63	2.44 mm (0.0961 in.)
	64	2.47 mm (0.0973 in.)
	65	2.50 mm (0.0984 in.)
	66	2.53 mm (0.0996 in.)
	67	2.56 mm (0.1008 in.)
	68	2.59 mm (0.1020 in.)
	69	2.62 mm (0.1031 in.)
	70	2.65 mm (0.1043 in.)
	71	2.68 mm (0.1055 in.)
	72	2.71 mm (0.1067 in.)
	73	2.74 mm (0.1079 in.)
	74	2.77 mm (0.1091 in.)
	75	2.80 mm (0.1102 in.)
	76	2.83 mm (0.1114 in.)
	77	2.86 mm (0.1126 in.)
	78	2.89 mm (0.1138 in.)
	79	2.92 mm (0.1150 in.)
	80	2.95 mm (0.1161 in.)
	81	2.98 mm (0.1173 in.)
	82	3.01 mm (0.1185 in.)
	83	3.04 mm (0.1197 in.)
	84	3.07 mm (0.1209 in.)

Thrust washer thickness (Tooth adjust)	Mark	
	AA	2.10 mm (0.0827 in.)
	AC	2.12 mm (0.0835 in.)
	BB	2.14 mm (0.0843 in.)
	CA	2.16 mm (0.0850 in.)
	CC	2.18 mm (0.0858 in.)
	DB	2.20 mm (0.0866 in.)
	EA	2.22 mm (0.0874 in.)
	EC	2.24 mm (0.0882 in.)
	FB	2.26 mm (0.0890 in.)
	GA	2.28 mm (0.0898 in.)
	GC	2.30 mm (0.0906 in.)
	HB	2.32 mm (0.0913 in.)
	JA	2.34 mm (0.0921 in.)
	JC	2.26 mm (0.0929 in.)
	KB	2.38 mm (0.0937 in.)
	LA	2.40 mm (0.0945 in.)
	LC	2.42 mm (0.0953 in.)
	MB	2.44 mm (0.0961 in.)
	NA	2.46 mm (0.0969 in.)
	NC	2.48 mm (0.0976 in.)
	PB	2.50 mm (0.0984 in.)
	QA	2.52 mm (0.0992 in.)
	QC	2.54 mm (0.1000 in.)

Total preload New bearing Used bearing		 Driven pinion preload + 0.3 – 0.45 N·m (3 – 5 kgf·cm, 2.7 – 4.0 in.·lbf) Driven pinion preload + 0.19 – 0.33 N·m (2 – 3 kgf·cm, 1.7 – 2.9 in.·lbf)
Thrust washer thickness (Preload adjust)	Mark	
	A0	2.47 mm (0.0972 in.)
	A1	2.50 mm (0.0984 in.)
	A2	2.53 mm (0.0996 in.)
	A3	2.56 mm (0.1008 in.)
	A4	2.59 mm (0.1020 in.)
	A5	2.62 mm (0.1031 in.)
	A6	2.65 mm (0.1043 in.)
	A7	2.68 mm (0.1055 in.)
	A8	2.71 mm (0.1067 in.)
	A9	2.74 mm (0.1079 in.)
	B0	2.77 mm (0.1091 in.)
	B1	2.80 mm (0.1102 in.)
	B2	2.83 mm (0.1114 in.)
	B3	2.86 mm (0.1126 in.)
	B4	2.89 mm (0.1138 in.)
	B5	2.92 mm (0.1150 in.)
	B6	2.95 mm (0.1161 in.)
	B7	2.98 mm (0.1173 in.)
	B8	3.01 mm (0.1185 in.)
	B9	3.04 mm (0.1197 in.)
	C0	3.07 mm (0.1209 in.)
	C1	3.10 mm (0.1220 in.)
	C2	3.13 mm (0.1232 in.)
	C3	3.16 mm (0.1244 in.)
	C4	3.19 mm (0.1256 in.)
	C5	3.22 mm (0.1268 in.)
	C6	3.25 mm (0.1280 in.)
	C7	3.28 mm (0.1291 in.)
	C8	3.31 mm (0.1303 in.)
	C9	3.34 mm (0.1315 in.)
	D0	3.37 mm (0.1327 in.)
	D1	3.40 mm (0.1339 in.)
	D2	3.43 mm (0.1350 in.)
	D3	3.46 mm (0.1362 in.)
	D4	3.49 mm (0.1374 in.)
	D5	3.52 mm (0.1386 in.)
	D6	3.55 mm (0.1398 in.)
	D7	3.58 mm (0.1409 in.)
	D8	3.61 mm (0.1421 in.)
	D9	3.64 mm (0.1433 in.)
	E0	3.67 mm (0.1445 in.)
	E1	3.70 mm (0.1457 in.)
	E2	3.73 mm (0.1469 in.)
	E3	3.76 mm (0.1480 in.)
	E4	3.79 mm (0.1492 in.)
	E5	3.82 mm (0.1504 in.)

030RQ–01

TORQUE SPECIFICATION

Part Tightened	N·m	kgf·cm	ft·lbf
Driven pinion gear nut (w/ SST)	260 – 355	2,647 – 3,616	191 – 262
Ring gear x Transfer ring gear mounting case	77.5	790	57
Bearing cap set bolt	63.2	644	47
Transfer extension housing sub–assy x Transfer case	25.5	260	19
Transfer extension housing sub–assy x Transfer dynamic damper	25.5	260	19
Breather oil deflector set bolt	6.5	66	58 in.·lbf
Transfer case rear cover No.1 x Transfer case	18.8	200	14
Transfer drain plug x Transfer assy	49	500	36
Transfer case No.1 plug x Transfer assy	49	500	36
Transfer case No.2 plug x Transfer assy	49	500	36
Stud bolt x Transfer assy	39.2	400	29
Transfer assy set nut	68.8	700	51
Transfer assy x Transfer stiffener plate	34	347	25
Transfer assy x Engine mounting bracket	64	652	47

SLIDING ROOF/CONVERTIBLE

030RD–01

SERVICE DATA

Sliding roof	Difference in level between sliding roof weatherstrip and roof panel	
	Except corners of rear side	0 + 1.5 mm (0 ± 0.059 in.)
	Corner of rear side	–1.0 – 1.5 mm (–0.039 – 0.059 in.)

030RE–01

TORQUE SPECIFICATION

Part Tightened	N·m	kgf·cm	ft·lbf
Sliding roof glass assembly × Drive cable	4.0	41	35 in.·lbf
Sliding roof housing assembly × Body	5.0	51	44 in.·lbf
Sliding roof housing assembly × Sliding roof drive gear	5.4	55	47 in.·lbf

LUBRICATION

030PC–01

SERVICE DATA

1ZZ–FE:

Oil pressure	at idle speed	29 kPa (0.3 kgf·cm^2, 4.2 psi) or more
	at 3,000 r/min	294 – 539 kPa (3.0 – 5.5 kgf·cm^2, 43 – 78 psi) or more
Adhesive		Part No. 08833 – 00080, THREE BOND 1344, LOCTITE 242, or equivalent
Engine oil		
Capacity	Drain and refill w/ oil filter change	3.7 liters (3.9 US qts, 3.3 lmp. qts)
	Drain and refill w/o oil filter change	3.5 liters (3.7 US qts, 3.1 lmp. qts)
	Dry fill	4.2 liters (4.4 US qts, 3.7 lmp. qts)
Oil pump assy		
Tip clearance		0.040 – 0.160 mm (0.0016 – 0.0063 in.)
Body clearance		0.260 – 0.325 mm (0.0102 – 0.0128 in.)
Side clearance		0.025 – 0.071 mm (0.0010 – 0.0028 in.)

2ZZ–GE:

Oil pressure		
	at idle speed	19.2 kPa (0.2 kgf·cm^2, 2.8 psi) or more
	at 3,000 r/min	294 –539 kPa (3.0 – 5.5 kgf·cm^2, 43 – 78 psi) or more
Adhesive		Part No. 08833 – 00080, THREE BOND 1344, LOCTITE 242, or equivalent
Engine oil		
Capacity	Drain and refill w/ oil filter change	4.4 liters (4.7 US qts, 3.9 lmp. qts)
	Drain and refill w/o oil filter change	4.2 liters (4.4 US qts, 3.7 lmp. qts)
	Dry fill	4.8 liters (5.1 US qts, 4.2 lmp. qts)
Oil pump assy		
Tip clearance	Standard	0.060 – 0.180 mm (0.0024 – 0.0071 in.)
	Maximum	0.35 mm (0.0138 in.)
Body clearance	Standard	0.125 – 0.180 mm (0.0049 – 0.0071 in.)
	Maximum	0.325 mm (0.0128 in.)
Side clearance	Standard	0.030 – 0.080 mm (0.0012 – 0.0032 in.)
	Maximum	0.16 mm (0.0063 in.)

030PD–01

TORQUE SPECIFICATION

1ZZ–FE:

Part Tightened	N·m	kgf·cm	ft·lbf
Oil pressure switch x Cylinder head	13	130	9.0
Oil pan drain plug x Oil pan	37	377	27
Oil pump x Cylinder block	9.0	92	80 in.·lbf
Chain vibration damper No. 1 x Cylinder block	9.0	92	80 in.·lbf
Oil pan drain plug x Oil pan sub – assy	37	377	27
Oil pump relief valve plug x Oil pump body	37	377	27
Oil pump cover x Oil pump body	10	105	8.0

2ZZ–GE:

Part Tightened	N·m	kgf·cm	ft·lbf
Oil pressure switch x Cylinder head	13	130	9.0
Oil pan drain plug x Oil pan	37	377	27
Oil pump x Cylinder block	9.0	92	80 in.·lbf
OIl pan drain plug x Oil pan sub–assy	37	377	27
Oil pan relief valve plug x OIl pump body	49	500	36
Oil pump cover x Oil pump body	10	105	8.0

EMISSION CONTROL

030PI–02

SERVICE DATA

1ZZ–FE

Oxyzen sensor Resistance	HT – +B	11 – 16 Ω
VSV for Pressure switching valve Resistance	at 20°C (68°F)	37 – 44 Ω
Vacuum switching valve No.1 Resistance	at 20 °C (68 °F)	27 – 33 Ω
Vacuum switching valve assy No. 1 Resistance	at 20°C (68°F)	25 – 30 Ω

2ZZ–GE

Oxyzen sensor Resistance	HT – +B	11 – 16 Ω
VSV for Pressure switching valve Resistance	at 20°C (68°F)	37 – 44 Ω
Vacuum switching valve No.1 Resistance	at 20 °C (68 °F)	27 – 33 Ω
Vacuum switching valve assy No. 1 Resistance	at 20°C (68°F)	25 – 30 Ω

ENGINE CONTROL SYSTEM

030PG–01

SERVICE DATA

1ZZ–FE:

Throttle idle speed control valve assy Movement	Ignition switch ON	Half open → fully close → fully open → half open
Intake air flow meter sub–assy Resistance	THA – E2 at –20°C (–4°F) at 20°C (68°F) at 60°C (140°F)	 13.6 – 18.4 kΩ 2.21 – 2.69 kΩ 0.49 – 0.67 kΩ
Camshaft timing oil control valve assy Resistance	at 20°C (68°F)	6.9 – 7.9 Ω
E.F.I Throttle position sensor Resistance	VC – E2	2.5 – 6.0 kΩ
E.F.I. Engine coolant temperature sensor Resistance	at 20°C (68°F) at 80°C (176°F)	2.32 – 2.59 kΩ 0.310 – 0.326 kΩ
Knock control sensor Resistance	at 20°C (68°F)	120 – 280 kΩ
E.F.I. Circuit opening relay assy Specified condition	Between terminals 1 and 2 Between terminals 3 and 5	Continuity No continuity
E.F.I. ECU relay Specified condition	Between terminals 1 and 2 Between terminals 3 and 5	Continuity No continuity

2ZZ–GE:

Throttle idle speed control valve assy Movement	Ignition switch ON	Half open → fully close → fully open → half open
Intake air flow meter sub–assy Resistance	THA – E2 at –20°C (–4°F) at 20°C (68°F) at 60°C (140°F)	 13.6 – 18.4 kΩ 2.21 – 2.69 kΩ 0.49 – 0.67 kΩ
Camshaft timing oil control valve assy Resistance	at 20°C (68°F)	6.9 – 7.9 Ω
E.F.I Throttle position sensor Resistance	VC – E2	2.5 – 6.0 kΩ
E.F.I. Engine coolant temperature sensor Resistance	at 20°C (68°F) at 80°C (176°F)	2.32 – 2.59 kΩ 0.310 – 0.326 kΩ
Knock control sensor Resistance	at 20°C (68°F)	120 – 280 kΩ
E.F.I. Circuit opening relay assy Specified condition	Between terminals 1 and 2 Between terminals 3 and 5	Continuity No continuity
E.F.I. ECU relay Specified condition	Between terminals 1 and 2 Between terminals 3 and 5	Continuity No continuity

030PH–01

TORQUE SPECIFICATION

1ZZ–FE:

Part Tightened	N·m	kgf·cm	ft·lbf
Throttle body idle speed control valve assy x Throttle body assy	3.7	38	33 in.·lbf
E.F.I. Throttle position sensor x Throttle body assy	2.0	20	18 in.·lbf
Accelerator Control cable bracket sub–assy x Throttle body assy	13	133	9.6
Throttle body assy x Intake manifold	30	306	22
Throttle body bracket x Cylinder head sub–assy	30	306	22
Manifold stay No. 2 x Throttle body assy M/T	13	133	9.6
Cylinder head cover No. 2 x Cylinder head cover sub–assy	7.0	71	62 in.·lbf

2ZZ–GE:

Part Tightened	N·m	kgf·cm	ft·lbf
Throttle body idle speed control valve assy x Throttle body assy	3.7	38	33 in.·lbf
E.F.I. Throttle position sensor x Throttle body assy	2.0	20	18 in.·lbf
Throttle body assy x Intake manifold	22	224	16
Cylinder head cover No. 2 x Cylinder head cover sub–assy	7.0	71	62 in.·lbf

STARTING & CHARGING

030PL–02

SERVICE DATA

Starter assy		
Specified current		90 A or less at 11.5 V
Circle runout	Maximum	0.05 mm (0.0020 in.)
Commutator length	Standard	3.3 mm (0.1299 in.)
	Minimum	4.0 mm (0.1575 in.)
Brush holder length	Standard	9.0 mm (0.3543 in.)
	Minimum	4.0 mm (0.1575 in.)
Snap ring length	Maximum	5.0 mm (0.1969 in.)
Generator assy		
Rotor coil resistance	at 20°C (68°F)	2.1 – 2.5 Ω
Slip ring diameter	Standard	14.2 – 14.4 mm (0.559 – 0.567 in.)
	Minimum	12.8 mm (0.504 in.)
Brush exposed length	Standard	9.5 – 11.5 mm (0.374 – 0.453 in.)
	Minimum	1.5 mm (0.059 in.)
Battery		
Voltage	at 20°C (68°F)	12.5 – 12.9 V

030PM–02

TORQUE SPECIFICATION

Part Tightened		N·m	kgf·cm	ft·lbf
Lead wire of field frame x Magnetic switch		5.9	60	52 in.·lbf
Starter x Engine	Bolt	37	378	27
	Nut	9.8	100	7
Starter Assy				
Commutator end frame assy x Motor terminal starter kit		6.0	61	53 in.·lbf
Repair service starter kit x Motor terminal starter kit		7.5	77	66 in.·lbf
Lead wire x Terminal C of starter		6.5	66	58 in.·lbf
Generator assy x Engine	M12	25	250	18
	M14	54	550	39
Generator assy				
Rectifire end frame x Drive end frame (See page 19–17)				
	Nut A	4.5	46	39 in.·lbf
	Nut B	5.4	55	47 in.·lbf
Recrifire holder x Coil lead on rectifire end frame		2.9	30	26 in.·lbf
Voitage regulator x Rectifire end frame		2.0	20	18 in.·lbf
Brush holder x Rectifire end frame		2.0	20	18 in.·lbf
Rear end cover x Rectifire holder		4.4	45	39 in.·lbf
Plate terminal x Rectifire holder		3.9	39	35 in.·lbf
Terminal insulator x Rectifire holder		4.1	42	36 in.·lbf
Generator pulley x Rotor		111	1,125	81

AUTOMATIC TRANSMISSION / TRANSAXLE

0305K–09

SERVICE DATA

A246E		
Line pressure (Wheel locked)		
	Engine idling	
	D position	382 – 422 kPa (3.9 – 4.3 kgf/cm^2, 55 – 61 psi)
	R position	647 – 760 kPa (6.6 – 7.8 kgf/cm^2, 94 – 111 psi)
	At stall (Throttle valve fully opened)	
	D position	713 – 844 kPa (7.27 – 8.61 kgf/cm^2, 103 – 122 psi)
	R position	1,520 – 1,755 kPa (15.5 – 17.9 kgf/cm^2, 220 – 254 psi)
Engine stall revolution	D and R positions	2,550 ± 150 rpm
Time lag	N → D position	Less than 1.2 seconds
	N → R position	Less than 1.5 seconds
Engine idle speed (A/C OFF)	N position	650 ± 50 rpm
Drive plate runout	Max.	0.20 mm (0.0079 in.)
Differential oil seal drive in depth	LH side	5.3 ± 0.5 mm (0.209 ± 0.020 in.)
	RH side	2.0 ± 0.5 mm (0.079 ± 0.020 in.)
Shift schedule		
D position		
(Throttle valve fully opened)	1 → 2	55 – 64 km/h (34 – 40 mph)
	2 → 3	103 – 114 km/h (64 – 71 mph)
	3 → O/D	161 – 178 km/h (100 – 110 mph)
	O/D → 3	154 – 170 km/h (96 – 106 mph)
	3 → 2	96 – 105 km/h (60 – 65 mph)
	2 → 1	42 – 48 km/h (26 – 30 mph)
(Throttle valve fully closed)	3 → O/D	32 – 39 km/h (20 – 24 mph)
	O/D → 3	15 – 21 km/h (9 – 13 mph)
2 position		
(Throttle valve fully opened)	1 → 2	55 – 64 km/h (34 – 40 mph)
	3 → 2	97 – 107 km/h (60 – 66 mph)
	2 → 1	42 – 48 km/h (26– 30 mph)
L position		
(Throttle valve fully opened)	2 → 1	46 – 53 km/h (29 – 33 mph)
Lock–up point	Throttle valve opening 5 %	
3rd gear (O/D main switch OFF)	Lock–up ON	70 – 79 km/h (43 – 49 mph)
	Lock–up OFF	63 – 71 km/h (39– 44 mph)
O/D gear	Lock–up ON	57 – 65 km/h (35 – 40 mph)
	Lock–up OFF	51 – 58 km/h (32 – 36 mph)

U240E		
Line pressure (Wheel locked)		
	Engine idling	
	D position	373 – 412 kPa (3.8 – 4.2 kgf/cm^2, 54 – 60 psi)
	R position	673 – 742 kPa (6.9 – 7.6 kgf/cm^2, 98 – 108 psi)
	At stall (Throttle valve fully opened)	
	D position	931 – 1,031 kPa (9.5 – 10.5 kgf/cm^2, 135 – 150 psi)
	R position	1,768 – 1,968 kPa (18.0 – 20.0 kgf/cm^2, 256 – 285 psi)
Engine stall revolution	D and R positions	2,325 ± 150 rpm
Time lag	N → D position	Less than 1.2 seconds
	N → R position	Less than 1.5 seconds
Engine idle speed (A/C OFF)	N position	700 ± 50 rpm
Drive plate runout	Max.	0.20 mm (0.0079 in.)
Differential oil seal drive in depth	LH side	2.7 ± 0.5 mm (0.106 ± 0.020 in.)
	RH side	0 ± 0.5 mm (0 ± 0.020 in.)

Shift schedule		
D position		
(Throttle valve fully opened)	1 → 2	58 – 66 km/h (36 – 41 mph)
	2 → 3	108 – 122 km/h (67 – 76 mph)
	3 → O/D	172 – 189 km/h (107 – 117 mph)
	O/D → 3	166 – 182 km/h (103 – 113 mph)
	3 → 2	101 – 114 km/h (63 – 71 mph)
	2 → 1	43 – 49 km/h (27 – 30 mph)
(Throttle valve fully closed)	3 → O/D	38 – 45 km/h (24 – 28 mph)
	O/D → 3	14 – 19 km/h (9 – 12 mph)
2 position		
(Throttle valve fully opened)	1 → 2	58 – 66 km/h (36 – 41 mph)
	3 → 2	108 – 121 km/h (67 – 75 mph)
	2 → 1	43 – 49 km/h (27– 30 mph)
L position		
(Throttle valve fully opened)	3 → 2	108 – 121 km/h (67 – 75 mph)
	2 → 1	50 – 57 km/h (31 – 35 mph)
Lock–up point	Throttle valve opening 5 %	
O/D gear	Lock–up ON	72 – 81 km/h (45 – 50 mph)
	Lock–up OFF	62 – 70 km/h (39 – 43 mph)

U341F		
Line pressure (Wheel locked)		
	Engine idling	
	D position	372 – 412 kPa (3.8 – 4.2 kgf/cm^2, 54 – 60 psi)
	R position	553 – 623 kPa (5.6 – 6.4 kgf/cm^2, 80 – 100 psi)
	At stall (Throttle valve fully opened)	
	D position	1,126 – 1,226 kPa (11.5 – 12.5 kgf/cm^2, 164 – 178 psi)
	R position	1,764 – 1,964 kPa (18.0 – 20.0 kgf/cm^2, 256 – 284 psi)
Engine stall revolution	D and R positions	2,550 ± 150 rpm
Time lag	N → D position	Less than 1.2 seconds
	N → R position	Less than 1.5 seconds
Engine idle speed		
(A/C OFF)	N position	650 ± 50 rpm
Drive plate runout	Max.	0.20 mm (0.0079 in.)
Differential oil seal drive in depth	LH side	2.7 ± 0.5 mm (0.106 ± 0.020 in.)
	RH side (Front transaxle case oil seal)	4.0 ± 0.5 mm (0.157 ± 0.020 in.)
	RH side (Front differential case oil seal)	0 ± 0.5 mm (0 ± 0.020 in.)
Shift schedule		
D position		
(Throttle valve fully opened)	1 → 2	52 – 59 km/h (32 – 37 mph)
	2 → 3	100 – 110 km/h (62 – 68 mph)
	3 → O/D	161 – 173 km/h (100 – 108 mph)
	O/D → 3	154 – 165 km/h (96 – 103 mph)
	3 → 2	94 – 104 km/h (58 – 65 mph)
	2 → 1	43 – 48 km/h (27 – 30 mph)
(Throttle valve fully closed)	3 → O/D	42 – 47 km/h (26 – 29 mph)
	O/D → 3	31 – 36 km/h (19 – 22 mph)
2 position		
(Throttle valve fully opened)	1 → 2	52 – 59 km/h (32 – 37 mph)
	3 → 2	96 – 105 km/h (60 – 65 mph)
	2 → 1	43 – 48 km/h (27– 30 mph)
L position		
(Throttle valve fully opened)	3 → 2	96 – 105 km/h (60 – 65 mph)
	2 → 1	48 – 53 km/h (30 – 33 mph)

0305L–09

TORQUE SPECIFICATION

A246E				
Part Tightened		N·m	kgf·cm	ft·lbf
Park/neutral position switch x Transaxle	Bolt	5.5	56	49 in.·lbf
	Nut	5.5	56	49 in.·lbf
Control shaft lever x Park/neutral position switch		12.5	127	9
Battery carrier x Body		13	132	10
Engine hanger x Engine		38	387	28
Drain plug x Oil pan		17.5	178	13
Transaxle x Engine	Bolt A:	64	650	47
	Bolt B:	46	470	34
	Bolt C:	23	235	17
Torque converter clutch x Drive plate		28	285	20
Engine mounting bracket RR x Transaxle		64	652	47
Engine mounting bracket FR x Transaxle		64	652	47
Center member x Body	Bolt A:	39	398	29
	Bolt B:	52	530	38
Engine mounting insulator RR x Engine mounting bracket RR		87	887	64
Engine mounting insulator RR x Suspension member		52	530	38
Engine mounting bracket LH x Transaxle		52	530	38
Engine mounting insulator LH x Body	Bolt A:	52	530	38
Engine mounting insulator LH x Engine mounting bracket LH	Nut B:	80	815	59
Engine mounting insulator FR x Engine mounting bracket FR		52	530	38
Starter x Transaxle		39	400	29
Starter wire x Starter		13	132	10
Transmission case protector x Transaxle		18	182	14
Oil filler tube x Transaxle		5.5	56	49 in.·lbf
Oil cooler tube clamp x Oil filler tube		5.5	56	49 in.·lbf
Oil cooler outlet tube x Transaxle		34.5	350	25
Oil cooler inlet tube x Transaxle		34.5	350	25
Wire harness clamp bracket x Transaxle		12.75	130	9
Wire harness x Transaxle	Bolt A:	25.5	260	19
	Bolt B:	10	102	7
	Bolt C:	13	132	10
Control cable bracket x Transaxle		12	122	9
Control cable support x Transaxle		12	122	9
Air cleaner assy x Body		7.0	71	62 in.·lbf
Cylinder head cover No. 2 x Engine		7.0	71	62 in.·lbf
Speedometer sensor x Transaxle		11.3	115	9
Solenoid valve x Valve body	Bolt A:	11	110	8
	Bolt B:	11	110	8
	Bolt C:	6.5	66	58 in.·lbf
Valve body x Transaxle		10	100	7
Manual detent spring x Valve body		10	100	7
Oil strainer x Valve body		10	100	7
Oil pan x Transaxle		5.3	55	48 in.·lbf
Transmission wire x Transaxle		5.4	55	48
Floor shift assy x Body		11.8	122	9
Control cable x Control shaft lever		12	122	9
Control cable x Body	Bolt	5.0	50	43 in.·lbf
	Nut	12	122	9

U240E				
Part Tightened		N·m	kgf·cm	ft·lbf
Park/neutral position switch x Transaxle	Bolt	5.4	55	48 in.·lbf
	Nut	6.9	70	61 in.·lbf
Control shaft lever x Park/neutral position switch		12.7	130	9
Battery carrier x Body		13	132	10
Engine hanger x Engine		38	387	28
Drain plug x Oil pan		49	500	36
Transaxle x Engine	Bolt A:	64	650	47
	Bolt B:	46	470	34
	Bolt C:	23	235	17
Torque converter clutch x Drive plate		41	418	30
Engine mounting bracket RR x Transaxle		64	652	47
Engine mounting bracket FR x Transaxle		64	652	47
Center member x Body	Bolt A:	39	398	29
	Bolt B:	52	530	38
Engine mounting insulator RR x Engine mounting bracket RR		87	887	64
Engine mounting insulator RR x Suspension member		52	530	38
Engine mounting bracket LH x Transaxle		52	530	38
Engine mounting insulator LH x Body	Bolt A:	52	530	38
Engine mounting insulator LH x Engine mounting bracket LH	Nut B:	80	815	59
Engine mounting insulator FR x Engine mounting bracket FR		52	530	38
Starter x Transaxle		39	400	29
Starter wire x Starter		13	132	10
Oil filler tube x Transaxle		5.5	56	49 in.·lbf
Oil cooler tube clamp x Oil filler tube		5.5	56	49 in.·lbf
Oil cooler outlet tube x Transaxle		34.5	350	25
Oil cooler inlet tube x Transaxle		34.5	350	25
Wire harness x Transaxle	Bolt A:	13	132	10
Wire harness clamp bracket x Transaxle	Bolt B:	5.4	55	48 in.·lbf
Control cable bracket x Transaxle		12	122	9
Control cable support x Transaxle		12	122	9
Air cleaner assy x Body		7.0	71	62 in.·lbf
Cylinder head cover No. 2 x Engine		7.0	71	62 in.·lbf
Transmission revolution sensor x Transaxle		11.3	115	9
Solenoid valve x Valve body	Bolt A:	6.6	67	58 in.·lbf
	Bolt B:	10.8	110	8
Valve body x Transaxle		10.8	110	8
Oil strainer x Valve body		10.8	110	8
ATF temperature sensor x Transaxle		6.6	67	58 in.·lbf
Oil pan x Transaxle		7.8	80	69 in.·lbf
Transmission wire x Transaxle		5.4	55	48
Floor shift assy x Body		11.8	122	9
Control cable x Control shaft lever		12	122	9
Control cable x Body	Bolt	5.0	50	43 in.·lbf
	Nut	12	122	9

U341F				
Part Tightened		N·m	kgf·cm	ft·lbf
Park/neutral position switch x Transaxle	Bolt Nut	5.4 6.9	55 70	48 in.·lbf 61 in.·lbf
Control shaft lever x Park/neutral position switch		12.7	130	9
Battery carrier x Body		13	132	10
Transaxle x Engine	Bolt A: Bolt B: Bolt C:	64 46 23	650 470 235	47 34 17
Torque converter clutch x Drive plate		28	285	20
Engine mounting bracket FR x Transaxle		64	652	47
Engine mounting bracket LH x Transaxle		52	530	38
Oil filler tube x Transaxle	Bolt A:	11.5	117	8
Oil cooler tube clamp x Oil filler tube	Bolt B:	5.5	56	49 in.·lbf
Oil cooler outlet tube x Transaxle		34.5	350	25
Oil cooler inlet tube x Transaxle		34.5	350	25
Wire harness clamp bracket x Transaxle		5.4	55	48 in.·lbf
Wire harness x Transaxle	Bolt A: Bolt B:	10 26	102 265	7 19
Control cable bracket x Transaxle		12	122	9
Control cable support x Transaxle		12	122	9
Transmission case protector x Transaxle		23	235	17
Transmission revolution sensor x Transaxle		5.4	55	48 in.·lbf
Air cleaner assy x Body		7.0	71	62 in.·lbf
Drain plug x Oil pan		49	500	36
Solenoid valve x Valve body		10.8	110	8
Valve body x Transaxle		10.8	110	8
ATF temperature sensor x Valve body		10.8	110	8
Oil strainer x Valve body		10.8	110	8
Oil pan x Transaxle		7.8	80	69 in.·lbf
Transmission wire x Transaxle		5.4	55	48
Floor shift assembly x Body		11.8	122	9
Control cable x Control shaft lever		12	122	9
Control cable x Body	Bolt Nut	5.0 12	50 122	43 in.·lbf 9

CLUTCH

030EF–03

SERVICE DATA

Pedal height from asphalt sheet	w/o Trun over w/ Trun over	135.8 – 145.8 mm (5.346 – 5.740 in.) 131.6 – 141.6 mm (5.182 – 5.575 in.)
Clutch pedal free play		5.0 – 15.0 mm (0.197 – 0591 in.)
Clutch pedal push rod play at pedal top		1.0 – 5.0 mm (0.039 – 0.197 in.)
Slotted spring pin protrusion	Maximum	1.5 – 3.5 mm (0.059 – 0.138 in.)
Disc rivet head depth	Maximum	0.3 mm (0.012 in.)
Disc runout	Minimum	0.8 mm (0.031 in.)
Diaphragm spring finger wear	Maximum depth: Maximum width:	0.5 mm (0.020 in.) 6.0 mm (0.236 in.)
Flywheel sub–assy runout	Maximum	0.1 mm (0.004 in.)
Diaphragm spring finger wear	Maximum depth	0.5 mm (0.020 in.)
Clutch release point from pedal full stroke end position		25 mm (0.98 in.) or more

030EG–02

TORQUE SPECIFICATION

Part Tightened	N·m	kgf·cm	ft·lbf
Clutch pedal sub–assy x Clutch pedal support	36.8	375	27
Clutch pedal support set bolt x Body	19.1	195	14
Cylinder push rod clevis lock nut	24.5	245	18
Clutch master cylinder assy x Clutch pedal support	11.8	120	9
Clutch master cylinder assy x Flexible hose tube	15.2	155	11
Release cylinder bleeder plug	8.4	85	74 in.·lbf
Clutch release cylinder assy x Transaxle housing	11.8	120	9
Clutch release cylinder assy x Flexible hose tube	15.2	155	11
Flexible hose tube bracket x Flexible hose tube	5.0	51	44 in.·lbf
Clutch cover assy x Flywheel sub–assy	19.1	195	14
Release fork support x Transaxle assy	36.8	375	27
Clutch start switch assy set nut	15.68	160	12

ECM POWER SOURCE CIRCUIT

CIRCUIT DESCRIPTION

When the ignition switch is turned ON, battery positive voltage is applied to the coil which closes the contacts of the E.F.I. relay (Marking: E.F.I.) and supplies power to the terminal +B of the ECM.

WIRING DIAGRAM

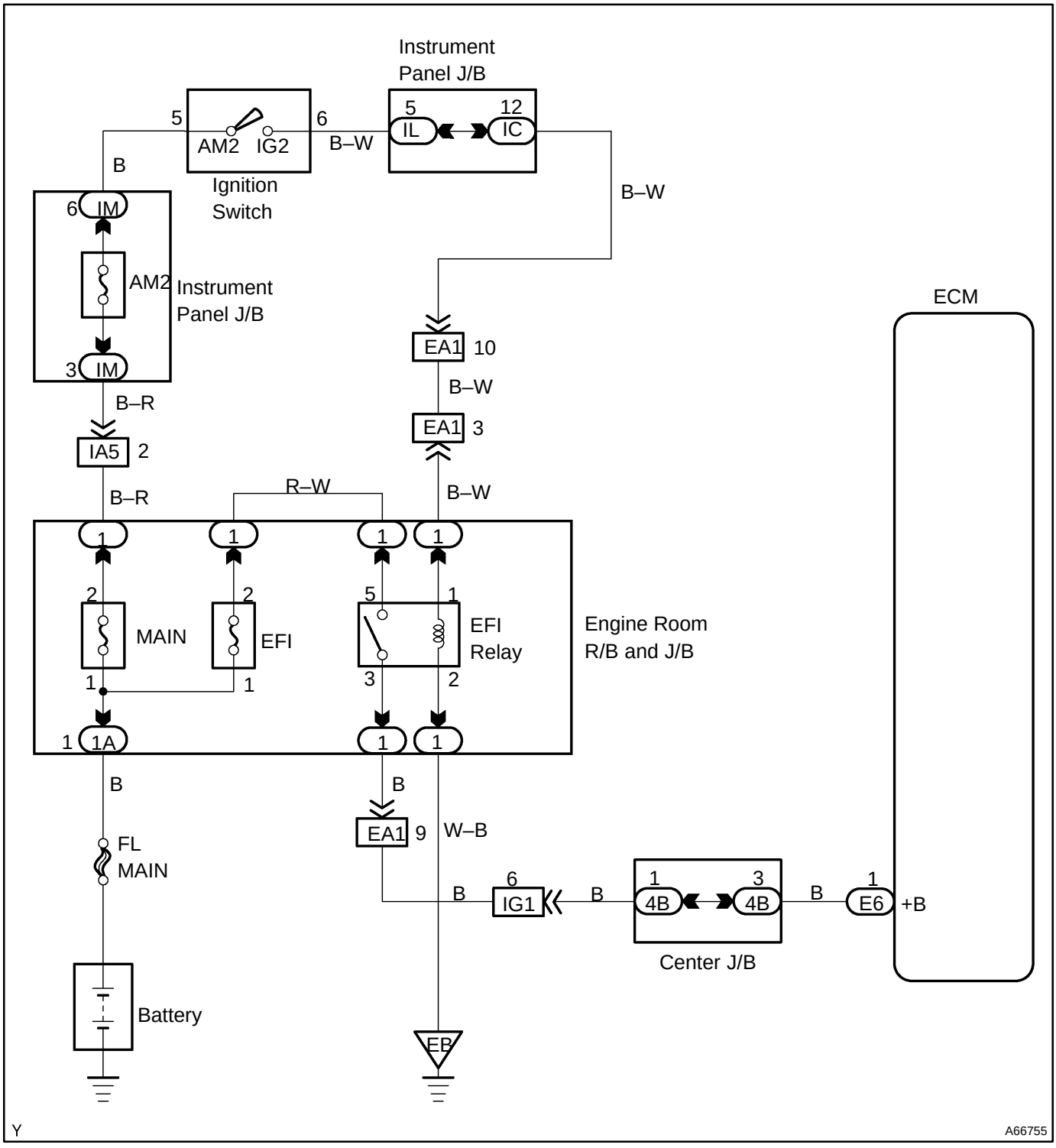

INSPECTION PROCEDURE

1 INSPECT ECM

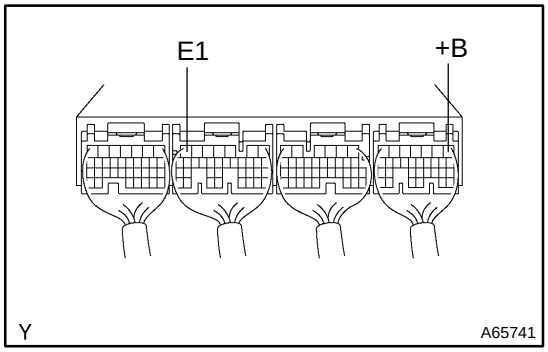

(a) Turn the ignition switch ON.
(b) Measure voltage between the terminals +B of the ECM connector and E1 of the ECM connector.
Voltage: 9 – 14 V

OK → **CHECK AND REPLACE ECM**

NG

2 CHECK HARNESS AND CONNECTOR(ECM GROUND)

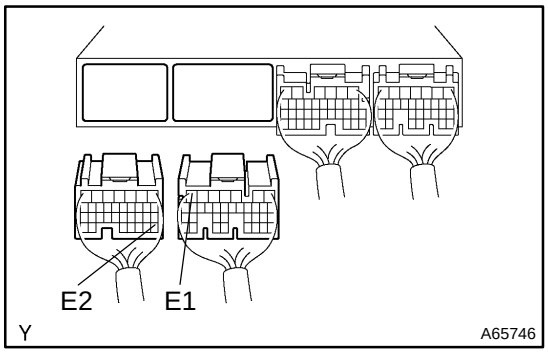

(a) Disconnect the battery negative (–) terminal.
(b) Disconnect the ECM E3 and E4 connector.
(c) Check continuity between the terminal E1 of the ECM connector and body ground.
Resistance: 1 Ω or less
(d) Check continuity between the terminal E2 of the ECM connector and body ground.
Resistance: 1 Ω or less

NG → **REPAIR OR REPLACE HARNESS AND CONNECTOR**

OK

3 CHECK RELAY(E.F.I. RELAY)

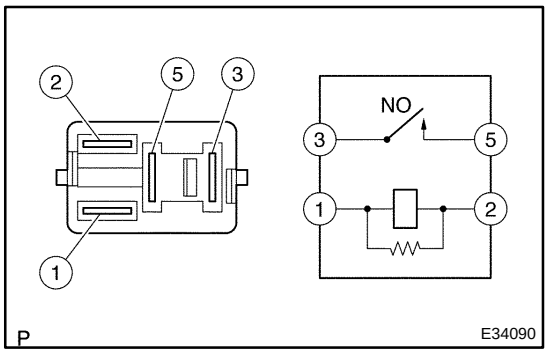

(a) Remove the E.F.I. relay.
(b) Check continuity between the terminals shown below.
Resistance:

TERMINAL NO.	RESISTANCE
1 – 2	1 Ω or less
3 – 5	1 MΩ or more

(c) Check continuity between the terminals 3 and 5 of the connector when the battery voltage is applied to the terminals between 1 and 2.
Resistance:

TERMINAL NO.	RESISTANCE
3 – 5	1 Ω or less

NG → **REPLACE RELAY**

OK

4	CHECK FUSE(E.F.I. FUSE)

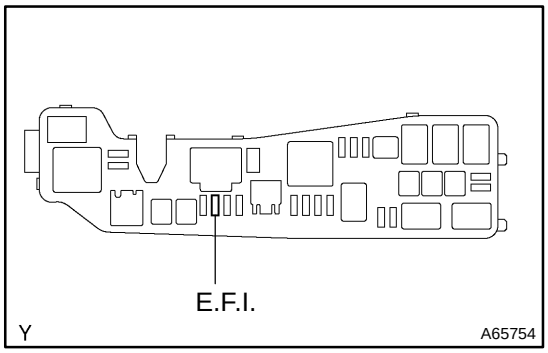

(a) Remove the E.F.I. fuse.
(b) Check continuity of E.F.I. fuse.
Resistance: 1 Ω or less

NG → **REPLACE FUSE**

OK

5	CHECK RELAY OPERATION(E.F.I. RELAY)

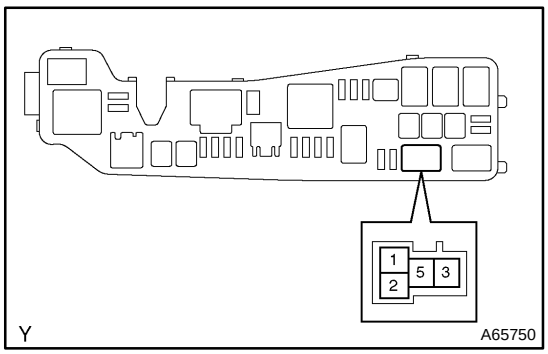

(a) Remove the E.F.I. relay.
(b) Confirm that the E.F.I. relay operates normally when turning the ignition switch ON.
Result:
E.F.I. relay operation sound is heard successively when turning the ignition switch ON.

NG → **Go to step 9**

OK

6 CHECK HARNESS AND CONNECTOR(ECM–E.F.I.RELAY)

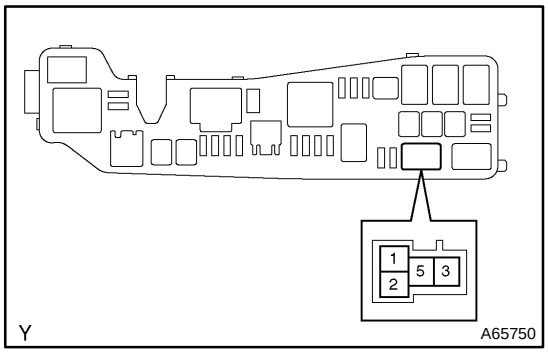

(a) Disconnect the battery negative (–) terminal.
(b) Remove the E.F.I. relay.
(c) Check continuity between the terminals 1 of the E.F.I. relay in the engine room R/B and +B of the ECM connector.
Resistance: 1 Ω or less
(d) Check short between the terminals 1 of the E.F.I. relay in the engine room R/B and E2 of the ECM.
Resistance: 1 MΩ or more

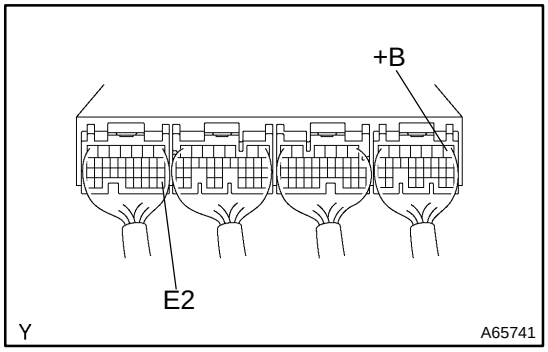

NG → **REPAIR OR REPLACE HARNESS AND CONNECTOR**

OK

7 CHECK HARNESS AND CONNECTOR(E.F.I. FUSE–BATTERY)

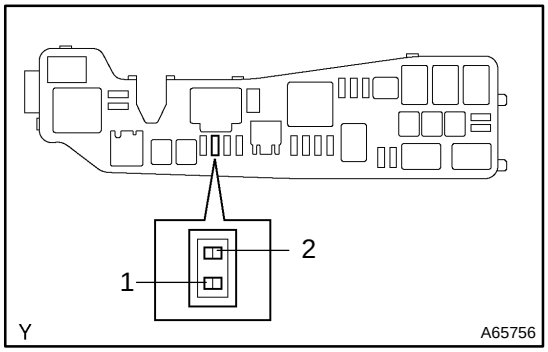

(a) Disconnect the battery negative (–) connector.
(b) Remove the E.F.I. fuse.
(c) Check continuity between the terminals 1 of the E.F.I. fuse holder in the engine room R/B and negative (–) of the battery.

NOTICE:
Do not insert the tester leads hard in the procedure (c), or the holder may be damaged.

NG → **REPAIR OR REPLACE HARNESS AND CONNECTOR**

OK

REPLACE ECM

8 INSPECT IGNITION OR STARTER SWITCH ASSY

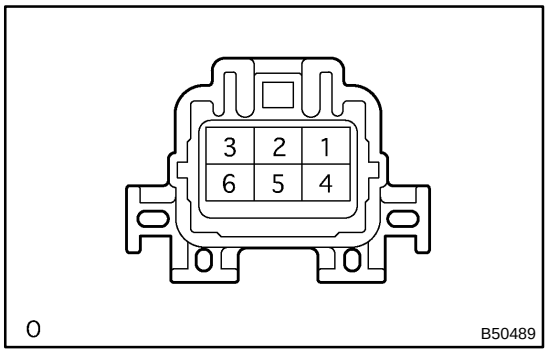

(a) Check continuity between the connector terminals shown in the chart below.

Switch	Terminal No.	Resisitance
LOCK	All Terminals	1MΩ or more
ACC	1–3	1Ω or less
ON	1–2–3 5–6	1Ω or less
START	4–5–6 1–2	1Ω or less

NG → **REPLACE IGNITION OR STARTER SWITCH ASSY**

OK

9 CHECK HARNESS AND CONNECTOR(IGNITION SWITCH–E.F.I. CIRCUIT OPENING RELAY)

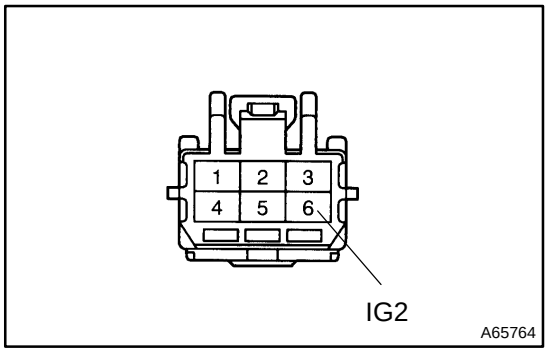

(a) Disconnect the battery negative (–) terminal.
(b) Remove the E.F.I. circuit opening relay.
(c) Disconnect the ignition switch connector.
(d) Check continuity between the terminals IG2 of the ignition switch connector and 5 of the E.F.I. circuit opening relay in the R/B.
Resistance: 1 Ω or less
(e) Check for short between the terminal IG2 of the ignition switch and body ground.
Resistance: 1 MΩ or more

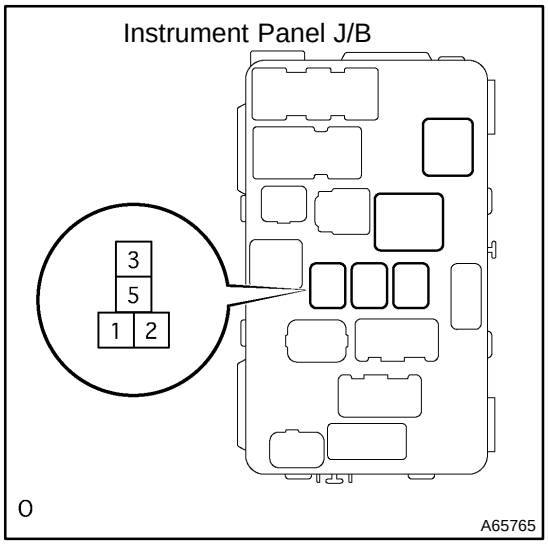

NG → **REPAIR OR REPLACE HARNESS AND CONNECTOR**

OK

REPLACE ECM

FUEL PUMP CONTROL CIRCUIT

CIRCUIT DESCRIPTION

In the diagram below, when the engine is cranked, current flows from terminal ST of the ignition switch to the starter relay coil and also current flows to terminal STA of ECM (STA signal).
When the STA signal and NE signal are input to the ECM, Tr is turned ON, current flows to the coil of the circuit opening relay, the relay switches on, power is supplied to the fuel pump and the fuel pump operates. While the NE signal is generated (engine running), the ECM keeps Tr ON (circuit opening relay ON) and the fuel pump also keeps operating.

WIRING DIAGRAM

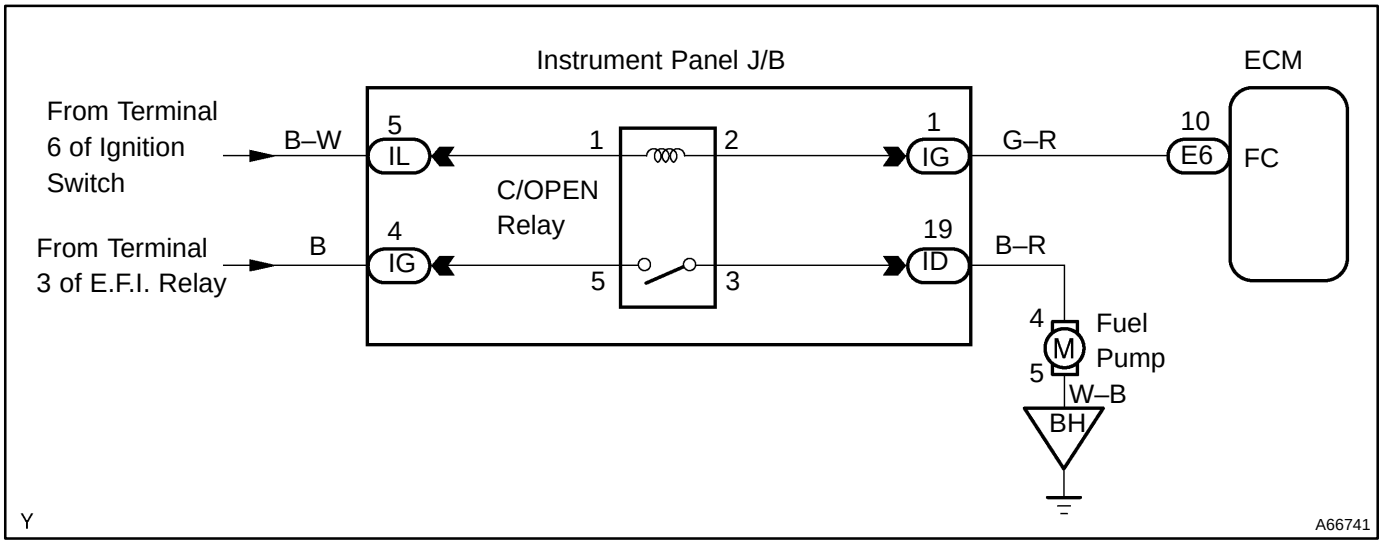

INSPECTION PROCEDURE

Hand–held tester:

1	PERFORM ACTIVE TEST BY HAND–HELD TESTER(OPERATION OF CIRCUIT OPENING RELAY)

(a) Connect the hand–held tester to the DLC3.
(b) Turn the ignition switch ON and push the hand–held tester main SW ON.
(c) Select the item ”FUEL PUMP / SPD” in the ACTIVE TEST.
(d) Turn the ignition switch ON, and perform the active test at the engine stop.
Result: The circuit opening relay operates.

OK → **PROCEED TO NEXT CIRCUIT INSPECTION SHOWN ON PROBLEM SYMPTOMS TABLE**

NG

2	CHECK FOR ECM POWER SOURCE CIRCUIT (See page 05–148)

NG → REPAIR OR REPLACE

OK

3	INSPECT E.F.I. CIRCUIT OPENING RELAY ASSY (See page 10–2)

NG → REPLACE E.F.I. CIRCUIT OPENING RELAY ASSY

OK

4	INSPECT ECM(CHECK VOLTAGE)

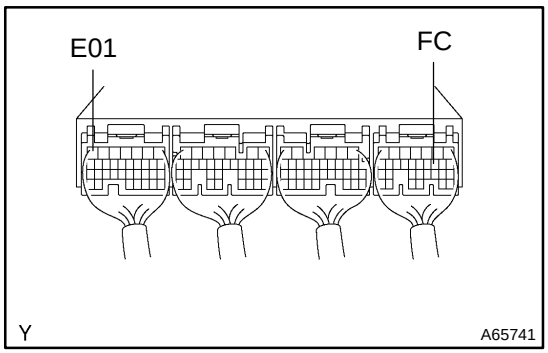

(a) Turn the ignition switch ON.
(b) Measure the voltage between terminal FC and E01 of the ECM connector.
Voltage: 9 – 14 V

OK → Go to step 6

NG

5	CHECK WIRE HARNESS OR CONNECTOR(E.F.I. RELAY–E.F.I. CIRCUIT OPENING RELAY, E.F.I. CIRCUIT OPNING RELAY) (See page 01–34)

NG → REPAIR OR REPLACE WIRE HARNESS OR CONNECTOR

OK

CHECK AND REPLACE ECM

6	INSPECT FUEL PUMP (See page 11–7)

NG → REPLACE FUEL PUMP

OK

7	CHECK WIRE HARNESS OR CONNECTOR(CHECK FOR OPEN)

(a) Check for open in harness and connector between E.F.I. circuit opening relay and fuel pump, and fuel pump and body ground.
Result: Continuity

NG → **REPAIR OR REPLACE WIRE HARNESS OR CONNECTOR**

OK

CHECK AND REPLACE ECM

OBD II scan tool (excluding hand–held tester):

1	CHECK OPERATION OF FUEL PUMP

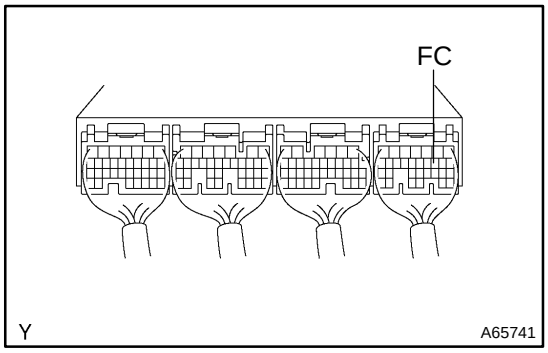

(a) Turn the ignition switch ON.
(b) Connect between terminal FC of the ECM E6 connector and the body ground.
(c) Check for fuel pressure in the fuel inlet hose when it is pinched off.
Result: There is pressure in fuel inlet hose.

HINT:
At this time, you will hear the fuel return flowing noise.

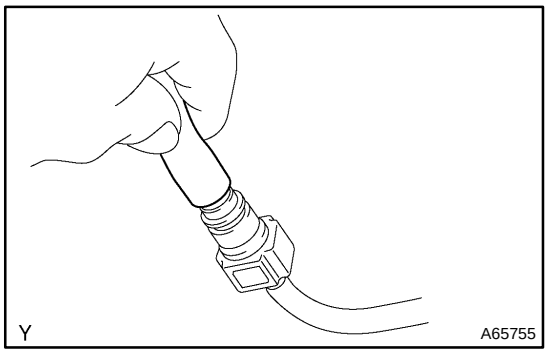

OK → **PROCEED TO NEXT CIRCUIT INSPECTION SHOWN ON PROBLEM SYMPTOMS TABLE**

NG

2	CHECK FOR ECM POWER SOURCE CIRCUIT (See page 05–148)

NG → **REPAIR OR REPLACE**

OK

3	INSPECT E.F.I. CIRCUIT OPENING RELAY ASSY (See page 10–2)

NG → REPLACE E.F.I. CIRCUIT OPENING RELAY ASSY

OK

4	INSPECT ECM(CHECK VOLTAGE)

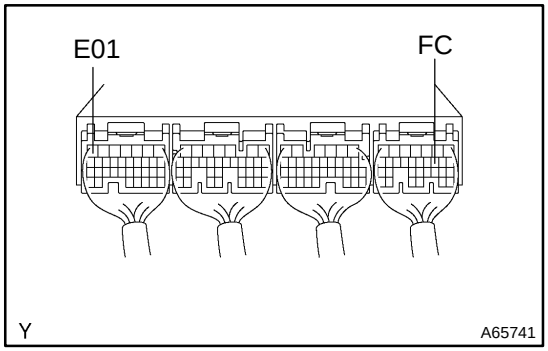

(a) Turn the ignition switch ON.
(b) Measure the voltage between terminal FC of the ECM connector and E01 of the ECM connector.
Voltage: 9 – 14 V

OK → Go to step 6

NG

5	CHECK WIRE HARNESS OR CONNECTOR(E.F.I. RELAY–E.F.I. CIRCUIT OPENING RELAY, E.F.I. CIRCUIT OPENING RELAY)

OK → REPAIR OR REPLACE WIRE HARNESS OR CONNECTOR

NG

CHECK AND REPLACE ECM

6	INSPECT FUEL PUMP (See page 11–7)

NG → REPLACE FUEL PUMP

OK

7	CHECK WIRE HARNESS OR CONNECTOR(OPEN BETWEEN TERMINAL 3 OF E.F.I. CIRCUIT OENING RELAY AND TERMINAL)

NG → REPAIR OR REPLACE WIRE HARNESS OR CONNECTOR

OK

CHECK AND REPLACE ECM

DTC	P1300	IGNITER CIRCUIT MALFUNCTION (NO.1)

DTC	P1305	IGNITER CIRCUIT MALFUNCTION (NO.2)

DTC	P1310	IGNITER CIRCUIT MALFUNCTION (NO.3)

DTC	P1315	IGNITER CIRCUIT MALFUNCTION (NO.4)

CIRCUIT DESCRIPTION

A Direct Ignition System (DIS) has been adopted. The DIS improves the ignition timing accuracy, reduces the high–voltage loss, and enhances overall reliability of the ignition system by eliminating the distributor. The DIS is a 1–cylinder ignition system which ignites one cylinder with one ignition coil. In the 1–cylinder ignition system, the spark plug is connected to the end of the secondary winding. High voltage generated in the secondary winding is applied directly to the spark plug. The spark of the spark plug passes through from the center electrode to the ground electrode.

The ECM determines ignition timing and outputs the ignition signals (IGT) of each cylinder. Based on IGT signals, the power transistors cut off the current to the primary coil in the ignition coil. At the same time, the igniter also sends an ignition confirmation signal (IGF) as a fail–safe measurement to the ECM.

DTC No.	DTC Detecting Condition	Trouble Area
P1300 P1305 P1310 P1315	No IGF signal to ECM while engine is running	• Ignition system • Open or short in IGF and IGT circuit from ignition coil with igniter • ignition coil with igniter • ECM

WIRING DIAGRAM

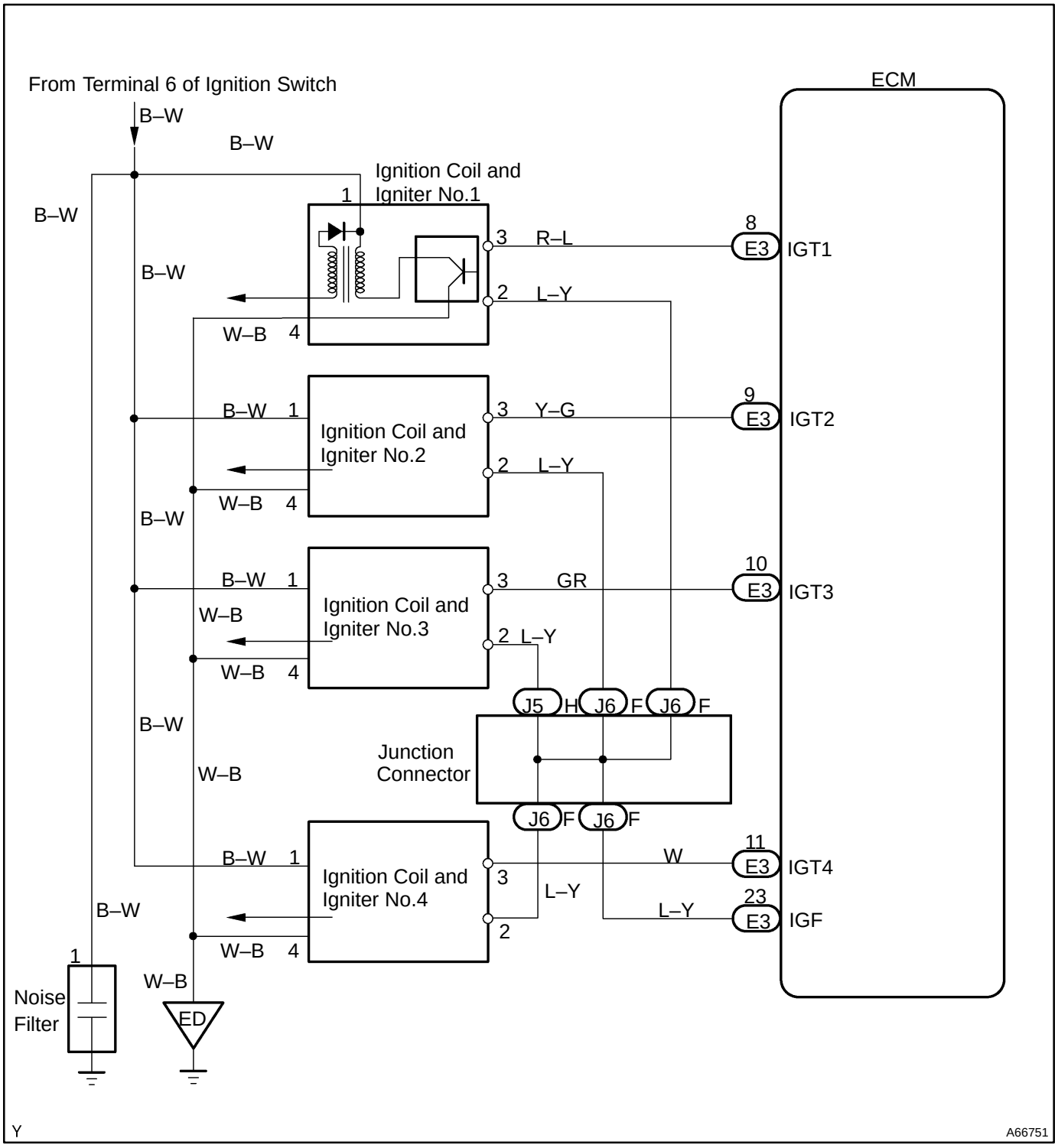

INSPECTION PROCEDURE

HINT:

- If DTC P1300 is displayed, check No.1 ignition coil with igniter circuit.
- If DTC P1305 is displayed, check No.2 ignition coil with igniter circuit.
- If DTC P1310 is displayed, check No.3 ignition coil with igniter circuit.
- If DTC P1315 is displayed, check No.4 ignition coil with igniter circuit.
- Read freeze frame data using hand–held tester or OBD II scan tool. Because freeze frame records the engine conditions when the malfunction is detected, when troubleshooting it is useful for determining whether the vehicle was running or stopped, the engine warmed up or not, the air–fuel ratio lean or rich, etc. at the time of the malfunction

1	CHECK SPARK PLUG AND SPARK (See page 18–1)

NG → Go to step 4

OK

2	CHECK HARNESS AND CONNECTOR(ECM–IGNITION COIL)

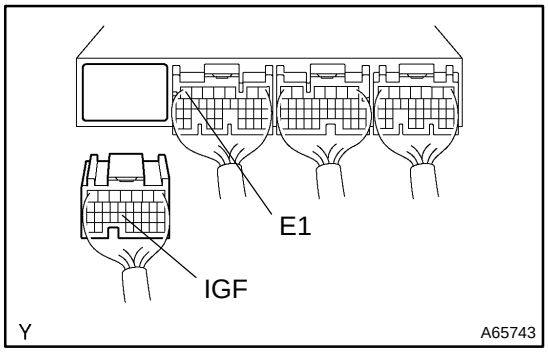

HINT:

The procedure below is for NO.1 cylinder. If a malfunction is found on the other cylinders, check the circuit for the cylinder with referring to this procedure.

(a) Disconnect the ignition coil connector.

(b) Disconnect the ECM E3 connector.

(c) Check for open between the terminals IGF of the ECM connector and IGF of the ignition coil connector.
Resistance: 1 Ω or less

(d) Check for short between the terminals IGF of the ECM connector and E1 of the ECM connector.
Resistance: 1 MΩ or less.

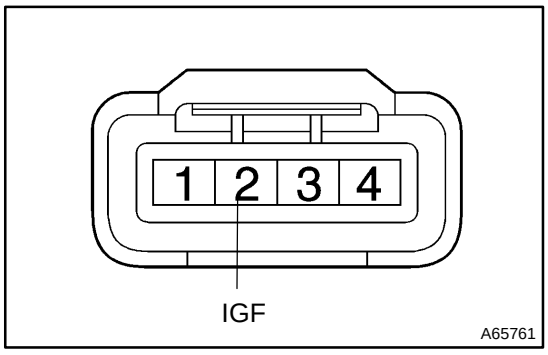

NG → REPAIR OR REPLACE HARNESS AND CONNECTOR

OK

3	INSPECT ECM(CHECK VOLTAGE)

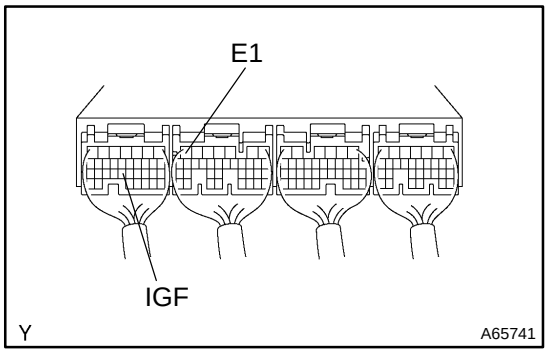

(a) Disconnect the ignition coil connector.
(b) Turn the ignition switch ON.
(c) Measure voltage between the terminals IGF of the ECM connector and E1 ECM connector.
Voltage: 4.5 – 5.5 V

OK → **REPLACE IGNITION COIL ASSY**

NG

CHECK AND REPLACE ECM

4	CHECK HARNESS AND CONNECTOR(ECM–IGNITION COIL)

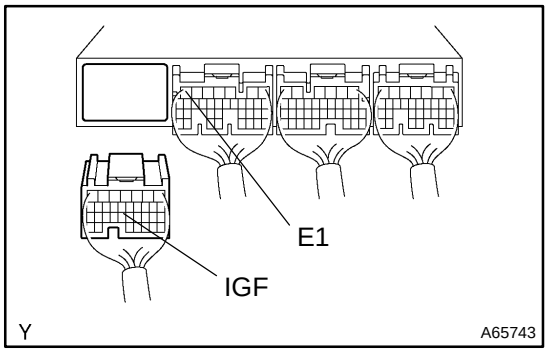

HINT:
The procedure below is for NO.1 cylinder. If a malfunction is found on the other cylinders, check the circuit for the cylinder with referring to this procedure.
(a) Disconnect the ignition coil connector.
(b) Disconnect the ECM E3 connector.
(c) Check for open between the terminals IGT1 of the ECM connector and IGT of the ignition coil connector.
Resistance: 1 Ω or less
(d) Check for short between the terminals IGT1 of the ECM connector and E1 of the ECM connector.
Resistance: 1 MΩ or more.

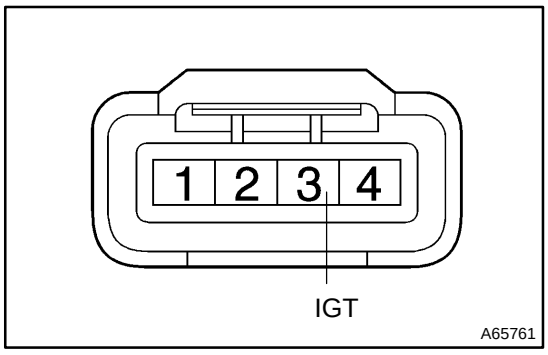

NG → **REPAIR OR REPLACE HARNESS AND CONNECTOR**

OK

5 INSPECT ECM(CHECK VOLTAGE)

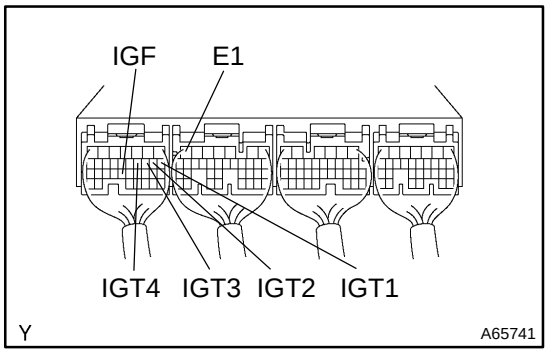

(a) Turn the ignition switch ON.
(b) Measure the voltage between terminals IGT1 – IGT4 of the ECM connector and E1 of the ECM connector when the engine is cranked.
Voltage: More than 0.1 V and less than 4.5 V

HINT:
During cranking or idling, check the waveform between terminals IGT1 – IGT4 and E1 of the ECM connector.

Item	Contents
Terminal	CH1: IGT1, IGT2, IGT3, IGT4 – E1 CH2: IGF – E1
Equipment Set	2V/DIV, 20ms/DIV
Condition	While the engine is cranking or idling

HINT:
Correct waveform appears as shown, with rectangle waves.

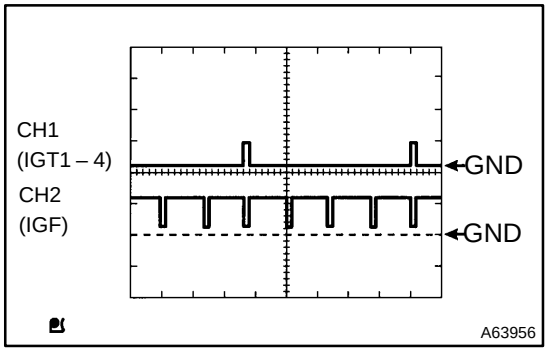

NG → **CHECK AND REPLACE ECM**

OK

6 INSPECT ECM(CHECK VOLTAGE)

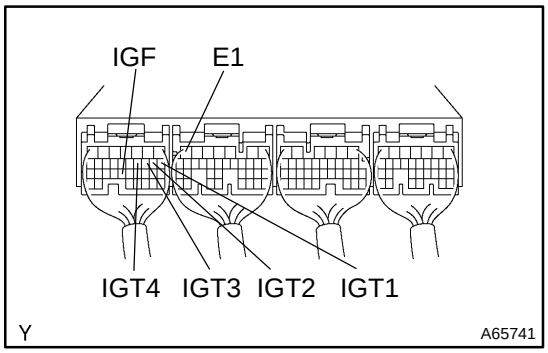

(a) Disconnect the ignition coil with the igniter connector.
(b) Turn the ignition switch ON.
(c) Measure the voltage between terminals IGT1 – IGT4 of the ECM connector and E1 of the ECM connector when the engine is cranked.
Voltage: More than 0.1 V and less than 4.5 V

NG → **CHECK AND REPLACE ECM**

OK

7	CHECK IGNITION COIL ASSY(POWER SOURCE)

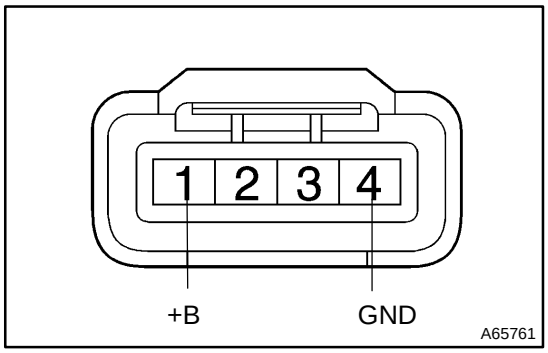

(a) Disconnect the ignition coil with the igniter connector.
(b) Turn the ignition switch ON.
(c) Measure voltage between terminals +B and GND of the ignition coil with the igniter connector.
Voltage: 9 – 14 V

OK → **REPAIR OR REPLACE POWER SOURCE**

NG

8	CHECK HARNESS AND CONNECTOR(IGNITION SWITCH–IGNITION COIL)

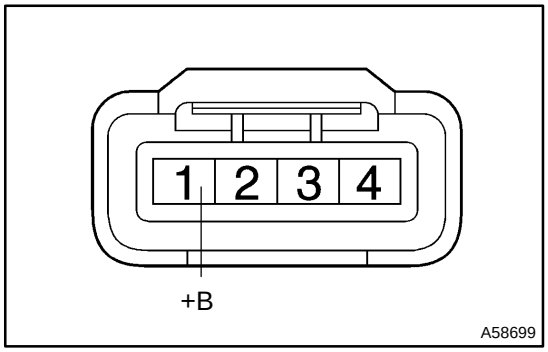

(a) Disconnect the ignition coil with igniter connector.
(b) Disconnect the ignition switch connector.
(c) Check for open between the terminals +B of the ignition coil with igniter connector and IG2 of the ignition switch.
Resistance: 1 Ω or less

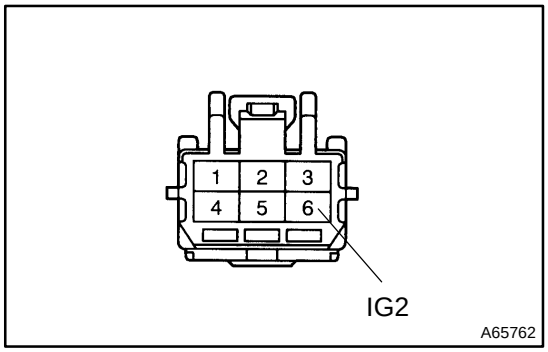

NG → **REPAIR OR REPLACE HARNESS AND CONNECTOR**

OK

REPLACE IGNITION COIL ASSY

DTC	P1335	CRANKSHAFT POSITION SENSOR CIRCUIT MALFUNCTION (DURING ENGINE RUNNING)

CIRCUIT DESCRIPTION

Refer to DTC P0335 on page 05–76.

DTC No.	DTC Detecting Condition	Trouble Area
P1335	If conditions (a) through (c) are met: (a) NE ≧ 1,000 rpm (b) NE signal is not detected for over 50 msec. (c) Not during cranking	• Open or short in crankshaft position sensor circuit • Crankshaft position sensor • Crank angle sensor plate • ECM

WIRING DIAGRAM

Refer to DTC P0335 on page 05–76.

INSPECTION PROCEDURE

Refer to DTC P0335 on page 05–76.

DTC	P1346	VVT SENSOR/CAMSHAFT POSITION SENSOR CIRCUIT RANGE/PERFORMANCE PLOBLEM (BANK 1)

CIRCUIT DESCRIPTION

Refer to DTC P0335 on page 05–76.

DTC No.	Detection Item	Trouble Area
P1346	Deviation in crankshaft position sensor signal and VVT sensor signal (2 trip detection logic)	• Mechanical system malfunction (Skipping teeth of timing chain, chain stretched) • ECM

WIRING DIAGRAM

Refer to DTC P0335 on page 05–76.

INSPECTION PROCEDURE

HINT:

Read freeze frame data using the hand–held tester or OBD II scan tool, as freeze frame data records the engine conditions when the malfunction is detected. When troubleshooting, it is useful for determining whether the vehicle was running or stopped, the engine was warmed up or not, the air–fuel ratio was lean or rich, etc. at the time of the malfunction.

1	CHECK VALVE TIMING (See page 14–100)

NG → ADJUST VALVE TIMING

OK ↓

CHECK AND REPLACE ECM

DTC P1349 VVT SYSTEM MALFUNCTION (BANK 1)

CIRCUIT DESCRIPTION

VVT system controls the intake valve timing to proper timing in response to driving condition.
ECM controls OCV (Oil Control Valve) to make the intake valve timing properly, and, oil pressure controlled with OCV is supplied to the VVT controller, and then, VVT controller changes relative position between the camshaft and the crankshaft.

DTC No.	DTC Detecting Condition	Trouble Area
1349	Condition (a) or (b) continues for after the engine is warmed up and engine speed at 400 – 4,000 rpm: (a) Valve timing does not change from of current valve timing (b) Current valve timing is fixed	• Valve timing • Oil control valve • VVT controller assembly • ECM

WIRING DIAGRAM

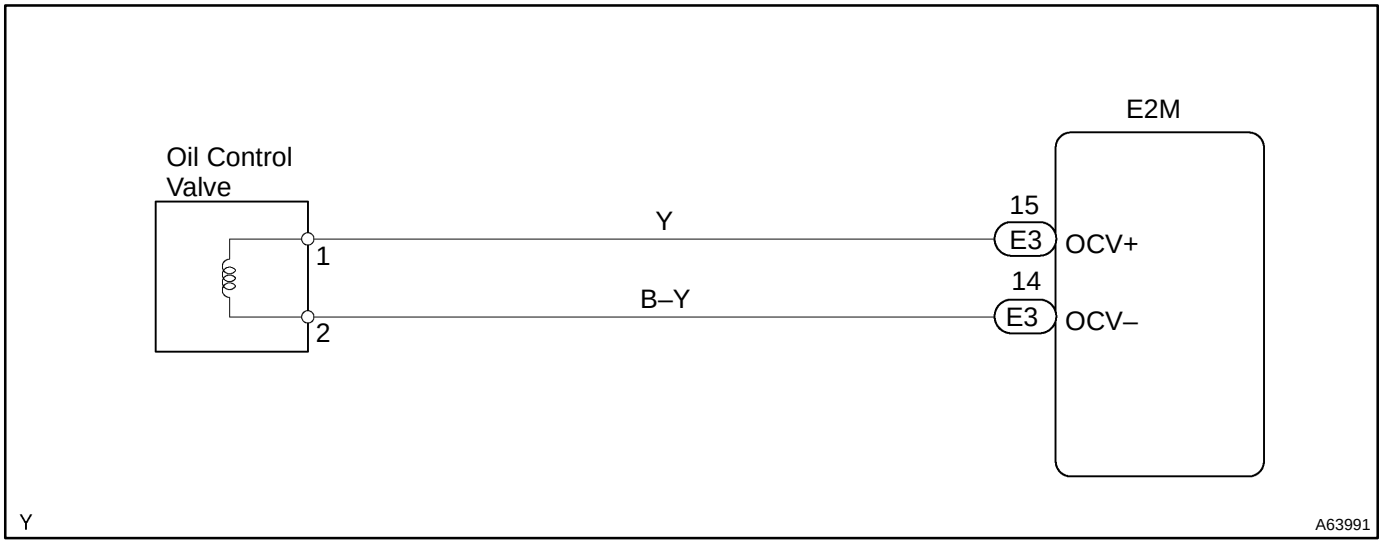

INSPECTION PROCEDURE

HINT:

- If DTC P1349 is displayed, check VVT system circuit.
- Read freeze frame data using the hand–held tester or OBD II scan tool, as freeze frame data records the engine conditions when the malfunction is detected. When troubleshooting, it is useful for determining whether the vehicle was running or stopped, the engine was warmed up or not, the air–fuel ratio was lean or rich, etc. at the time of the malfunction.

Hand–held tester:

1	CHECK VALVE TIMING (See page 14–100)

NG → ADJUST VALVE TIMING

OK

2	PERFORM ACTIVE TEST BY HAND–HELD TESTER(OPERATION OF OCV)

(a) Start the engine and warm it up.
(b) Connect the hand–held tester and select VVT on the ACTIVE TEST menu.
(c) Check the engine speed when operating the OCV by the hand–held tester.
OCV is OFF: Normal engine speed
OCV is ON: Rough idle or engine stall

HINT:
*: DTC P1349 is also output when a foreign object is detected in some parts of the system in the engine oil, and then the system returns to normal in a short time. As ECM is controlled to eject a foreign object, there is no problem on the VVT. There is also no problem on the VVT as the oil filter should catch the foreign object in the engine oil.

OK → **VVT SYSTEM OK**

NG

3	INSPECT ECM(CHECK VOLTAGE)

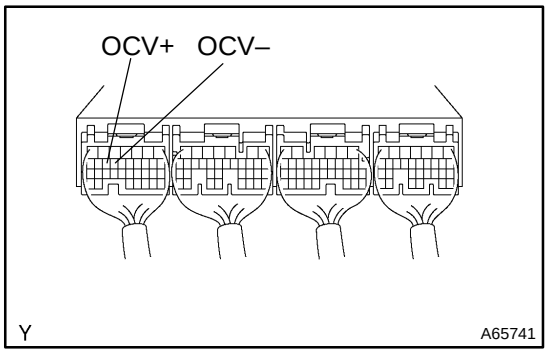

(a) Turn the ignition switch ON.
(b) Check the waveform between terminals OCV+ and OCV– of the ECM connector.

HINT:
- The correct waveform is as shown in the left.
- The waveform frequency (A) becomes longer as the engine speed becomes higher.

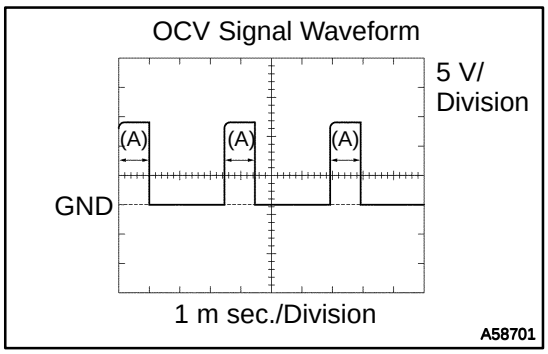

NG → **CHECK AND REPLACE ECM**

OK

4	INSPECT CAMSHAFT TIMING GEAR ASSY (See page 14–100)

NG → **REPLACE VVT CONTROLLER ASSEMBLY, AND THEN GO TO NEXT STEP**

OK

5	INSPECT CAMSHAFT TIMING OIL CONTROL VALVE ASSY (See page 10–2)

NG → REPLACE CAMSHAFT TIMING OIL CONTROL VALVE ASSEMBLY, AND THEN GO TO NEXT STEP

OK

6	CHECK BLOCKAGE(OCV AND OIL HOLE)

NG → REPAIR OR REPLACE

OK

7	PERFORM SIMULATION TEST(CHECK DTC)

(a) Clear the DTC (See page 05–5).
(b) Perform the simulation test.
(c) Check whether or not DTC P1349 is stored (See page 05–5).

Result:

	A	B
RESULT	P1349 is output.	P1349 is not output.

HINT:
DTC P1349 is also output when a foreign object is detected in some parts of the system in the engine oil, and then the system returns to normal in a short time. As ECM is controlled to eject a foreign object, there is no problem on the VVT. There is also no problem on the VVT as the oil filter should catch the foreign object in the engine oil.

B → VVT SYSTEM OK

A

CHECK AND REPLACE ECM

OBD II scan tool (excluding hand–held tester):

1	CHECK VALVE TIMING (See page 14–100)

NG → ADJUST VALVE TIMING

OK

2 CHECK OPERATION OF OCV

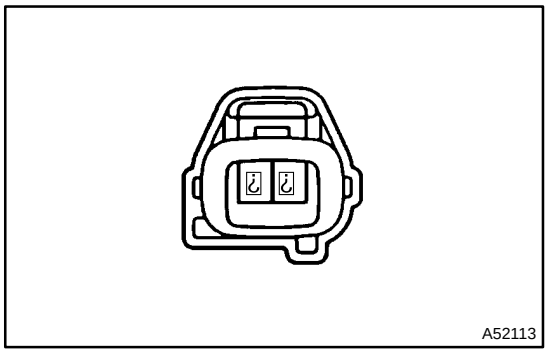

(a) Start the engine.
(b) Check the engine speed when disconnecting the OCV connector.
(c) Check the engine speed when applying battery positive voltage to the terminals of the OCV.

Result:

Result	Check (b)	Check (c)
A	Normal engine speed	Rough idle or engine stall
B	Except 1	

B → **Go to step 4**

A

3 INSPECT ECM(CHECK VOLTAGE)

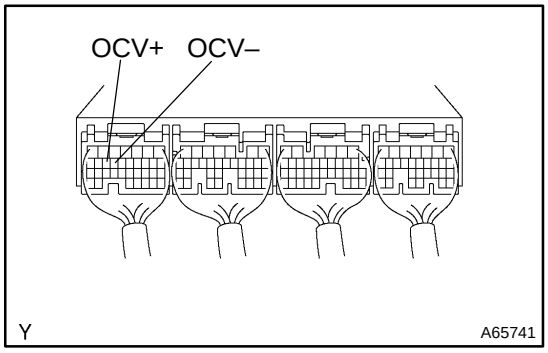

(a) Turn the ignition switch ON.
(b) Check the waveform between terminals OCV+ and OCV– of the ECM connector.

HINT:

- The correct waveform is as shown in the left.
- The waveform frequency (A) becomes longer as the engine speed becomes higher.
- DTC P1349 is also output when a foreign object is detected in some parts of the system in the engine oil, and then the system returns to normal in a short time. As ECM is controlled to eject a foreign object, there is no problem on the VVT. There is also no problem on the VVT as the oil filter should catch the foreign object in the engine oil.

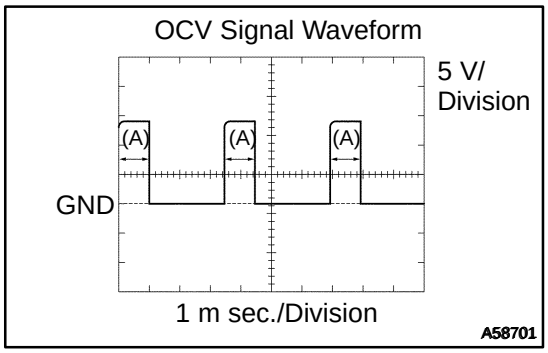

OK → **VVT SYSTEM OK**

NG

CHECK AND REPLACE ECM

4 INSPECT CAMSHAFT TIMING GEAR ASSY (See page 14–100)

NG → **REPLACE VVT CONTROLLER ASSEMBLY, AND THEN GO TO NEXT STEP**

OK

5	INSPECT CAMSHAFT TIMING OIL CONTROL VALVE ASSY (See page 10–2)

NG → REPLACE CAMSHAFT TIMING OIL CONTROL VALVE ASSEMBLY, AND THEN GO TO NEXT STEP

OK

6	CHECK BLOCKAGE(OCV AND OIL HOLE)

NG → REPAIR OR REPLACE

OK

7	PERFORM SIMULATION TEST(DTC CHECK)

(a) Clear the DTC (See page 05–5).
(b) Perform the simulation test.
(c) Check whether or not DTC P1349 is stored (See page 05–5).

Result:

	A	B
RESULT	P1349 is output.	P1349 is not output.

HINT:
DTC P1349 is also output when a foreign object is detected in some parts of the system in the engine oil, and then the system returns to normal in a short time. As ECM is controlled to eject a foreign object, there is no problem on the VVT. There is also no problem on the VVT as the oil filter should catch the foreign object in the engine oil.

B → VVT SYSTEM OK

A

CHECK AND REPLACE ECM

DTC	P1520	STOP LIGHT SWITCH CIRCUIT MALFUNCTION

This signal is used to detect that the brakes have been applied. The STP signal voltage is the same as the one supplied to the stop lights.The STP signal is used mainly to control the fuel cut–off engine speed (The fuel cut–off engine speed is reduced slightly when the vehicle is braking.).

DTC No.	DTC Detecting Condition	Trouble Area
P1520	Stop light switch does not turn off when repeating driving at 30 km or more and 10 time or more after depressing brake (2 trip detection logic)	• Short in stop light switch signal circuit • Stop light switch • ECM

WIRING DIAGRAM

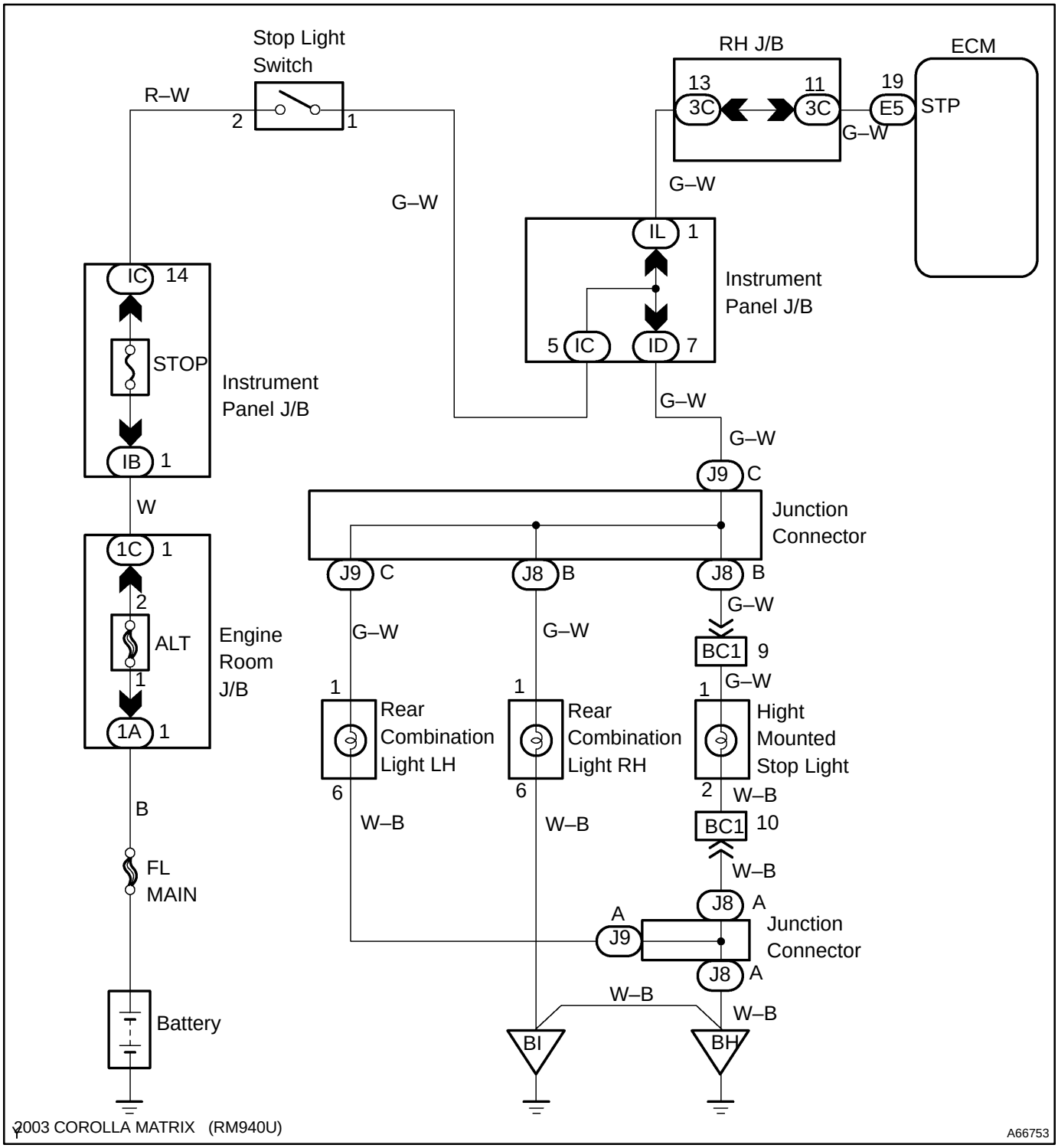

2003 COROLLA MATRIX (RM940U) A66753

INSPECTION PROCEDURE

HINT:

Read freeze frame data using the hand–held tester or OBD II scan tool, as freeze frame data records the engine conditions when the malfunction is detected. When troubleshooting, it is useful for determining whether the vehicle was running or stopped, the engine was warmed up or not, the air–fuel ratio was lean or rich, etc. at the time of the malfunction.

Hand–held tester:

1	CHECK OPERATION OF STOP LIGHT

(a) Check if the stop lights go on and off normally when the brake pedal is operated and released.

NG → **REPAIR OR REPLACE STOP LIGHT SWITCH CIRCUIT**

OK

2	READ VALUE OF HAND–HELD TESTER

(a) Connect the hand–held tester to the DLC3.
(b) Turn the ignition switch ON and push the hand–held tester main switch ON.
(c) Read the STP signal on the hand–held tester.

Result:

Brake Pedal	STP Signal
Depressed	ON
Released	OFF

OK → **CHECK FOR INTERMITTENT PROBLEMS**

NG

3	CHECK WIRE HARNESS OR CONNECTOR(ECM–STOP LIGHT SWITCH)

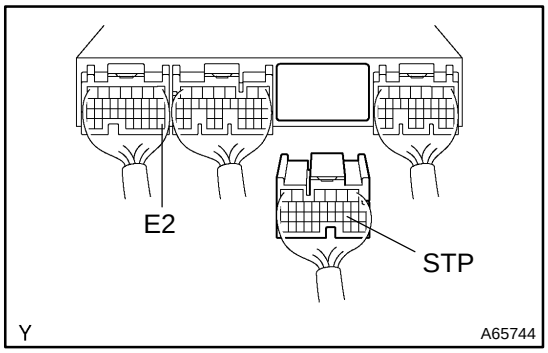

(a) Disconnect the ECM E5 connector.
(b) Disconnect the stop light connector.
(c) Check for open between the terminals STP of the ECM connector and 1 of the stop light connector.
Resistance: 1 Ω or less
(d) Check for short between the terminals STP of the ECM connector and E2 of the ECM connector.
Resistance: 1 MΩ or more

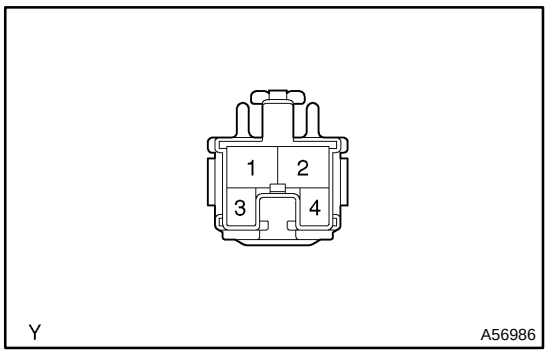

NG → **REPAIR OR REPLACE WIRE HARNESS OR CONNECTOR**

OK

CHECK AND REPLACE ECM

OBD II scan tool (excluding hand–held tester):

1	CHECK OPERATION OF STOP LIGHT

(a) Check if the stop lights go on and off normally when the brake pedal is operated and released.

NG → **REPAIR OR REPLACE STOP LIGHT SWITCH CIRCUIT**

OK

2	CHECK STP SIGNAL

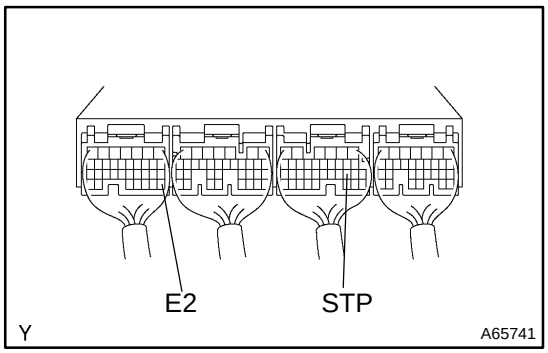

(a) Turn the ignition switch ON.
(b) Check the voltage between terminal STP and E2 of the ECM connector.
Voltage:

Brake Pedal	Voltage
Depressed	7.5 – 14 V
Released	Below 1.5 V

OK → **CHECK FOR INTERMITTENT PROBLEMS**

NG

3	CHECK HARNESS AND CONNECTOR(ECM–STOP LIGHT SWITCH)

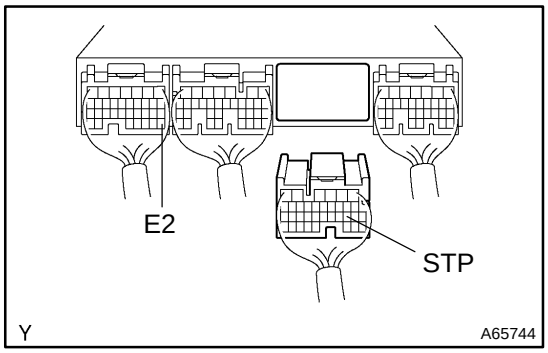

(a) Disconnect the ECM E5 connector.
(b) Disconnect the stop light connector.
(c) Check for open between the terminals STP of the ECM connector and 1 of the stop light connector.
Resistance: 1 Ω or less
(d) Check for short between the terminals STP of the ECM E5 connector and E2 of the ECM E3 connector.
Resistance: 1 MΩ or more

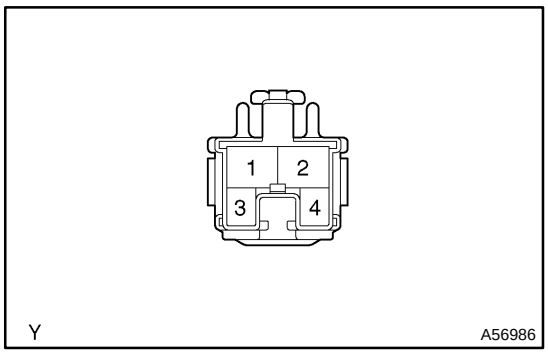

NG → **REPAIR OR REPLACE HARNESS AND CONNECTOR**

OK

CHECK AND REPLACE ECM

DTC	P1600	BACK–UP POWER SOURCE CIRCUIT MALFUNCTION

CIRCUIT DESCRIPTION

Battery positive voltage is applied to terminal BATT of the ECM even when the ignition switch is OFF for use by the DTC memory and air–fuel ratio adaptive control value memory, etc.

DTC No.	DTC Detecting Condition	Trouble Area
P1600	Open in back up power source circuit	• Open in back up power source circuit • ECM

HINT:

If DTC P1600 is displayed, the ECM does not store another DTC.

WIRING DIAGRAM

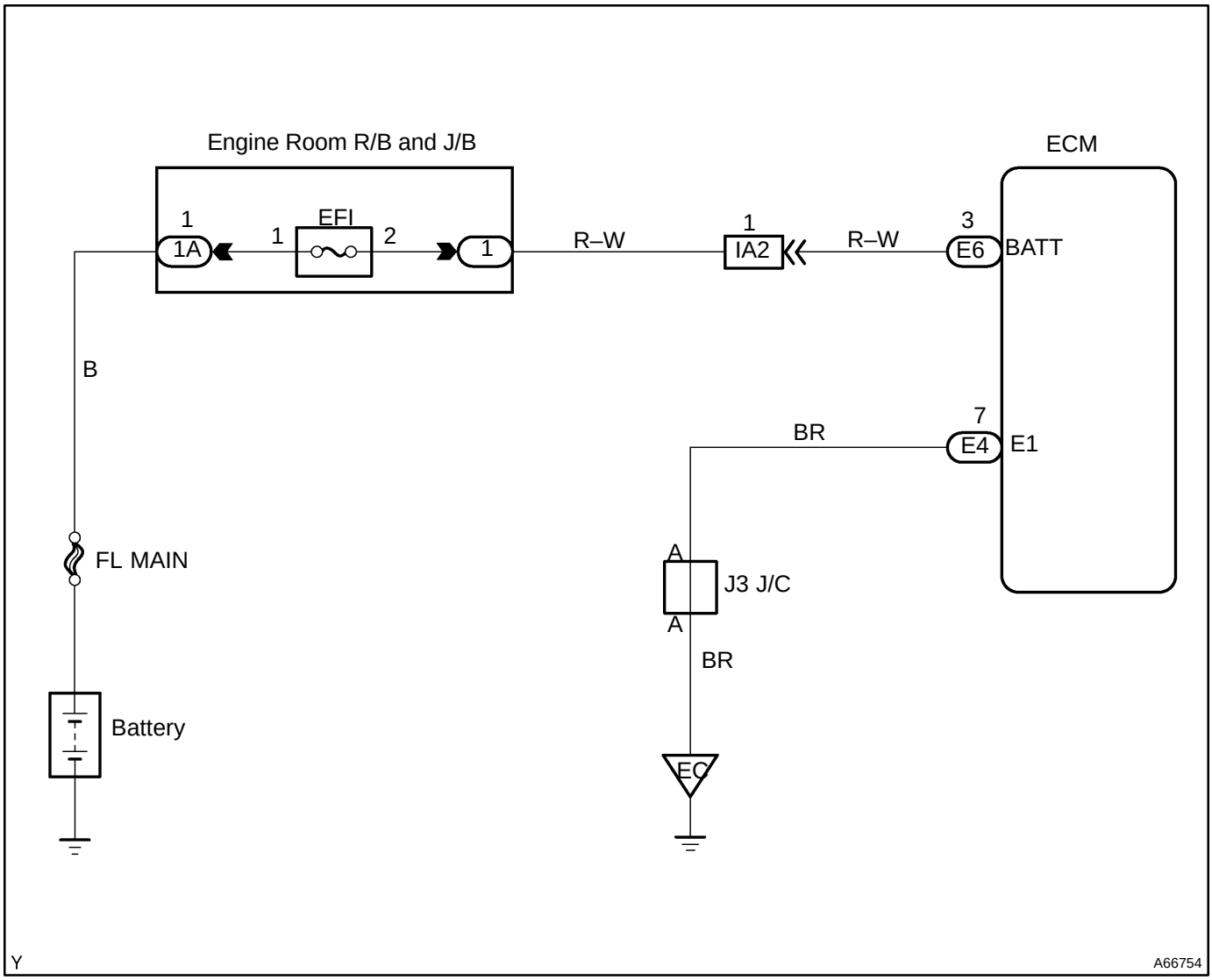

INSPECTION PROCEDURE

HINT:

Read freeze frame data using the hand–held tester or OBD II scan tool, as freeze frame data records the engine conditions when the malfunction is detected. When troubleshooting, it is useful for determining whether the vehicle was running or stopped, the engine was warmed up or not, the air–fuel ratio was lean or rich, etc. at the time of the malfunction.

1	INSPECT ECM(CHECK VOLTAGE)

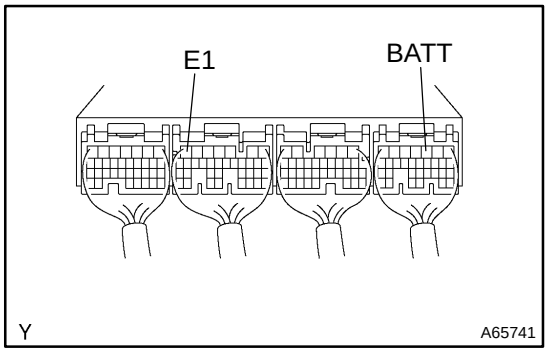

(a) Turn the ignition switch ON.
(b) Measure the voltage between terminal BATT of the ECM connector and E1 of the ECM connector.
Voltage: 9 – 14 V

OK → **CHECK AND REPLACE ECM**

NG

2	CHECK FUSE(E.F.I. FUSE)

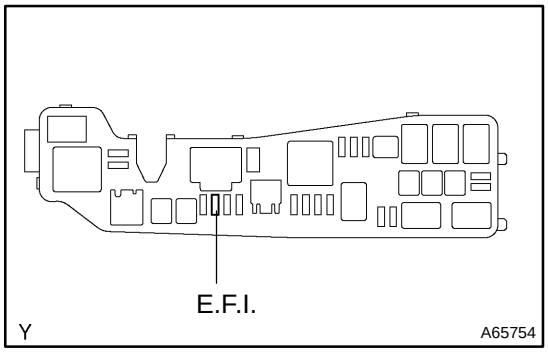

(a) Remove the E.F.I. fuse from the engine room R/B.
(b) Check the continuity of the E.F.I. fuse.
Result: Continuity

NG → **CHECK FOR SHORT IN ALL HARNESS AND COMPONENTS CONNECTED E.F.I. FUSE**

OK

3	CHECK WIRE HARNESS OR CONNECTOR(E.F.I. RELAY–ECM)

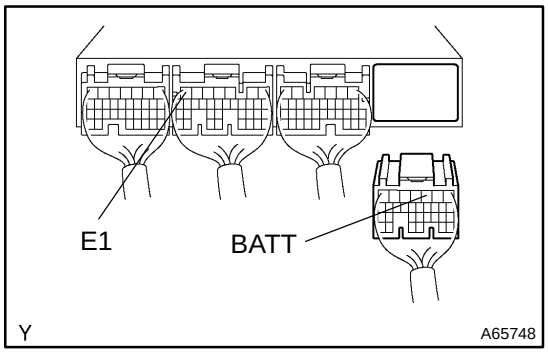

(a) Disconnect the ECM E6 connector.
(b) Remove the E.F.I. relay.
(c) Check continuity between the terminals BATT of the ECM connector and 3 of the E.F.I. relay installation relay block.
Resistance: 1 Ω or less
(d) Check for short between the terminals BATT of the ECM connector and E1 of the ECM connector.
Resistance: 1 MΩ or more

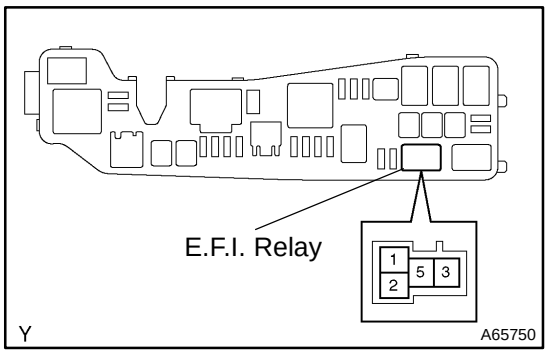

NG → **REPAIR OR REPLACE WIRE HARNESS OR CONNECTOR**

OK

CHECK AND REPLACE ECM

DTC P1656 OCV CIRCUIT MALFUNCTION (BANK 1)

CIRCUIT DESCRIPTION

Refer to DTC P1349 on page 05–123.

DTC No.	DTC Detecting Condition	Trouble Area
P1656	Open or short in oil control valve circuit	• Open or short in oil control valve circuit • Oil control valve • ECM

WIRING DIAGRAM

Refer to DTC P1349 on page 05–123.

INSPECTION PROCEDURE

HINT:

Read freeze frame data using hand–held tester or OBD II scan tool. Because freeze frame records the engine conditions when the malfunction is detected, when troubleshooting it is useful for determining whether the vehicle was running or stopped, the engine warmed up or not, the air–fuel ratio lean or rich, etc. at the time of the malfunction

Hand–held tester:

1	PERFORM ACTIVE TEST BY HAND–HELD TESTER(OCV OPERATION)

(a) Start the engine and warm it up.
(b) Connect the hand–held tester and select the VVT on the ACTIVE TEST menu.
(c) Check the engine speed when operating the OCV by using the hand–held tester.
Result:
VVT system is OFF (OCV is OFF): Normal engine speed
VVT system is ON (OCV is ON): Rough idle or engine stalled

OK → **CHECK FOR INTERMITTENT PROBLEMS**

NG

2	INSPECT CAMSHAFT TIMING OIL CONTROL VALVE ASSY (See page 10–2)

NG → **REPLACE CAMSHAFT TIMING OIL CONTROL VALVE ASSY**

OK

3	INSPECT ECM(CHECK VOLTAGE) (See page 05–123)

NG → **CHECK AND REPLACE ECM**

OK

4	CHECK WIRE HARNESS OR CONNECTOR(ECM–OCV)

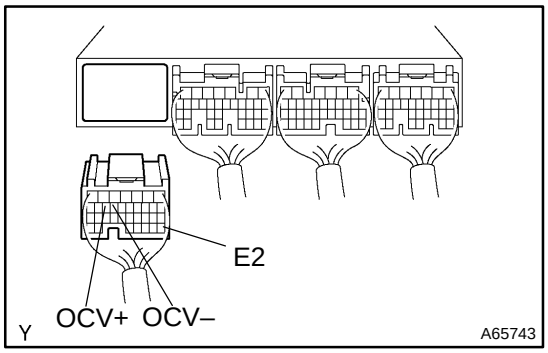

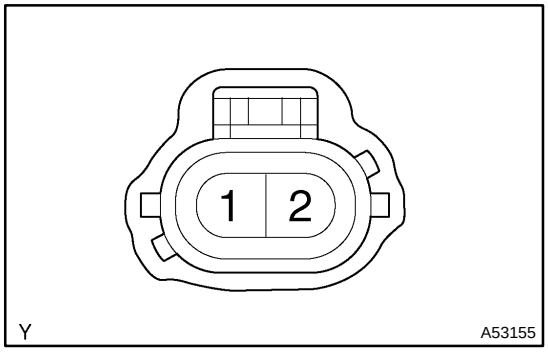

(a) Disconnect the ECM E3 connector.
(b) Disconnect the camshaft timing control valve connector.
(c) Check continuity between the terminals OCV+ of the ECM connector and 1 of the camshaft timing control valve connector.
Resistance: 1 Ω or less
(d) Check for short between the terminals OCV+ of the ECM connector and E2 of the ECM connector.
Resistance: 1 MΩ or more
(e) Check continuity between the terminals OCV– of the ECM connector and 2 of the camshaft timing control valve connector.
Resistance: 1 Ω or less
(f) Check for short between the terminals OCV– of the ECM connector and E2 of the ECM connector.
Resistance: 1 MΩ or more

NG → **REPAIR OR REPLACE WIRE HARNESS OR CONNECTOR**

OK

CHECK FOR INTERMITTENT PROBLEMS

OBD II scan tool (excluding hand–held tester):

1	CHECK OPERATION OF OCV

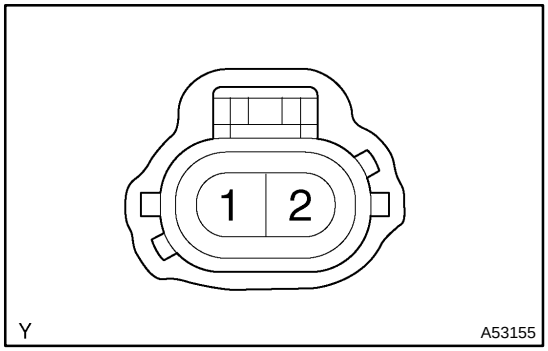

(a) Start the engine and warm it up.
(b) Disconnect the OCV connector.
(c) Apply battery positive voltage to the terminals of the OCV.
(d) Check the engine speed.
Result: Rough idle or engine stalled

NG → **REPLACE CAMSHAFT TIMING OIL CONTROL VALVE ASSY**

OK

2	INSPECT ECM(CHECK VOLTAGE)

NG → **CHECK AND REPLACE ECM**

OK

3	CHECK HARNESS AND CONNECTOR(ECM–OCV)

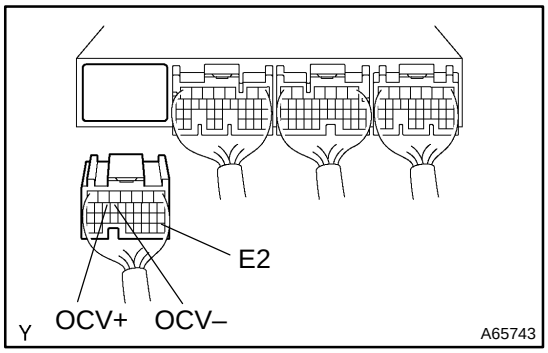

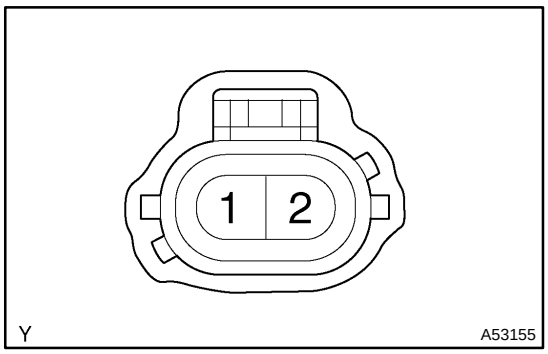

(a) Disconnect the ECM E3 connector.
(b) Disconnect the camshaft timing control valve connector.
(c) Check continuity between the terminals OCV+ of the ECM connector and 1 of the camshaft timing control valve connector.
Resistance: 1 Ω or less
(d) Check for short between the terminals OCV+ of the ECM connector and E2 of the ECM connector.
Resistance: 1 MΩ or more
(e) Check continuity between the terminals OCV– of the ECM connector and 2 of the camshaft timing control valve connector.
Resistance: 1 Ω or less
(f) Check for short between the terminals OCV– of the ECM connector and E2 of the ECM connector.
Resistance: 1 MΩ or more

NG → **REPAIR OR REPLACE HARNESS AND CONNECTOR**

OK

CHECK FOR INTERMITTENT PROBLEMS

DTC	P1780	PARK/NEUTRAL POSITION SWITCH MALFUNCTION

CIRCUIT DESCRIPTION

The neutral start switch goes on when the shift lever is in the N or P shift position. When it goes on, terminal NSW of the ECM is grounded to the body ground via the starter relay, thus the terminal NSW voltage becomes 0V. When the shift lever is in the D, 2, L or R position, the park/neutral position switch goes off, so the voltage of the ECM. Terminal NSW becomes battery voltage and the voltage of the ECM internal power source. If the shift lever is moved from the N position to the D position, this signal is used for air–fuel ratio correction and for idle speed control (estimated control), etc.

DTC No.	DTC Detecting Condition	Trouble Area
P1780	2 or more switches are ON simultaneously for N, 2, L and R positions (2 trip detection logic)When driving under conditions (a) and (b) for 30 seconds or more neutral start switch is ON (N position): (2 trip detection logic) (a) Vehicle speed: 70 km/h (44 mph) or more (b) Engine speed: 1,500 – 2,500 rpm	• Short in neutral start switch circuit • Neutral start switch • ECM

HINT:

After confirming DTC P1780, use the hand–held tester to confirm the neutral start switch signal from the CURRENT DATA.

WIRING DIAGRAM

Refer to DTC P1780 on page 05–410.

INSPECTION PROCEDURE

Refer to DTC P1780 on page 05–410.

DTC P0100 MASS AIR FLOW CIRCUIT MALFUNCTION

CIRCUIT DESCRIPTION

The mass air flow meter uses a platinum hot wire. The hot wire air flow meter consists of a platinum hot wire, thermistor and a control circuit installed in a plastic housing. The hot wire air flow meter works on the principle that the hot wire and thermistor located in the intake air bypass of the housing detect any changes in the intake air temperature.

The hot wire is maintained at the set temperature by controlling the current flow through the hot wire. This current flow is then measured as the output voltage of the air flow meter.

The circuit is constructed so that the platinum hot wire and thermistor provide a bridge circuit, with the power transistor controlled so that the potential of A and B remains equal to maintain the set temperature.

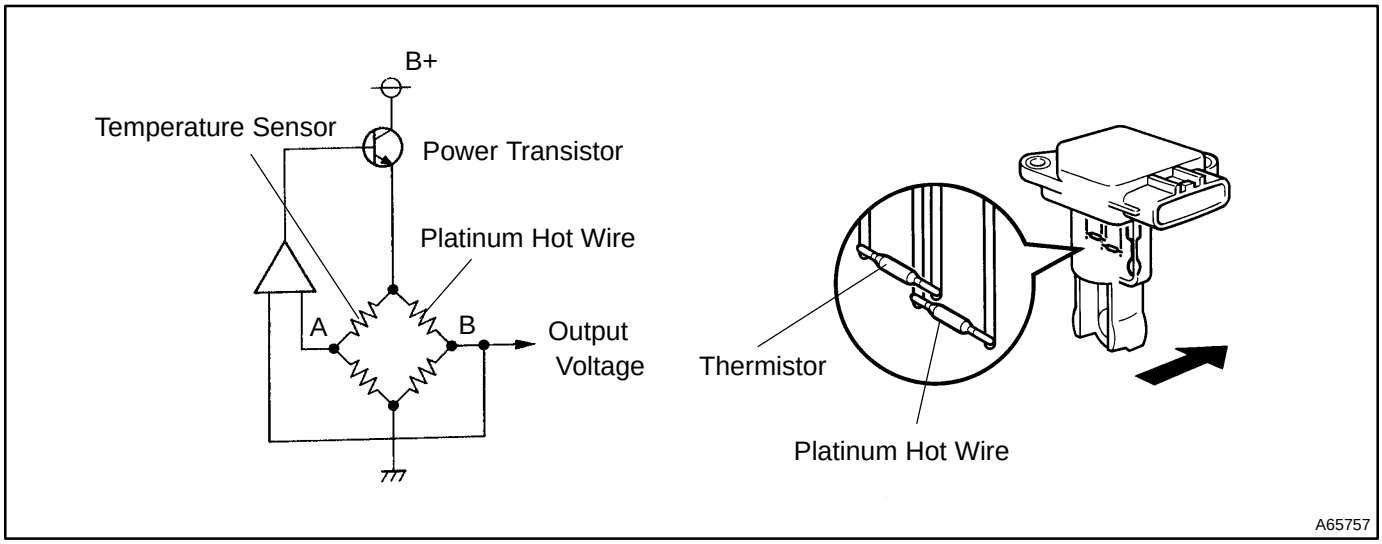

DTC No	DTC Detecting Condition	Trouble Area
P0100	Open or short in air flow meter circuit with more than 3 sec. engine speed less than 4,000 rpm	• Open or short in air flow meter circuit • Air flow meter • ECM

If the ECM detects DTC ”P0100” it operates the fail–safe function, keeping the ignition timing and injection volume constant and making it possible to drive the vehicle.

HINT:

After confirming DTC P0100, use the OBD II scan tool or hand–held tester to confirm the air flow ratio from CURRENT DATA.

Mass Air Flow Value (gm/sec.)	Malfunction
Approx. 0.0	• Mass air flow meter power source circuit open • VG circuit open or short
271.0 or more	• EVG circuit open

WIRING DIAGRAM

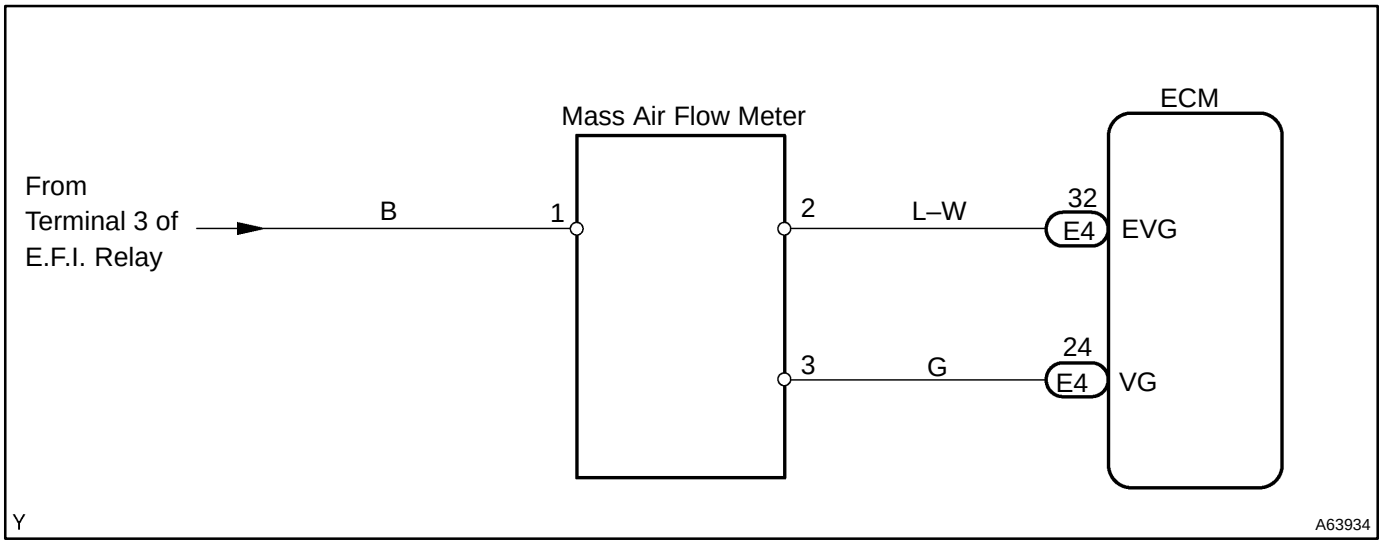

INSPECTION PROCEDURE

HINT:

Read freeze frame data using hand–held tester or OBD II scan tool. Because freeze frame records the engine conditions when the malfunction is detected, when troubleshooting it is useful for determining whether the vehicle was running or stopped, the engine warmed up or not, the air–fuel ratio lean or rich, etc. at the time of the malfunction.

1	READ VALUE OF OBD II SCAN TOOL OR HAND–HELD TESTER(MASS AIR FLOW RATE)

(a) Read mass air flow rate on the hand–held tester or OBD II scan tool.

Result:

	A	B
Mass air flow rate (gm/sec.)	0.0	271.0 or more

B → **Go to step 6**

A

2	INSPECT INTAKE AIR FLOW METER SUB–ASSY(POWER SOUCE VOLTAGE)

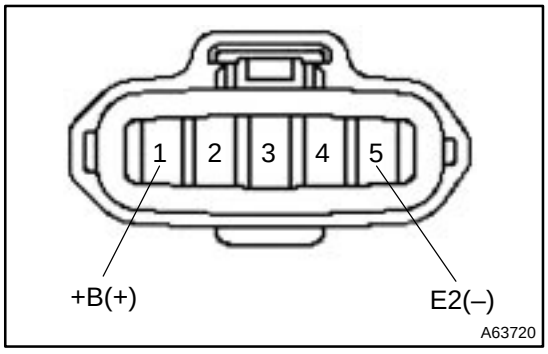

(a) Disconnect the mass air flow meter connector.
(b) Turn the ignition switch ON.
(c) Measure voltage between the terminals +B and E2 of the mass air flow meter connector.
Voltage: 9 – 14 V

NG → **Go to step 5**

OK

3 INSPECT ECM

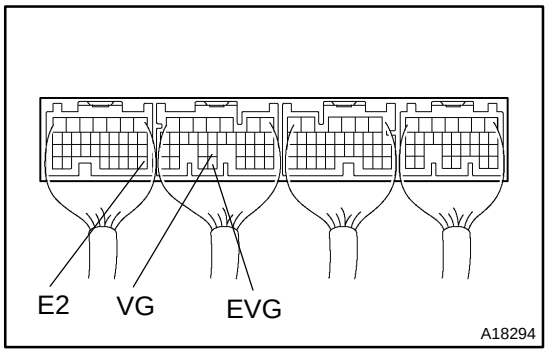

(a) Turn the ignition switch ON.
(b) Measure voltage between the terminals VG and EVG of the ECM connector while the engine is idling.
Voltage: 0.5 – 3.0 V

HINT:
The shift position should be P or N and A/C switch should be turned OFF.

NG → **CHECK AND REPLACE ECM**

OK

4 CHECK HARNESS AND CONNECTOR(ECM–MASS AIR FLOW METER)

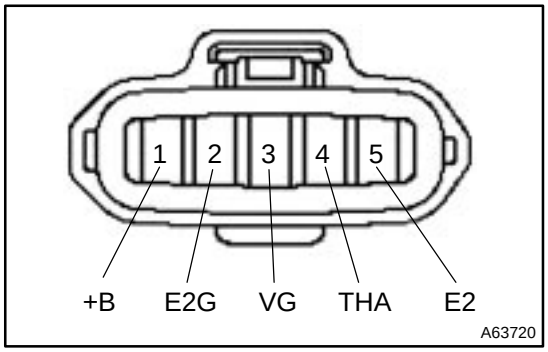

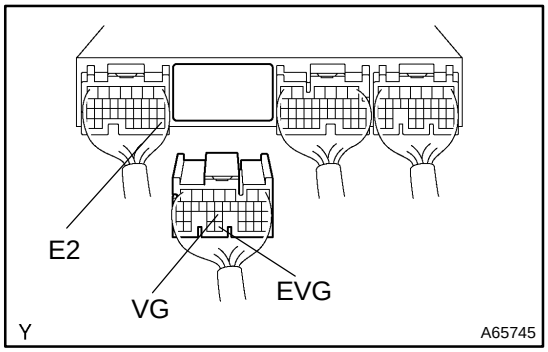

(a) Disconnect the mass air flow meter connector.
(b) Disconnect the ECM E4 connector.
(c) Check continuity between the terminals VG of the mass air flow meter harness connector and VG of the ECM connector.
Resistance: 1 Ω or less
(d) Check for open between the terminals E2G of the mass air flow meter connector and EVG of the ECM connector.
Resistance: 1 Ω or less
(e) Check for short between the terminals VG and EVG of the ECM connector.
Resistance: 1 MΩ or more
(f) Check for short between the terminals EVG and E2 of the ECM connector.
Resistance: 1 MΩ or more

NG → **REPAIR OR REPLACE HARNESS AND CONNECTOR**

OK

REPLACE INTAKE AIR FLOW METER SUB–ASSY

5	CHECK HARNESS AND CONNECTOR(E.F.I. RELAY–MASS AIR FLOW METER)

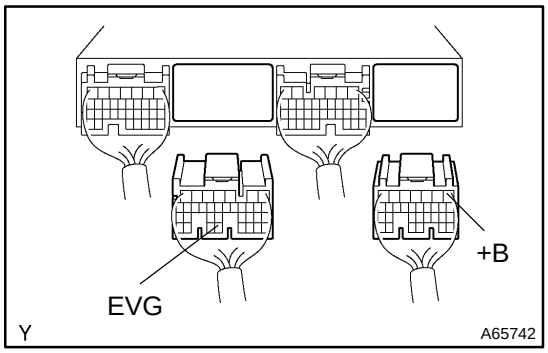

(a) Disconnect the battery negative (–) terminal.
(b) Disconnect the ECM E6 connector.
(c) Check continuity between the terminals +B of the ECM connector and 3 of the E.F.I. relay installation relay block.
Resistance: 1 Ω or less

(d) Check continuity between the terminals E2G of the mass air flow meter connector and EVG of the ECM connector.
Resistance: 1 Ω or less

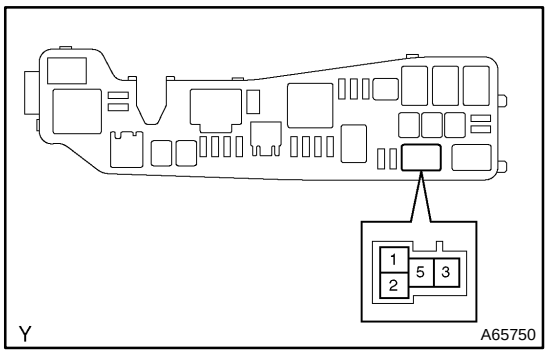

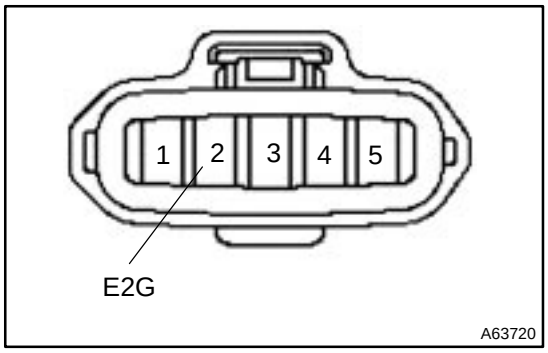

NG → **REPAIR OR REPLACE HARNESS AND CONNECTOR**

OK

CHECK FOR ECM POWER SOURCE CIRCUIT

6	INSPECT ECM

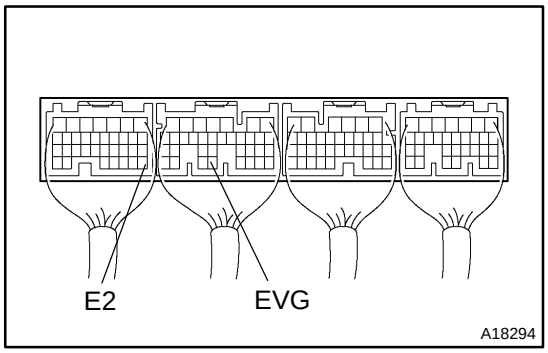

(a) Check continuity between the terminals EVG and E2 of the ECM connector.
Resistance: 1 Ω or less

NG → **CHECK AND REPLACE ECM**

OK

7	CHECK HARNESS AND CONNECTOR(ECM–MASS AIR FLOW METER)

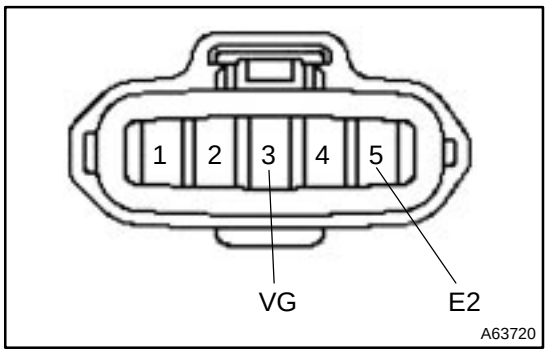

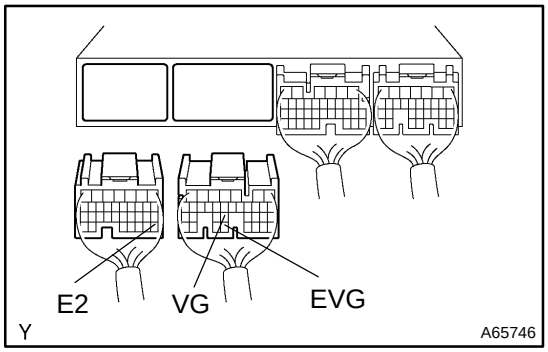

(a) Disconnect the mass air flow meter connector.
(b) Check for open between the terminals VG of the mass air flow meter connector and VG of the ECM connector.
Resistance: 1 Ω or less
(c) Check for open between the terminals E2 of the mass air flow meter harness connector and E2 of the ECM connector.
Resistance: 1 Ω or less
(d) Disconnect the ECM E3 and E4 connector.
(e) Check for short between the terminals VG and E2 of the ECM connector.
Resistance: 1 MΩ or more
(f) Check for short between the terminals EVG and E2 of the ECM connector.
Resistance: 1 MΩ or more

NG → **REPAIR OR REPLACE HARNESS AND CONNECTOR**

OK

CHECK AND REPLACE ECM

DTC	P0101	MASS AIR FLOW CIRCUIT RANGE/PERFORMANCE PROBLEM

CIRCUIT DESCRIPTION

Refer to DTC P0100 on page 05–25.

DTC No.	DTC Detecting Condition	Trouble Area
P0101	After engine is warmed up, conditions (a) and (b) continue with more than 10 sec. engine speed 900 rpm or less: (2 trip detection logic) (a) Throyyle valve fully closed (b) Mass air flow meter out put > 2.2 V (c) THW > 70°C (158°F)	• Mass air flow meter
	Conditions (a) and (b) continue with more than 10 sec. engine speed 1,500 rpm or more: (2 trip detection logic) (a) VTA ≧ 0.1 V (b) Mass air flow meter output < 1.00 V	

WIRING DIAGRAM

Refer to DTC P0100 on page 05–25 for the WIRING DIAGRAM.

INSPECTION PROCEDURE

HINT:

Read freeze frame data using hand–held tester or OBD II scan tool. Because freeze frame records the engine conditions when the malfunction is detected, when troubleshooting it is useful for determining whether the vehicle was running or stopped, the engine warmed up or not, the air–fuel ratio lean or rich, etc. at the time of the malfunction.

1	READ OUTPUT DTC(BESIDES P0101)

Result:

	A	B
RESULT	Only P0101 is output.	P0101 and other codes are output.

B → REPLACE INTAKE AIR FLOW METER SUB–ASSY

A

GO TO RELEVANT DTC CHART

DTC P0110 INTAKE AIR TEMP. CIRCUIT MALFUNCTION

CIRCUIT DESCRIPTION

(fig. 1)

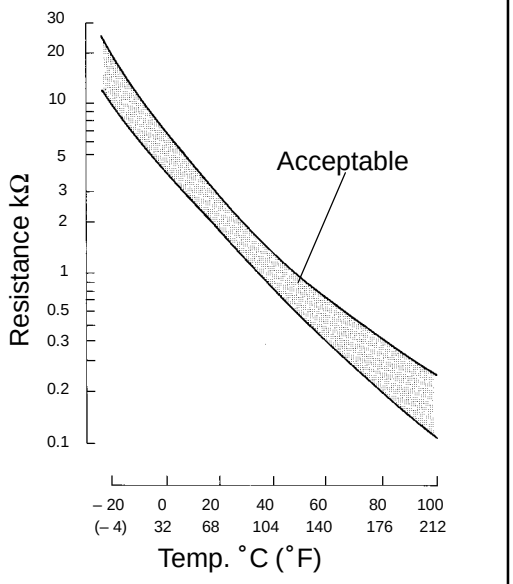

The intake air temp. sensor is built into the mass air flow meter and senses the intake air temperature.
A thermistor built in the sensor changes the resistance value according to the intake air temperature.
The lower the intake air temperature, the greater the thermistor resistance value, and the higher the intake air temperature, the lower the thermistor resistance value (See fig. 1).
The intake air temp. sensor is connected to the ECM (See below). The 5 V power source voltage in the ECM is applied to the intake air temp. sensor from the terminal THA via resistor R.
That is, the resistor R and the intake air temp. sensor are connected in series. When the resistance value of the intake air temp. sensor changes in accordance with changes in the intake air temperature, the potential at terminal THA also changes. Based on this signal, the ECM increases the fuel injection volume to improve driveability during cold engine operation.
If the ECM detects the DTC ”P0110”, it operates the fall safe function in which the intake air temperature is assumed to be 20°C (68°F).

DTC No.	DTC Detecting Condition	Trouble Area
P0110	Open or short in intake air temp. sensor circuit	• Open or short in intake air temp. sensor circuit • Intake air temp. sensor (inside mass air flow meter) • ECM

WIRING DIAGRAM

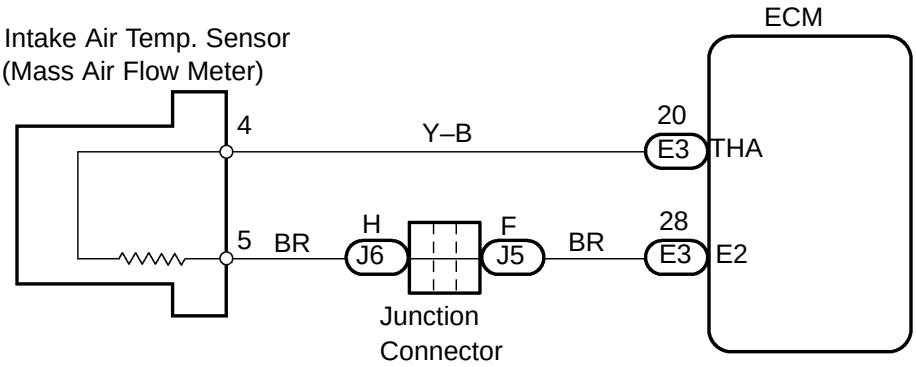

INSPECTION PROCEDURE

HINT:

- If DTCs P0100, P0101, P0110, P0115, P0116, P120 and P0121 are output simultaneously, E2 (sensor ground) may be open.
- Read freeze frame data using hand–held tester or OBD II scan tool. Because freeze frame records the engine conditions when the malfunction is detected, when troubleshooting it is useful for determining whether the vehicle was running or stopped, the engine warmed up or not, the air–fuel ratio lean or rich, etc. at the time of the malfunction.

1	READ VALUE OF OBD II SCAN TOOL OR HAND–HELD TESTER(INTAKE AIR TEMPERATURE)

(a) Read temperature value on the hand–held tester or OBD II scan tool.
Temperature: The same as actual intake air temperature

Result:

A	B	C
–40˚C (–40˚F)	140˚C (284˚F) or more	OK

B → **Go to step 4**

C → **CHECK FOR INTERMITTENT PROBLEMS**

A

2	READ VALUE OF OBD II SCAN TOOL OR HAND–HELD TESTER(CHECK FOR OPEN IN HARNESS)

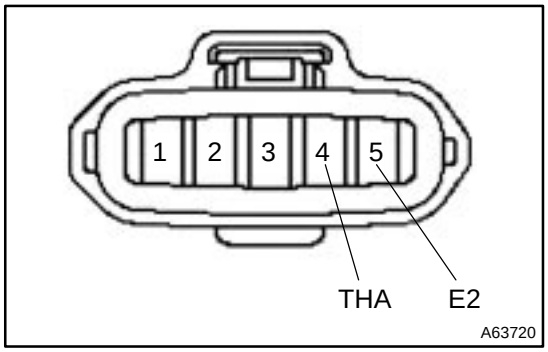

(a) Disconnect the mass air flow meter connector.
(b) Connect the terminal THA with E2.
(c) Turn the ignition switch ON.
(d) Read temperature value on the hand–held tester or OBD II scan tool.
Temperature: 140°C (284°F) or more

OK → **REPLACE INTAKE AIR FLOW METER SUB–ASSY**

NG

3	READ VALUE OF OBD II SCAN TOOL OR HAND–HELD TESTER(CHECK FOR OPEN IN ECM)

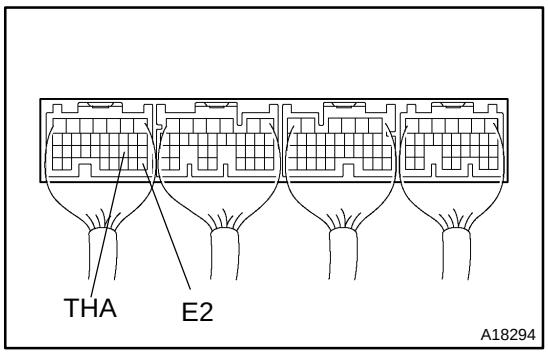

(a) Disconnect the mass air flow meter connector.
(b) Turn the ignition switch ON.
(c) Connect the terminals THA with E2 of the ECM connector.

HINT:
Before checking, do a visual check and connector connection and terminal inspection of the ECM.

(d) Read temperature value on the hand–held tester or OBD II scan tool.
Temperature: 140°C (284°F) or more

NG → **CHECK AND REPLACE ECM**

OK

READ VALUE OF HARNESS AND CONNECTOR

4	READ VALUE OF OBD II SCAN TOOL OR HAND–HELD TESTER(CHECK FOR SHORT IN HARNESS)

(a) Disconnect the mass air flow meter connector.
(b) Turn the ignition switch ON.
(c) Read temperature value on the hand–held tester or OBD II scan tool.
Temperature: –40°C(–40°F)

OK → **REPLACE INTAKE AIR FLOW METER SUB–ASSY**

NG

5	READ VALUE OF OBD II SCAN TOOL OR HAND–HELD TESTER(CHECK FOR SHORT IN ECM)

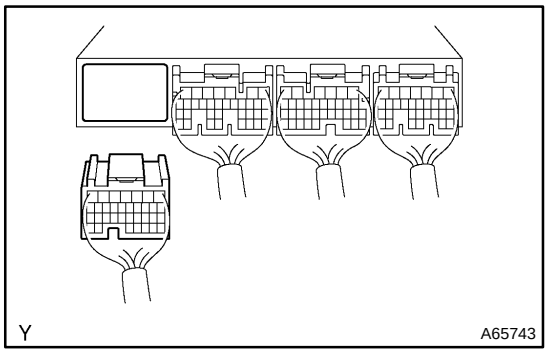

(a) Disconnect the the ECM E3 connector.
(b) Turn the ignition switch ON.
(c) Read temperature value on the hand–held tester or OBD II scan tool.
Temperature: –40°C (–40°F)

OK → **REPAIR OR REPLACE HARNESS AND CONNECTOR**

NG

CHECK AND REPLACE ECM

DTC	P0115	ENGINE COOLANT TEMP. CIRCUIT MALFUNCTION

CIRCUIT DESCRIPTION

A thermistor built into the engine coolant temp. sensor changes the resistance value according to the engine coolant temp.

The structure of the sensor and connection to the ECM is the same as in the intake air temp. circuit malfunction shown on page 05–31.

If the ECM detects the DTC P0115, it operates fail safe function in which the engine coolant temperature is assumed to be 80°C (176°F).

DTC No.	Detection Item	Trouble Area
P0115	Open or short in engine coolant temp. sensor circuit	• Open or short in engine coolant temp. sensor circuit • Engine coolant temp. sensor • ECM

HINT:

After confirming DTC P0115, use the hand–held tester or OBD II scan tool to confirm the engine coolant temp. from ”CURRENT DATA”.

Temp. Displayed	Malfunction
–40°C (–40°F)	Open circuit
140°C (284°F) or more	Short circuit

WIRING DIAGRAM

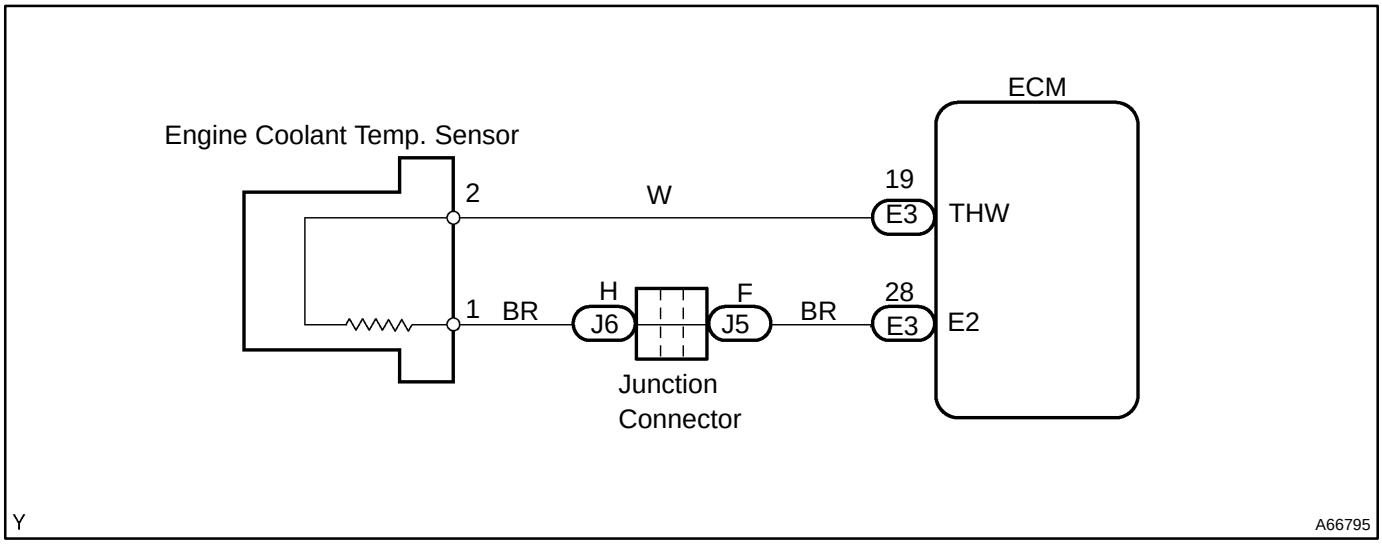

INSPECTION PROCEDURE

HINT:

- If DTC P0100 (Mass Air Flow Meter Circuit Malfunction), P0101 (Mass Air Flow Meter Circuit Range/Performance Problem), P0110 (Intake Air Temp. Circuit Malfunction), P0115 (Engine coolant Temp. Circuit Malfunction), P0120 (Throttle/Pedal Position Sensor/Switch ”A” Malfunction) are output simultaneously, E1, E2 etc. (Sensor Ground system) may be open.
- Read freeze frame data using hand–held tester or OBD II scan tool. Because freeze frame records the engine conditions when the malfunction is detected, when troubleshooting it is useful for determining whether the vehicle was running or stopped, the engine warmed up or not, the air–fuel ratio lean or rich, etc. at the time of the malfunction.

1	READ VALUE OF OBD II SCAN TOOL OR HAND–HELD TESTER(ENGINE COOLANT TEMPERATURE)

(a) Read temperature value on the hand–held tester or OBD II scan tool.
Temperature: Same as actual water temperature

Result:

A	B	C
–40°C (–40°F)	140°C (284°F)	OK

B → **Go to step 4**

C → **CHECK FOR INTERMITTENT PROBLEMS**

A

2	READ VALUE OF OBD II SCAN TOOL OR HAND–HELD TESTER(CHECK FOR OPEN IN HARNESS)

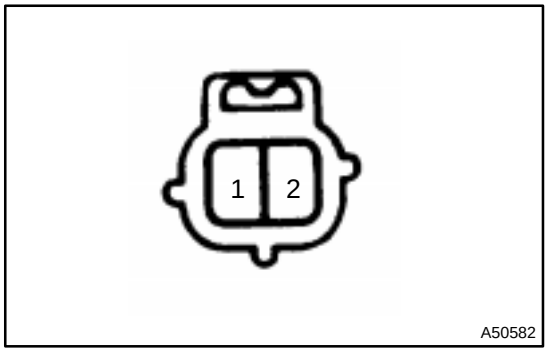

(a) Disconnect the engine coolant temperature sensor connector.
(b) Connect the terminals 1 with 2 of the engine coolant temperature sensor connector.
(c) Turn the ignition switch ON.
(d) Read temperature value on the hand–held tester or OBD II scan tool.
Temperature: 140°C (284°F) or more

OK → **REPLACE E.F.I. ENGINE COOLANT TEMPERATURE SENSOR**

NG

3	READ VALUE OF OBD II SCAN TOOL OR HAND–HELD TESTER(CHECK FOR OPEN IN ECM)

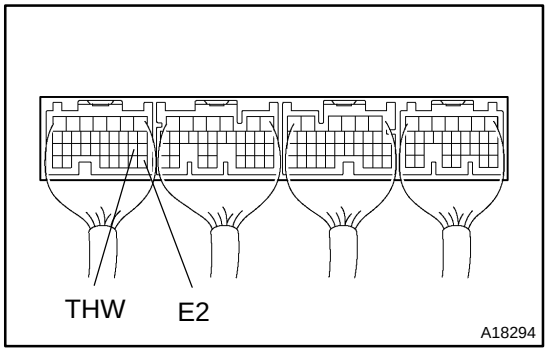

(a) Connect the terminals THW with E2 of the ECM connector.
(b) Turn the ignition switch ON.
(c) Read temperature value on the hand–held tester or OBD II scan tool.
Temperature: 140°C (284°F) or more

OK → **REPAIR OR REPLACE HARNESS AND CONNECTOR**

NG

CHECK AND REPLACE ECM

4	READ VALUE OF OBD II SCAN TOOL OR HAND–HELD TESTER(CHECK FOR SHORT IN HARNESS)

(a) Disconnect the water temp. sensor connector.
(b) Turn the ignition switch ON.
(c) Read temperature value on the hand–held tester or OBD II scan tool.
Temperature: –40°C (–40°F)

OK → **REPLACE E.F.I. ENGINE COOLANT TEMPERATURE SENSOR**

NG

5	READ VALUE OF OBD II SCAN TOOL OR HAND–HELD TESTER(CHECK FOR SHORT IN ECM)

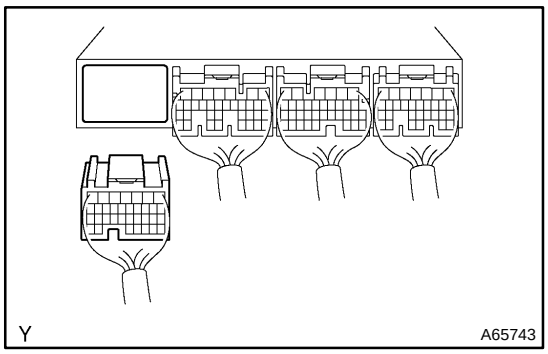

(a) Disconnect the ECM E3 connector.
(b) Turn the ignition switch ON.
(c) Read temperature value on the hand–held tester or OBD II scan tool.
Temperature: –40°C (–40°F)

OK → **REPAIR OR REPLACE HARNESS AND CONNECTOR**

NG

CHECK AND REPLACE ECM

DTC	P0116	ENGINE COOLANT TEMP. CIRCUIT RANGE/PERFORMANCE PROBLEM

CIRCUIT DESCRIPTION

Refer to DTC P0115 on page 05–34.

DTC No.	DTC Detecting Condition	Trouble Area
P0116	When engine starts, water temp. is –7˚C (20˚F) or less. And, 20 min. or more after engine starts, engine coolant temp. sensor value is 20˚C (68˚F) or less (2 trip detection logic)	• Cooling system • Engine coolant temp. sensor • Thermostat
	When the engine starts, water temp. is between –7˚C (20˚F) and 10˚C (50˚F). And, 5 min. or more after the engine starts, the engine coolant temp. sensor value is 20˚C (68˚F) or less (2 trip detection logic)	

INSPECTION PROCEDURE

HINT:

- If DTCs P0110, P0115, P0116, P0120 and P0121 are output simultaneously, engine coolant temperature sensor circuit may be open. Perform the troubleshooting of DTC P0115 first.
- Read freeze frame data using the hand–held tester or OBD scan tool, as freeze frame data records the engine conditions when the malfunction is detected. When troubleshooting, it is useful for determining whether the vehicle was running or stopped, the engine was warmed up or not, the air–fuel ratio was lean or rich, etc. at the time of the malfunction.

1 READ OUTPUT DTC(BESIDES P0116)

Result:

	A	B
RESULT	Only P0116 is output.	P0116 and other codes are output.

B → **GO TO RELEVANT DTC CHART**

A

2 INSPECT THERMOSTAT

NG → **REPLACE THERMOSTAT**

OK

REPLACE E.F.I. ENGINE COOLANT TEMPERATURE SENSOR

DTC	P0120	THROTTLE/PEDAL POSITION SENSOR/SWITCH ”A” CIRCUIT MALFUNCTION

CIRCUIT DESCRIPTION

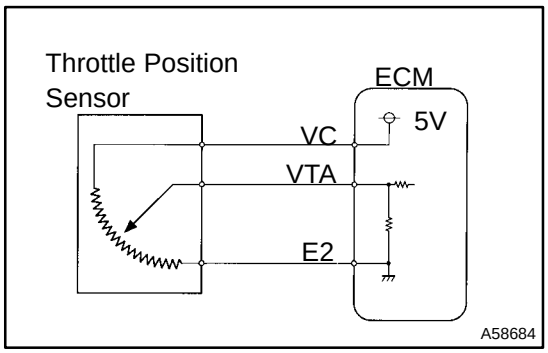

The throttle position sensor is mounted in the throttle body and detects the throttle valve opening angle.
When the throttle valve is fully closed, a voltage of approximately 0.3 – 1.0 V is applied to terminal VTA of the ECM. The voltage applied to the terminals VTA of the ECM increases in proportion to the opening angle of the throttle valve and becomes approximately 3.2 – 4.9 V when the throttle valve is fully opened. The ECM judges the vehicle driving conditions from these signals input from terminal VTA, uses it as one of the conditions for deciding the air–fuel ratio correction, power increase correction and fuel–cut control etc.

DTC No.	DTC Detecting Condition	Trouble Area
P0120	Condition (1) or (2) continues with more than 5 sec.: 1. VTA < 0.1 V 2. VTA > 4.9 V	• Open or short in throttle position sensor • Throttle position senor • ECM

HINT:
After confirming DTC P0120, use the hand–held tester or OBD II scan tool to confirm the throttle valve opening percentage.

Throttle valve opening position expressed as percentage		Trouble Area
Throttle valve fully closed	Throttle valve fully open	
0 %	0 %	VC circuit open VTA circuit open or short
Approx. 100 %	Approx. 100 %	E2 circuit open

WIRING DIAGRAM

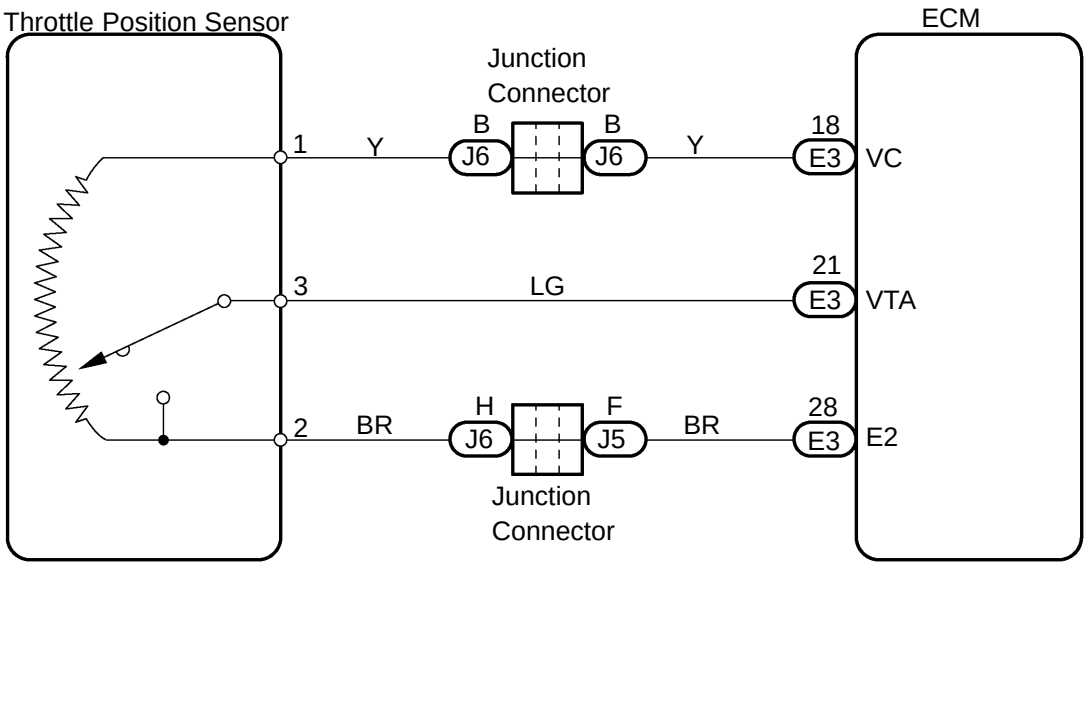

Y A66742

INSPECTION PROCEDURE

HINT:

- Read freed frame data using hand–held tester or OBD II scan tool. Because freeze frame records the engine conditions when the malfunction is detected, when troubleshooting it is useful for determining whether the vehicle was running or stopped, the engine warmed up or not, the air–fuel ratio lean or rich, etc. at the time of the malfunction.
- If DTC P0100 (Mass Air Flow Meter Circuit Malfunction), P0110 (Intake Air Temp. Circuit Malfunction), P0115 (Engine Coolant Temp. Circuit Malfunction), P0120 (Throttle/Pedal Position Sensor/Switch ”A” Malfunction) are output simultaneously, E1, E2 (Sensor Ground system) may be open.

1	READ VALUE OF OBD II SCAN TOOL OR HAND–HELD TESTER(THROTTLE VALVE OPENING PERCENTAGE)

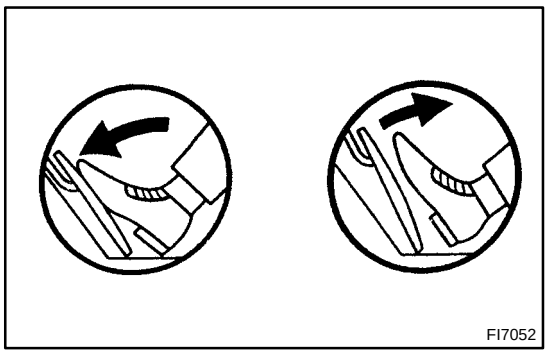

(a) Read the throttle valve opening percentage.

Result:

Throttle valve	Throttle valve opening position expressed as percentage
Fully open	Approx. 70 %
Fully closed	Approx. 10 %

OK → **CHECK FOR INTERMITTENT PROBLEMS**

NG

2	CHECK HARNESS AND CONNECTOR(CHECK VOLTAGE)

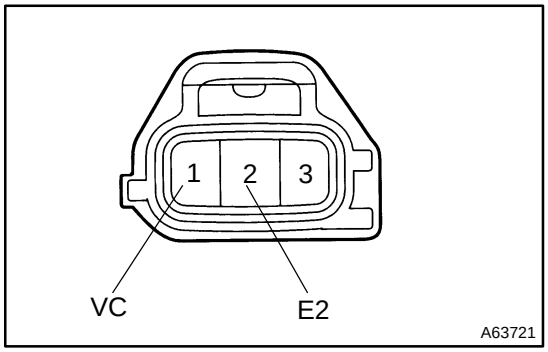

(a) Disconnect the throttle position sensor connector.
(b) Turn the ignition switch ON.
(c) Measure voltage between terminals VC and E2 of the throttle position sensor connector.
Voltage: 4.5 – 5.5 V

NG → **Go to step 6**

OK

3	INSPECT E.F.I. THROTTLE POSITION SENSOR

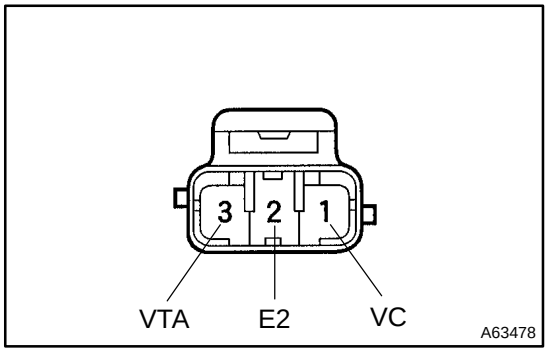

(a) Disconnect the throttle position sensor connector.
(b) Measure resistance between the terminals VC and E2 of the throttle position sensor.
(c) Measure resistance between the terminals VC and VTA of the throttle position sensor.

Resistance:

Terminals	Throttle valve	Resistance kΩ
1 – 2	—	2.5 – 5.9
1 – 3	Fully closed	0.2 – 5.7
1 – 3	Fully open	2.0 – 10.2

NG → **REPLACE E.F.I. THROTTLE POSITION SENSOR**

OK

4 INSPECT ECM(CHECK VOLTAGE)

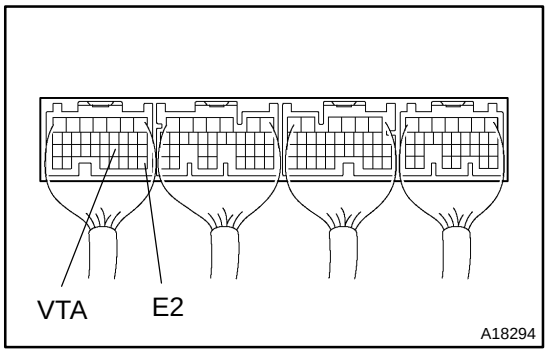

(a) Turn the ignition switch ON.
(b) Measure voltage between the terminals VTA and E2 of the ECM connector.

Voltage:

Throttle valve	Voltage V
Fully closed	0.3 – 1.0
Fully open	2.7 – 5.2

OK → **CHECK AND REPLACE ECM**

NG

5 CHECK HARNESS AND CONNECTOR(ECM–THROTTLE POSITION SENSOR)

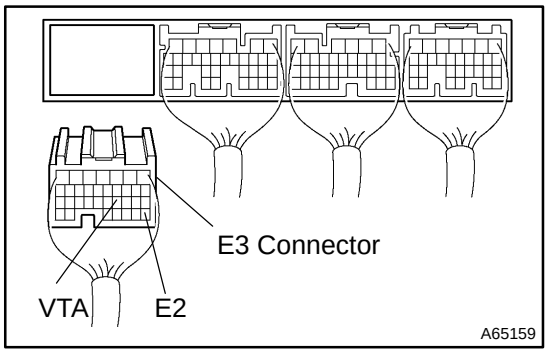

(a) Disconnect the throttle position sensor connector.
(b) Disconnect the ECM E3 connector.
(c) Check continuity between the terminals VTA of the ECM connector and VTA of the throttle position sensor connector.
Resistance:1 Ω or less
(d) Check for short between the terminals VTA and E2 of the ECM connector.
Resistance: 1 MΩ or more

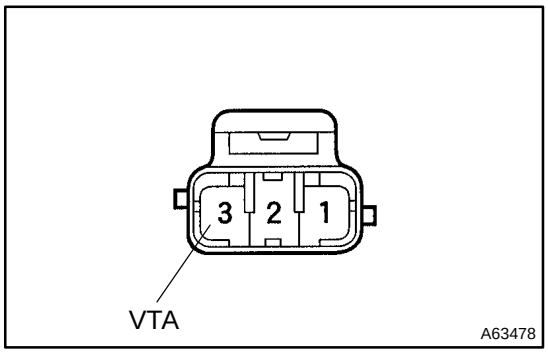

NG → **REPAIR OR REPLACE HARNESS AND CONNECTOR**

OK

CHECK AND REPLACE ECM

6	INSPECT ECM(CHECK VOLTAGE)

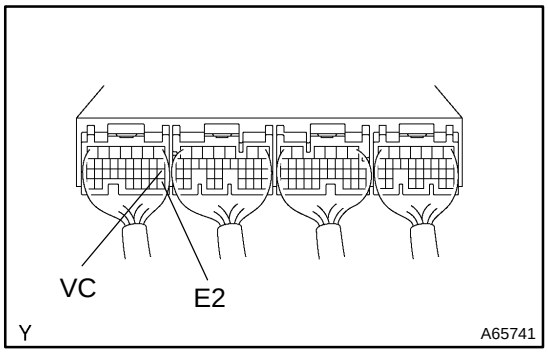

(a) Turn the ignition switch ON.
(b) Measure voltage between terminals VC and E2 of the ECM connector.
Voltage: 4.5 – 5.5 V

OK → **CHECK AND REPLACE ECM**

NG

7	CHECK HARNESS AND CONNECTOR(ECM–THROTTLE POSITION SENSOR)

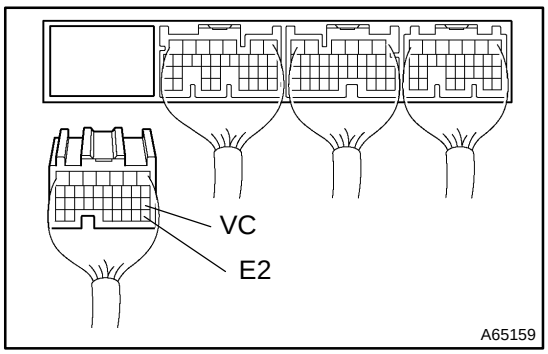

(a) Disconnect the throttle position sensor connector.
(b) Disconnect the ECM E3 connector.
(c) Check continuity between the terminals VC of the ECM connector and VC of the throttle position sensor connector.
Resistance: 1 Ω or less
(d) Check for short between the terminals VC and E2 of the ECM connector.
Resistance: 1 MΩ or more

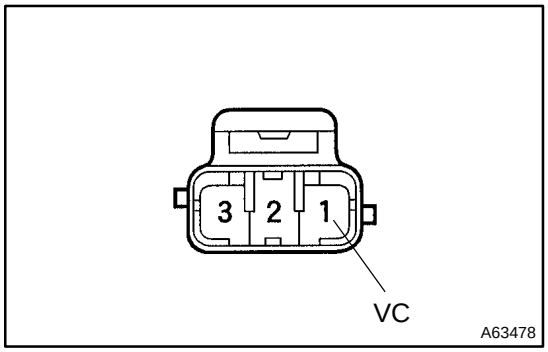

OK → **CHECK AND REPLACE ECM**

NG

REPAIR OR REPLACE HARNESS AND CONNECTOR

DTC	P0121	THROTTLE/PEDAL POSITION SENSOR/SWITCH ”A” CIRCUIT RANGE/PERFORMANCE PROBLEM

CIRCUIT DESCRIPTION

Refer to DTC P0120 on page 05–38.

DTC No.	DTC Detecting Condition	Trouble Area
P0121	After vehicle speed has been exceeded 30 km/h (19 mph) even once, output value of throttle position sensor is out of applicable range for vehicle speed is more than 0 km/h (0 mph). (2 trip detection logic)	• Throttle position sensor

INSPECTION PROCEDURE

HINT:

Read freeze frame data using the hand–held tester or OBD II scan tool, as freeze frame data records the engine conditions when the malfunction is detected. When troubleshooting, it is useful for determining whether the vehicle was running or stopped, the engine was warmed up or not, the air–fuel ratio was lean or rich, etc. at the time of the malfunction.

1	ARE THERE ANY DTC BEING OUTPUT(BESIDES P0121)

Result:

	A	B
RESULT	Only P0121 is output.	P0121 and other codes are output.

B → GO TO RELEVANT DTC CHART

A

REPLACE E.F.I. THROTTLE POSITION SENSOR

DTC	P0125	INSUFFICIENT COOLANT TEMP. FOR CLOSED LOOP FUEL CONTROL

CIRCUIT DESCRIPTION

To obtain a high purification rate of the CO, HC and NOx components of the exhaust gas, a three–way catalytic converter is used. For the most efficient use of the three–way catalytic converter, the air–fuel ratio must be precisely controlled so that it is always close to the stoichiometric air–fuel ratio.

The oxygen sensor has the characteristic that it provides output voltage* being approximately proportional to the existing air–fuel ratio. The oxygen sensor output voltage* is used to provide feedback for the ECM to control the air–fuel ratio.

By the oxygen sensor output, the ECM can determine the deviation amount from the stoichiometric air–fuel ratio and control the proper injection time immediately. If the oxygen sensor is out of order, ECM is unable to perform the accurate air–fuel ratio control.

The oxygen sensor is equipped with a heater which heats the zirconia element. The heater is controlled by the ECM. When the intake air volume is low (the temperature of the exhaust gas is low), the current flows to the heater to heat the sensor for the accurate oxygen concentration detection.

*: The voltage value changes at the inside of the ECM only.

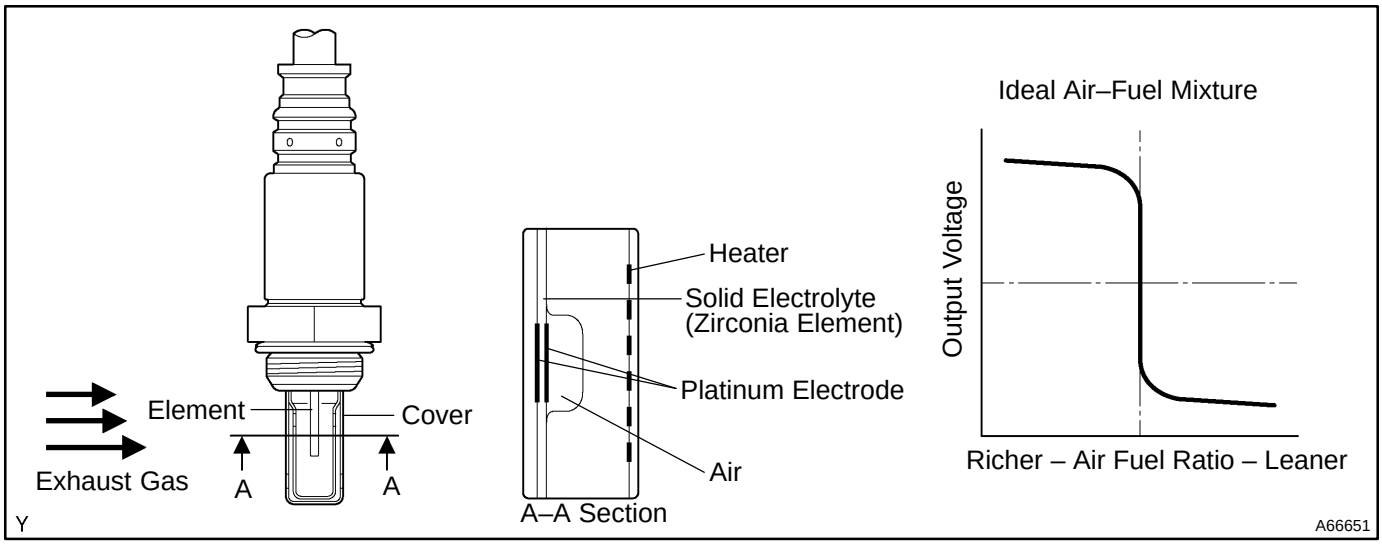

DTC No	DTC Detecting Condition	Trouble Area
P0125	After engine is warmed up, oxygen sensor output* does not change when conditions (a), (b), (c) and (d) continue for at least 1.5 min: *: Output value changes at inside of the ECM only (a) Engine speed: 1,500 rpm or more (b) Vehicle speed: 40 – 100 km/h (25 – 62 mph) (c) Throttle valve is not fully closed (d) 140 sec. or more after starting engine	• PCV hose • Open or short in oxygen sensor circuit • Oxygen sensor • Air induction system • Fuel pressure • Injector • Gas leak on exhaust system • ECM

HINT:

After confirming DTC P0125, use the hand–held tester or OBD II scan tool to confirm output voltage of the oxygen sensor from the CURRENT DATA.

WIRING DIAGRAM

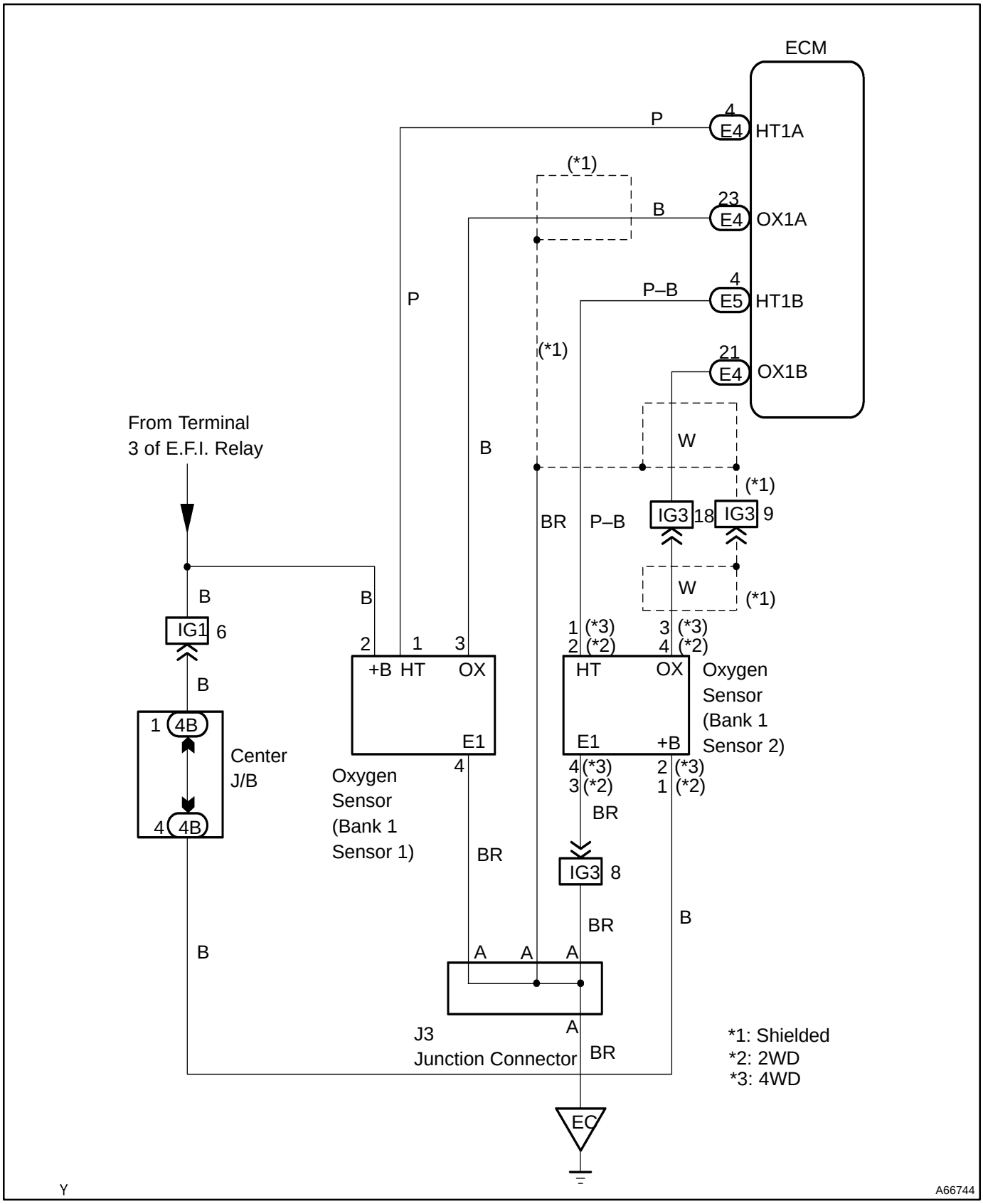

INSPECTION PROCEDURE

HINT:

Read freeze frame data using the hand–held tester or OBD II scan tool. Because freeze frame data records the engine conditions when the malfunction is detected. When troubleshooting, it is useful for determining whether the vehicle was running or stopped, the engine was warmed up or not, the air–fuel ratio was lean or rich, etc. at the time of the malfunction.

1	READ OUTPUT DTC(BESIDES P0125)

Result:

	A	B
RESULT	Only P0125 is output.	P0125 and other codes are output.

HINT:

If any other cord besides P0125 are output, perform the troubleshoot on that DTC before.

B → **GO TO RELEVANT DTC CHART**

A

2	READ VALUE OF OBD II SCAN TOOL OR HAND–HELD TESTER(OUTPUT VOLTAGE OF OXYGEN SENSOR)

(a) Warm up the oxygen sensor with the engine speed at 2,500 rpm for approx. 90 sec.

(b) Use the hand–held tester or OBD II scan tool to read the output voltage of the oxygen sensor during idling.

Oxygen sensor output voltage:

Alternates repeatedly between less than 0.4 V and more than 0.55 V (See the following table)

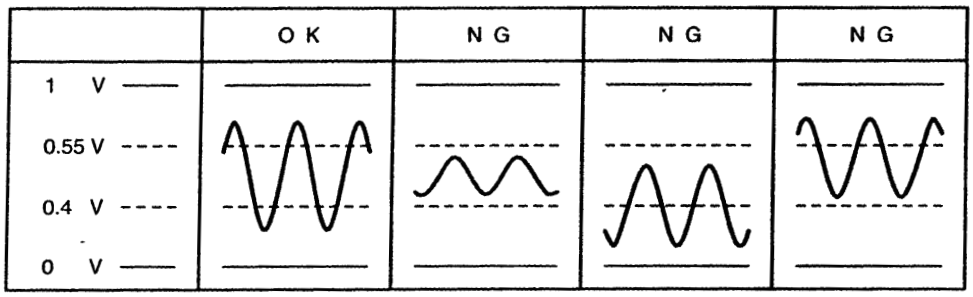

P18349

OK → **Go to step 10**

NG

3	CHECK CONNECTION OF PCV HOSE

NG → **REPAIR OR REPLACE PCV HOSE**

OK

4	CHECK WIRE HARNESS OR CONNECTOR(ECM–OXYGEN SENSOR)

NG → REPAIR OR REPLACE WIRE HARNESS OR CONNECTOR

OK

5	INSPECT OXYGEN SENSOR(OXYGEN SENSOR HEATER RESISTANCE)

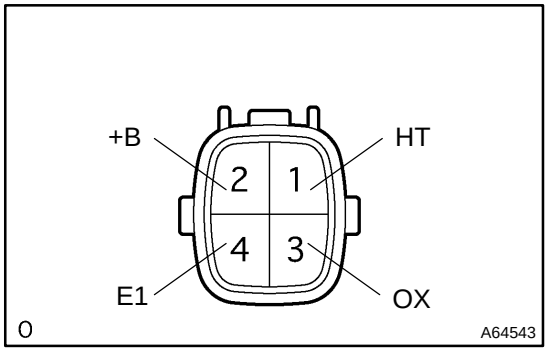

(a) Disconnect the oxygen sensor connector.
(b) Measure resistance between the terminals HT and +B of the oxygen sensor.
Resistance: 5 – 10 Ω (20°C)

NG → REPLACE OXYGEN SENSOR

OK

6	CHECK AIR INDUCTION SYSTEM (See page 12–1)

NG → REPAIR OR REPLACE AIR INDUCTION SYSTEM

OK

7	CHECK FUEL PRESSURE (See page 11–5)

NG → REPAIR OR REPLACE FUEL SYSTEM

OK

8	INSPECT FUEL INJECTOR ASSY (See page 11–7)

NG → REPLACE FUEL INJECTOR ASSY

OK

9	CHECK EXHAUST GAS LEAK

NG → REPAIR OR REPLACE EXHAUST GAS LEAKAGE POINT

OK

REPLACE OXYGEN SENSOR

10	PERFORM CONFIRMATION DRIVING PATTERN

GO

11	READ OUTPUT DTC(BESIDES P0125)

Result:

	A	B
RESULT	P0125 is not output.	P0125 is output.

B → CHECK FOR INTERMITTENT PROBLEMS

A

12	CONFIRM VEHICLE RUNS OUT OF FUEL IN THE PAST

NO → CHECK AND REPLACE ECM

YES

DTC IS CAUSED RUNNING OUT OF FUEL

DTC	P0128	THERMOSTAT MALFUNCTION

CIRCUIT DESCRIPTION

An Engine Coolant Temperature (ECT) sensor monitors the temperature of the coolant. This input is used by the Engine Control Module (ECM) for engine control and as enabling criteria for some diagnostics.
The airflow coming into the engine is accumulated and used to determine if the engine has been driven within conditions that would allow the engine coolant to heat up normally to the thermostat regulating temperature. If the coolant temperature dose not increase normally or does not reach regulating temperature of the thermostat, diagnostics that use the engine coolant temperature as enabling criteria, may not when expected. If engine coolant fails to reach a preset target temperature before a calculated airflow is accumulated, DTC P0128 will be set.

VEHICLE RESPONSE TO DTC SET

The ECM illuminates the malfunction indicator lamp (MIL) on the second consecutive ignition cycle that the diagnostic runs and fails.
The ECM records the operating first time the diagnostic fails, the ECM stores this information in the failure records. If the diagnostic reports a failure on the second consecutive ignition cycle, the ECM records the operating conditions at the time of the failure. The ECM writes the operating conditions to the Freeze Frame and updates the failure records.

CONDITIONS FOR CLEARING THE MIL/DTC

The MIL turns off after 3 consecutively passing trips without a fault. A history DTC clears after 40 consecutive warm–up cycles without a fault.

DTC No.	DTC Detection condition	Trouble Area
P0128	Conditions for running the DTC: • The ECT is between –10˚C (14˚F) and 35˚C (95˚F) • The IAT is between –10˚C (14˚F) and 35˚C (95˚F) • Difference between ECT and IAT is between –15˚C (5˚F) and 7˚C (13˚F) Conditions for setting the DTC: The Engine Coolant Temperature failed to reach at least 75˚C (167˚F) during the running of the coolant temperature counter diagnostic. (2 trip detection logic)	• Thermostat • Cooling fan operation • Cooling system • ECM

INSPECTION PROCEDURE

- If DTC P0115 or P0116 is output, first troubleshoot DTC P0115 or P0116. If no malfunction is detected, troubleshoot DTC P0128 next.
- Read freeze frame data using TOYOTA hand–held tester or OBD II scan tool. Because freeze frame records the engine conditions when the malfunction is detected. When troubleshooting, it is useful for determining whether the vehicle was running or stopped, the engine was warmed up or not, the air–fuel ratio was lean or rich, etc. at the time of the malfunction.

1	CHECK COOLING FAN SYSTEM (See page16–4)

NG → REPAIR OR REPLACE COOLING FAN SYSTEM

OK

2	CHECK THERMOSTAT(See page16–2)	

NG → REPLACE THERMOSTAT

OK

CHECK AND REPLACE ECM

DTC	P0130	HEATED OXYGEN SENSOR CIRCUIT MALFUNCTION (BANK 1 SENSOR 1)

CIRCUIT DESCRIPTION

Refer to DTC P0125 on page 05–44.

DTC No	DTC Detecting Condition	Trouble Area
P0130	Voltage output of oxygen sensor remains at 0.4 V or more, or 0.55 V or less, during idling after engine is warmed up (2 trip detection logic)	• Open or short in oxygen sensor circuit • Oxygen sensor • Air induction system • Fuel pressure • Injector • ECM

HINT:

- Bank 1 refers to bank that includes cylinder No. 1.
- Sensor 1 refers to the sensor closer to the engine body.
- The oxygen sensor's output voltage and the short−term fuel trim value can be read using the hand−held tester or OBD II scan tool.

WIRING DIAGRAM

Refer to DTC P0125 on page 05–44.

CONFIRMATION DRIVING PATTERN

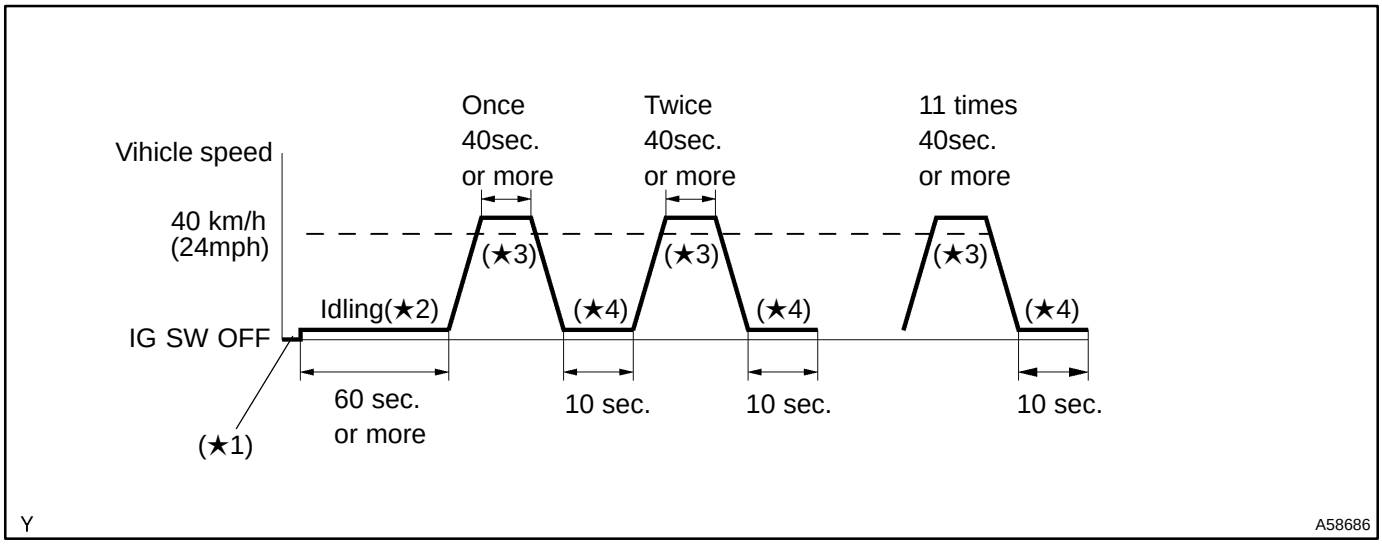

1. **Connect the hand–held tester or OBD II scan tool to the DLC3.**
2. **Switch the hand–held tester or OBD II scan tool from the normal mode to the check (test) mode (See page 05–5). (★1)**
3. **Start the engine and let the engine idle for 60 seconds or more. (★2)**
4. **Drive the vehicle at 40 km/h (24 mph) or more for 40 seconds or more. (★3)**
5. **Let the engine idle for 10 seconds or more. (★4)**
6. **Preform steps (★3) to (★4) 11 times. (★5)**

HINT:

If a malfunction exists, the MIL will light up on the multi information display during step (★5).

NOTICE:

If the conditions in this test are not strictly followed, detection of the malfunction will not be possible. If you do not have a hand–held tester, turn the ignition switch OFF after performing steps from (★2) to (★5), then perform steps from (★2) to (★5) again.

INSPECTION PROCEDURE

HINT:

Read freeze frame data using the hand–held tester or OBD II scan tool, as freeze frame data records the engine conditions when the malfunction is detected. When troubleshooting, it is useful for determining whether the vehicle was running or stopped, the engine was warmed up or not, the air–fuel ratio was lean or rich, etc. at the time of the malfunction.

1	READ OUTPUT DTC(BESIDES P0130)

Result:

	A	B
RESULT	P0130 are output.	P0130 other codes are output.

B → GO TO RELEVANT DTC CHART

A

2	READ VALUE OF HAND–HELD TESTER(OUTPUT VOLTAGE OXYGEN SENSOR)

(a) Warm up the oxygen sensor with the engine speed at 2,500 rpm for approx. 90 sec.
(b) Use the hand–held tester or OBD II scan tool to read the output voltage of the oxygen sensor during idling.

Oxygen sensor output voltage:
Alternates repeatedly between less than 0.4 V and more than 0.55 V (See the following table)

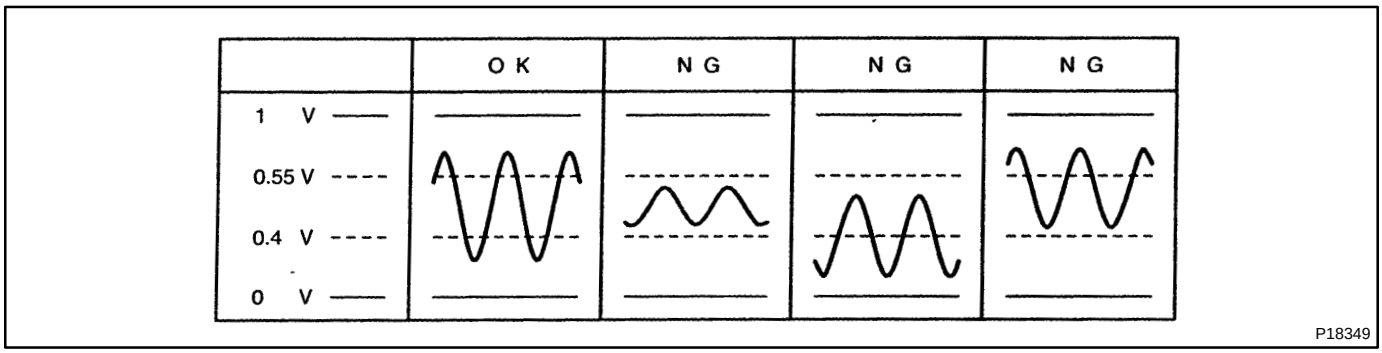

OK → **Go to step 9**

NG

3	CHECK HARNESS AND CONNECTOR(ECM–OXYGEN SENSOR)

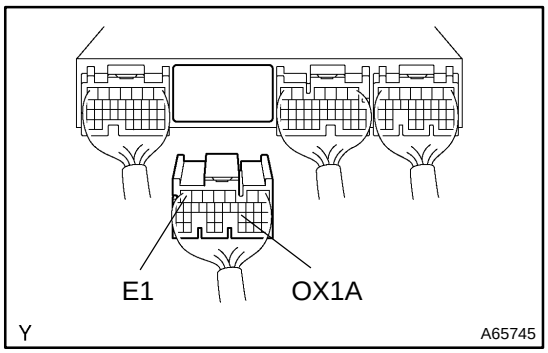

(a) Disconnect the oxygen sensor connector.
(b) Disconnect the ECM E4 connector.
(c) Check continuity between the terminals OX1A of the ECM connector and OX of the oxygen sensor connector.
Resistance: 1 Ω or less

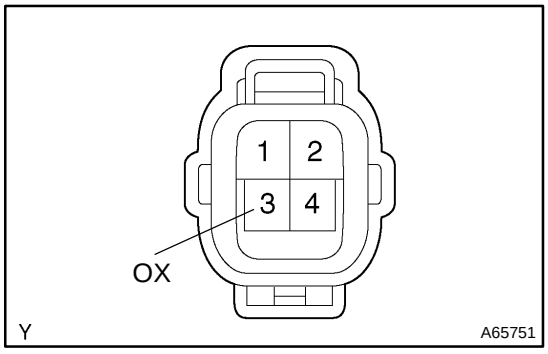

(d) Check for short between the terminals OX1A and E1 of the ECM connector.
Resistance: 1 MΩ or more

NG → **REPAIR OR REPLACE HARNESS AND CONNECTOR**

OK

4	CHECK WHETHER MISFIRE IS OCCURRED OR NOT BY MONITORING DTC AND DATA LIST (See page 05–5)

NG → CHECK FOR SPARK AND IGNITION

OK

5	CHECK AIR INDUCTION SYSTEM (See page 12–1)

NG → REPAIR OR REPLACE AIR INDUCTION SYSTEM

OK

6	CHECK FUEL PRESSURE (See page 11–5)

NG → REPAIR OR REPLACE FUEL SYSTEM

OK

7	CHECK FUEL INJECTOR ASSY (See page 11–7)

NG → REPLACE FUEL INJECTOR ASSY

OK

8	CHECK EXHAUST GAS LEAK

(a) Clear the DTC.
(b) Warm up the oxygen sensor by a driving test to check the system.
HINT:
Refer to CONFIRMATION DRIVING PATTERN.

NG → REPAIR OR REPLACE EXHAUST GAS LEAKAGE POINT

OK

REPLACE OXYGEN SENSOR

9	PERFORM CONFIRMATION DRIVING PATTERN

(a) Clear the DTC.
(b) Warm up the oxygen sensor by a driving test to check the system.
HINT:
Refer to CONFIRMATION DRIVING PATTERN.

GO

10	READ OUTPUT DTC(BESIDS P0130)

SST 09843–18040

Result:

	A	B
RESULT	P0130 are output again.	P0130 other codes are not output again.

B → **CHECK AND REPLACE ECM**

A

11	CONFIRM VEHICLE RUNS OUT OF FUEL IN THE PAST

(a) Confirm if the vehicle ran out of fuel or not in the past.

HINT:

There is no problem, if DTC P0130 is not output after the CONFIRMATION DRIVING PATTERN. This means that the ECM records DTC P0130 because of the running out of fuel in the past.

NO → **CHECK FOR INTERMITTENT PROBLEMS**

YES

DTC IS CAUSED RUNNING OUT OF FUEL

DTC	P0133	HEATED OXYGEN SENSOR SLOW RESPONSE (BANK 1 SENSOR 1)

CIRCUIT DESCRIPTION

Refer to DTC P0125 on page 05–44.

DTC No	DTC Detecting Condition	Trouble Area
P0133	Response time for oxygen sensor's voltage output to change from rich to lean, or from lean to rich, is 1.0 sec. or more during idling after engine is warmed up (2 trip detection logic)	• Open or short in oxygen sensor circuit • Oxygen sensor • Air induction system • Fuel pressure • Injector • ECM

HINT:

- Bank 1 refers to bank that includes cylinder No. 1.
- Sensor 1 refers to the sensor closer to the engine body.
- The oxygen sensor's output voltage and the short−term fuel trim value can be read using the hand−held tester or OBD II scan tool.

WIRING DIAGRAM

Refer to DTC P0125 on page 05–44.

INSPECTION PROCEDURE

HINT:

Read freeze frame data using hand–held tester or OBD II scan tool. Because freeze frame records the engine conditions when the malfunction is detected, when troubleshooting it is useful for determining whether the vehicle was running or stopped, the engine warmed up or not, the air–fuel ratio lean or rich, etc. at the time of the malfunction.

1	READ OUTPUT DTC(BESIDES P0133)

Result:

	A	B
RESULT	P0133 is output.	P0133 and other codes are output.

B → GO TO RELEVANT DTC CHART

A

2	READ VALUE OF HAND–HELD TESTER(OUTPUT VOLTAGE OXYGEN SENSOR)

(a) Warm up the oxygen sensor with the engine speed at 2,500 rpm for approx. 90 sec.
(b) Use the hand–held tester or OBD II scan tool to read the output voltage of the oxygen sensor during idling.

Oxygen sensor output voltage:
Alternates repeatedly between less than 0.4 V and more than 0.55 V (See the following table)

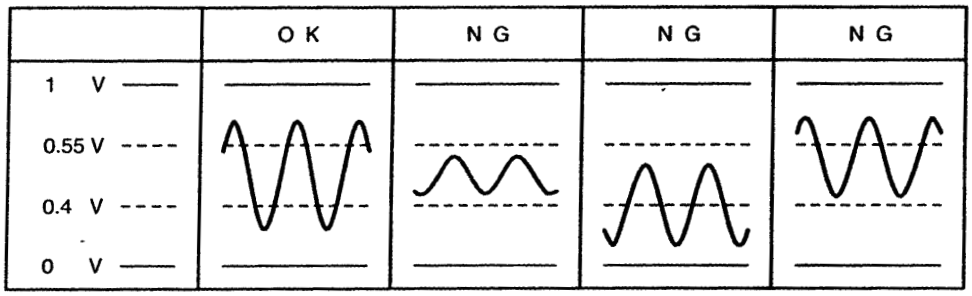

OK → **Go to step 9**

NG

3	CHECK HARNESS AND CONNECTOR(ECM–OXYGEN SENSOR)

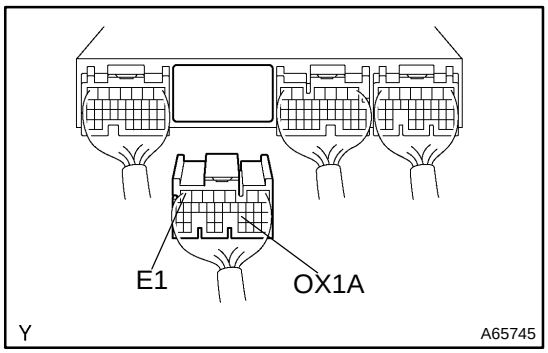

(a) Disconnect the oxygen sensor connector.
(b) Disconnect the ECM E4 connector.
(c) Check continuity between the terminals OX1A of the ECM connector and OX of the oxygen sensor connector.
Resistance: 1 Ω or less

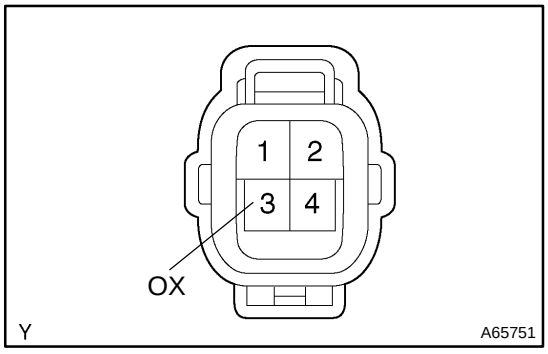

(d) Check for short between the terminals OX1A and E1 of the ECM connector.
Resistance: 1 MΩ or more

NG → **REPAIR OR REPLACE HARNESS AND CONNECTOR**

OK

4	CHECK WHETHER MISFIRE IS OCCURRED OR NOT BY MONITORING DTC AND DATA LIST (See page 05–5)

NG → CHECK FOR SPARK AND IGNITION

OK

5	CHECK AIR INDUCTION SYSTEM (See page 12–1)

NG → REPAIR OR REPLACE AIR INDUCTION SYSTEM

OK

6	CHECK FUEL PRESSURE (See page 11–5)

NG → REPAIR OR REPLACE FUEL SYSTEM

OK

7	CHECK FUEL INJECTOR ASSY (See page 11–7)

NG → REPLACE FUEL INJECTOR ASSY

OK

8	CHECK EXHAUST GAS LEAK

(a) Clear the DTC.
(b) Warm up the oxygen sensor by a driving test to check the system.
HINT:
Refer to CONFIRMATION DRIVING PATTERN.

NG → REPAIR OR REPLACE EXHAUST GAS LEAKAGE POINT

OK

REPLACE OXYGEN SENSOR

9	PERFORM CONFIRMATION DRIVING PATTERN

(a) Clear the DTC.
(b) Warm up the oxygen sensor by a driving test to check the system.
HINT:
Refer to CONFIRMATION DRIVING PATTERN.

GO

10	READ OUTPUT DTC(BESIDS P0133)

Result:

	A	B
RESULT	P0133 is not output again.	P0133 is not output again.

B → CHECK AND REPLACE ECM

A

11	CONFIRM VEHICLE RUNS OUT OF FUEL IN THE PAST

(a) Confirm if the vehicle ran out of fuel or not in the past.

HINT:

There is no problem, if DTC P0133 is not output after the CONFIRMATION DRIVING PATTERN. This means that the ECM records DTC P0133 because of the running out of fuel in the past.

NO → CHECK FOR INTERMITTENT PROBLEMS

YES

DTC IS CAUSED RUNNING OUT OF FUEL

DTC	P0135	HEATED OXYGEN SENSOR HEATER CIRCUIT MALFUNCTION (BANK 1 SENSOR 1)

DTC	P0141	HEATED OXYGEN SENSOR HEATER CIRCUIT MALFUNCTION (BANK 1 SENSOR 2)

CIRCUIT DESCRIPTION

Refer to DTC P0125 on page 05–44.

DTC No	DTC Detecting Condition	Trouble Area
P0135 P0141	When heater operates, heater current exceeds 2 A (2 trip detection logic)	• Open or short in heater circuit of heated oxygen sensor • Heated oxygen sensor heater • ECM
	Heater current of 0.2 A or less when heater operates (2 trip detection logic)	

HINT:

- Bank 1 refers to the bank that includes cylinder No. 1.
- Sensor 2 refers to the sensor being farther from the engine body.

WIRING DIAGRAM

Refer to DTC P0125 on page 05–44.

INSPECTION PROCEDURE

HINT:

Read freeze frame data using hand–held tester or OBD II scan tool. Because freeze frame records the engine conditions when the malfunction is detected, when troubleshooting it is useful for determining whether the vehicle was running or stopped, the engine warmed up or not, the air–fuel ratio lean or rich, etc. at the time of the malfunction.

1	INSPECT ECM(CHECK VOLTAGE)

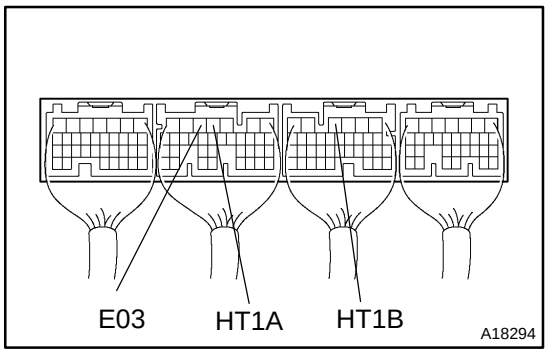

(a) Turn the ignition switch ON.
(b) Measure voltage between the terminals HT1A and E03 of the ECM connector.
Voltage: 9 – 14 V
(c) Measure voltage between the terminals HT1B and E03 of the ECM connector.
Voltage: 9 – 14 V

OK → **CHECK AND REPLACE ECM**

NG

2 CHECK OXYGEN SENSOR(OXYGEN SENSOR HEATER)

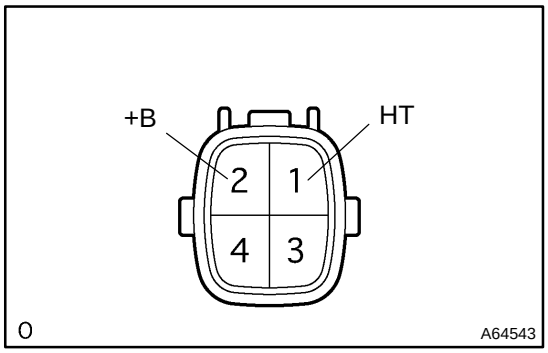

(a) Disconnect the oxygen sensor connector.
(b) Measure resistance between the terminals HT and +B of the oxygen sensor.
Resistance:
Bank1 Sensor1 at 20°C (68°F) 5 – 16 Ω
Bank1 Sensor2 at 20°C (68°F) 11 – 16 Ω

NG → **REPLACE OXYGEN SENSOR**

OK

3 CHECK HARNESS AND CONNECTOR(ECM–OXYGEN SENSOR)

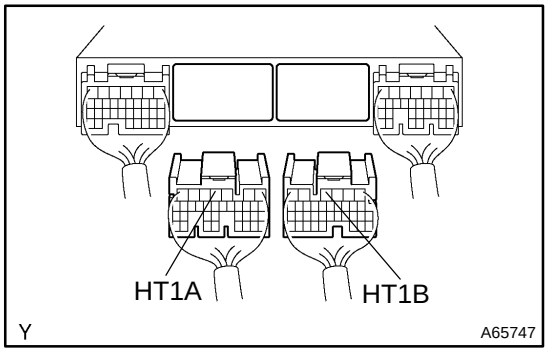

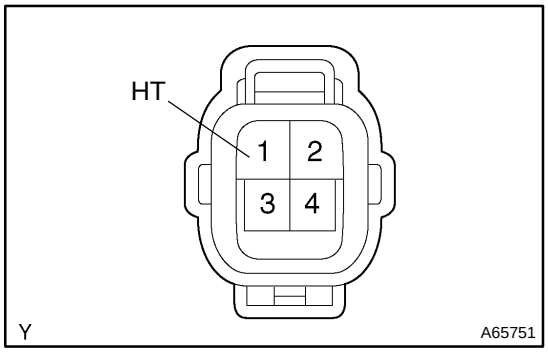

(a) Disconnect the oxygen sensor connector.
(b) Disconnect the ECM E4 and E5 connector.
(c) Check continuity between the terminals HT of the oxygen sensor (Bank 1 sensor 1) and HT1A of the ECM connector.
Resistance: 1 Ω or less
(d) Check for short between the terminals HT1A and E03 of the ECM connector.
Resistance: 1 MΩ or more
(e) Check continuity between the terminals HT of the oxygen sensor (Bank 1 sensor 2) and HT1B of the ECM connector.
Resistance: 1 Ω or less
(f) Check for short between the terminals HT1B and E03 of the ECM connector.
Resistance: 1 MΩ or more

NG → **REPAIR OR REPLACE HARNESS AND CONNECTOR**

OK

4 CHECK CHECK FOR ECM POWER SOURCE CIRCUIT (See page 05–148)

NG → **REPAIR OR REPLACE CHECK FOR ECM POWER SOURCE CIRCUIT**

OK

5	CHECK HARNESS AND CONNECTOR(E.F.I. RELAY–OXYGEN SENSOR)

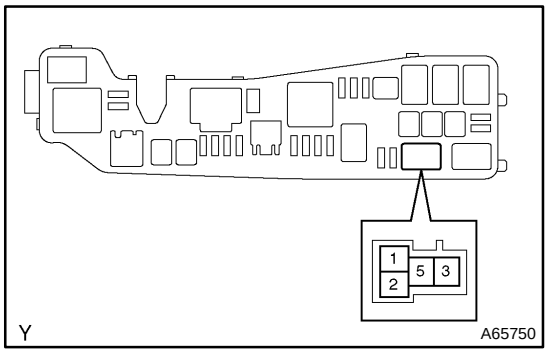

(a) Disconnect the battery negative (–) terminal.
(b) Disconnect the oxygen sensor connector.
(c) Check continuity between the terminals 5 of the E.F.I. relay side connector and +B of the oxygen sensor connector.
Resistance: 1 Ω or less

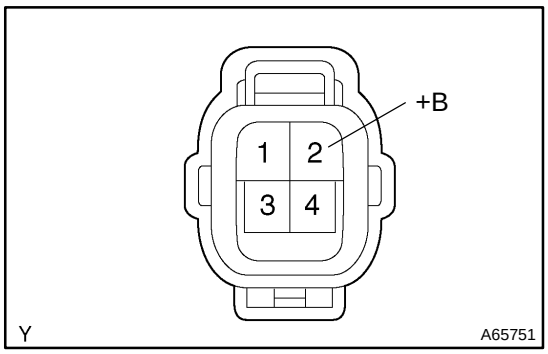

NG → **REPAIR OR REPLACE HARNESS AND CONNECTOR**

OK

CHECK AND REPLACE ECM

DTC	P0136	OXYGEN SENSOR CIRCUIT MALFUNCTION (BANK 1 SENSOR 2)

CIRCUIT DESCRIPTION

Refer to DTC P0125 on page 05–44

DTC No.	DTC Detecting Condition	Trouble Area
P0136	Voltage output of heated oxygen sensor remains at 0.4 V or more, or 0.5 V or less when vehicle is driven at 40 km/h (25 mph) or more after engine is warmed up (2 trip detection logic)	• Open or short in heated oxygen sensor circuit • Heated oxygen sensor

HINT:

- Bank 1 refers to the bank that includes cylinder No.1.
- Sensor 2 refers to the farther seneor from the engine body.

WIRING DIAGRAM

Refer to DTC P0125 on page 05–44

INSPECTION PROCEDURE

HINT:

Read freeze frame data using hand – held tester or OBD II scan tool, as freeze frame data records the engine conditions when a malfunction is detected. When troubleshooting, it is useful for determining whether the vehicle was running or stopped, the engine was warmed up or not, the air–fuel ratio was lean or rich, etc. at the time of the malfunction.

1	READ OUTPUT DTC(BESIDE P0136)

YES → GO TO RELEVANT DTC CHART

ON

2	CHECK HARNESS AND CONNECTOR(ECM–OXYGEN SENSOR)

NG → REPAIR OR REPLACE HARNESS AND CONNECTOR

OK

3	READ VALUE OF HAND–HELD TESTER(OUTPUT VOLTAGE OXYGEN SENSOR)

(a) Connect the hand – held tester or OBD II scan tool to the DLC3.
(b) Warm up the engine to normal operating temperature.
(c) Read the voltage output of the heated oxygen sensor when engine is suddenly raced.

HINT:

Perform a quick racing to 4,000 rpm 3 times using the accelerator pedal.

Heated oxygen sensor output voltage: Alternates from 0.4 V or less to 0.5 V or more.

OK → CHECK THAT EACH CONNECTOR IS PROPERLY CONNECTED

NG

REPLACE SENSOR, OXYGEN

DTC	P0171	SYSTEM TOO LEAN (FUEL TRIM) (BANK 1)

DTC	P0172	SYSTEM TOO RICH (FUEL TRIM) (BANK 1)

CIRCUIT DESCRIPTION

Fuel trim refers to the feedback compensation value compared against the basic injection time. Fuel trim includes short–term fuel trim and long–term fuel trim.
Short–term fuel trim is the short–term fuel compensation used to maintain the air–fuel ratio at its ideal theoretical value. The signal from the heated oxygen sensor indicates whether the air–fuel ratio is RICH or LEAN compared to the ideal theoretical value, triggering a reduction in fuel volume if the air–fuel ratio is rich, and an increase in fuel volume if it is lean.
Long–term fuel trim is overall fuel compensation carried out long–term to compensate for continual deviation of the short–term fuel trim form the central value due to individual engine differences, wear over time and changes in the usage environment.
If both the short–term fuel trim and long–term fuel trim are LEAN or RICH beyond a certain value, it is detected as a malfunction and the check engine warning (CHK ENG) lights up.

DTC No.	DTC Detecting Condition	Trouble Area
P0171	When the air–fuel ratio feedback is stable after engine warming up, the fuel trim is considerably in error on the RICH side (2 trip detection logic)	• PCV hose • Air induction system • Infector blockage • Mass air flow meter • Engine coolant temp. sensor • Fuel pressure • Gas leakage on exhaust system • Open or short in heated oxygen sensor circuit • Heated oxygen sensor • ECM
P0172	When the air–fuel ratio feedback is stable after engine warming up, the fuel trim is considerably in error on the LEAN side. (2 trip detection logic)	• Injector leak, blockage • Mass air flow meter • Engine coolant temp. sensor • Ignition system • Fuel pressure • Gas leakage on exhaust system • Open or short in heated oxygen sensor circuit • Heated oxygen sensor • ECM

HINT:
If the total of the short–term fuel trim value and long–term fuel trim value is within ± 25 %, the system is functioning normally.

WIRING DIAGRAM

Refer to DTC P0125 on page 05–44.

INSPECTION PROCEDURE

HINT:
Read freed frame data using hand–held tester or OBD II scan tool. Because freeze frame records the engine conditions when the malfunction is detected, when troubleshooting it is useful for determining whether the vehicle was running or stopped, the engine warmed up or not, the air–fuel ratio lean or rich, etc. at the time of the malfunction.

1	CHECK AIR INDUCTION SYSTEM (See page 12–1)

NG → REPAIR OR REPLACE AIR INDUCTION SYSTEM

OK

2	CHECK CONNECTION OF PCV HOSE

NG → REPAIR OR REPLACE PCV HOSE

OK

3	CHECK FUEL INJECTOR ASSY (See page 11–7)

NG → REPLACE FUEL INJECTOR ASSY

OK

4	CHECK E.F.I. ENGINE COOLANT TEMPERATURE SENSOR (See page 10–2)

NG → REPAIR OR REPLACE E.F.I. ENGINE COOLANT TEMPERATURE SENSOR

OK

5	CHECK FOR SPARK AND IGNITION (See page 18–1)

NG → REPAIR OR REPLACE IGNITION SYSTEM

OK

6	CHECK FUEL PRESSURE (See page 11–5)

NG → REPAIR OR REPLACE FUEL SYSTEM

OK

7	CHECK EXHAUST GAS LEAKAGE POINT

NG → REPAIR OR REPLACE EXHAUST GAS LEAKAGE POINT

OK

8	READ VALUE OF OBD II SCAN TOOL OR HAND–HELD TESTER(OUTPUT VOLTAGE OF OXYGEN SENSOR)

(a) Warm up the oxygen sensor with the engine speed at 2,500 rpm for approx. 90 sec.
(b) Use the hand–held tester or OBD II scan tool to read the output voltage of the oxygen sensor during idling.

Oxgen sensor otput voltage:
Alternates repeatedly between less than 0.4 V and more than 0.55 V (See the following table)

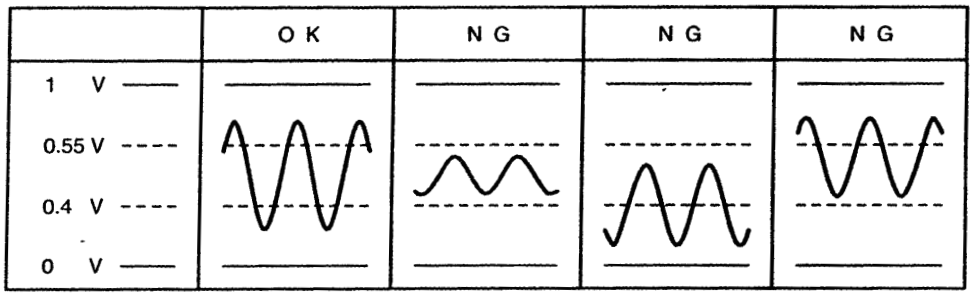

P18349

OK	Go to step 10

NG

9	CHECK HARNESS AND CONNECTOR(ECM–OXYGEN SENSOR)

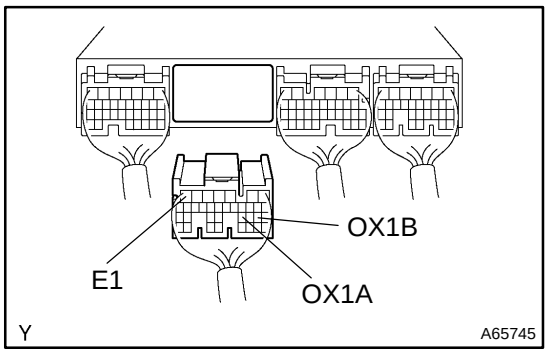

Y A65745

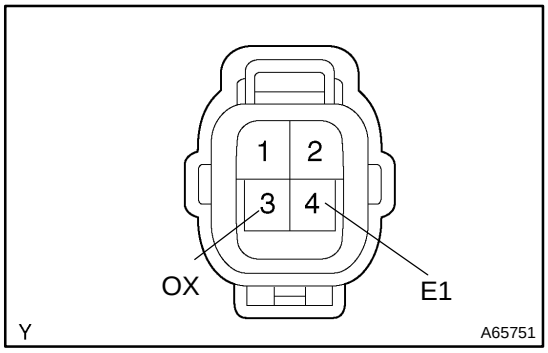

Y A65751

(a) Disconnect the oxygen sensor connector.
(b) Disconnect the ECM E4 connector.
(c) Check continuity between the terminals OX1A of the ECM connector and OX of the oxygen sensor connector.
Resistance: 1 Ω or less
(d) Check continuity between the terminals E1 of the ECM connector and the E1 of the oxygen sensor connector.
Resistance: 1 Ω or less
(e) Check for short between the terminals OX1A and E1 of the ECM connector.
Resistance: 1 MΩ or more
(f) Check continuity between the terminals OX1B of the ECM connector and OX of the oxygen sensor connector.
Resistance: 1 Ω or less
(g) Check continuity between the terminals E1 of the ECM connector and the E1 of the oxygen sensor connector.
Resistance: 1 Ω or less
(h) Check for short between the terminals OX1B and E1 of the ECM connector.
Resistance: 1 MΩ or more

NG	REPAIR OR REPLACE HARNESS AND CONNECTOR

OK

REPLACE OXYGEN SENSOR

10	PERFORM CONFIRMATION DRIVING PATTERN

GO

11	READ OUTPUT DTC(BESIDES P0171 OR P0172)

Result:

	A	B
RESULT	P0171 and P0172 are not output.	P0171 and P0172 are output again.

B → CHECK AND REPLACE ECM

A

12	CONFIRM VEHICLE RUNS OUT OF FUEL IN THE PAST

NO → CHECK FOR INTERMITTENT PROBLEMS

YES

DTC P0171 IS CAUSED BY RUNNING OUT OF FUEL

DTC	P0300	RANDOM/MULTIPLE CYLINDER MISFIRE DETECTED

DTC	P0301	CYLINDER 1 MISFIRE DETECTED

DTC	P0302	CYLINDER 2 MISFIRE DETECTED

DTC	P0303	CYLINDER 3 MISFIRE DETECTED

DTC	P0304	CYLINDER 4 MISFIRE DETECTED

CIRCUIT DESCRIPTION

Misfire: The ECM uses the crankshaft position sensor and camshaft position sensor to monitor changes in the crankshaft rotation for each cylinder.

The ECM counts the number of times the engine speed change rate, indicating that misfire has occurred. And when the misfire rate equals to or exceeds the count indicating that the engine condition has deteriorated, the MIL lights up.

If the misfire rate is high enough and the driving conditions will cause catalyst to overheating, the MIL blinks when misfire occurs.

DTC No.	DTC Detecting Condition	Trouble Area
P0300	Misfire of random cylinders is detected during any particular 200 or 1,000 revolutions	• Open or short in engine wire • Connector connection • Vacuum hose connection • PCV hose • Ignition system • Injector • Fuel pressure • Mass air flow meter • Engine coolant temp. sensor • Compression pressure • Valve clearance • Valve timing • ECM
P0301 P0302 P0303 P0304	For any particular 200 revolutions for engine, misfiring is detected which can cause catalyst overheating (This causes MIL to blink)	
	For any particular 1,000 revolutions of engine, misfiring is detected which causes a deterioration in emissions (2 trip detection logic)	

HINT:

When the 2 or more codes for a misfiring cylinder are recorded repeatedly but no random misfire code is recorded, it indicates that the misfires were detected and recorded at different times.

WIRING DIAGRAM

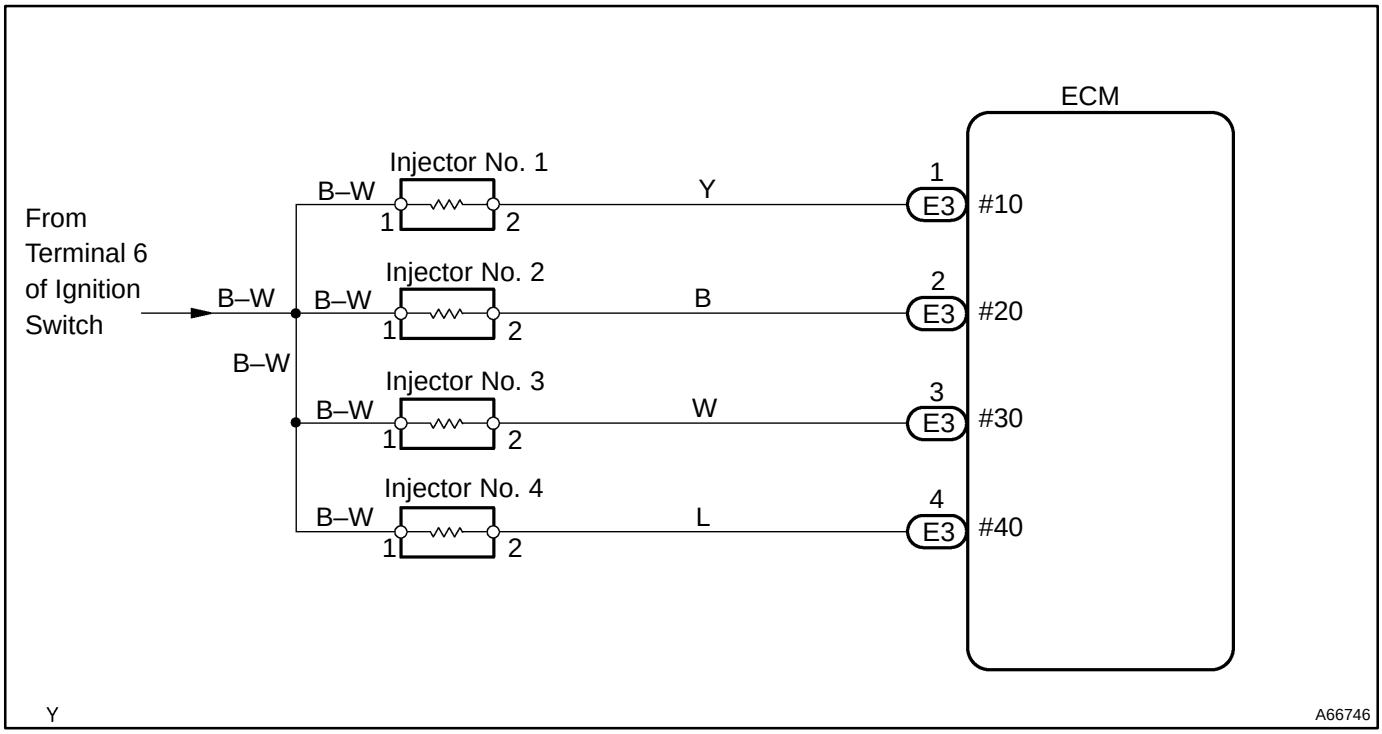

CONFIRMATION DRIVING PATTERN

(a) Connect the hand–held tester or OBD II scan tool to the DLC3.
(b) Record the DTC and freeze frame data.
(c) Use the hand–held tester to set to the check mode (See page 05–5).
(d) Drive the vehicle several times with the engine speed, load and its surrounding range shown with ENGINE SPD, CALC LOAD in the freeze frame data or MISFIRE RPM, MISFIRE LOAD in the data list. If you have no hand–held tester, turn the ignition switch OFF after the symptom is simulated once. Then repeat the simulation process again.

HINT:
In order to memorize the DTC of the misfire, it is necessary to drive around MISFIRE RPM, MISFIRE LOAD in the following data list.

Engine Speed	Time
Idling	3 minutes and 30 seconds or more
1000 rpm	3 minutes or more
2000 rpm	1 minutes 30 seconds or more
3000 rpm	1 minute or more

(e) Check whether there is misfire or not by monitoring the DTC and the freeze frame data, and then, record them.
(f) Turn the ignition switch OFF and wait at least 5 seconds.

INSPECTION PROCEDURE

HINT:

- If the other DTCs besides misfire are memorized simultaneously, first perform the troubleshooting for them.
- Read freeze frame data using the hand–held tester, as freeze frame data records the engine conditions when the malfunction is detected. When troubleshooting, it is useful for determining whether the vehicle was running or stopped, the engine was warmed up or not, the air–fuel ratio was lean or rich, etc. at the time of the malfunction.
- If the misfire is not occurred when the vehicle is brought to the workshop, it can be confirmed by reproducing the condition of the freeze frame data. After finishing the repair, confirm that there is no misfire (See the confirmation driving pattern).
- When either of SHORT FT #1, LONG FT #1, SHORT FT #2 or LONG FT #2 in the freeze frame data is over the range of ±20%, there is a possibility that the air–fuel ratio is inclining either to ”RICH” (–20% or less) or ”LEAN” (+20% or more).
- When COOLANT TEMP in the freeze frame data is less than 80˚C (176˚F), there is a possibility of misfire only during warming up.
- In case that the misfire cannot be reproduced, this may be because of the driving with the shortage of fuel, the use of improper fuel, a stain of ignition plug and etc.

1	CHECK WIRE HARNESS, CONNECTOR AND VACUUM HOSE IN ENGINE ROOM

(a) Check the connection conditions of the wire harness and connector.
(b) Check the disconnection, piping and break in the vacuum hose.

NG → REPAIR OR REPLACE, THEM CONFIRM THAT THERE IS NO MISFIRE

OK

2	CHECK CONNECTION OF PCV HOSE

NG → REPAIR OR REPLACE PCV HOSE

OK

3	INSPECT SPARK PLUG

NG → REPAIR OR REPLACE IGNITION SYSTEM

OK

4	INSPECT ECM(CHECK VOLTAGE)

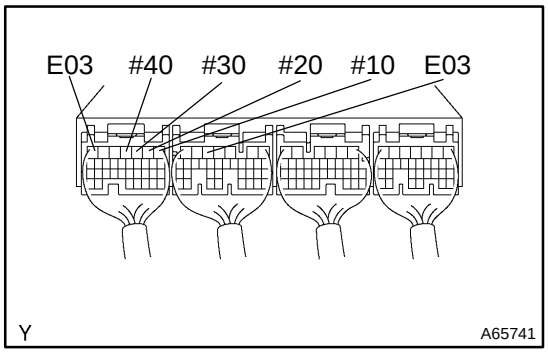

(a) Turn the ignition switch ON.
(b) Measure the voltage between applicable terminal and E03 of the ECM connector.
Voltage: 9 – 14 V
(c) Reference:
Inspection using oscilloscope injector signal waveform.
(1) With the engine idling, check the waveforms between terminals #10 – #40 and E01 of the ECM connector.

HINT:
The correct waveforms are shown below.

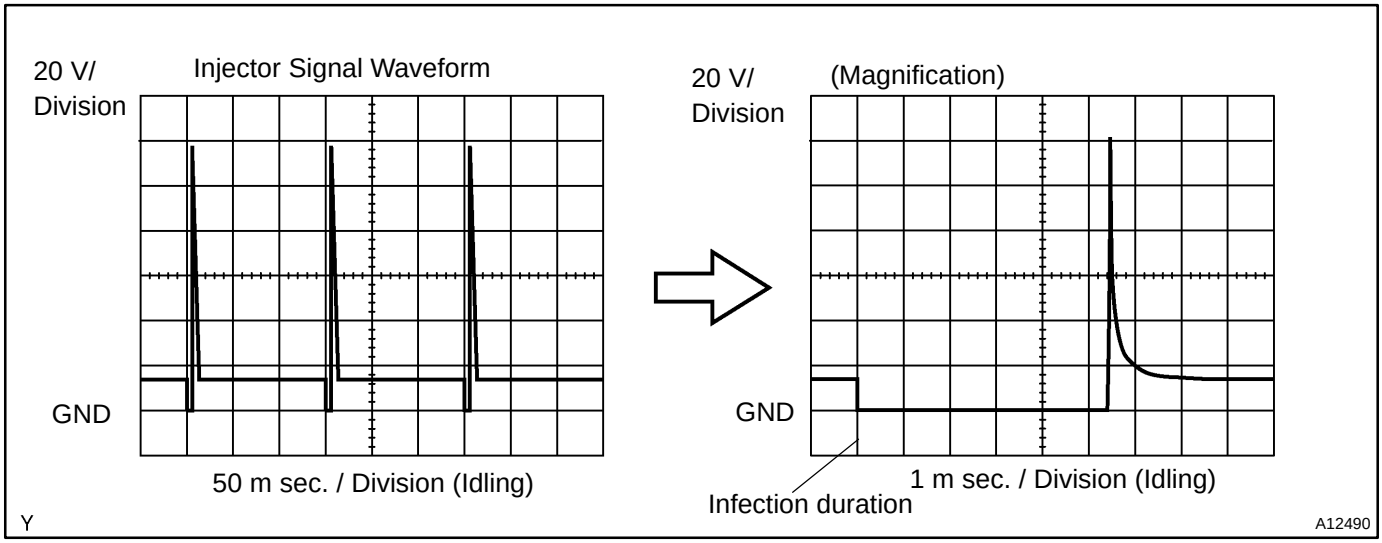

OK → **Go to step 6**

NG

5	INSPECT FUEL INJECTOR ASSY (See page 11–7)

NG → **REPLACE FUEL INJECTOR ASSY**

OK

CHECK WIRE HARNESS OR CONNECTOR

6	CHECK FUEL PRESSURE (See page 11–5)

NG → **REPAIR OR REPLACE FUEL PUMP, FUEL PIPE LINE AND FILTER**

OK

7	INSPECT FUEL INJECTOR ASSY (See page 11–7)

NG → REPLACE FUEL INJECTOR ASSY

OK

8	INSPECT INTAKE AIR FLOW METER SUB–ASSY (See page 10–2)

NG → REPAIR OR REPLACE INTAKE AIR FLOW METER SUB–ASSY

OK

9	INSPECT E.F.I. ENGINE COOLANT TEMPERATURE SENSOR (See page 10–2)

NG → REPLACE E.F.I. ENGINE COOLANT TEMPERATURE SENSOR

OK

CHECK COMPRESSION PRESSURE, VALVE CLEARANCE AND VALVE TIMING

DTC	P0325	KNOCK SENSOR 1 CIRCUIT MALFUNCTION (BANK 1)

CIRCUIT DESCRIPTION

The knock sensor is fitted to the cylinder block to detect the engine knocking. This sensor contains a piezo-electric element which generates a voltage when it becomes deformed. This occurs when the cylinder block vibrates due to knocking. If the engine knocking occurs, the ignition timing is delayed to suppress it.

DTC No.	DTC Detecting Condition	Trouble Area
P0325	No knock sensor signal to ECM with engine speed, 2,000 rpm or more	• Open or short in knock sensor circuit • Knock sensor (looseness) • ECM

HINT:

If the ECM detects above diagnosis conditions, it operates the fail safe function in which the corrective retard angle value is set to the maximum value.

WIRING DIAGRAM

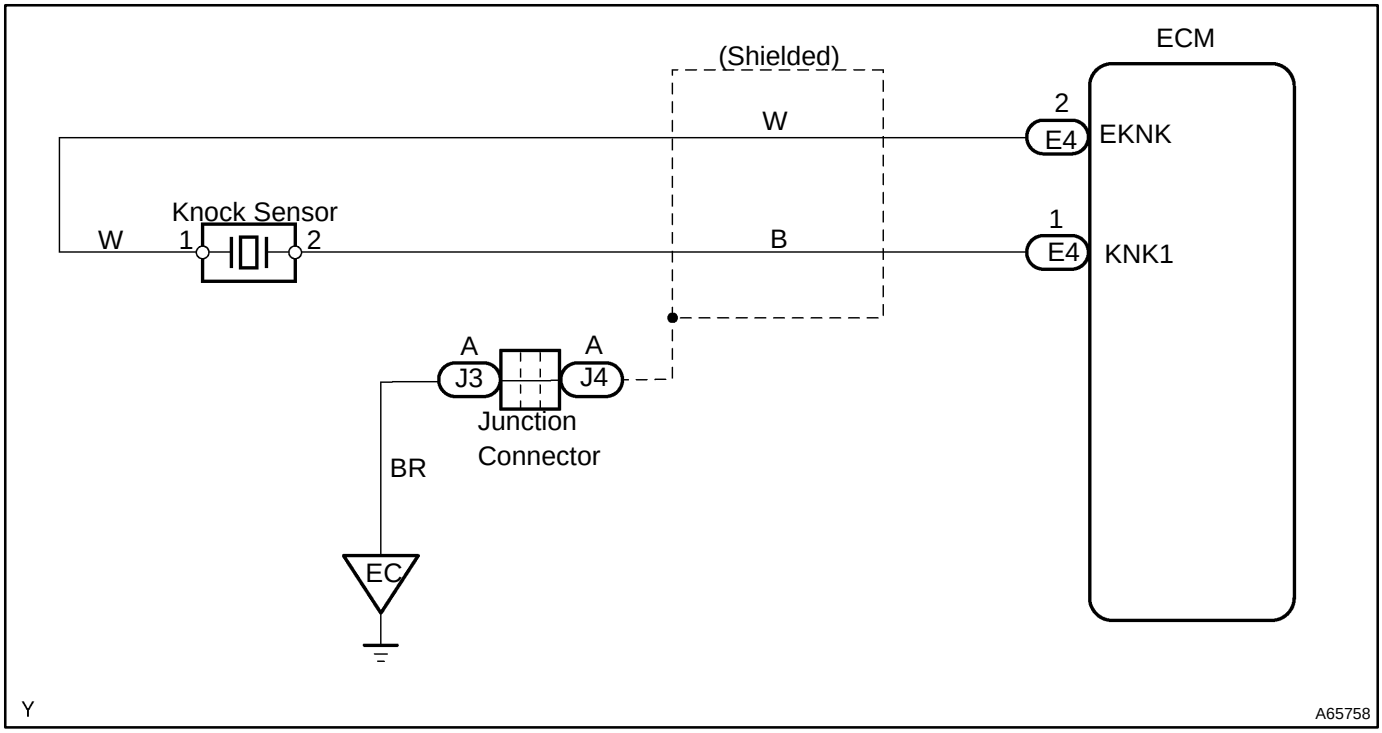

INSPECTION PROCEDURE

HINT:

Read freed frame data using hand–held tester OBD II scan tool. Because freeze frame records the engine conditions when the malfunction is detected, when troubleshooting it is useful for determining whether the vehicle was running or stopped, the engine warmed up or not, the air–fuel ratio lean or rich, etc. at the time of the malfunction.

1 CHECK HARNESS AND CONNECTOR

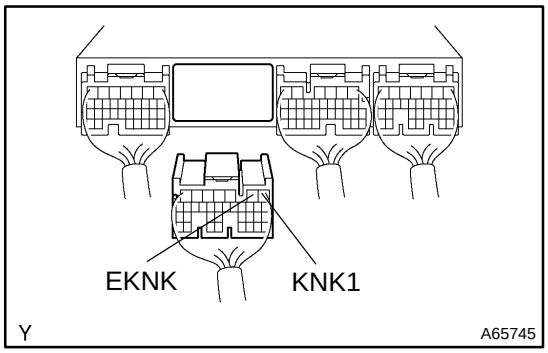

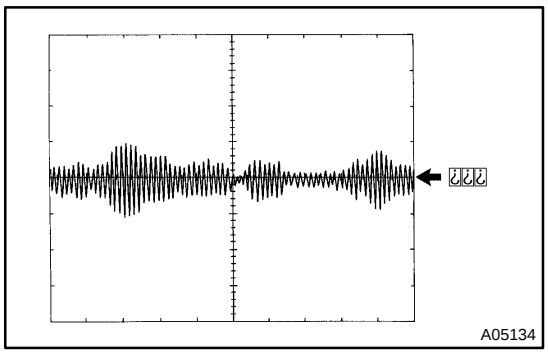

(a) Check for short on the wire harness between the ECM and the knock control sensor.
  (1) Disconnect the ECM E4 connector.
  (2) Check for short between the terminals KNK1 of ECM connector and EKNK of ECM connector.
  Resistance: 1 MΩ or more

(b) Reference:
Inspection using the oscilloscope.
  (1) With the engine racing at 4,000 rpm, check the waveform between terminal KNK1 of the ECM connector and the body ground.

HINT:
The correct waveforms are as shown in the left.
  (2) Spread the time on the horizontal axis, and confirm that period of the wave is 80 μ seconds (Normal mode vibration frequency of knock sensor: 11.7 kHz).

OK → **Go to step 3**

NG

2 INSPECT KNOCK CONTROL SENSOR (See page 10–2)

NG → **REPLACE KNOCK CONTROL SENSOR**

OK

3 CHECK HARNESS AND CONNECTOR(ECM–KNOCK CONTROL SENSOR)

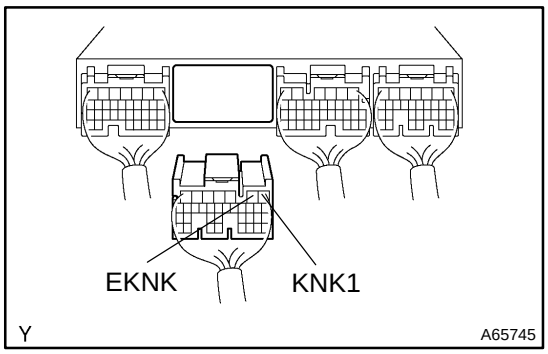

(a) Disconnect the knock control sensor connector.
(b) Disconnect the ECM E4 connector.
(c) Check continuity between the terminals KNK1 of the ECM connector and KNK1 of the knock control sensor.
  Resistance: 1 Ω or less
(d) Check for short between the terminals KNK1 and EKNK of the ECM connector.
  Resistance: 1 MΩ or more

NG → **REPAIR OR REPLACE HARNESS AND CONNECTOR**

OK

4	CONFIRM THE MALFUNCTION DISAPPEAR WHEN A GOOD KNOCK SENSOR IS INSTALLED

SST 09816–30010

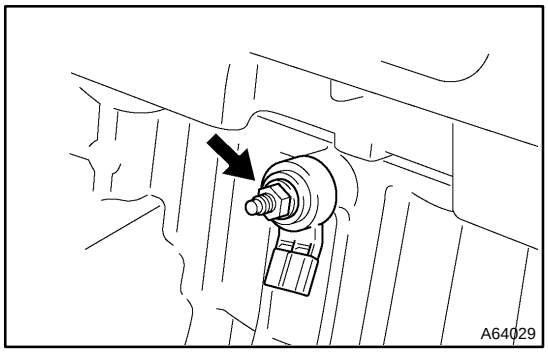

(a) Change the knock sensor to a new one
  (1) Remove the knock control sensor.
  (2) Install the knock control sensor.
  Torque: 20 N·m (204 kgf·cm, 15 ft·lbf)
(b) Perform the driving test.
(c) Read DTC.

Result:

	A	B
RESULT	P0325 is output	P0325 is not output

B → **REPLACE KNOCK CONTROL SENSOR**

A

CHECK AND REPLACE ECM

DTC	P0335	CRANKSHAFT POSITION SENSOR ”A” CIRCUIT MALFUNCTION

CIRCUIT DESCRIPTION

Crankshaft position sensor (NE signal) consists of a magnet, iron core and pick up coil.
The NE signal plate (crank angle sensor plate) has 34 teeth and is mounted on the crankshaft. The NE signal sensor generates 34 signals at every engine revolution. The ECM detects the standard crankshaft angle based on the G signal, the actual crankshaft angle and the engine speed by the NE signal.

DTC No.	DTC Detecting Condition	Trouble Area
P0335	No crankshaft position sensor signal to ECM during cranking (2 trip detection logic)	• Open or short in crankshaft position sensor circuit • Crankshaft position sensor • Crank angle sensor plate • ECM
	No crankshaft position sensor signal to ECM with engine speed 600 rpm or more (2 trip detection logic)	

WIRING DIAGRAM

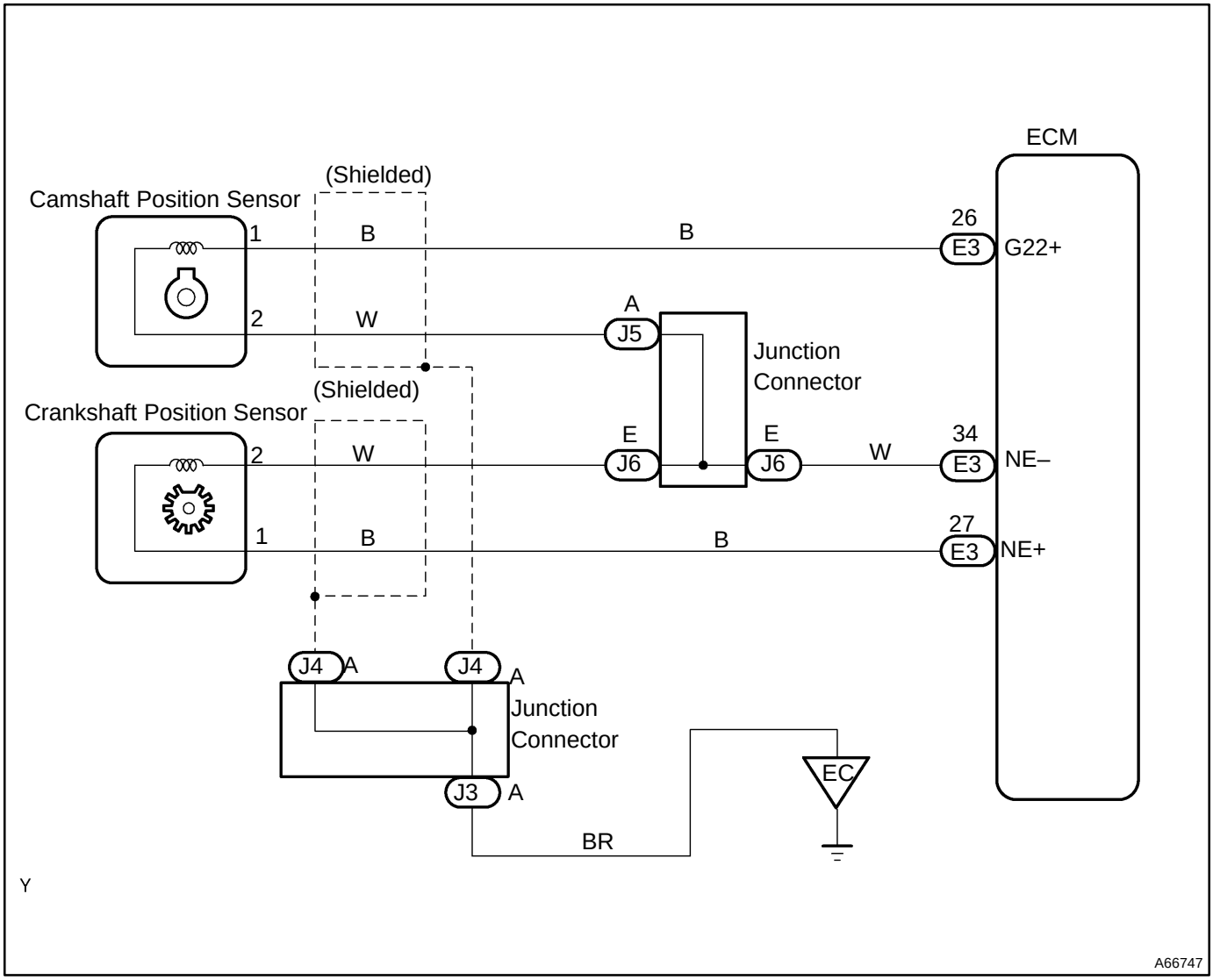

INSPECTION PROCEDURE

HINT:

- Read freed frame data using hand–held tester or OBD II scan tool. Because freeze frame records the engine conditions when the malfunction is detected, when troubleshooting it is useful for determining whether the vehicle was running or stopped, the engine warmed up or not, the air–fuel ratio lean or rich, etc. at the time of the malfunction.
- Perform troubleshooting of DTC P0335 first. If no trouble is found, troubleshoot the following mechanical system.

1	INSPECT CRANK POSITION SENSOR

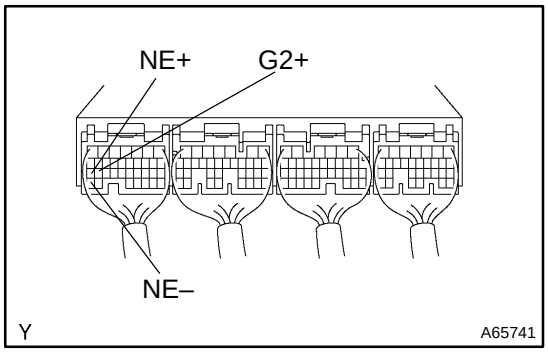

(a) Check the crankshaft position sensor for resistance.
Resistance:
985 – 1600 Ω (Cold)
1265 – 1890 Ω (Hot)

HINT:
”Cold” and ”Hot” above express the temperature of the part itself. ”Cold” is from –10°C (14°F) to 50°C (122°F) and ”Hot” is from 50°C (122°F) to 100°C (212°F).

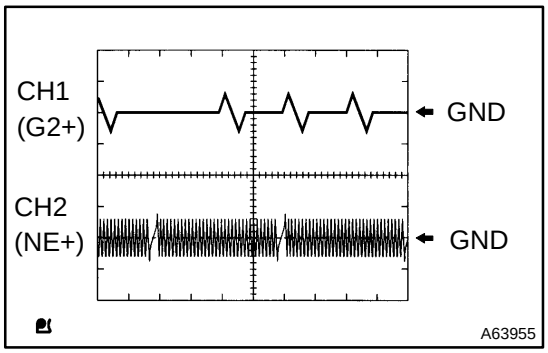

(b) Reference:
Inspection using the oscilloscope.
(1) During cranking or idling, check the wave form between terminals G2+ and NE–, and NE+ and NE– of the ECM connector.

HINT:
The correct wave forms are as shown in the left.

NG → **REPLACE CRANK POSITION SENSOR**

OK

2	CHECK HARNESS AND CONNECTOR(ECM–CRANKSHAFT POSITION SENSOR)

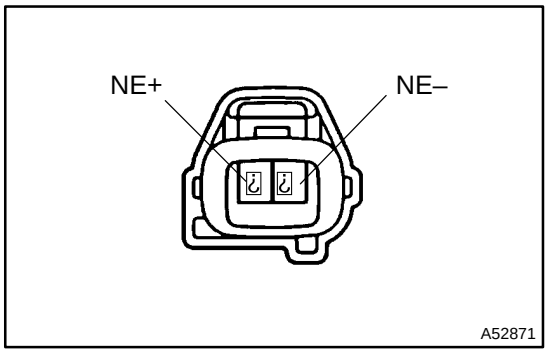

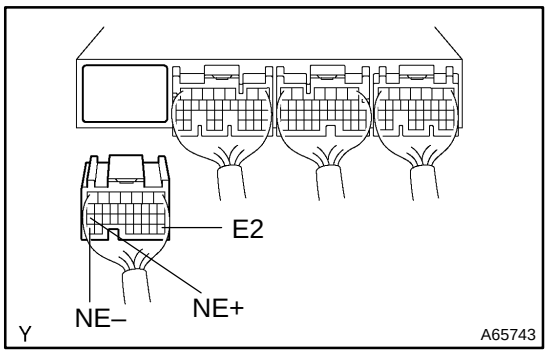

(a) Disconnect the crank position sensor connector.
(b) Disconnect the ECM E3 connector.
(c) Check continuity between the terminals NE+ of the crank position sensor connector and NE+ of the ECM connector.
Resistance: 1 Ω or less
(d) Check for short between the terminals NE+ and E2 of the ECM connector.
Resistance: 1 MΩ or more
(e) Check continuity between the terminals NE– of the crank position sensor connector and NE– of the ECM connector.
Resistance: 1 Ω or less
(f) Check for short between the terminals NE– and E2 of the ECM connector.
Resistance: 1 MΩ or more

NG → **REPAIR OR REPLACE HARNESS AND CONNECTOR**

OK

3	INSPECT SENSOR ATTACHMENT PART

(a) Check the crank position sensor installation .

NG → **REPAIR OR REPLACE SENSOR ATTACHMENT PART**

OK

4	INSPECT CRANKSHAFT POSITION SENSOR PLATE NO.1(TEETH OF SIGNAL PLATE)

(a) Remove the crank angle sensor plate.
(b) Check the teeth of the signal plate.

NG → **REPAIR OR REPLACE CRANKSHAFT POSITION SENSOR PLATE NO.1**

OK

CHECK AND REPLACE ECM

DTC	P0340	CAMSHAFT POSITION SENSOR CIRCUIT MALFUNCTION

CIRCUIT DESCRIPTION

Camshaft position sensor (G signal) consists of a magnet, iron core and pickup coil.
The G signal rotor has 3 teeth on the outside and is mounted on the intake camshaft.
When the camshafts rotate, the protrusion on the signal plate and the air gap on the pickup coil changes, causing fluctuations in the magnetic field and generating an electromotive force in the pickup coil.
The NE signal plate (crank angle sensor plate) has 34 teeth and is installed in the crankshaft. The NE signal sensor generates 34 signals at every engine revolution. The ECM detects the standard crankshaft angle based on the G signals, the actual crankshaft angle and the engine speed by the NE signals.

DTC No.	DTC Detecting Condition	Trouble Area
P0340	No camshaft position sensor signal to ECM during cranking (2 trip detection logic)	• Open or short in camshaft position sensor circuit • Camshaft position sensor • Intake camshaft • ECM
	No camshaft position sensor signal to ECM with engine speed 600 rpm or more	

WIRING DIAGRAM

Refer to DTC P0335 on page 05–76.

INSPECTION PROCEDURE

HINT:
Read freed frame data using hand–held tester or OBD II scan tool. Because freeze frame records the engine conditions when the malfunction is detected, when troubleshooting it is useful for determining whether the vehicle was running or stopped, the engine warmed up or not, the air–fuel ratio lean or rich, etc. at the time of the malfunction.

1	INSPECT CRANK POSITION SENSOR NO.1(CHECK RESISTANCE)

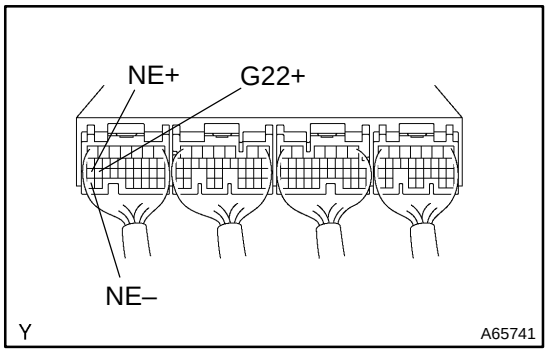

(a) Check the camshaft position sensor for resistance.
(See page 18–2)
Resistance:
1630 – 2740 Ω (Cold)
2065 – 3225 Ω (Hot)

HINT:
”Cold” and ”Hot” above express the temperature of the part itself. ”Cold” is from –10°C (14°F) to 50°C (122°F) and ”Hot” is from 50°C (122°F) to 100°C (212°F).

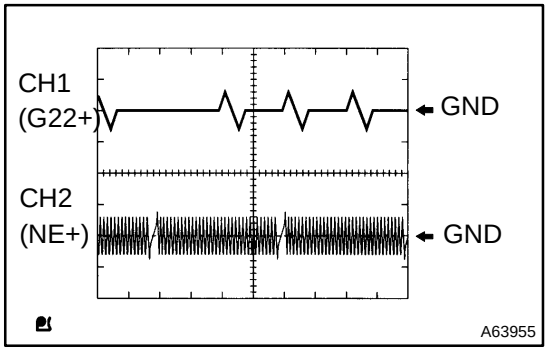

(b) Reference:
Inspection using the oscilloscope.
(1) During cranking or idling, check the waveform between terminals G22+ and NE–, and NE+ and NE– of the ECM connector.

HINT:
The correct waveforms are as shown in the left.

NG → **REPLACE CRANK POSITION SENSOR NO.1**

OK

2 CHECK HARNESS AND CONNECTOR(ECM–CAMSHAFT POSITION SENSOR)

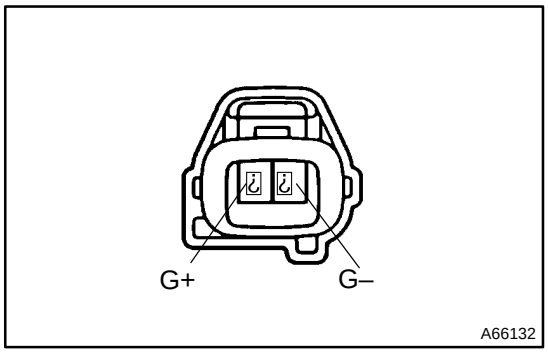

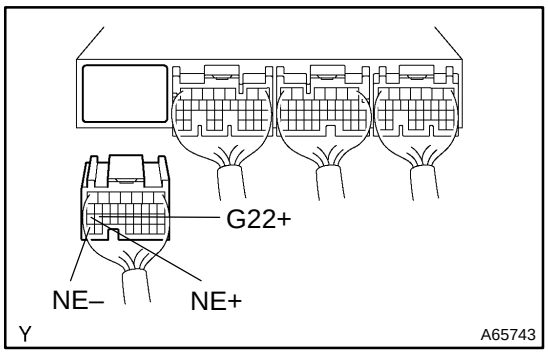

(a) Disconnect the cam position sensor connector.
(b) Disconnect the ECM E3 connector.
(c) Check continuity between the terminals G+ of the camshaft position sensor connector and G22+ of the the ECM connector.
Resistance: 1 Ω or less
(d) Check for short between the terminals G+ of the camshaft position sensor connector and E2 of the the ECM connector.
Resistance: 1 MΩ or more
(e) Check continuity between the terminals G– of the camshaft position sensor connector and the NE– of the the ECM connector.
Resistance: 1 Ω or less
(f) Check for short between the terminals NE– and E2 of the the ECM connector.
Resistance: 1 MΩ or more

NG → **REPAIR OR REPLACE HARNESS AND CONNECTOR**

OK

3 INSPECT SENSOR INSTALLATION

(a) Inspect the camshaft position sensor installation.

NG → **TIGHTEN SENSOR**

OK

4 INSPECT CAMSHAFT

(a) Remove the camshafts.
(b) Check the camshaft lobes.

NG → **REPAIR OR REPLACE CAMSHAFT**

OK

CHECK AND REPLACE ECM

DTC	P0420	CATALYST SYSTEM EFFCIENCY BELOW THRESHOLD (BANK 1)

CIRCUIT DESCRIPTION

The ECM compares the waveform of the oxygen sensor located in front of the catalyst with the waveform of the heated oxygen sensor located behind the catalyst to determine whether or not the catalyst performance has deteriorated.

Air–fuel ratio feedback compensation keeps the waveform of the oxygen sensor in front of the catalyst repeatedly changing back and forth, from rich to lean.

If the catalyst is functioning normally, the waveform of the heated oxygen sensor behind the catalyst switches back and forth between rich and lean much more slowly than the waveform of the oxygen sensor in front of the catalyst.

But when both waveforms change at a similar rate, it is indicated that the catalyst performance has deteriorated.

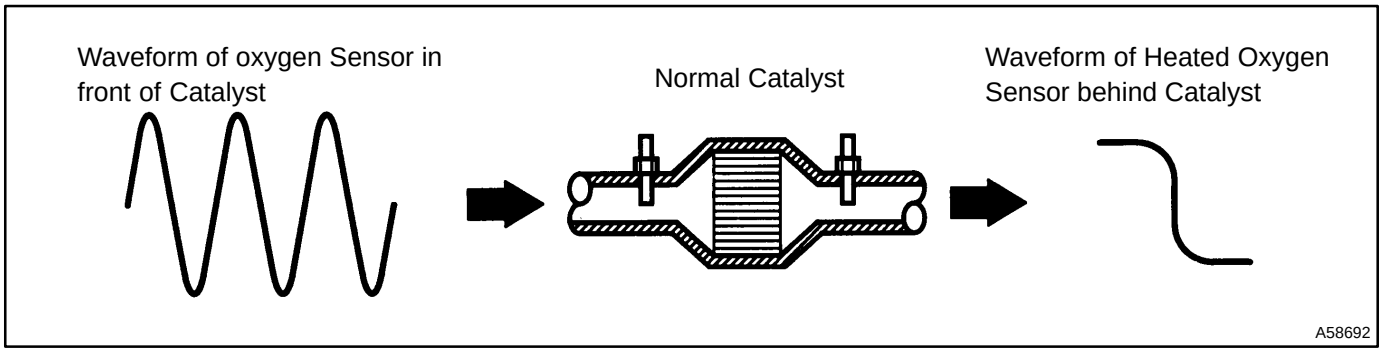

DTC No.	DTC Detecting Condition	Trouble Area
P0420	After engine and catalyst are warmed up, and while vehicle is driven within set vehicle and engine speed range, waveforms of oxygen sensors have same amplitude (2 trip detection logic)	• Gas leakage on exhaust system • Oxygen sensor • Heated oxygen sensor • Three–way catalytic converter

CONFIRMATION DRIVING PATTERN

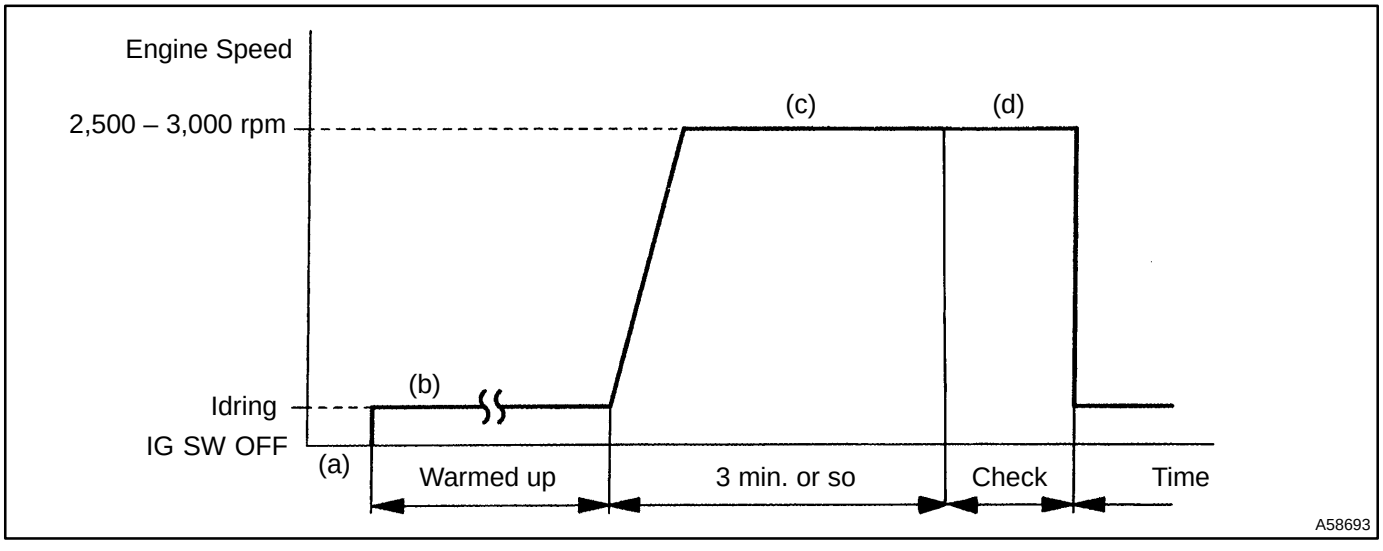

(a) Connect the hand–held tester or OBD II scan tool to the DLC3, or connect the probe of the oscilloscope between terminals HAF1A, HAF2A, OX1B, OX2B and E1 of the ECM connector.
(b) Start the engine and warm it up with all the accessories switched OFF until the water temperature is stable.
(c) Race the engine at 2,500 – 3,000 rpm for about 3 min.
(d) After confirming that the waveforms of the oxygen sensor (bank 1 sensor 1 (OX)) which oscillates around 0.5 V during feedback to the ECM, check the waveform of the heated oxygen sensor (bank 1 sensor 2 (OX2)).

HINT:

- If there is a malfunction in the system, the waveform of the heated oxygen sensor (bank 1 sensor 2 (OX2)) is almost the same as that of the oxygen sensor (bank 1 sensor 1 (OX)) on the left.
- There are some cases that, the MIL may either light up or not light up even though a malfunction exists.

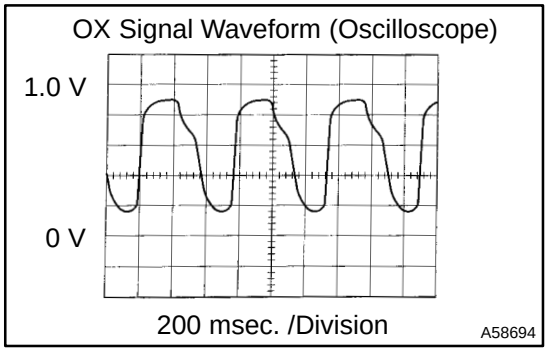

INSPECTION PROCEDURE

HINT:

Read freeze frame data using the hand–held tester or OBD II scan tool, as freeze frame data records the engine conditions when the malfunction is detected. When troubleshooting, it is useful for determining whether the vehicle was running or stopped, the engine was warmed up or not, the air–fuel ratio was lean or rich, etc. at the time of the malfunction.

1	READ OUTPUT DTC(BESIDES P0420)

(a) Read the DTCs with the hand–held tester or OBD II scan tool.
Result:

	A	B
RESULT	P0420 is output	P0420 and other codes are output

B → GO TO RELEVANT DTC CHART

A

2	CHECK EXHAUST GAS LEAK

NG → REPAIR OR REPLACE

OK

3	CHECK OXYGEN SENSOR(BANK 1 SENSOR 1) (See page 05–51)

NG → REPAIR OR REPLACE OXYGEN SENSOR

OK

4	CHECK OXYGEN NO.2 SENSOR(BANK 1 SENSOR 2) (See page 05–51)

NG → REPAIR OR REPLACE OXYGEN NO.2 SENSOR

OK

REPLACE EXHAUST PIPE ASSY FRONT

DTC	P0440	EVAPORATIVE EMISSION CONTROL SYSTEM MALFUNCTION

DTC	P0442	EVAPORATIVE EMISSION CONTROL SYSTEM MALFUNCTION

CIRCUIT DESCRIPTION

The vapor pressure sensor, VSV for Canister Closed Valve (CCV) and VSV for pressure switching valve are used to detect abnormalities in the evaporative emission control system.

The ECM decides whether or not there is an abnormality in the evaporative emission control system by the vapor pressure sensor signal.

DTC P0440 or P0442 is recorded by the ECM when evaporative emissions leak from the components within the dotted line in Fig. 1 below, or when the vapor pressure sensor malfunctions.

Fig. 1

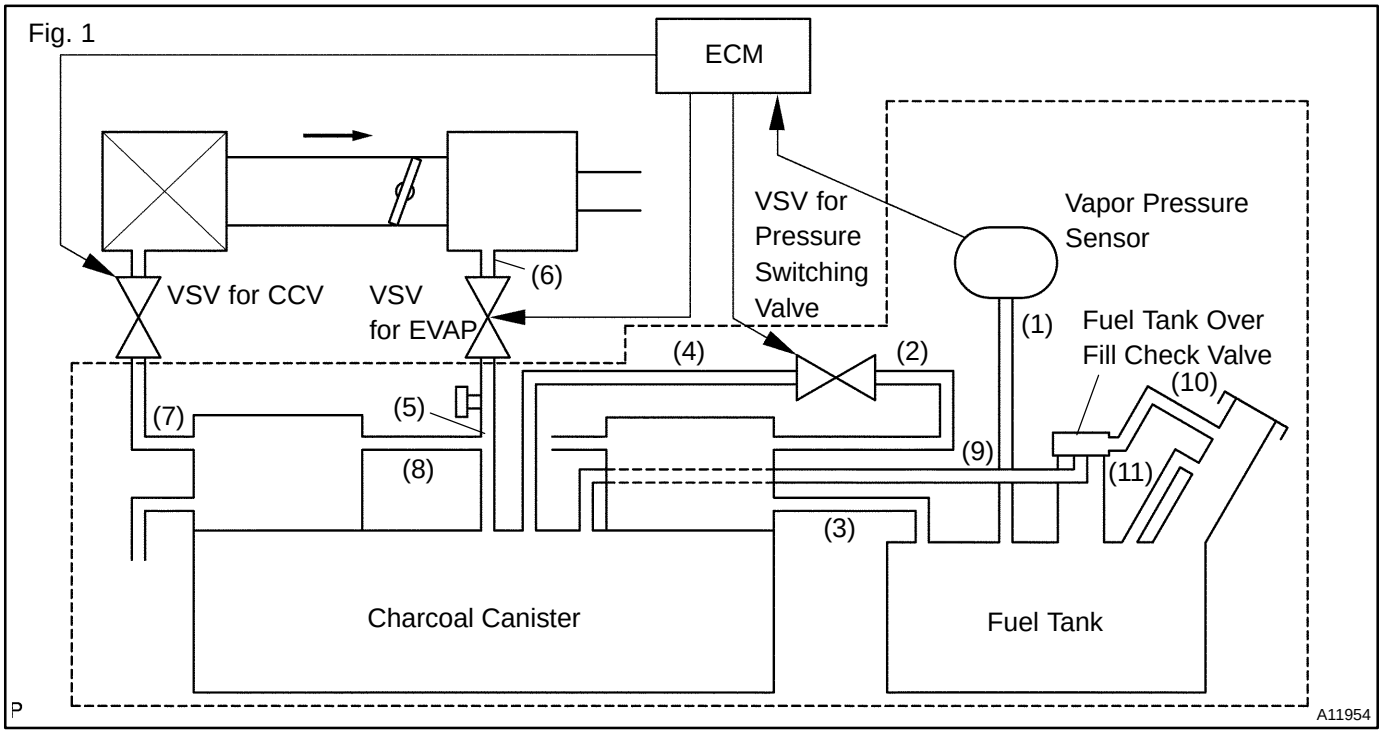

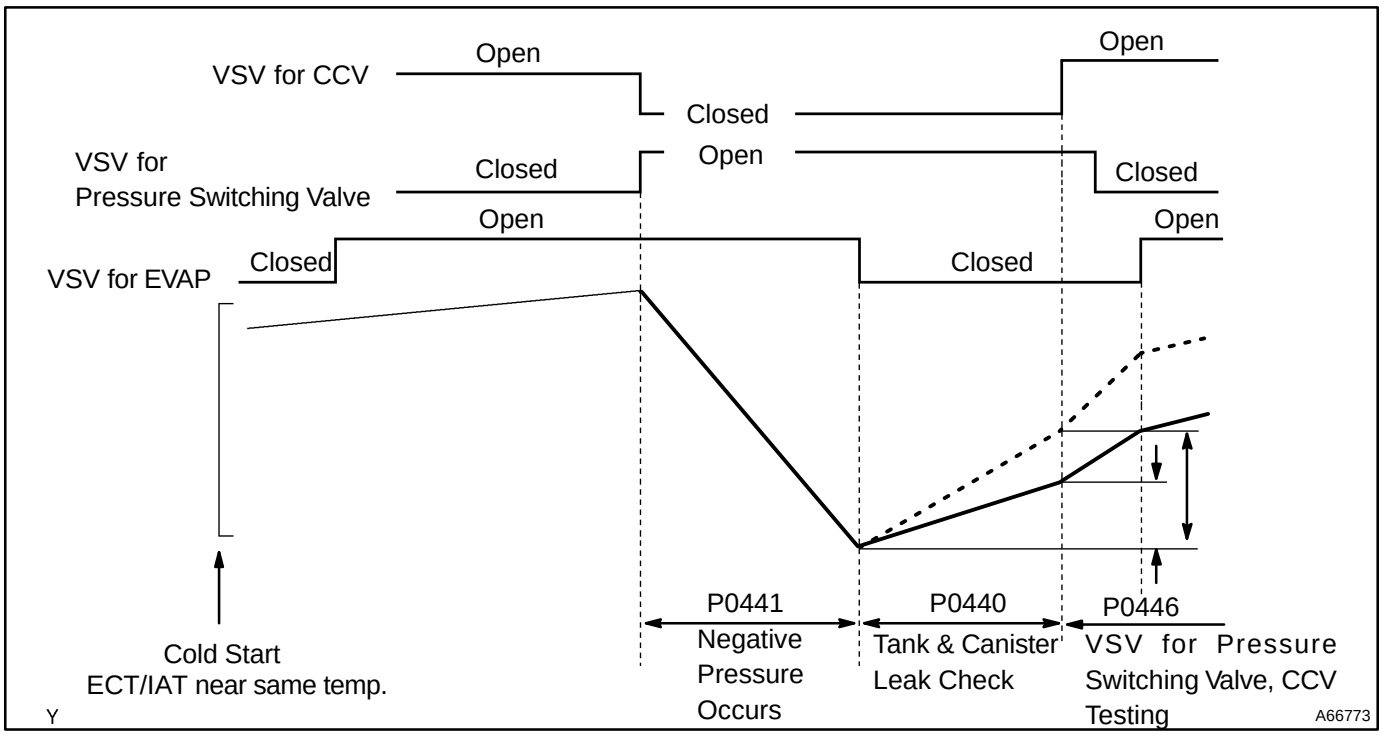

After purge operation, the VSV for EVAP is turned off sealing the vacuum in the system and the ECM begins to monitor the pressure increase. Some increase in normal. A very rapid, sharp increase in pressure indicates a leak in the EVAP system and sets the DTC P0440.
A pressure rise just above normal indecates a very small hole and will set the DTC P0442.

DTC No.	DTC Detecting Condition	Trouble Area
P0440 P0442	Fuel tank pressure is atmospheric pressure after vehicle is driven for 20 min. (2 trip detection logic)	• Hose or tube cracked, holed, damaged or loose seal ((3), (5), (7), (8), (9), (10) and (11) in Fig. 1) • Fuel tank cap incorrectly installed • Fuel tank cap cracked or damaged • Vacuum hose cracked, holed, blocked, damaged or disconnected ((1), (2) or (3) in Fig. 1) • Fuel tank cracked, holed or damaged • Charcoal canister cracked, holed or damaged • Open or short in vapor pressure sensor circuit • VSV for CCV • VSV for EVAP • VSV for Pressure Switching Valve • Vapor pressure sensor • Fuel tank over fill check valve cracked or damaged • ECM

WIRING DIAGRAM

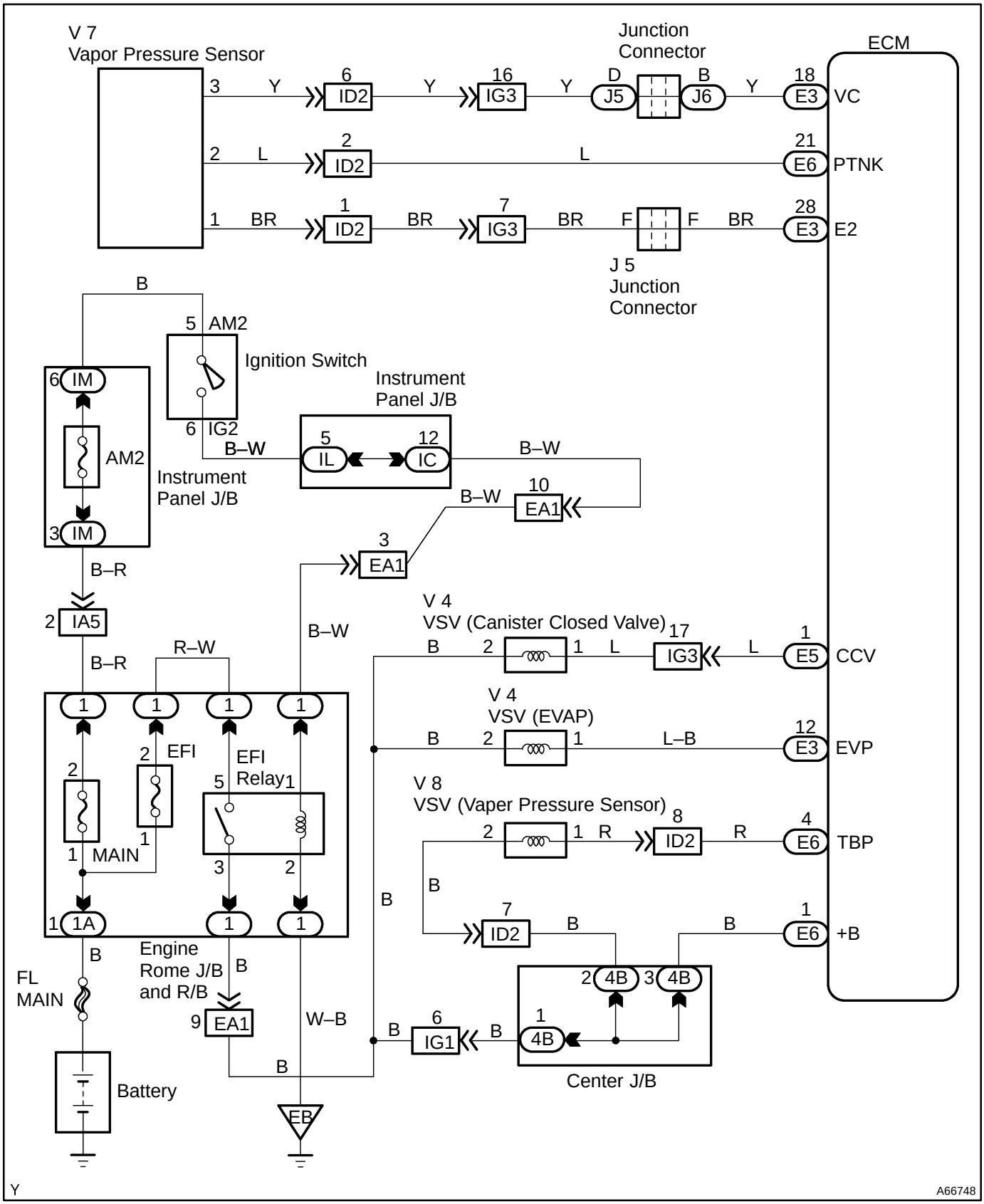

CONFIRMATION READINESS TEST

1. First Trip Procedure

(a) Vehicle must be cold, ambient temperature approximately between 50˚F – 95˚F.

(b) Intake Air Temp. (IAT) and Engine Coolant Temp. (ECT) sensor almost same value.

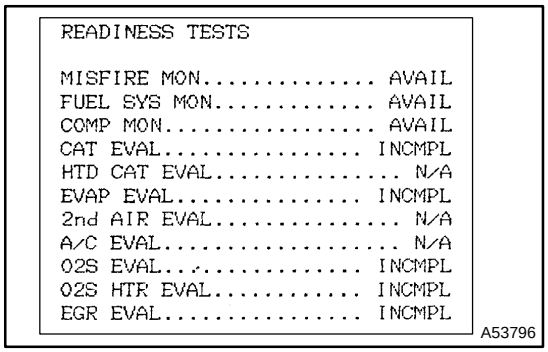

(c) Clear DTC's.

- Disconnect the battery terminal or E.F.I. and ECTS fuses.
- Readiness tests will show INCMPL (incomplete).

(d) Drive the vehicle according to LA#4 drive cycle. Note the state of Readiness Tests. They will change to COMPL as the evaluation monitors operate and if the system passes. This procedure may take approximately 20 min. or more.

NOTICE:

Do not shut off the engine – the results will be invalid.

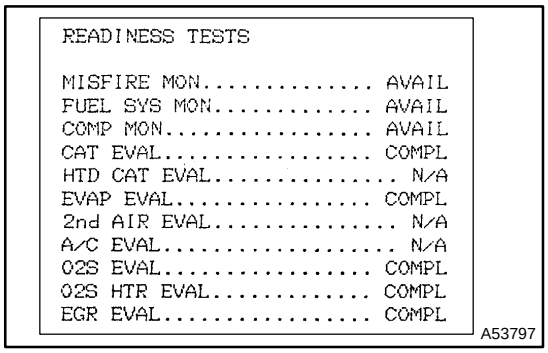

2. Pass Condition – No Problem Found by the ECM

If the EVAP evaluation monitor shows COMPL, go to the Non–Continuous Test screen.

NOTICE:

Do not shut off the engine – the results will be invalid.

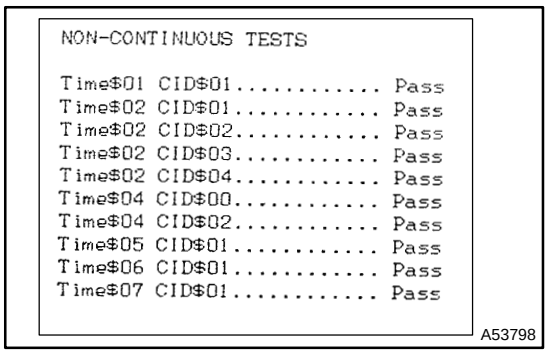

- To get there, go to Advanced OBD II, Onboard Tests, Non–continuous Tests.
- If all of the tests in the time $02 category Tests show Pass, the evaluation monitor has operated and no problem was detected.

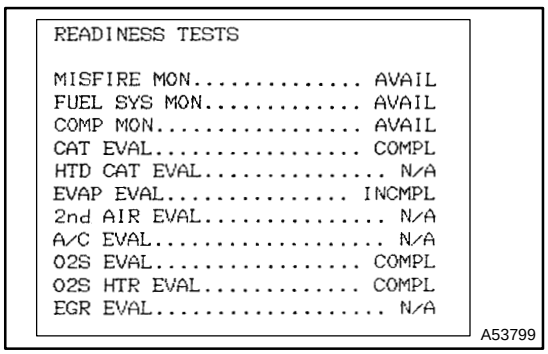

3. Fail Condition – Problem Detected by the ECM

If the EVAP evaluation monitor shows INCMPL, go to the Non–Continuous Test screen.

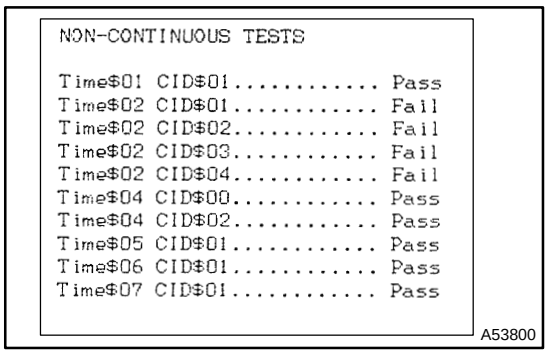

(1) If all Tests show Pass, the following may have occurred.
- The EVAP evaluation monitor did not operate.
- The EVAP evaluation monitor did not finish.
- The ECM withheld judgement.

(2) If one or more of the tests in the time $02 category show Fail, the EVAP evaluation monitor did operate and the ECM detected a problem.

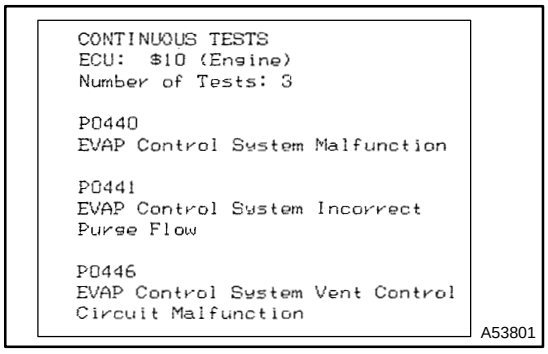

(3) Go to Continuous Tests screen. This is the only place DTC's are listed for the first trip.

NOTICE:
The DTC listed may not be valid. A second trip is needed to confirm the DTC.

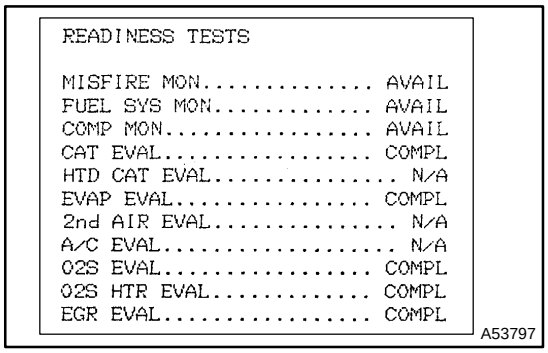

4. Second Trip Procedure

(a) Vehicle must be cold, ambient temperature approximately between 50°F – 95°F.

(b) Go to Readiness Tests screen.

(c) Drive the vehicle according to LA#4 drive cycle. Note the state of EVAP evaluation monitor. This procedure may take approximately 20 minutes or more.

NOTICE:
Do not shut off the engine – the results will be invalid.

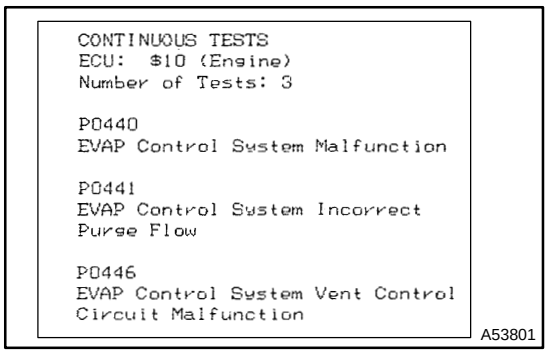

(d) If Readiness Tests changes to COMPL, the EVAP evaluation monitor has operated. Check for any stored DTC's.
- If a DTC has stored, the problem has been detected and confirmed by the ECM.
- If no DTC was found, the EVAP monitor operated but no problem was detected.

INSPECTION PROCEDURE

HINT:

- If DTC P0441, P0446, P0450 or P0451 is output after DTC P0440, first troubleshoot DTC P0441, P0446, P0450 or P0451. If no malfunction is detected, troubleshoot DTC P0440 next.
- Ask the customer whether, after the MIL came on, the customer found the fuel tank cap loose and tightened it. Also ask the customer whether the fuel tank cap was loose when refuelling. If the fuel tank cap was loose, it was the cause of the DTC. If the fuel tank cap was not loose or if the customer was not sure if it was loose, troubleshoot according to the following procedure.
- Read freeze frame data using hand–held tester or OBD II scan tool, as freeze frame data records the engine conditions when a malfunction is detected. When troubleshooting, it is useful for determining whether the vehicle was running or stopped, the engine was warmed up or not, the air–fuel ratio was lean or rich, etc. at the time of the malfunction.
- When the ENGINE RUN TIME in the freeze frame data is less than 200 seconds, carefully check the vapor pressure sensor.

1	PERFORM ACTIVE TEST BY HAND–HELD TESTER

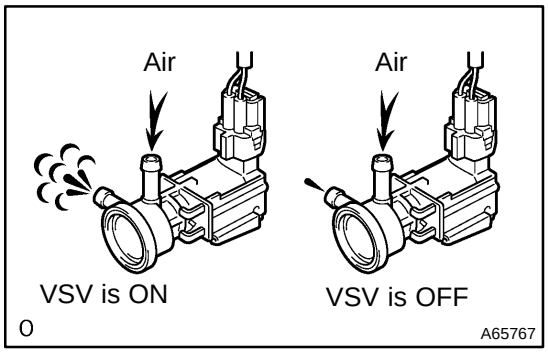

(a) Select the ACTIVE TEST mode on the hand–held tester.
(b) Disconnect the vacuum hose from the VSV for the EVAP.
(c) Start the engine.
(d) Select the item ”EVAP VSV(ALONE)” in the ACTIVE TEST and operate the shift solenoid valves.
(e) When the VSV for the EVAP is operated by the hand–held tester, apply the disconnected hose to your finger to check the suction.
Result:
VSV is ON: Disconnected hose sucks.
VSV is OFF: Disconnected hose does not suck.
(f) Select the item ”INTAKE CTL VSV1” in the ACTIVE TEST and operate the shift solenoid valves.

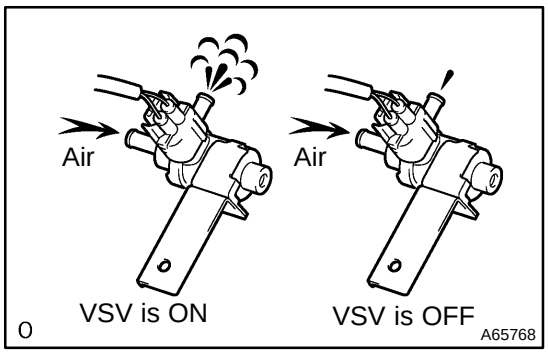

(g) Check the VSV for CCV operation when it is operated by the hand–held tester.
Result:
VSV is ON: Disconnected hose sucks.
VSV is OFF: Disconnected hose does not suck.

(h) Select the item ”TANK BYPASS VSV” in the ACTIVE TEST and operate the shift solenoid valves.

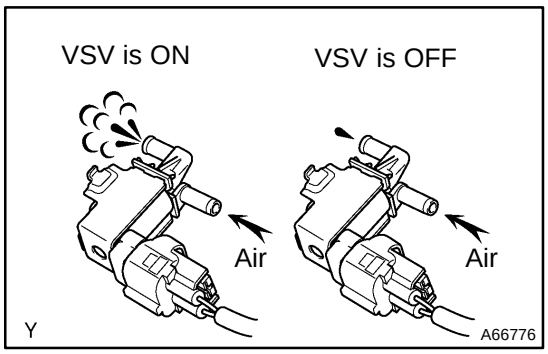

(i) Check the VSV for pressure switching valve operation when it is operated by the hand–held tester.
Result:
VSV is ON: Disconnected hose sucks.
VSV is OFF: Disconnected hose does not suck.

NG → **REPAIR OR REPLACE**

OK

2	PERFORM ACTIVE TEST BY EVAPORATIVE EMISSIONS LEAK(EVAP SYS CHECK)

(a) Connect the hand–held tester to the DLC3.
(b) Select the ”EVAP SYS CHECK” mode on the hand–held tester.
(c) Perform ”EVAP SYS CHECK”.
DISPLAY:

A	B	C
Scan tool detects a leak on the fuel tank side.	Scan tool detects a leak on the canister side.	Scan tool does not detect a leak in the EVAP system.

B → **Go to step 7**

C → **CHECK VACUUM HOSE**

A

3	CHECK FUEL TANK CAP ASSY(TOYOTA GENUINE PARTS)

(a) Replace to toyota genuine parts.
(b) After replace, perform ”EVAP SYS CHECK” by hand–held tester. (Go to step 2)

OK → **Go to step 4**

NG

REPLACE TO TOYOTA GENUINE PARTS

4	CHECK FUEL TANK CAP FOR CORRECTLY INSTALLED

(a) Correctly install fuel tank cap.
(b) After install, perform ”EVAP SYS CHECK” by hand–held tester. (Go to step 2)

OK → **Go to step 5**

NG

CORRECTLY INSTALL FUEL TANK CAP

5	INSPECT FUEL TANK CAP ASSY (See page 12–7)

(a) Replace to fuel tank cap assy.
(b) After replace, perform ”EVAP SYS CHECK” by hand–held tester. (Go to step 2)

OK → Go to step 6

NG

REPLACE FUEL TANK CAP ASSY

6	CHECK FUEL TANK INLET PIPE SUB–ASSY

(a) Remove the fuel tank cap.
(b) Visually inspect the fuel inlet pipe for damage.
(c) After repair or replace, perform ”EVAP SYS CHECK” by hand–held tester. (Go to step 2)

NG → REPLACE FUEL TANK INLET PIPE SUB–ASSY

OK

REPAIR OR REPLACE VACUUM HOSE

7	CHECK FUEL HOSE(VSV FOR PRESSURE SWITCHING VALVE–CHARCOAL CANISTER)

(a) Check for proper connection of the fuel tank and fuel EVAP pipe, fuel EVAP pipe and fuel tube under the floor, fuel tube under the floor and charcoal canister.
(b) Check the hose and tube for cracks, hole and damage.

NG → REPAIR OR REPLACE

OK

8	CHECK CHARCOAL CANISTER ASSY

NG → REPLACE CHARCOAL CANISTER ASSY

OK

9	INSPECT ECM(CHECK VOLTAGE)

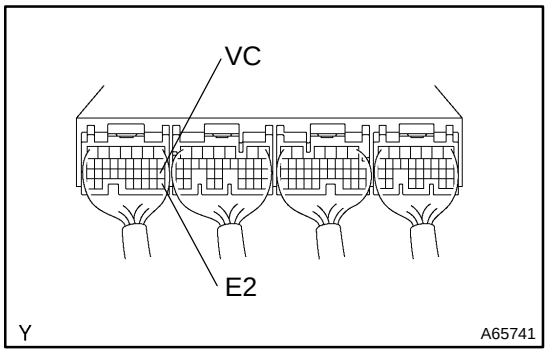

(a) Turn the ignition switch ON.
(b) Measure voltage between terminals VC and E2 of ECM E2 connector.
Voltage: 4.5 – 5.5 V

NG → **CHECK AND REPLACE ECM**

OK

10	INSPECT ECM(CHECK VOLTAGE)

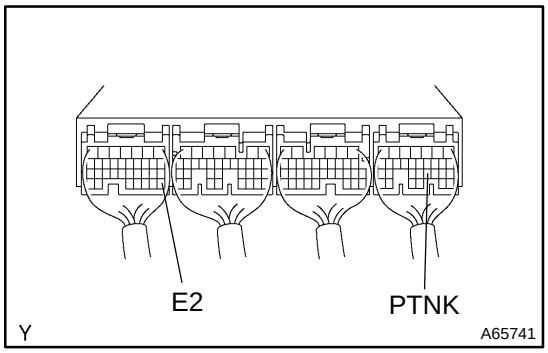

(a) Remove the fuel tank cap.
(b) Turn the ignition switch ON.
(c) Measure the voltage between terminals PTNK of the ECM E6 connector and E2 of the ECM E3 connector.
Voltage: 3.0 – 3.6 V

OK → **Go to step 12**

NG

11	CHECK HARNESS AND CONNECTOR(VAPOR PRESSURE SENSOR–ECM)

NG → **REPAIR OR REPLACE HARNESS AND CONNECTOR**

OK

REPLACE VAPOR PRESSURE SENSOR ASSY

12	CHECK FUEL TANK AND FUEL TANK OVER FILL CHECK VALVE FOR CRACKS AND DAMAGE

NG → **REPLACE FUEL TANK ASSY**

OK

IT IS LIKELY THAT VEHICLE USER DID NOT PROPERLY CLOSE FUEL TANK CAP

DTC	P0441	EVAPORATIVE EMISSION CONTROL SYSTEM INCORRECT PURGE FLOW

DTC	P0446	EVAPORATIVE EMISSION CONTROL SYSTEM MALFUNCTION

CIRCUIT DESCRIPTION

The vapor pressure sensor, VSV for Canister Closed Valve (CCV), VSV for pressure switching valve are used to detect abnormalities in the evaporative emission control system.

The ECM decides whether or not there is an abnormality in the evaporative emission control system by the vapor pressure sensor signal.

DTCs P0441 and P0446 are recorded by the ECM when evaporative emissions leak from the components within the dotted line in Fig. 1 below, or when there is a malfunction in the VSV for EVAP, the VSV for pressure switching valve or in the vapor pressure sensor itself.

Fig. 1

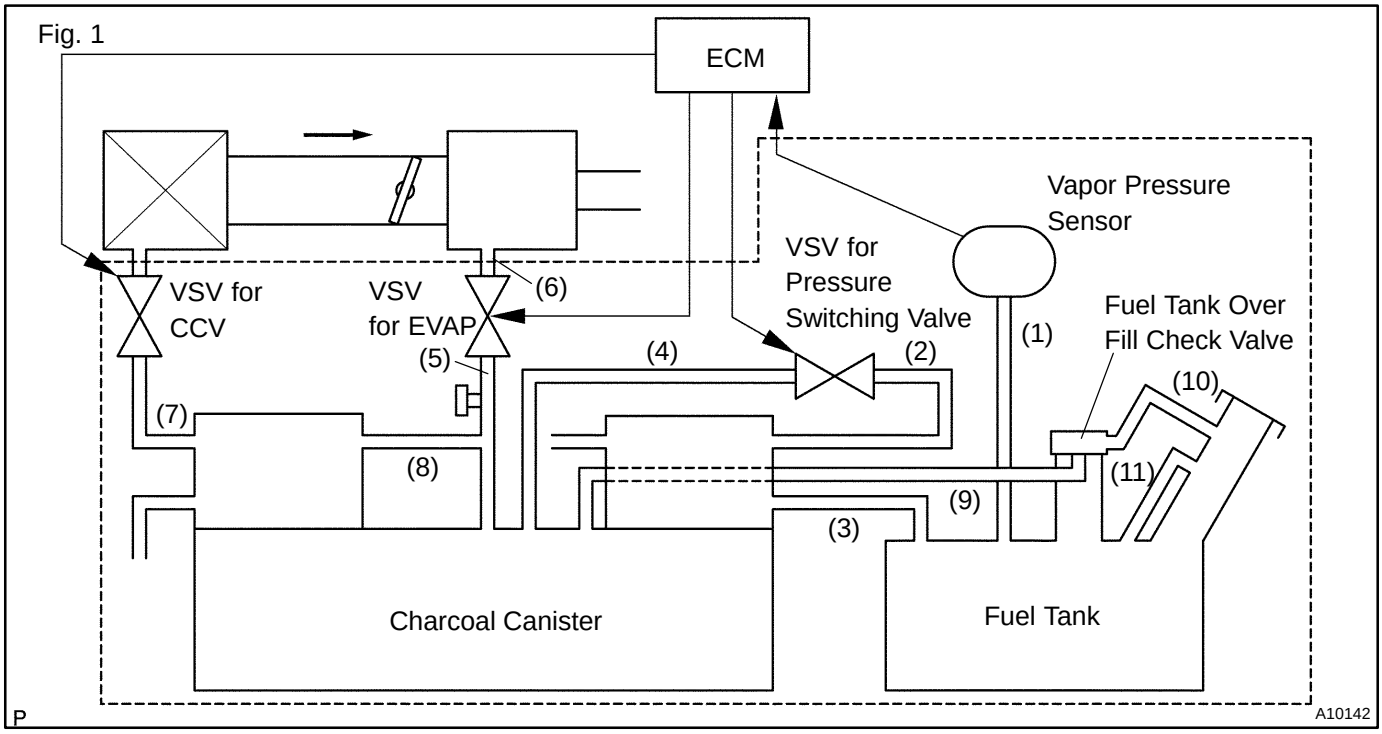

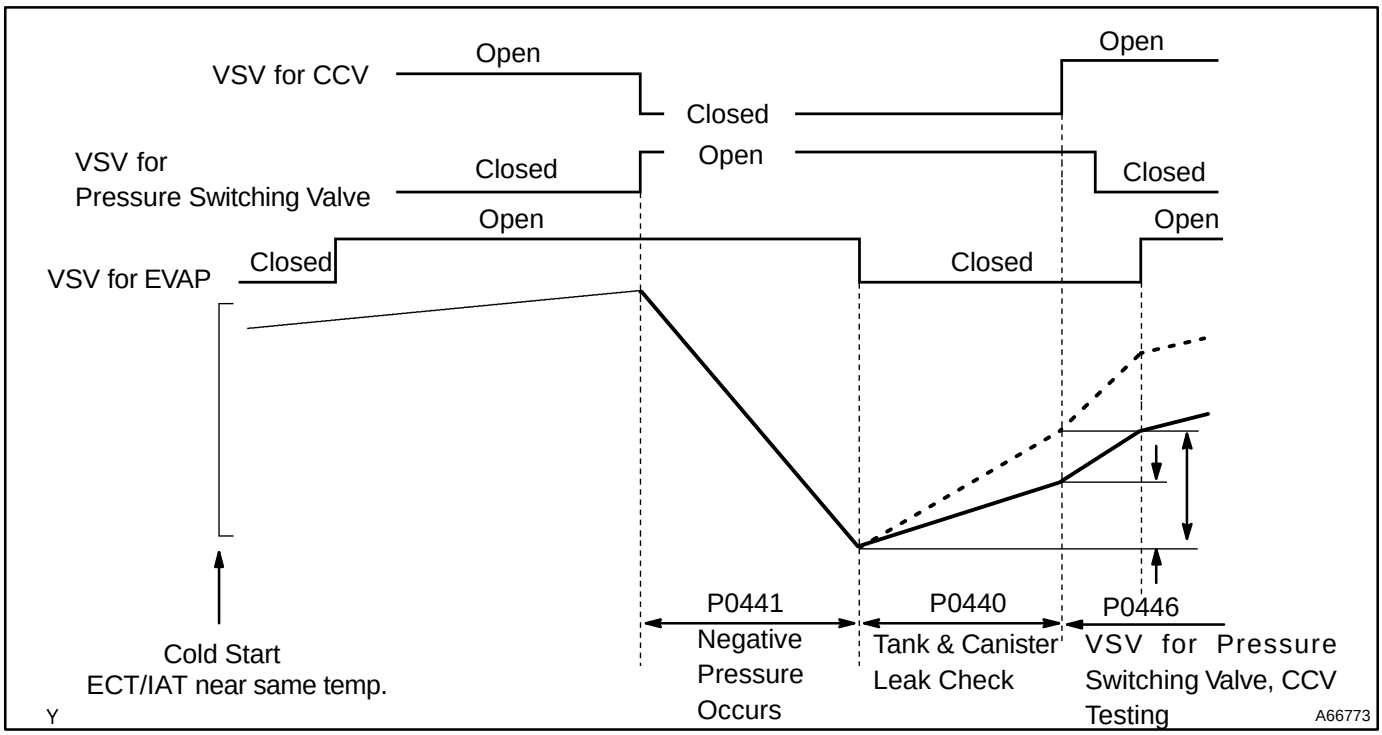

P0441:

The ECM closes the CCV and opens the VSV for pressure switching valve causing vacuum to increase in the entire EVAP system.

The ECM continues to operate the VSV for EVAP until the vacuum is increased to a specified point at which time the ECM closes the VSV for EVAP.

If the vacuum did not increase, or if the vacuum increased beyond the specified limit, the ECM judges the VSV for EVAP and related components to be faulty.

P0446:

When the vapor pressure rises to a specified point, the ECM opens the VSV for CCV. Pressure will increase rapidly because of the air allowed into the system. No increase or an increase below specified rate of pressure increase indicates a restriction on the air inlet side.

The ECM closes the VSV for pressure switching valve. This action blocks air entering the fuel tank side of system. The pressure rise on the fuel tank side is no longer as great.

If there was no change in pressure, the ECM will conclude the VSV for pressure switching valve did not close.

DTC No.	DTC Detecting Condition	Trouble Area
P0441	• Pressure in charcoal canister does not drop during purge control (2 trip detection logic) • During purge cut–off, pressure in charcoal canister is very low compared with atmospheric pressure (2 trip detection logic)	• Vacuum hose cracks, holed, blocked, damaged or disconnected ((1), (2), (3), (4), (5), (7), (8), (9), (10) and(11) in Fig. 1) • Fuel tank cap incorrectly installed • Open or short in vapor pressure sensor circuit • Vapor pressure sensor • Open or short in VSV circuit for EVAP • VSV for EVAP • Open or short in VSV circuit for CCV • VSV for CCV • Open or short in VSV circuit for pressure switching valve • VSV for pressure switching valve • Fuel tank cracked, holed or damaged • Charcoal canister cracked, holed or damaged • Fuel tank over fill check valve cracked or damaged • ECM
P0446	• When the vapor pressure rises to a specified point,the ECM opens the VSV for CCV. Pressure will increase rapidly because of the air allowed into the system. No increase or an increase below specified rate of pressure increase indicates a restriction on the air inlet side. • The ECM closes the VSV for pressure switching valve. The pressure rise is no longer as great. If there was no change in pressure, the ECM will conclude the VSV for pressure switching valve did not close.	

WIRING DIAGRAM

Refer to DTC P0440 on page 05–84.

INSPECTION PROCEDURE

HINT:

- If DTC P0441, P0446, P0450 or P0451 is output after DTC P0440, first troubleshoot DTC P0441, P0446, P0450 or P0451. If no other malfunctions than them are detected, troubleshoot DTC P0440 next.
- Read freeze frame data using the hand–held tester or OBD II scan tool, as freeze frame data records the engine conditions when the malfunction is detected. When troubleshooting, it is useful for determining whether the vehicle was running or stopped, the engine was warmed up or not, the air–fuel ratio was lean or rich, etc. at the time of the malfunction.

Hand–held tester:

1	PERFORM ACTIVE TEST BY HAND–HELD TESTER

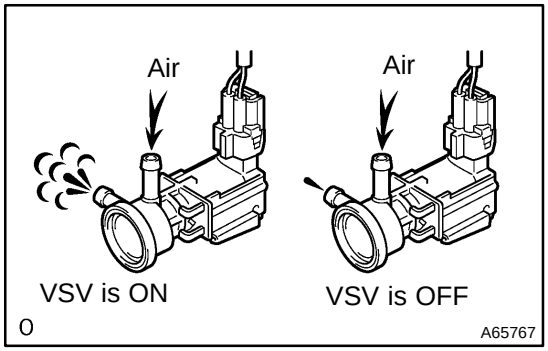

(a) Select the ACTIVE TEST mode on the hand–held tester.
(b) Disconnect the vacuum hose from the VSV for the EVAP.
(c) Start the engine.
(d) Select the item ”EVAP VSV(ALONE)” in the ACTIVE TEST and operate the shift solenoid valves.
(e) When the VSV for the EVAP is operated by the hand–held tester, apply the disconnected hose to your finger to check the suction.
Result:
VSV is ON: Disconnected hose sucks.
VSV is OFF: Disconnected hose does not suck.
(f) Select the item ”INTAKE CTL VSV1” in the ACTIVE TEST and operate the shift solenoid valves.

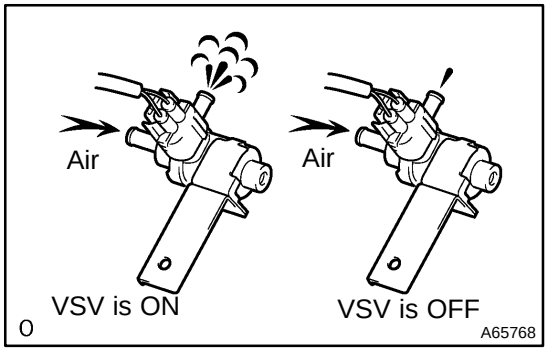

(g) Check the VSV for CCV operation when it is operated by the hand–held tester.
Result:
VSV is ON: Disconnected hose sucks.
VSV is OFF: Disconnected hose does not suck.

(h) Select the item ”TANK BYPASS VSV” in the ACTIVE TEST and operate the shift solenoid valves.

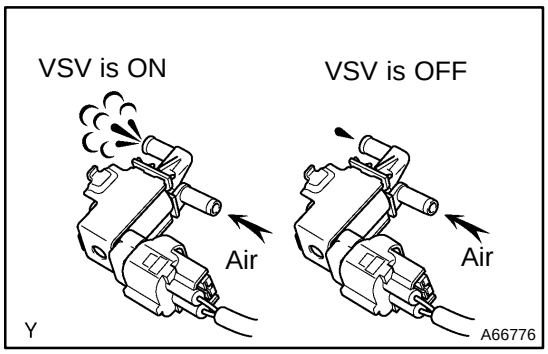

(i) Check the VSV for pressure switching valve operation when it is operated by the hand–held tester.
Result:
VSV is ON: Disconnected hose sucks.
VSV is OFF: Disconnected hose does not suck.

NG → **REPAIR OR REPLACE**

OK

2 PERFORM ACTIVE TEST BY EVAPORATIVE EMISSIONS LEAK

(a) Connect the hand–held tester to the DLC3.
(b) Select the ”EVAP SYS CHECK” mode on the hand–held tester.
(c) Perform ”EVAP SYS CHECK”.
DISPLAY:

A	B	C
Scan tool detects a leak on the fuel tank side.	Scan tool detects a leak on the canister side.	Scan tool does not detect a leak in the EVAP system.

B → **Go to step NO TAG**

C → **CHECK VACUUM HOSE**

A

3 CHECK FUEL TANK CAP ASSY(TOYOTA GENUINE PARTS)

(a) Replace to toyota genuine parts.
(b) After replace, perform ”EVAP SYS CHECK” by hand–held tester. (Go to step 2)

OK → **Go to step NO TAG**

NG

REPLACE TO TOYOTA GENUINE PARTS

4	CHECK FUEL TANK CAP FOR CORRECTLY INSTALLED

(a) Correctly install fuel tank cap.
(b) After install, perform ”EVAP SYS CHECK” by hand–held tester. (Go to step 2)

OK → Go to step NO TAG

NG

CORRECTLY INSTALL FUEL TANK CAP

5	INSPECT FUEL TANK CAP ASSY (See page 12–7)

(a) Replace to fuel tank cap assy.
(b) After replace, perform ”EVAP SYS CHECK” by hand–held tester. (Go to step 2)

OK → Go to step NO TAG

NG

REPLACE FUEL TANK CAP ASSY

6	CHECK FUEL TANK INLET PIPE SUB–ASSY(FOR DAMAGE)

(a) Remove the fuel tank cap.
(b) Visually inspect the fuel inlet pipe for damage.
(c) After repair or replace, perform ”EVAP SYS CHECK” by hand–held tester. (Go to step 2)

NG → REPLACE FUEL TANK INLET PIPE SUB–ASSY

OK

REPAIR OR REPLACE VACUUM HOSE

7	CHECK FUEL HOSE(VSV FOR PRESSURE SWITCHING VALVE–CHARCOAL CANISTER)

NG → REPAIR OR REPLACE

OK

8	CHECK EACH VSV CONNECTOR FOR LOOSENESS AND DISCONNECTION

NG → REPAIAR OR CONNECT VSV OR SENSOR CONNECTOR

OK

9	CHECK VACUUM HOSE(8, 9, 10 AND 11 IN FIG.1 IN CIRCUIT DESCRIPTION)

(a) Check that the vacuum hose is connected correctly.
(b) Check the vacuum hose for looseness and disconnection.
(c) Check the vacuum hose for cracks, hole, damage and blockage.

NG → **REPAIR OR REPLACE**

OK

10	INSPECT ECM(CHECK VOLTAGE)

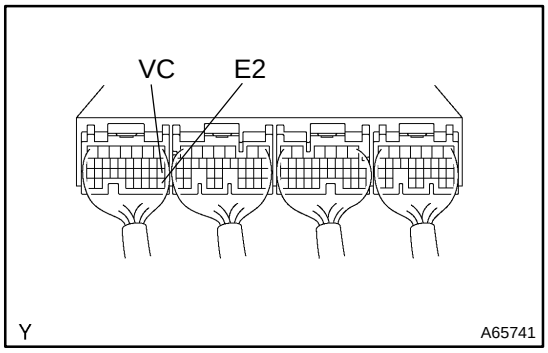

(a) Turn the ignition switch ON.
(b) Measure voltage between terminals VC and E2 of ECM E3 connector.
Voltage: 4.5 – 5.5 V

NG → **CHECK AND REPLACE ECM**

OK

11	INSPECT ECM(CHECK VOLTAGE)

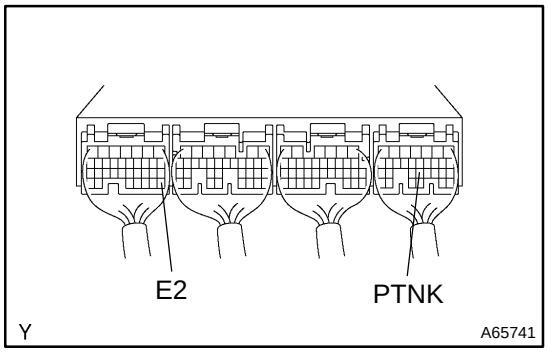

(a) Remove the fuel tank cap.
(b) Turn the ignition switch ON.
(c) Measure the voltage between terminals PTNK of the ECM E6 connector and E2 of the ECM E3 connector.
Voltage: 3.0 – 3.6 V

OK → **Go to step NO TAG**

NG

12	CHECK HARNESS AND CONNECTOR(VAPOR PRESSURE SENSOR–ECM)

NG → **REPAIR OR REPLACE HARNESS AND CONNECTOR**

OK

REPLACE VAPOR PRESSURE SENSOR ASSY

13	CHECK VACUUM HOSE(INTAKE MANIFOLD–VSV FOR EVAP, VSV FOR EVAP–CHARCOAL CANISTER)

(a) Check that the vacuum hose is connected correctly.
(b) Check the vacuum hose for looseness and disconnection.
(c) Check the vacuum hose for cracks, hole, damage and blockage.

NG → REPAIR OR REPLACE

OK

14	CHECK OPERATION OF VSV(FOR EVAP) (See page 12–1)

OK → Go to step NO TAG

NG

CHECK VACUUM HOSE

15	CHECK HARNESS AND CONNECTOR(E.F.I. RELAY–VSV FOR EVAP, VSV FOR EVAP–ECM)

NG → REPAIR OR REPLACE HARNESS AND CONNECTOR

OK

16	CHECK VACUUM HOSE(VSV FOR CCV–CHARCOAL CANISTER)

(a) Check that the vacuum hose is connected correctly.
(b) Check the vacuum hose for looseness and disconnection.
(c) Check the vacuum hose for cracks, hole damage and blockage.

NG → CORRECTLY INSTALL FUEL TANK CAP

OK

17	CHECK OPERATION OF VSV(FOR CCV) (See page 12–1)

OK → Go to step NO TAG

NG

REPLACE VSV AND CHARCOAL CANISTER, AND THEN CLEAN VACUUM HOSE

18	CHECK HARNESS AND CONNECTOR(E.F.I. RELAY–VSV FOR CCV, VSV FOR CCV–ECM)

NG → REPAIR OR REPLACE HARNESS AND CONNECTOR

OK

19	CHECK OPERATION OF VSV(FOR PRESSURE SWITCHING VALVE) (See page 12–1)

OK → Go to step NO TAG

NG

REPLACE VSV AND CHARCOAL CANISTER, AND THEN CLEAN VACUUM HOSE

20	CHECK HARNESS AND CONNECTOR(E.F.I. RELAY–VSV FOR PRESSURE SWITCHING VALVE, VSV FOR PRESS)

NG → REPAIR OR REPLACE HARNESS AND CONNECTOR

OK

21	PERFORM ACTIVE TEST BY HAND–HELD TESTER(FUEL TANK ASSY)

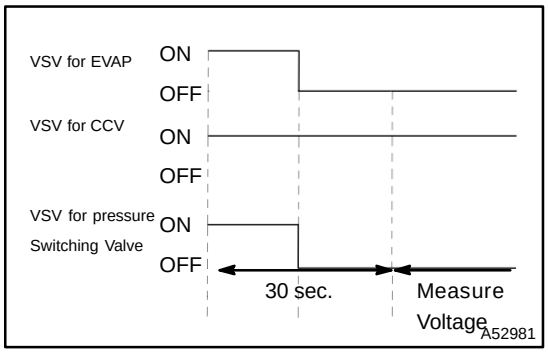

(a) Connect the hand–held tester to the DLC3.
(b) Select the ACTIVE TEST mode on the hand–held tester.
(c) Start the engine.
(d) Switch the VSV for the CCV ON by the hand–held tester.
(e) Switch the VSV for the EVAP OFF and the VSV for the pressure switching valve ON by the hand–held tester and it remains on for 30 sec.
(f) Measure the voltage between terminals PTNK and E2 of the ECM connectors after switching the VSV for the EVAP from OFF to ON, and the VSV for the pressure switching valve from ON to OFF.
Voltage: 2.5 V or less

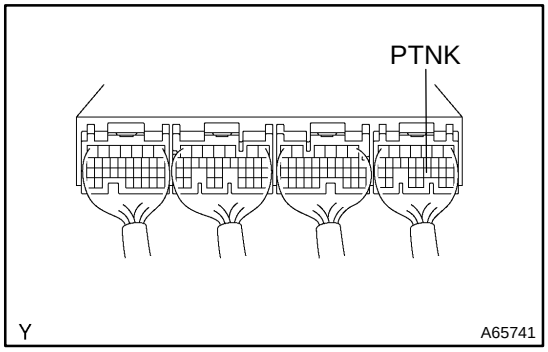

NG → REPLACE FUEL TANK ASSY

OK

22	PERFORM ACTIVE TEST BY HAND–HELD TESTER(CHARCOAL CANISTER ASSY)

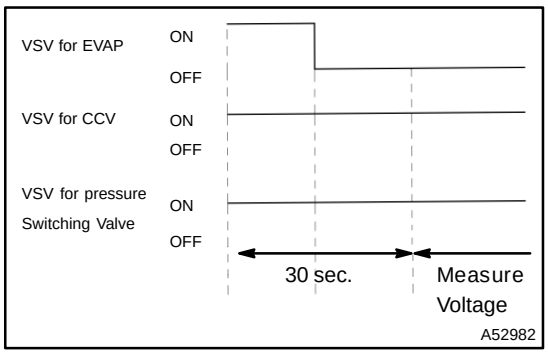

(a) Connect the hand–held tester to the DLC3.
(b) Select the ACTIVE TEST mode on the hand–held tester.
(c) Start the engine.
(d) Switch the VSV for the CCV ON by the hand–held tester.
(e) Switch the VSV for the EVAP OFF and the VSV for the pressure switching valve ON by the hand–held tester and it remains on for 30 sec.
(f) Measure the voltage between terminals PTNK and E2 of the ECM connectors after switching the VSV for the EVAP from OFF to ON.
Voltage: 2.5 V or less

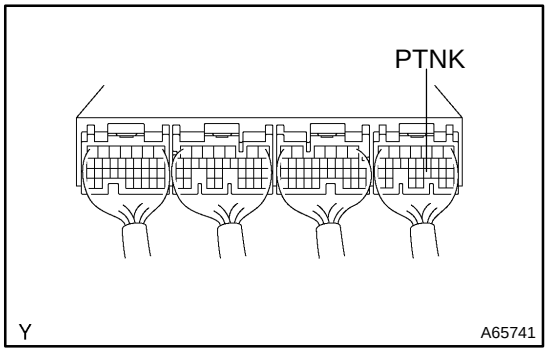

NG → **REPLACE CHARCOAL CANISTER ASSY**

OK

23	CHECK CHARCOAL CANISTER ASSY (See page 12–7)

NG → **REPLACE CHARCOAL CANISTER ASSY**

OK

24	CHECK FUEL TANK OVER FILL CHECK VALVE (See page 11–7)

NG → **REPLACE VSV AND CHARCOAL CANISTER, AND THEN CLEAN VACUUM HOSE**

OK

REPLACE CHARCOAL CANISTER ASSY

OBD II scan tool (excluding hand–held tester):

1	CHECK EVAPORATIVE EMISSIONS LEAK

NG → **REPAIR OR REPLACE**

OK

2	CHECK FUEL TANK CAP ASSY(TOYOTA GENUINE PARTS)

NG → REPLACE TO TOYOTA GENUINE PARTS

OK

3	CHECK FUEL TANK CAP FOR CORRECTLY INSTALLED

NG → CORRECTLY INSTALL FUEL TANK CAP

OK

4	CHECK FUEL TANK CAP ASSY (See page 12–7)

NG → REPLACE FUEL TANK CAP ASSY

OK

5	CHECK FUEL TANK INLET PIPE SUB–ASSY(FOR DAMAGE)

(a) Remove the fuel tank cap.
(b) Visually inspect the fuel inlet pipe for damage.

NG → REPLACE FUEL TANK INLET PIPE SUB–ASSY

OK

6	CHECK VACUUM HOSE(VAPOR PRESSURE SENSOR–FUEL TANK, CHARCOAL CANISTER–VSV FOR P)

NG → REPAIAR OR CONNECT VSV OR SENSOR CONNECTOR

OK

7	CHECK FUEL HOSE(FUEL TANK–CHARCOAL CANISTER)

NG → REPAIR OR REPLACE

OK

8	CHECK EACH VSV CONNECTOR FOR LOOSENESS AND DISCONNECTION

NG → REPAIAR OR CONNECT VSV OR SENSOR CONNECTOR

OK

9	CHECK VACUUM HOSE

(a) Check that the vacuum hose is connected correctly.
(b) Check the vacuum hose for looseness and disconnection.
(c) Check the vacuum hose for cracks, hole damage and blockage.

NG → **CHECK FUEL TANK OVER FILL CHECK VALVE**

OK

10	INSPECT ECM(VC–E2)

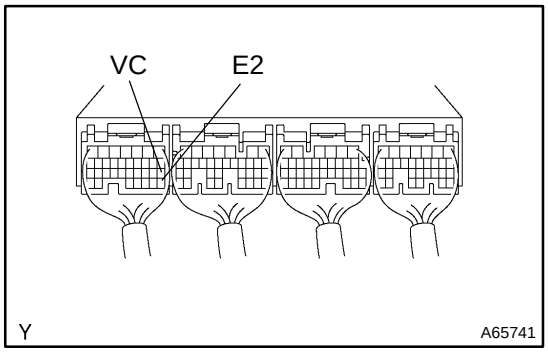

(a) Turn the ignition switch ON.
(b) Measure voltage between terminals VC and E2 of ECM E3 connector.
Voltage: 4.5 – 5.5 V

NG → **CHECK AND REPLACE ECM**

OK

11	INSPECT ECM(PTNK–E2)

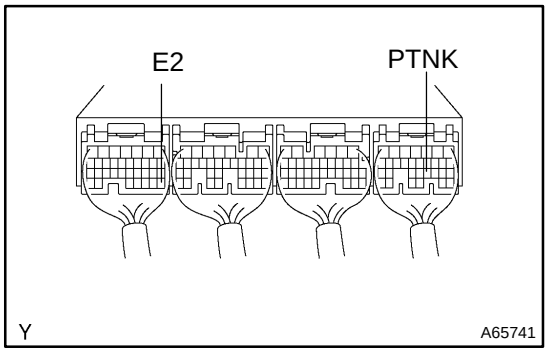

(a) Remove the fuel tank cap.
(b) Turn the ignition switch ON.
(c) Measure the voltage between terminals PTNK of the ECM E6 connector and E2 of the ECM E3 connector.
Voltage: 3.0 – 3.6 V

OK → **Go to step NO TAG**

NG

12	CHECK HARNESS AND CONNECTOR(VAPOR PRESSURE SENSOR–ECM)

NG → **REPAIR OR REPLACE HARNESS AND CONNECTOR**

OK

REPLACE VAPOR PRESSURE SENSOR ASSY

13	CHECK VSV(FOR EVAP)

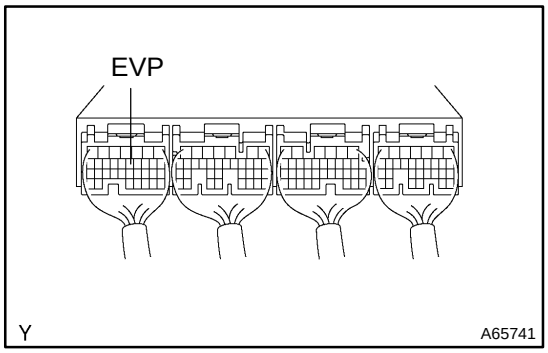

(a) Turn the ignition switch ON.
(b) Check the VSV function.
(1) Connect the terminal EVP of the ECM E3 connector and the body ground (VSV ON).
(2) Disconnect the terminal EVP of the ECM E3 connector and body ground (VSV OFF).

(1) VSV is ON:
Air from port E flows out through port F.
(2) VSV is OFF:
Air from port E flows out through port F with a little difficultly.

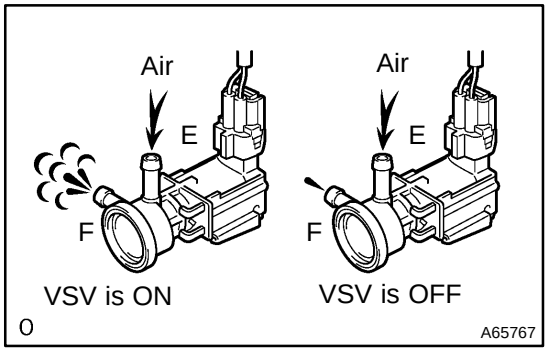

OK → **Go to step NO TAG**

NG

14	CHECK OPERATION OF VSV(FOR EVAP) (See page 12–1)

OK → **Go to step NO TAG**

NG

REPLACE VSV AND CHARCOAL CANISTER, AND THEN CLEAN VACUUM HOSE

15	CHECK HARNESS AND CONNECTOR(E.F.I. RELAY–VSV FOR EVAP, VSV FOR EVAP–ECM)

NG → **REPAIR OR REPLACE HARNESS AND CONNECTOR**

OK

CHECK AND REPLACE ECM

16	CHECK VSV(FOR CCV)

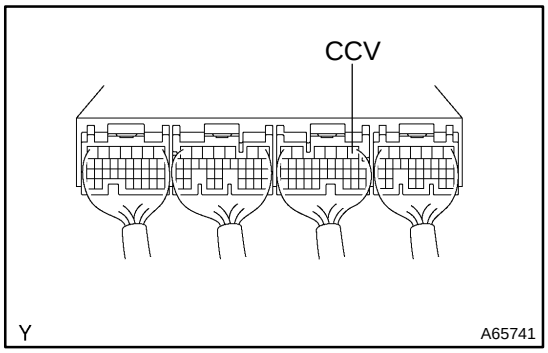

(a) Turn the ignition switch ON.
(b) Check the VSV function.
  (1) Connect the terminal CCV of the ECM E5 connector and the body ground (VSV ON).
  (2) Disconnect the terminal CCV of the ECM E5 connector and the body ground (VSV OFF).

VSV is ON: Air does not flow from port E to port F.
VSV is OFF: Air from port E flows out through port F.

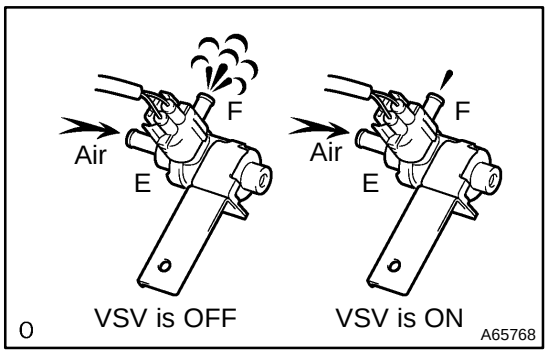

OK → **Go to step NO TAG**

NG

17	CHECK OPERATION OF VSV(FOR CCV) (See page 12–1)

OK → **Go to step NO TAG**

NG

REPLACE VSV AND CHARCOAL CANISTER, AND THEN CLEAN VACUUM HOSE

18	CHECK HARNESS AND CONNECTOR(E.F.I. RELAY–VSV FOR CCV, VSV FOR CCV–ECM)

NG → **REPAIR OR REPLACE HARNESS AND CONNECTOR**

OK

CHECK AND REPLACE ECM

19	CHECK VSV(FOR PRESSURE SWITCHING VALVE)

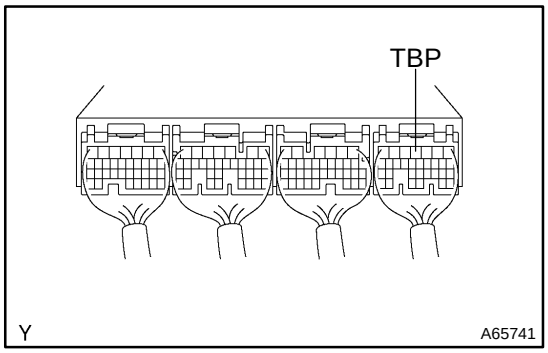

(a) Turn the ignition switch ON.
(b) Check the VSV function.
(1) Connect the terminal TBP of the ECM E6 connector and the body ground (VSV ON).
(2) Disconnect the terminal TBP of the ECM E6 connector and the body ground (VSV OFF).

(1) VSV is ON:
Air from port E flows out through port F.
(2) VSV is OFF:
Air does not flow from port E to port F.

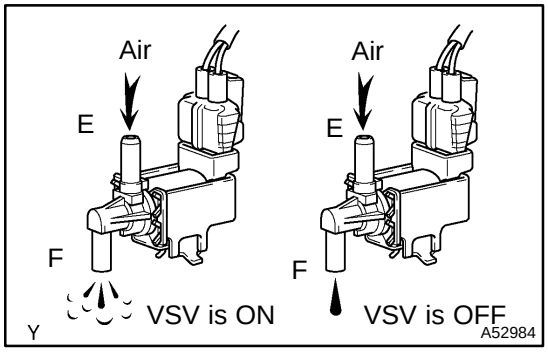

OK → **Go to step NO TAG**

NG

20	CHECK OPERATION OF VSV(FOR PRESSURE SWITCHING VALVE) (See page 12–7)

OK → **Go to step NO TAG**

NG

REPLACE VSV AND CHARCOAL CANISTER, AND THEN CLEAN VACUUM HOSE

21	CHECK HARNESS AND CONNECTOR(E.F.I. RELAY–VSV FOR PRESSURE SWITCHING VALVE, VSV FOR PRESS)

NG → **REPAIR OR REPLACE HARNESS AND CONNECTOR**

OK

CHECK AND REPLACE ECM

22	CHECK FUEL TANK OVER FILL CHECK VALVE

NG → REPLACE FUEL TANK OVER FILL CHECK VALVE OR FUEL TANK

OK

CHECK AND REPLACE ECM

DTC	P0450	EVAPORATIVE EMISSION CONTROL SYSTEM PRESSURE SENSOR MALFUNCTION

DTC	P0451	EVAPORATIVE EMISSION CONTROL SYSTEM PRESSURE SENSOR RANGE/PERFORMANCE

CIRCUIT DESCRIPTION

The vapor pressure sensor, VSV for Canister Closed Valve (CCV) and VSV for pressure switching valve are used to detect abnormalities in the evaporative emission control system.

The ECM decides whether or not there is an abnormality in the evaporative emission control system by the vapor pressure sensor signal.

DTC P0450 or P0451 is recorded by the ECM when the vapor pressure sensor malfunctions.

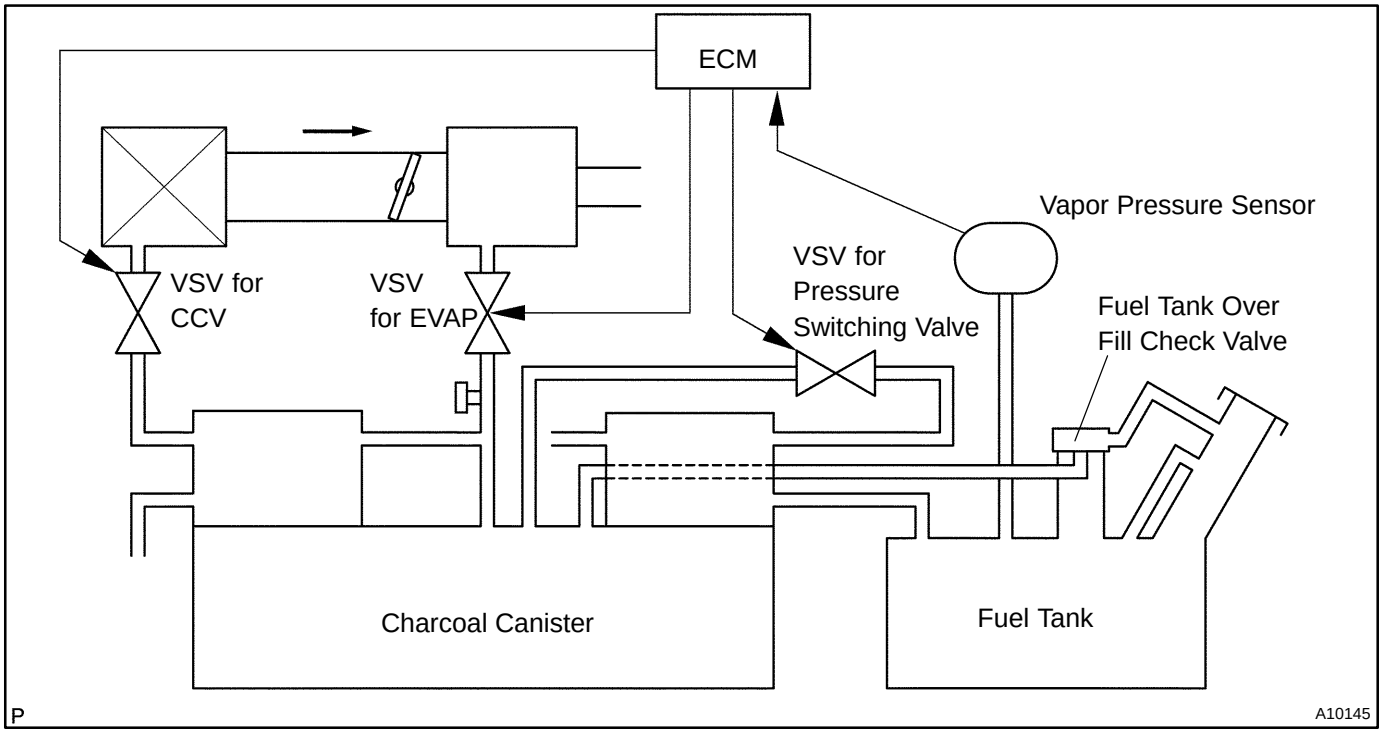

DTC No.	DTC Detecting Condition	Trouble Area
P0450	10 seconds or less after engine starting condition (a) or (b) continues for 7 seconds or more: (2 trip detection logic) (e) Vapor pressure sensor value < –4.0 kPa (–30 mmHg, –1.2 in.Hg) (f) Vapor pressure sensor value ≧ 2.0 kPa (15 mmHg, 0.6 in.Hg)	• Open or short in vapor pressure sensor circuit • Vapor pressure sensor • ECM
P0451	Vapor pressure sensor output extremely changes under conditions of (a) or (b): (2 trip detection logic) (g) Vehicle speed: 0 km/h (0mph), Engine speed: Idling and VSV for pressure switching valve is OFF (h) High vapor pressure sensor	

WIRING DIAGRAM

Refer to DTC P0440 on page 05–84.

INSPECTION PROCEDURE

HINT:

- If DTC P0441, P0446, P0450 or P0451 is output after DTC P0440, first troubleshoot DTC P0441, P0446 P0450 or P0451. If no other malfunctions than them are detected, troubleshoot DTC P0440 next.
- Read freeze frame data using the hand–held tester or OBD II scan tool, as freeze frame data records the engine conditions when the malfunction is detected. When troubleshooting, it is useful for determining whether the vehicle was running or stopped, the engine was warmed up or not, the air–fuel ratio was lean or rich, etc. at the time of the malfunction.

1 INSPECT ECM(CHECK VOLTAGE)

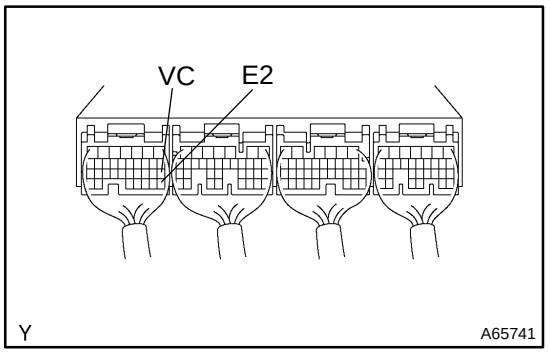

(a) Turn the ignition switch ON.
(b) Measure voltage between terminals VC and E2 of ECM E3 connector.
Voltage: 4.5 – 5.5 V

NG → **CHECK AND REPLACE ECM**

OK

2 INSPECT ECM(CHECK VOLTAGE)

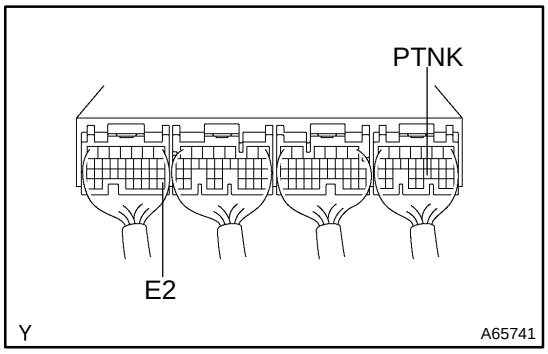

(a) Remove the fuel tank cap.
(b) Turn the ignition switch ON.
(c) Measure the voltage between terminals PTNK of the ECM E6 connector and E2 of the ECM E3 connector.
Voltage: 3.0 – 3.6 V

OK → **CHECK AND REPLACE ECM**

NG

3 CHECK HARNESS AND CONNECTOR(VAPOR PRESSURE SENSOR–ECM)

NG → **REPAIR OR REPLACE HARNESS AND CONNECTOR**

OK

REPLACE VAPOR PRESSURE SENSOR ASSY

DTC	P0500	VEHICLE SPEED SENSOR MALFUNCTION

CIRCUIT DESCRIPTION

The vehicle speed sensor outputs a 4–pulse signal for every revolution of the rotor shaft, which is rotated by the transmission output shaft via the driven gear. After this signal is converted into a more precise rectangular waveform by the waveform shaping circuit inside the combination meter, it is then transmitted to the ECM. The ECM determines the vehicle speed based on the frequency of these pulse signals.

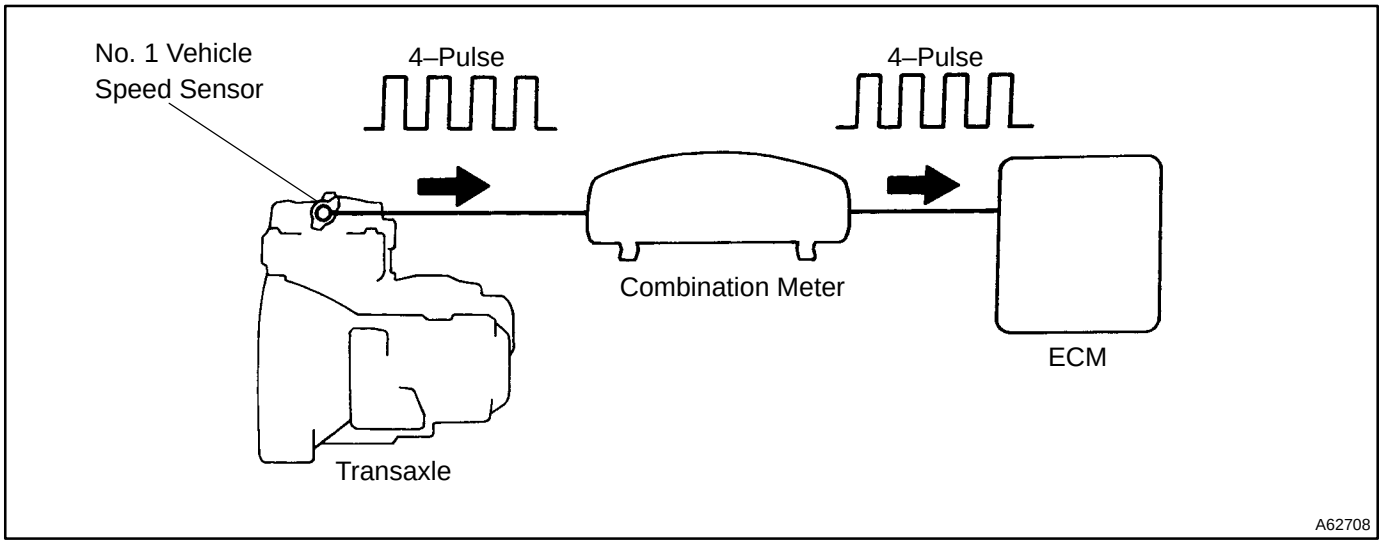

DTC No.	DTC Detecting Condition	Trouble Area
P0500	During vehicle is being driven, no vehicle speed sensor signal to ECM (2 trip detection logic)	• Combination meter • Open or short in vehicle speed sensor circuit • Vehicle speed sensor • ECM

WIRING DIAGRAM

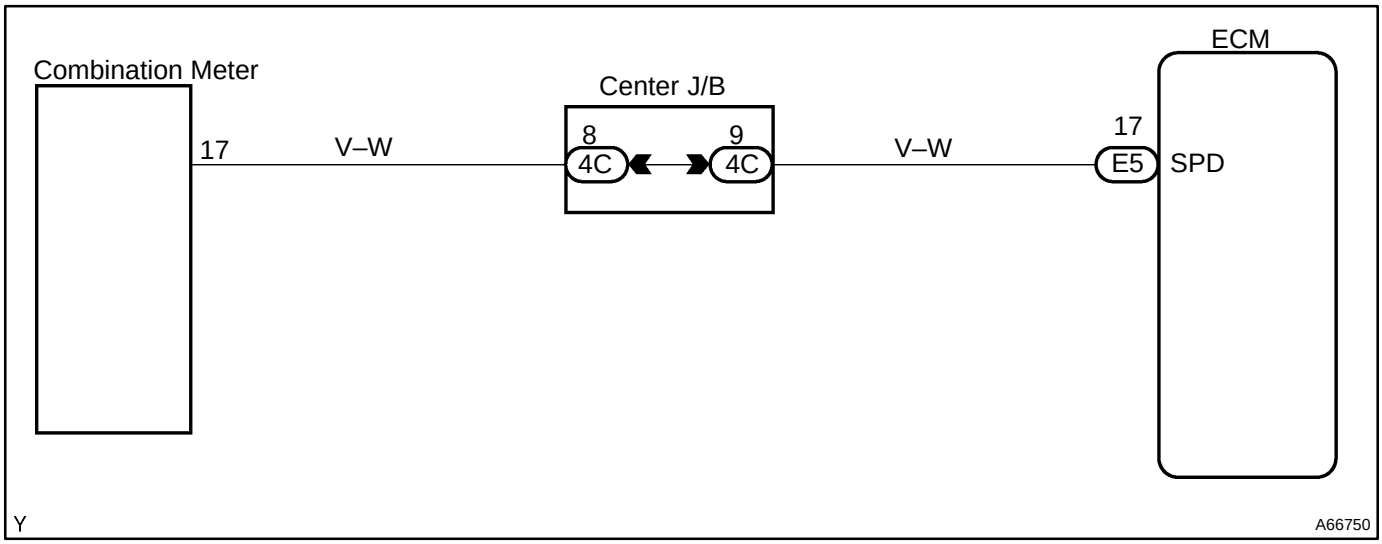

INSPECTION PROCEDURE

HINT:

HINT:Read freeze frame data using the hand–held tester or OBD II scan tool, as freeze frame data records the engine conditions when the malfunction is detected. When troubleshooting, it is useful for determining whether the vehicle was running or stopped, the engine was warmed up or not, the air–fuel ratio was lean or rich, etc. at the time of the malfunction.

1	CHECK OPERATION OF SPEEDOMETER

(a) Drive the vehicle and check if the operation of the speedometer in the combination meter is normal.

HINT:

The vehicle speed sensor is operating normally if the speedometer display is normal.

NG → **CHECK SPEEDOMETER CIRCUIT**

OK

2	INSPECT ECM

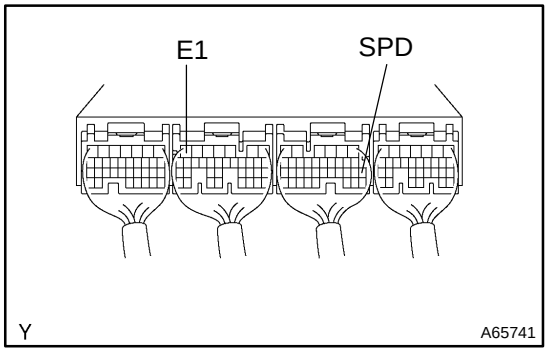

(a) Shift the lever to the neutral position.
(b) Jack up the vehicle.
(c) Turn the ignition switch ON.
(d) Measure the voltage between terminal SPD of the ECM connector and E1 of the ECM connector with turning the wheel slowly.
Voltage: Generated intermittently

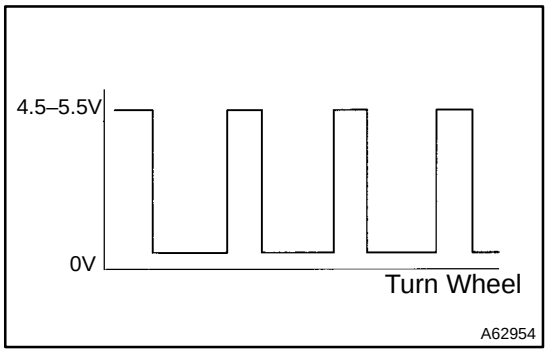

NG → **REPAIR OR REPLACE HARNESS AND CONNECTOR**

OK

CHECK AND REPLACE ECM

DTC P0505 IDLE CONTROL SYSTEM MALFUNCTION

CIRCUIT DESCRIPTION

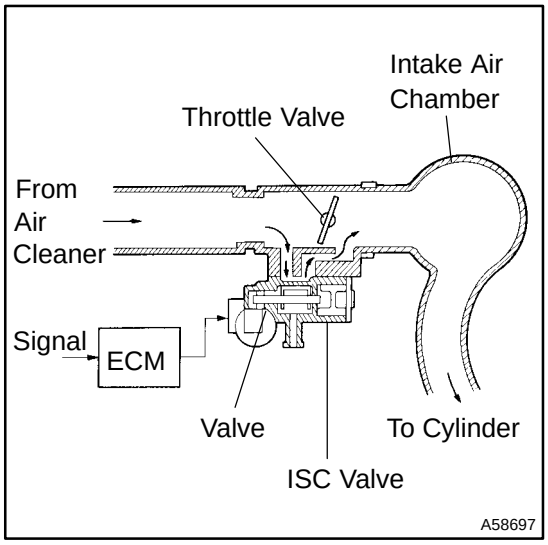

The rotary solenoid type ISC valve is located under the throttle body and intake air bypassing the throttle valve is directed to the ISC valve through the passage.
In this way the intake air volume bypassing the throttle valve is regulated, controlling the engine speed.
The ECM operates the ISC valve only to perform idle–up and provide feedback for the target idling speed.

DTC No.	DTC Detecting Condition	Trouble Area
P0505	Idle speed continues to be apart greatly from target speed	• PCV hose • Open or short in ISC valve circuit • ISC valve is stuck or closed • Open or short in A/C switch circuit • Air induction system • ECM

WIRING DIAGRAM

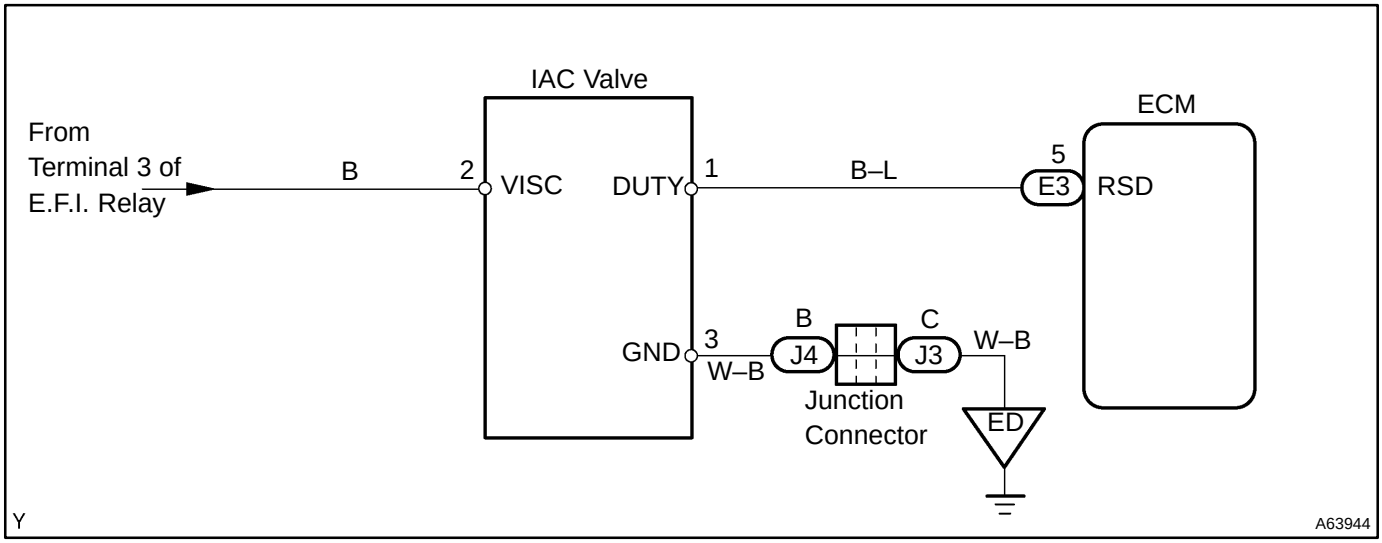

INSPECTION PROCEDURE

HINT:
Read freed frame data using hand–held tester. Because freeze frame records the engine conditions when the malfunction is detected, when troubleshooting it is useful for determining whether the vehicle was running or stopped, the engine warmed up or not, the air–fuel ratio lean or rich, etc. at the time of the malfunction.

1	PERFORM ACTIVE TEST BY OBD II SCAN TOOL OR HAND–HELD TESTER(CHECK OPERATION OF THE ISC VALVE)

(a) Warm up the engine to the normal operating temperature.
(b) Switch off all the accessories.
(c) Switch off the A/C.
(d) Shift the lever into the neutral position.
(e) Connect the hand–held tester or OBD II scan tool to the DLC3 on the vehicle.
(f) Check the difference of the engine speed in less than 5 seconds and more than 5 seconds.
Difference of engine speed: More than 100 rpm.

OK → **CHECK FOR INTERMITTENT PROBLEMS**

NG

2	CHECK CONNECTION OF PCV HOSE

NG → **REPAIR OR REPLACE PCV HOSE**

OK

3	CHECK HARNESS AND CONNECTOR

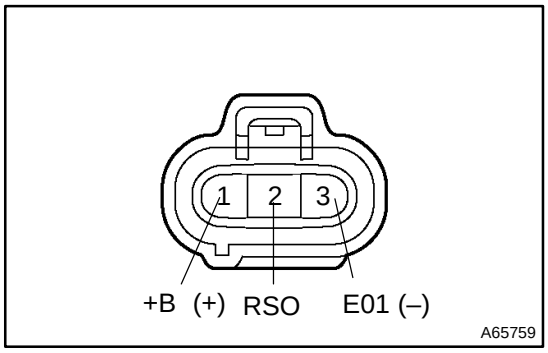

(a) Disconnect the ISC valve connector.
(b) Turn the ignition switch ON.
(c) Measure voltage between terminals +B and E01 of the ISC valve connector.
Voltage: 9 – 14 V

OK → **REPAIR OR REPLACE HARNESS AND CONNECTOR**

NG

4	CHECK HARNESS AND CONNECTOR(RSO CIRCUIT)

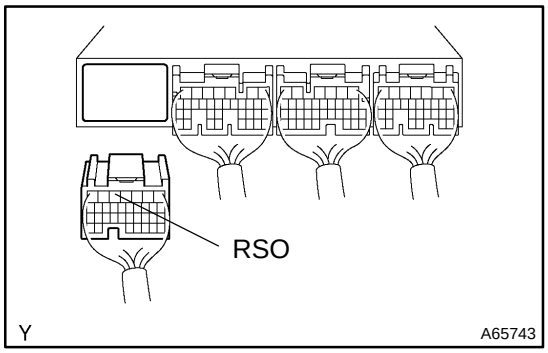

(a) Disconnect the ECM E3 connector.
(b) Check continuity between the terminals RSO of the ECM connector and RSO of the ISC valve connector.
Resistance: 1 Ω or less
(c) Check for short between the terminals RSO of the ECM connector and GND of the ISC valve connector.
Resistance: 1 MΩ or more

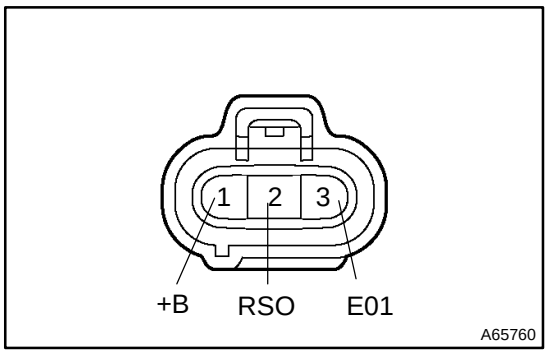

NG → **REPAIR OR REPLACE HARNESS AND CONNECTOR**

OK

5	INSPECT THLOTTLE BODY IDLE SPEED CONTROL VALVE ASSY (See page 10–2)

NG → **REPLACE THLOTTLE BODY IDLE SPEED CONTROL VALVE ASSY**

OK

CHECK AND REPLACE ECM

STARTER SIGNAL CIRCUIT

CIRCUIT DESCRIPTION

When the engine is cranked, the intake air flow is slow, so fuel vaporization is poor. A rich mixture is therefore necessary in order to achieve good startability. While the engine is being cranked, the battery voltage is applied to terminal STA of the ECM. The starter signal is mainly used to increase the fuel injection volume for the starting injection control and after–start injection control.

WIRING DIAGRAM

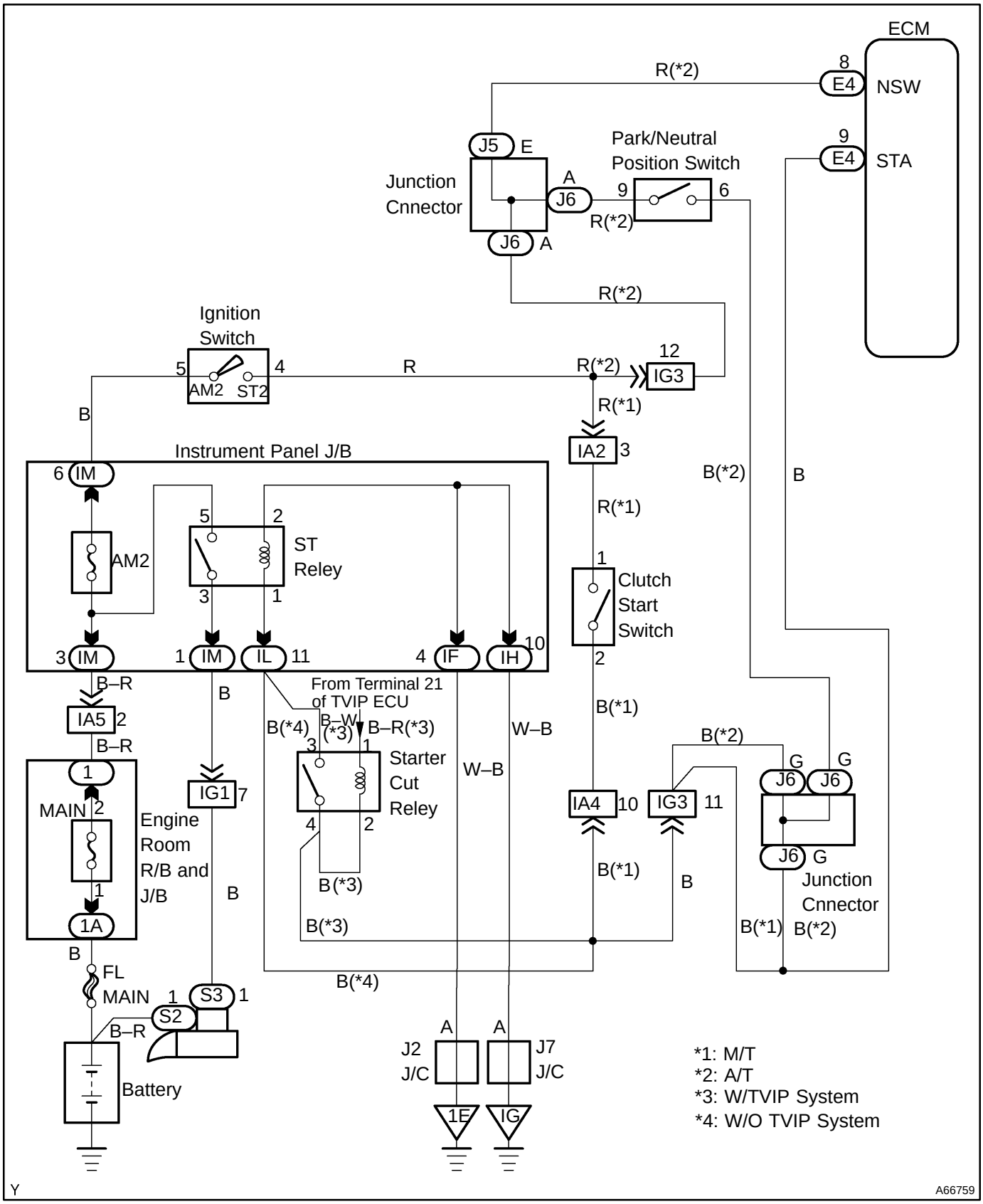

INSPECTION PROCEDURE

HINT:

This diagnostic chart is based on the premise that the engine is cranked normally. If the engine is not cranked, proceed to the problem symptoms table on page .

Hand–held tester:

1	READ VALUE OF HAND–HELD TESTER(STARTER SIGNAL)

(a) Connect the hand–held tester to the DLC3.
(b) Turn the ignition switch ON and push the hand–held tester main switch ON.
(c) Select the item ”STARTER SIG” in the DATALIST and read its value displayed on or hand–held tester.
(d) Read the STA signal on the hand–held tester while the starter is operating.

Result:

Ignition Switch Position	ON	START
STA Signal	OFF	ON

OK → **PROCEED TO NEXT CIRCUIT INSPECTION SHOWN ON PROBLEM SYMPTOMS TABLE**

NG

2	CHECK WIRE HARNESS OR CONNECTOR(ECM–STARTER RELAY)

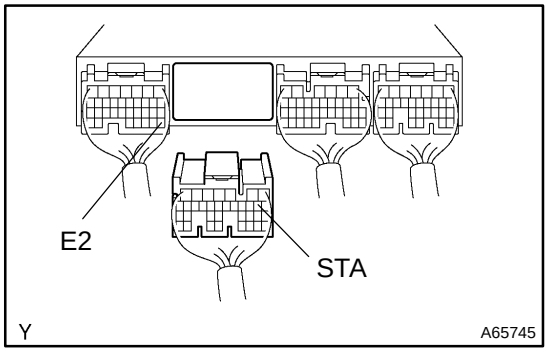

(a) Disconnect the ECM E4 connector.
(b) Remove the starter relay.
(c) Check continuity between the terminals STA of the ECM connector and 1 of the starter relay connector side.
Resistance: 1 Ω or less
(d) Check for short between the terminals STA of the ECM connector and E2 of the ECM connector.
Resistance: 1 MΩ or more

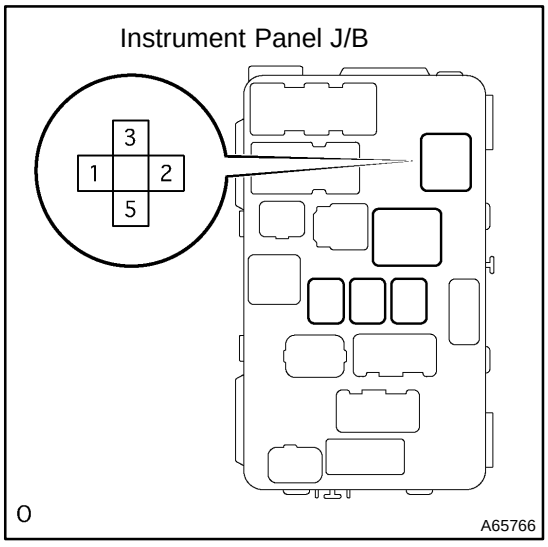

NG	REPAIR OR REPLACE WIRE HARNESS OR CONNECTOR

OK

CHECK AND REPLACE ECM

OBD II scan tool (excluding hand–held tester):

1	INSPECT ECM(CHECK VOLTAGE)

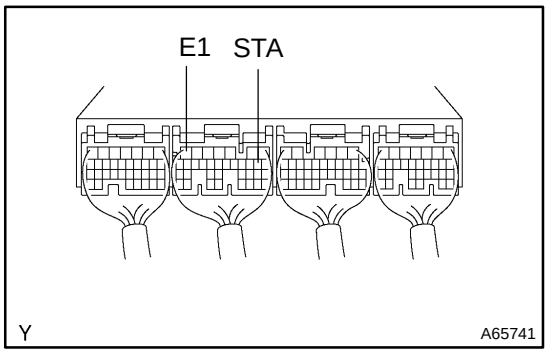

(a) Turn the ignition switch ON.
(b) Measure the voltage between terminal STA of the ECM connector and E1 of the ECM connector, during the engine cranking.
Voltage: 6 V or more

OK	PROCEED TO NEXT CIRCUIT INSPECTION SHOWN ON PROBLEM SYMPTOMS TABLE

NG

2	CHECK WIRE HARNESS OR CONNECTOR(ECM–STARTER RELAY)

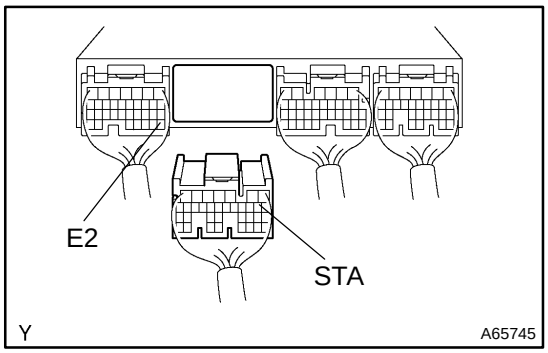

(a) Disconnect the ECM E4 connector.
(b) Remove the starter relay.
(c) Check continuity between the terminals STA of the ECM connector and 1 of the starter relay connector side.
Resistance: 1 Ω or less
(d) Check for short between the terminals STA of the ECM connector and E2 of the ECM connector.
Resistance: 1 MΩ or more

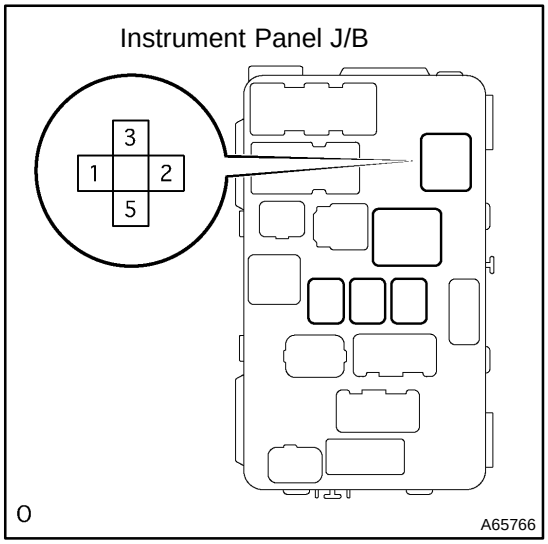

NG → REPAIR OR REPLACE WIRE HARNESS OR CONNECTOR

OK

CHECK AND REPLACE ECM

057HC–02

CUSTOMER PROBLEM ANALYSIS CHECK

ENGINE CONTROL SYSTEM Check Sheet

Inspector's Name _____

Customer's Name		Model and Model Year	
Driver's Name		Frame No.	
Data Vehicle Brought in		Engine Model	
License No.		Odometer Reading	km / miles

Problem Symptoms	☐ Engine does not Start	☐ Engine does not crank ☐ No initial combustion ☐ No complete combustion
	☐ Difficult to Start	☐ Engine cranks slowly ☐ Other _____
	☐ Poor Idling	☐ Incorrect first idle ☐ Idling rpm is abnormal ☐ High (rpm) ☐ Low (rpm) ☐ Rough idling ☐ Other _____
	☐ Poor Drivability	☐ Hesitation ☐ Back fire ☐ Muffler explosion (after–fire) ☐ Surging ☐ Knocking ☐ Other _____
	☐ Engine Stall	☐ Soon after starting ☐ After accelerator pedal depressed ☐ After accelerator pedal released ☐ During A/C operation ☐ Shifting from N to D ☐ Other _____
	☐ Others	

Datas Problem Occurred		
Problem Frequency		☐ Constant ☐ Sometimes (times per day/month) ☐ Once only ☐ Other _____
Condition When Problem Occurs	Weather	☐ Fine ☐ Cloudy ☐ Rainy ☐ Snowy ☐ Various/Other _____
	Outdoor Temperature	☐ Hot ☐ Warm ☐ Cool ☐ Cold (approx. ____˚F/____˚C)
	Place	☐ Highway ☐ Suburbs ☐ Inner City ☐ Uphill ☐ Downhill ☐ Rough road ☐ Other _____
	Engine Temp.	☐ Cold ☐ Warming up ☐ After Warming up ☐ Any temp. ☐ Other _____
	Engine Operation	☐ Starting ☐ Just after starting (min.) ☐ Idling ☐ Racing ☐ Driving ☐ Constant speed ☐ Acceleration ☐ Deceleration ☐ A/C switch ON/OFF ☐ Other _____

Condition of check engine warning light (CHK ENG)		☐ Remains on ☐ Sometimes light up ☐ Does not light up
DTC Inspection	Normal mode (Precheck)	☐ Normal ☐ Malfunction code(s) (code) ☐ Freezed frame data ( )
	Check Mode	☐ Normal ☐ Malfunction code(s) (code) ☐ Freezed frame data ( )

057HE–02

DIAGNOSTIC TROUBLE CODE CHART

HINT:

Parameters listed in the chart may not be exactly the same as your reading due to the type of instrument or other factors.

If a malfunction code is displayed during the DTC check in the check mode, check the circuit for the codes listed in the table below. For details of each code, turn to the page referred to under the ”See page” for the respective ”DTC No.” in the DTC chart.

DTC No. (See page)	Detection Item	Trouble Area	MIL *1	Memory
P0100 (05–25)	Mass Air Flow Circuit Malfunction	• Open or short in air flow meter circuit • Air flow meter • ECM	○	○
P0101 (05–30)	Mass Air Flow Circuit Range/ Performance Problem	• ECM	○	○
P0110 (05–31)	Intake Air Temp. Circuit Malfunction	• Open or short in intake air temp. sensor circuit • Intake air temp. sensor (built into air flow meter) • ECM	○	○
P0115 (05–34)	Engine Coolant Temp. Circuit Malfunction	• Open or short in water temp. sensor circuit • Water temp. sensor • ECM	○	○
P0116 (05–37)	Engine Coolant Temp. Circuit Range/Performance Problem	• Water temp. sensor • Cooling system • Thermostat	○	○
P0120 (05–38)	Throttle / Pedal Position Sensor / Switch ”A” Circuit Malfunction	• Open or short in throttle position sensor circuit • Throttle position sensor • ECM	○	○
P0121 (05–43)	Throttle / Pedal Position Sensor / Switch ”A” Circuit Range / Performance Problem.	• Throttle position sensor	○	○
P0125 (05–44)	Insufficient Coolant Temp. for Closed Loop Fuel Control	• PCV hose • Open or short in oxygen sensor circuit • Oxygen sensor • Air induction system • Fuel pressure • Injector • Gas leakage on exhaust system • ECM	○	○
P0128 (05–49)	Thermostat Malfunction	• Thermostat • Cooling system • Engine coolant temperature sensor • ECM	○	○
P0130 (05–51)	Heated Oxygen Sensor Circuit Malfunction (Bank 1 Sensor 1)	• Open or short in oxygen sensor circuit • Oxygen sensor • Air induction system • Fuel pressure • Injector • ECM	○	○
P0133 (05–56)	Heated Oxygen Sensor Slow Response (Bank 1 Sensor 1)	• Open or short in oxygen sensor circuit • Oxygen sensor • Air induction system • Fuel pressure • Injector • ECM	○	○

P0135 (05–60)	Heated Oxygen Sensor Heater Circuit Malfunction (Bank 1 Sensor 1)	• Open or short in heater circuit of oxygen sensor • Oxygen sensor heater • ECM	○	○
P0136 (05–51)	Heated Oxygen Sensor Circuit Malfunction (Bank 1 Sensor 2)	• Open or short in oxygen sensor circuit • Oxygen sensor	○	○
P0141 (05–60)	Heated Oxygen Sensor Heater Circuit Malfunction (Bank 1 Sensor 2)	• Open or short in heater circuit of oxygen sensor • Oxygen sensor heater • ECM	○	○
P0171 (05–64)	System too Lean (Fuel Trim) (Bank 1)	• Air induction system • PCV hose • Injector blockage • Mass air flow meter • Engine coolant temp. sensor • Fuel pressure • Gas leakage on exhaust system • Open or short in oxygen sensor circuit • Oxygen sensor • ECM	○	○
P0172 (05–64)	System too Rich (Fuel Trim) (Bank 1)	• Injector leak, blockage • Mass air flow meter • Engine coolant temp. sensor • Ignition system • Fuel pressure • Gas leakage on exhaust system • Open or short in oxygen sensor circuit • Gas leakage on exhaust system • Oxygen sensor • ECM	○	○
P0300 (05–68)	Random/Multiple Cylinder Misfire Detected	• Open or short in engine wire • Connector connection • Vacuum hose connection • PCV hose • Ignition system • Injector • Fuel pressure • Mass air flow meter • Engine coolant temp. sensor • Compression pressure • Valve clearance • Valve timing • ECM	○	○
P0301 (05–68)	Cylinder 1 Misfire Detected			
P0302 (05–68)	Cylinder 2 Misfire Detected			
P0303 (05–68)	Cylinder 3 Misfire Detected			
P0304 (05–68)	Cylinder 4 Misfire Detected			
P0325 (05–73)	Knock Sensor 1 Circuit Malfunction (Bank 1)	• Open or short in knock sensor circuit • Knock sensor (looseness) • ECM	○	○
P0335 (05–76)	Crankshaft Position Sensor ”A” Circuit Malfunction	• Open or short in crankshaft position sensor circuit • Crankshaft position sensor • Crank angle sensor plate • ECM	○	○
P0340 (05–79)	Camshaft Position Sensor Circuit Malfunction	• Open or short in camshaft position sensor circuit • Camshaft position sensor • Intake camshaft • ECM	○	○
P0420 (05–81)	Catalyst System Efficiency Below Threshold (Bank 1)	• Gas leakage on exhaust system • Oxygen sensor • Three–way catalytic converter	○	○

P0440 (05–84)	Evaporative Emission Control System Malfunction	• Hose or tube cracked, hole, damaged or loose seal • Fuel tank cap incorrectly installed • Fuel tank cap cracked or damaged • Vacuum hose cracked, hole, clocked, damaged or disconnected • Fuel tank cracked, hole or damaged • Charcoal canister cracked, hole or damaged • Open or short in vapor pressure sensor circuit • Vapor pressure sensor • Fuel tank over fill check valve cracked or damaged • ECM	○	○
P0441 (05–93)	Evaporative Emission Control System Incorrect Purge Flow	• Vacuum hose cracked, hole, blocked damaged or disconnected • Fuel tank cap incorrectly installed • Fuel tack cap cracked or damaged • Open or short in vapor pressure sensor circuit • Vapor pressure sensor • Open or short in VSV circuit for EVAP • VSV for CCV • Open or short in VSV circuit for vapor pressure sensor • VSV for vapor pressure sensor • Charcoal canister cracked, hole or damaged • Fuel tack over full check valve cracked or damaged • ECM	○	○
P0442 (05–84)	Evaporative Emission Control System Malfunction	• Same as DTC No. P0440	○	○
P0446 (05–84)	Evaporative Emission Control System Malfunction	• Same as DTC No. P0441	○	○
P0450 (05–108)	Evaporative Emission Control System Pressure Sensor Malfunction	• Open or short in vapor pressure sensor circuit • Vapor pressure sensor • ECM	○	○
P0451 (05–108)	Evaporative Emission Control System Pressure Sensor Range / Performance	• Open or short in vapor pressure sensor circuit • Vapor pressure sensor • ECM	○	○
P0500 (05–110)	Vehicle Speed Sensor Malfunction	• Combination meter • Open or short in vehicle speed sensor circuit • Vehicle speed sensor • ECM	○	○
P0505 (05–112)	Idle Control System Malfunction	• Open or short in ISC valve circuit • PCV hose • ISC valve is stick or closed*2 • A/C switch circuit • Air induction system*2 • ECM	○	○
P1300 (05–115)	Igniter Circuit Malfunction (No. 1)	• Ignition system • Open or short in IGF or IGT1 circuit from No. 1 ignition coil with igniter to ECM • No. 1 ignition coil with igniter • ECM	○	○
P1305 (05–115)	Igniter Circuit Malfunction (No. 2)	• Ignition system • Open or short in IGF or IGT2 circuit from No. 2 ignition coil with igniter to ECM • No. 2 ignition coil with igniter • ECM	○	○

P1310 (05–115)	Igniter Circuit Malfunction (No. 3)	• Ignition system • Open or short in IGF or IGT3 circuit from No. 3 ignition coil with igniter to ECM • No. 3 ignition coil with igniter • ECM	○	○
P1315 (05–115)	Igniter Circuit Malfunction (No. 4)	• Ignition system • Open or short in IGF or IGT4 circuit from No. 4 ignition coil with igniter to ECM • No. 4 ignition coil with igniter • ECM	○	○
P1335 (05–121)	Crankshaft Position Sensor Circuit Malfunction (During engine running)	• Open or short in crankshaft position sensor circuit • Crankshaft position sensor • Crank angle sensor plate • ECM	–	○
P1346 (05–122)	VVT Sensor/Camshaft Position Sensor Circuit Range/Performance Problem (Bank 1)	• Mechanical system (Jumping teeth of timing chain, chain stretched) • ECM	○	○
P1349 (05–123)	VVT System Malfunction (Bank 1)	• Valve timing • OCV • VVT controller assembly • ECM	○*2	○
P1520*2 (05–128)	Stop Light Switch Circuit Malfunction	• Open or short in stop light switch signal circuit • Stop light switch • ECM	○	○
P1600 (05–132)	Back–Up Power Source Circuit Malfunction	• Open in back up power source circuit • ECM	○	○
P1656 (05–135)	OCV Circuit Malfunction (Bank 1)	• Open or short in OCV circuit • OCV • ECM	○	○
P1780*2 (05–138)	Park / Neutral Position Switch Malfunction	• Short in neutral start switch circuit • Neutral start switch • ECM	○	○

*1: ○ ... MIL light up.
*2: Only for A/T models.

SFI SYSTEM (1ZZ–FE)

057HB–02

HOW TO PROCEED WITH TROUBLESHOOTING

1	VEHICLE BROUGHT TO WORKSHOP

2	CUSTOMER PROBLEM ANALYSIS (See page 05–4)

3	CONNECT THE HAND–HELD TESTER TO DLC3

HINT:
If the display indicates a communication fault in the tool, inspect DLC3.

4	CHECK DTC AND FREEZED FRAME DATA (See page 05–5)

HINT:
Record or print DTC and Freezed Frame Data, if needed.

5	CLEAR DTC AND FREEZED FRAME DATA (See page 05–5)

6	VISUAL INSPECTION

7	SETTING THE CHECK (TEST) MODE DIAGNOSIS (See page 05–5)

8	PROBLEM SYMPTOM CONFIRMATION

HINT:
If the engine does not start, perform step 10 and 12 first.

A	Malfunction does not occur
B	Malfunction occurs

B → GO TO STEP 10

A

9	SYMPTOM SIMULATION

10	DTC CHECK (See page 05–5)

A	Malfunction code
B	No code

B → GO TO STEP 12

A

11	DTC CHART (See page 05–5)

GO TO STEP 14

12	BASIC INSPECTION (See page 05–5)

A	Not confirm wrong parts
B	Confirm wrong parts

B → GO TO STEP 17

A

13	PROBLEM SYMPTOMS TABLE (See page 05–23)

A	Confirm wrong circuit
B	Confirm wrong Parts

B → GO TO STEP 17

A

14	CHECK ECM POWER SOURCE CIRCUIT (See page 05–148)

15	CIRCUIT INSPECTION

A	Not confirm malfunction
B	Confirm malfunction

B → GO TO STEP 18

A

16	CHECK FOR INTERMITTENT PROBLEMS (See page 05–5)

GO TO STEP 18

17	PARTS INSPECTION

18	IDENTIFICATION OF PROBLEM

19	ADJUSTMENT, REPAIR

20	CONFIRMATION TEST

END

057HF–02

LOCATION

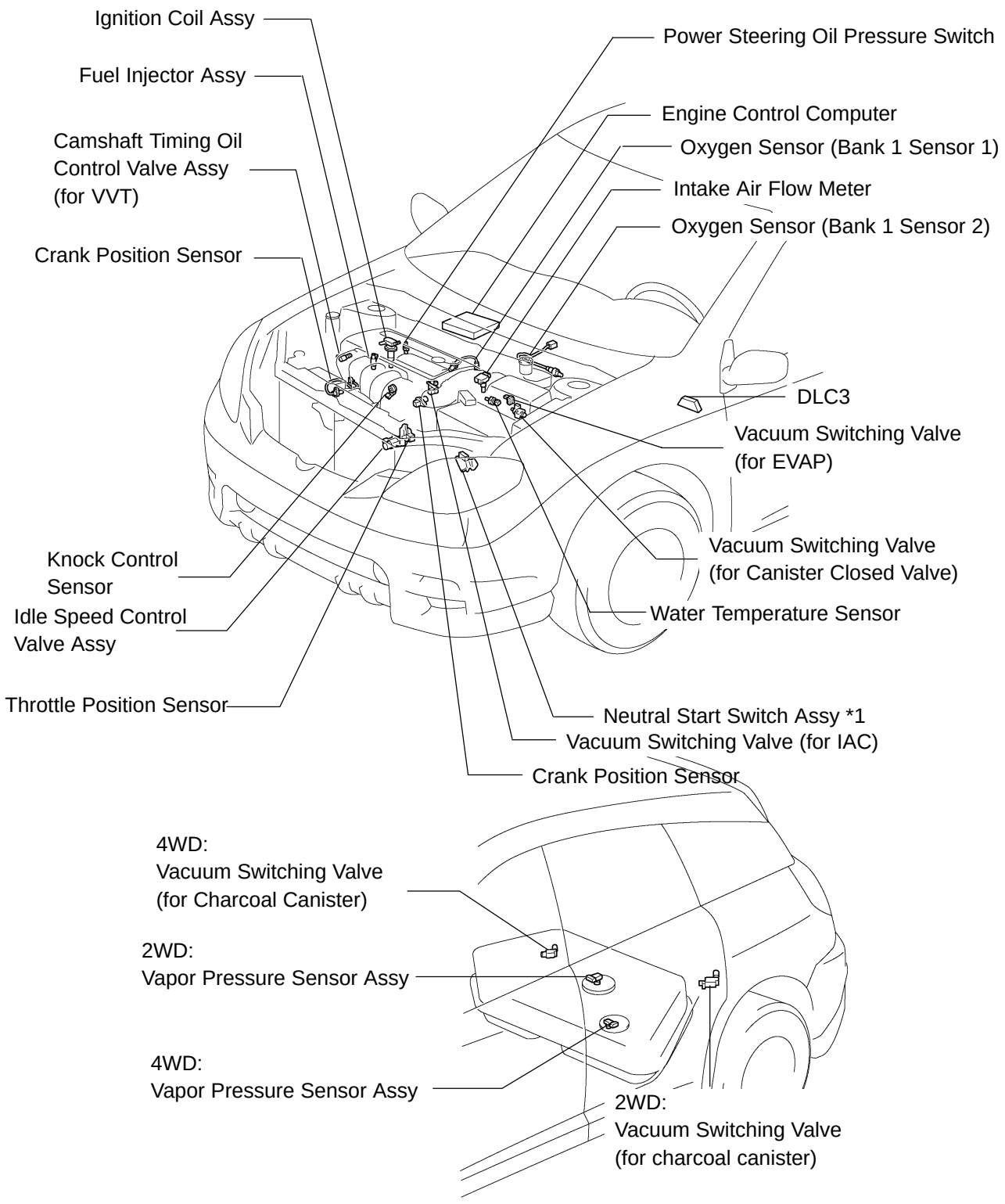

*1: Only for A/T

A66192

057HD–02

PRE–CHECK

1. DIAGNOSIS SYSTEM

(a) Description

- When troubleshooting OBD II vehicles, the only difference from the usual troubleshooting procedure is that you need to connect the vehicle to the OBD II scan tool complying with SAE J1978 or hand–held tester, and read off various data output from the vehicle's ECM.
- OBD II regulations require that the vehicle's on–board computer lights up the Malfunction Indicator Light (MIL) on the instrument panel when the computer detects a malfunction in the emission control system/components or in the powertrain control components which affect vehicle emissions, or a malfunction in the computer. In addition to the MIL lighting up when a malfunction is detected, the applicable Diagnostic Trouble Code (DTC) prescribed by SAE J2012 is recorded in the ECM memory (See page 05–16).

If the malfunction does not reoccur in 3 consecutive trips, the MIL goes off automatically but the DTCs remain in the ECM memory.

- To check the DTCs, connect the OBD II scan tool or hand–held tester to the Data Link Connector 3 (DLC3) on the vehicle. The OBD II scan tool or hand–held tester also enables you to erase the DTCs and check freeze frame data and various forms of engine data (For operating instructions, see the OBD II scan tool's instruction book.). DTCs include SAE controlled codes and manufacturer controlled codes. SAE controlled codes must be set as prescribed by the SAE, while manufacturer controlled codes can be set freely by the manufacturer within the prescribed limits (See DTC chart on page 05–16).
- The diagnosis system operates in the normal mode during the normal vehicle use. It also has a check mode for technicians to simulate malfunction symptoms and troubleshoot. Most DTCs use 2 trip detection logic* to prevent erroneous detection, which ensures the malfunction detection. By switching the ECM to the check mode when troubleshooting, the technician can cause the MIL to light up for a malfunction that is only detected once or momentarily (hand–held tester only) (See step 2).

- *2 trip detection logic:
  When a malfunction is first detected, the malfunction is temporarily stored in the ECM memory (1st trip).

If the same malfunction is detected again during the second drive test, this second detection causes the MIL to light up (2nd trip). (however, the ignition switch must be turned OFF between the 1st 2 trip and 2nd 2 trip.).

- Freeze frame data:
  Freeze frame data records the engine condition when a misfire (DTC P0300 – P0304) or fuel trim malfunction (DTC P0171 and P0172) or other malfunction (first malfunction only), is detected. Freeze frame data records the engine conditions (fuel system, calculated load, engine coolant temperature, fuel trim, engine speed, vehicle speed, etc.) when a malfunction is detected. When troubleshooting, it is useful for determining whether the vehicle was running or stopped, the engine was warmed up or not, the air–fuel ratio was lean or rich, etc. at the time of the malfunction.

- Priorities for troubleshooting:
  If troubleshooting priorities for multiple DTCs are given in the applicable DTC chart, these should be followed.
  If no instructions are given, troubleshoot the DTCs according to the following priorities.
  (1) DTCs other than fuel trim malfunction (DTCs P0171 and P0172) and misfire (DTCs P0300 – P0304).
  (2) Fuel trim malfunction (DTCs P0171 and P0172).
  (3) Misfire (DTCs P0300 – P0304).

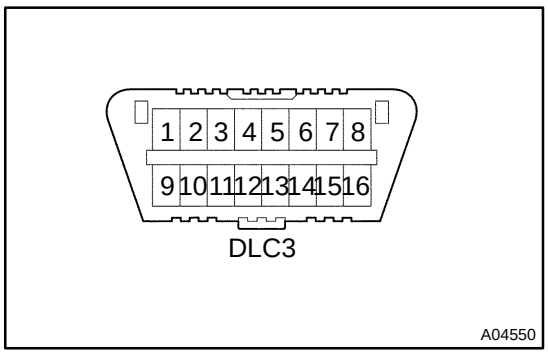

(b) Check the DLC3.
The vehicle's ECM uses ISO 9141–2 for communication. The terminal arrangement of DLC3 complies with SAE J1962 and matches the ISO 9141–2 format.

Terminal No	Connection/Voltage or Resistance	Condition
7	Bus + Line/Pulse generation	During transmission
4	Chassis Ground – Body Ground/1 Ω or less	Always
5	Signal Ground – Body Ground/1 Ω or less	Always
16	Battery Positive – Body Ground/9 – 14 V	Always

HINT:
If your display shows UNABLE TO CONNECT TO VEHICLE when you have connected the cable of the OBD II scan tool or hand–held tester to the DLC3, turned the ignition switch ON and operated the scan tool, there is a problem on the vehicle side or tool side.

- If the communication is normal when the tool is connected to another vehicle, inspect the DLC3 on the original vehicle.
- If the communication is still impossible when the tool is connected to another vehicle, the problem is probably in the tool itself, so consult the Service Department listed in the tool's instruction manual.

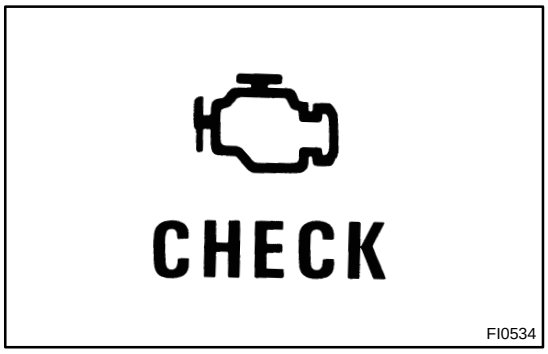

2. Normal Mode:
INSPECT DIAGNOSIS

(a) Check the MIL.
(1) The MIL comes on when the ignition switch is turned ON and the engine is not running.

HINT:
If the MIL does not light up, troubleshoot the combination meter (See page 05–16).

(2) When the engine starts, the MIL should go off. If the lamp remains on, it means the diagnosis system has detected a malfunction or abnormality in the system.

(b) Check the DTC.

NOTICE:

- **If there is no DTC in the normal mode, check the 1st trip DTC using Continuous Test Results function (Mode 7 for SAE J1979) on the OBD II scan tool or hand–held tester.**
- **Hand–held tester only:**
  When the diagnosis system is switched from the normal mode to the check mode, all the DTCs and freeze frame data recorded in the normal mode will be erased. So before switching modes, always check the DTCs and freeze frame data, and note them down.
  (1) Prepare the OBD II scan tool (complying with SAE J1978) or hand–held tester.
  (2) Connect the OBD II scan tool or hand–held tester to the DLC3.
  (3) Turn the ignition switch ON, and push the OBD II scan tool or hand–held tester switch ON.

(4) Use the OBD II scan tool or hand–held tester to check the DTCs and freeze frame data and note them down (For operating instructions, see the OBD II scan tool's instruction book).

If there is no DTC in the normal mode, check the 1st trip DTC using Continuous Test Results function (Mode 7 for SAE J1979) on the OBD II scan tool or hand–held tester.

(5) See page 05–16 to confirm the details of the DTCs.

NOTICE:

- **When simulating symptoms with an OBD II scan tool (excluding hand–held tester) to check the DTCs, use the normal mode. For code on the DTC chart subject to "2 trip detection logic", perform the following either action.**
- **Turn the ignition switch OFF after the symptom is simulated the once. Then repeat the simulation process again. When the problem has been simulated twice, the MIL lights up and the DTCs are recorded in the ECM.**
- **Check the 1st trip DTC using Mode 7 (Continuous Test Results) for SAE J1979.**

(c) Clear the DTC.

The DTC and freeze frame data will be erased by either action.

(1) Operating the OBD II scan tool (complying with SAE J1978) or hand–held tester to erase the codes (For operating instructions, see the OBD II scan tool's instruction book).

(2) Disconnecting the battery terminals or E.F.I.1 fuse.

NOTICE:

If the hand–held tester switches the ECM from the normal mode to the check mode or viseversa, or if the ignition switch is turned from ON to ACC or OFF during the check mode, the DTCs and freeze frame data will be erased.

3. Check Mode:

INSPECT DIAGNOSIS

HINT:

Hand–held tester only:

Compared to the normal mode, the check mode has an increased sensitivity to detect malfunctions. Furthermore, the same diagnostic items as ones detected in the normal mode can also be detected in the check mode.

(a) Check the DTC.

(1) Initial conditions

- Battery positive voltage 11V or more
- Throttle valve fully closed
- Transmission in neutral position
- A/C switched OFF

(2) Turn the ignition switch OFF.

(3) Prepare the hand–held tester.

(4) Connect the hand–held tester to the DLC3.
(5) Turn the ignition switch ON and push the hand–held tester switch ON.

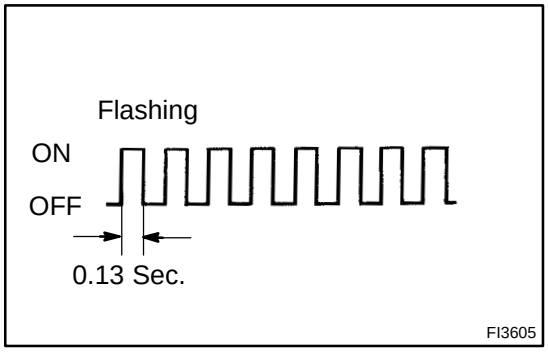

(6) Switch the hand–held tester from the normal mode to the check mode.
(7) Check if the MIL blinks.

NOTICE:

If the hand–held tester switches the ECM from the normal mode to the check mode or vise–versa, or if the ignition switch is turned from ON to ACC or LOCK during the check mode, the DTCs and freeze frame data will be erased.

(8) Start the engine (The MIL goes off after the engine starts).
(9) Simulate the conditions of the malfunction described by the customer.

NOTICE:

Leave the ignition switch ON until you have checked the DTC, etc.

(10) After simulating the malfunction conditions, use the hand–held tester diagnosis selector to check the DTCs and freeze frame data, etc.

HINT:

Take care not to turn the ignition switch OFF. Turning the ignition switch OFF switches the diagnosis system from the check mode to the normal mode. So all the DTCs, etc. will be erased.

(11) After checking the DTC, inspect the applicable circuit.

4. FAIL–SAFE CHART

If any of the following codes is recorded, the ECM enters fail–safe mode.

DTC No.	Fail–safe Operation	Fail–safe Deactivation Conditions
P0100	Ignition timing fixed at 10˚BTDC	Returned to normal condition
P0110	Intake air temperature is fixed at 20˚C (68˚F)	Returned to normal condition
P0115	Engine coolant temperature is fixed at 80˚(176˚F)	Returned to normal condition
P0120	VTA is fixed at 0˚	The following condition must be repeated at least 2 times consecutively when closed throttle position switch is OFF: VTA ≧ 0.1 V and ≦ 0.95 V
P0135 P0141	The heater circuit in witch an abnormality is detected is turned off	Ignition switch OFF
P0325	Max. timing retardation	Ignition switch OFF
P1300 P1305 P1310 P1315	Fuel cut	Returned to normal condition
P1656	It cut electrically the circuit in which an abnormality is detected.	Returned to normal condition

5. CHECK FOR INTERMITTENT PROBLEMS

Hand–held tester only:

By putting the vehicle's ECM in the check mode, 1 trip detection logic is possible instead of 2 trip detection logic and the sensitivity to detect open circuits is increased. This makes it easier to detect intermittent problems.

(1) Clear the DTC (See step 2).
(2) Set the check mode (See step 3).
(3) Perform a simulation test (See page 01–24).
(4) Check the connector and terminal (See page 01–34).
(5) Handle the connector (See page 01–34).

6. DATA LIST

HINT:

According to the DATA LIST displayed by the OBD II scan tool or Hand–held tester, you can read the value of the switch, sensor, actuator and so on without parts removal. Reading the DATA LIST as a first step of troubleshooting is one of the method to shorten the labor time.

(a) Warm up the engine.
(b) Turn the ignition switch OFF.
(c) Connect the OBD II scan tool or Hand–held tester to the DLC3.
(d) Turn the ignition switch ON.
(e) According to the display on tester, read the "DATA LIST".

Item	Measurement Item/Range (Display)	Normal Condition	Diagnostic Note
INJECTOR	Injection period of the No.1 cylinder/ Min.: 0 ms, Max.: 32.64 ms	Idling: 1.1 – 2.1 ms	
IGN ADVANCE	Ignition timing advance for No.1 cylinder/ Min.: –64 deg., Max.: 63.5 deg.	Idling: BTDC 8 – 12 deg.	
IAC DUTY RATIO	Duty ratio of the IAC valve/ Min.: 0 %, Max.: 99 %	• Idling: 25 – 45 % • Racing with out load(2500 rpm): 12.3 – 17.9 %	
CALC LOAD	Calculated load by engine ECM/ Min.: 0 %, Max.: 100 %	• Idling: 11.3 – 16.0 % • Racing without load(2500 rpm): 12.3 – 17.9 %	
MAF	Air flow rate from MAF sensor/ Min.: 0 gm/s, Max.: 655 gm/s	• Idling: M/T 1.4 – 2.0 gm/sec. A/T 1.4 – 2.0 gm/sec. • Racing without load (2,500 rpm): 5.4 – 7.9 gm/sec.	
ENGINE SPD	Engine Speed/ Min.: 0 rpm, Max.: 16383 rpm	Idling: M/T 650 – 750 rpm A/T 650 – 750 rpm	
COOLANT TEMP	Coolant temperature/ Min.: –40 °C, Max.: 140 °C	After warming up: 80 – 95°C (176 – 203°F)	If the value is "–40 °C" or "140 °C", sensor circuit is open or shorted.
INTAKE AIR	Intake air temperature/ Min.: –40 °C, Max.: 140 °C	Equivalent to Ambient Temp.	
THROTTLE POS	Absolute throttle position sensor/ Min.: 0 %, Max.: 100 %	• Throttle fully closed: 8 – 18 % • Throttle fully open: 64 – 98 %	
CTP SW	Closed throttle position switch/ ON or OFF	• Throttle fully closed: ON • Throttle open: OFF	
VEHICLE SPD	Vehicle speed/ Min.: 0 km/h, Max.: 255 km/h	Vehicle stopped: 0 km/h (0 mph)	

OS2 B1 S1	Oxygen sensor output voltage of the bank 1 sensor 1/ Min.: 0 V, Max.: 1.275 V	Idling: 0.1 – 0.9 V	
O2S B1 S2	Oxygen sensor output voltage of the bank 1 sensor 2/ Min.: 0 V, Max.: 1.275 V	Idling: 0.1 – 0.9 V	
VAPOR PRESS	Vapor pressure/ Min.: – 4.12 kPa, Max.: 2.125 kPa		
SHORT FT #1	Short term fuel trim of bank 1/ Min.: –100 %, Max.: 100%	0 ± 20 %	
LONG FT #1	Long term fuel trim of bank 1/ Min.: –100 %, Max.: 100 %	0 ± 20 %	
TOTAL FT #1	Total fuel trim of bank 1/ Min.: 0.5, Max.: 1.496	Idling: 0.5 – 1.4	
TOTAL FT #2	Total fuel trim of bank 2/ Min.: 0.5, Max.: 1.496	Idling: 0.5 – 1.4	
O2FT B1 S1	Short term fuel trim associated with the bank1, sensor1/ Min.: 100 %, Max.: 100 %		
O2FT B1 S2	Short term fuel trim associated with the bank1, sensor2/ Min.: –100 %, Max.: 100 %		
O2LR B1 S1	Response time of the O2 sensor, lean to rich (bank1, sensor1)/ Min.: 0 ms, Max.: 16711 ms		
O2LR B2 S1	Response time of the O2 sensor, lean to rich (bank2, sensor1)/ Min.: 0 ms, Max.: 16711 ms		
O2RL B1 S1	Response time of the O2 sensor, lean to rich/ (bank1, sensor1) Min.: 0 ms, Max.: 16711 ms		
O2RL B2 S1	Response time of the O2 sensor, lean to rich/ (bank2, sensor1) Min.: 0 ms, Max.: 16711 ms		
FUEL SYS #1, #2	Fuel system status (Bank1, 2) / OL or CL or OLDRIVE or OLFAULT or CLFAULT	Idling after warming up: CL	• OL: Open Loop–has not yet satisfied conditions to go closed loop. • CL: Closed Loop–using oxygen sensor(s) as feed back for fuel control. • OL DRIVE: Open loop due to driving conditions. (power enrichment, deceleration enleanment) • OL FAULT: Open loop due to detected system fault. • CL FAULT: Closed loop, but fault with at least one oxygen sensor may be using single oxygen sensor for fuel control.
FC IDL	Idle fuel cut / ON or OFF	Fuel cut operation: ON	
MIL	MIL status / ON or OFF	MIL ON: ON	

STARTER SIG	Starter signal / ON or OFF	Cranking: ON	
A/C SIG	A/C signal / ON or OFF	A/C ON: ON	
PNP SW [NSW]	Neutral position switch signal / ON or OFF	P or N position: ON	
ELECT LOAD SIG	Electrical load signal / ON or OFF	Defogger switch ON: ON	
STOP LIGHT SW *1	Stop light switch / ON or OFF	• Brake pedal depressed: ON • Brake pedal released: OFF	
PS OIL PRESS SW	Power steering signal / ON or OFF	Steering position is; center: OFF Except center:ON	
PS SIGNAL	Power steering signal/ ON or OFF	• After engine start: OFF • After steer the steering: ON	
FUEL PUMP / SPD	Fuel pump / speed status / ON/H or OFF/M,L	Idling: ON	
A/C MAG CLUTCH	A/C magnet clutch status / ON or OFF	A/C magnet clutch ON: ON	
EVAP VSV	VSV status for EVAP control / ON or OFF	VSV operating: ON	
VVT CTRL B1	VVT control status (Bank 1) / ON or OFF	VVT system operation: ON	
INT AIR CTL VSV *1	VSV status for intake air control/ ON or OFF		
IGNITION	Ignition counter/ Min.: 0, Max.: 400	0 – 400	
CYL #1, #2, #3, #4	Misfire ratio of the cylinder 1, 2, 3, 4/ Min.: 0 %, Max.: 50 %	0 %	
MIL ON RUN DIST	This parameter indicates the distance travelled while MIL/ Min.: 0 km, Max.: 65535 km	When there is no DTC: 0 km/h (0 mph)	

*1: Only for A/T models.

7. ACTIVE TEST

HINT:

Performing the ACTIVE TEST using the Hand–held tester allows the relay, VSV, actuator and so on to operate without parts removal. Performing the ACTIVE TEST as a first step of troubleshooting is one of the method to shorten the labor time.

It is possible to display the DATA LIST during the ACTIVE TEST.

(a) Warm up the engine.
(b) Turn the ignition switch OFF.
(c) Connect the OBD II scan tool or Hand–held tester to the DLC3.
(d) Turn the ignition switch ON.
(e) According to the display on tester, perform the ”ACTIVE TEST”.

Item	Test Details	Diagnostic Note
INJ VOL	[Test Details] Control the injection volume Min.: –12.5 %, Max.: 24.8 % [Vehicle Condition] Engine speed: 3000rpm or less.	
IAC DUTY RATIO	[Test Details] Control the IAC duty ratio Min.: 0 %, Max.: 90 % [Vehicle Condition] Vehicle speed: 0 km/h. Engine speed: Idling Battery voltage: 8.5V or more.	When Engine speed does not change, IAC system has some failure.
CAN CTRL VSV	[Test Details] Activate the VSV for canister control. ON or OFF	
TANK BYPASS VSV	[Test Details] Activate the VSV for tank bypass. ON or OFF	
EVAP VSV (ALONE)	[Test Details] Activate the VSV for EVAP control. ON or OFF	
A/C MAG CLUTCH	[Test Details] Control the A/C magnet clutch. ON or OFF	
FUEL PUMP / SPD	[Test Details] Control the fuel pump speed. ON or OFF	
VVT CTRL B1	[Test Details] Activate the VVT system (Bank 1). ON or OFF	• ON: Rough idle or engine stall. • OFF: Normal engine speed.
TC/TE1	[Test Details] Connect the TC and TE1 ON or OFF	
FC IDL PROHBT	[Test Details] Control the idle fuel cut prohibit. ON or OFF	

BASIC INSPECTION

When the malfunction code is not confirmed in the DTC check, troubleshooting should be carried out in the order for all possible circuits to be considered as the causes of the problems. In many cases, by carrying out the basic engine check shown in the following flow chart, the location causing the problem can be found quickly and efficiently. Therefore, using of this check is essential in engine troubleshooting.

1	CHECK BATTERY VOLTAGE

NOTICE:
Carry out this check under the engine stoppage condition.

	OK	NG
Voltage	11V or more	Less than 11V

NO → **CHARGE OR REPLACE BATTERY**

OK

2	CHECK IF ENGINE IS CRANKED

NG → **PROCEED TO PROBLEM TABLE ON PAGE 05–23**

OK

3	CHECK IF ENGINE STARTS

NG → **GO TO STEP 7**

OK

4	CHECK AIR FILER

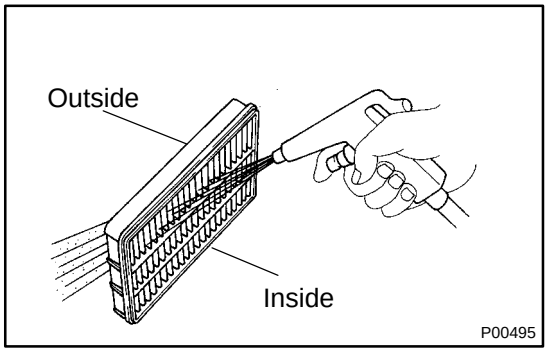

(a) Visually check that the air filter is not excessively dirty or oily.

HINT:
Visually check that the air filter is not excessively dirty or oily.

NOTICE:
If necessary, clean the filter with compressed air. First blow from inside thoroughly, then blow from outside of filter.

NG → **REPAIR OR REPLACE**

OK

5	CHECK IDLE SPEED (See page 14–1)

NG → PROCEED TO PROBLEM SYMPTOM TABLE ON PAGE 05–23

OK

6	CHECK IGNITION TIMIMG (See page 14–1)

NG → PROCEED TO PAGE 05–23 AND CONTINUE TO TROUBLESHOOT

OK

PROCEED TO PROBLEM SYMPTOM TABLE ON PAGE 05–23

7	CHECK FUEL PRESSURE (See page 11–5)

NG → PROCEED TO PAGE 05–23 AND CONTINUE TO TROUBLESHOOT

OK

8	CHECK FOR SPARK (See page 18–1)

NG → PROCEED TO PAGE 05–23 AND CONTINUE TO TROUBLESHOOT

OK

PROCEED TO PROBLEM SYMPTOMS TABLE ON PAGE 05–23

057HH–02

PROBLEM SYMPTOMS TABLE

When the malfunction code is not confirmed in the diagnostic trouble code check and the problem still can not be confirmed in the basic inspection, proceed to this problem symptoms tables and troubleshoot according to the numbered order given below.

Symptom	Suspect Area	See page
Engine does not crank (Does not start)	1. Starter and starter relay 2. Neutral start switch circuit *	19–1 40–9
No initial combustion (Does not start)	1. ECM power source circuit 2. Ignition coil (w/ Igniter) circuit 3. Fuel pump control circuit 4. Injector	05–148 05–115 05–144 05–68
No complete combustion (Does not start)	1. Fuel pump control circuit 2. Ignition coil (w/ Igniter) circuit 3. Injector	05–144 05–115 05–68
Engine cranks normally (Difficult to start)	1. Starter signal circuit 2. ISC valve circuit 3. Fuel pump control circuit 4. Ignition coil (w/ Igniter) 5. Spark plug 6. Compression 7. Injector	05–139 05–112 05–144 05–115 18–2 14–1 05–68
Cold engine (Difficult to start)	1. Starter signal circuit 2. ISC valve circuit 3. Fuel pump control circuit 4. Injector 5. Ignition coil (w/ Igniter) 6. Spark plug	05–139 05–112 05–144 05–68 05–115 18–2
Hot engine (Difficult to start)	1. Starter signal circuit 2. ISC valve circuit 3. Fuel pump control circuit 4. Injector 5. Ignition coil (w/ Igniter) 6. Spark plug	05–139 05–112 05–144 05–68 05–115 18–2
Incorrect first idle (Poor idling)	1. ISC valve circuit	05–112
High engine idle speed (Poor idling)	1. ISC valve circuit 2. ECM power source circuit 3. Neutral start switch circuit * 4. Back up power source circuit	05–112 05–148 40–9 05–132
Low engine idle speed (Poor idling)	1. ISC valve circuit 2. Neutral start switch circuit * 3. Fuel pump control circuit 4. Injector 5. Back up power source circuit	05–112 40–9 05–144 05–68 05–132
Rough idling (Poor idling)	1. ISC valve circuit 2. Injector 3. Ignition coil (w/ Igniter) circuit 4. Compression 5. Fuel pump control circuit 6. Back up power source circuit	05–112 05–68 05–115 14–1 05–144 05–132
Hunting (Poor idling)	1. ISC valve circuit 2. ECM power source circuit 3. Fuel pump control circuit	05–112 05–148 05–144
Hesitation/Poor acceleration (Poor drivability)	1. Injector 2. Fuel pump control circuit 3. Ignition coil (w/ Igniter) circuit 4. A/T faulty *	05–68 05–144 05–115 05–389

Muffler explosion, after fire (Poor drivability)	1. Ignition coil (w/ Igniter) 2. Spark plug 3. Injector	05–115 18–2 05–68
Surging (Poor drivability)	1. Fuel pump control circuit 2. Spark plug 3. Injector	05–144 18–2 05–68
Engine stall (Soon after starting)	1. Fuel pump control circuit 2. ISC valve circuit	05–144 05–112
Engine stall (After accelerator pedal released)	1. Injector 2. ISC valve circuit 3. ECM	05–68 05–112 01–34
Engine stall (When shifting N to D)	1. Neutral start switch circuit * 2. ISC valve circuit	40–9 05–112

*A/T only

057HG–02

TERMINALS OF ECM

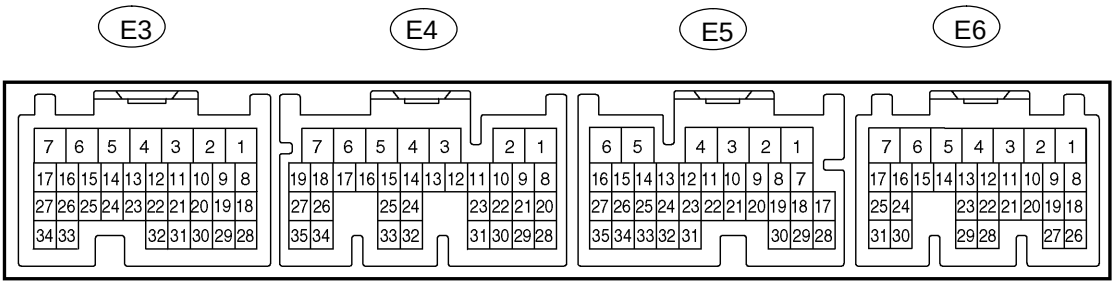

Y

A66714

Symbols (Terminals No.)	Wiring Color	Condition	STD Voltage (V)
BATT (E6 – 3) – E1 (E4 – 7)	R–W ⇔ BR	Always	8 – 14
FC (E6 – 10) – E1 (E4 – 7)	G–R ⇔ BR	IG switch ON	8 – 14
FC (E6 – 10) – E1 (E4 – 7)	G–R ⇔ BR	Idling	Below 1.5
PTNK (E6 – 21) – E2 (E3 – 28)	L ⇔ BR	IG switch ON, fuel cap taken off	2.9 – 3.7
W (E6 – 11) – E1 (E4 – 7)	R–Y ⇔ BR	Idling	8 – 14
W (E6 – 11) – E1 (E4 – 7)	R–Y ⇔ BR	IG switch ON	Below 3.5
+B (E6 – 1) – E1 (E4 – 7)	B ⇔ BR	IG switch ON	8 – 14
STP*1 (E5 – 19) – E1 (E4 – 7)	G–W ⇔ BR	IG switch ON, brake pedal depressed	8 – 14
STP*1 (E5 – 19) – E1 (E4 – 7)	G–W ⇔ BR	IG switch ON, brake pedal released	Below 1.5
F/PS (E6 – 14) – E1 (E4 – 7)	Y ⇔ BR	IG switch ON	Pulse generation
STA (E4 – 9) – E1 (E4 – 7)	B ⇔ BR	Cranking	5.5 or more
HT1B (E5 – 4) – E03 (E4 – 5)	P–B ⇔ W–B	Idling	Below 3.0
HT1B (E5 – 4) – E03 (E4 – 5)	P–B ⇔ W–B	IG switch ON	9 – 14
PSW (E4 – 29) – E1 (E4 – 7)	L–R ⇔ BR	IG switch ON	8 – 14
SPD (E5 – 17) – E1 (E4 – 7)	V–W ⇔ BR	IG switch ON, rotate driving wheel slowly	Pulse generation
OX1B (E4 – 21) – E1 (E4 – 7)	W ⇔ BR	Maintain engine speed at 2,500 rpm for 2 min. after warning up	Pulse generation (See page 05–44)
TACH (E6 – 5) – E1 (E4 – 7)	B ⇔ BR	Idling	Pulse generation
VC (E3 – 18) – E2 (E3 – 28)	Y ⇔ BR	IG switch ON	4.5 – 5.5
HT1A (E4 – 4) – E03 (E4 – 5)	P ⇔ W–B	Idling	Below 3.0
HT1A (E4 – 4) – E03 (E4 – 5)	P ⇔ W–B	IG switch ON	9 – 14
EVP (E3 – 12) – E01 (E3 – 7)	L–B ⇔ W–B	IG switch ON	8 – 14
VG (E4 – 24) – EVG (E4 – 32)	G ⇔ L–W	Idling, A/C switch OFF	1.1 – 1.5
OX1A (E4 – 23) – E1 (E4 – 7)	B ⇔ BR	Maintain engine speed at 2,500 rpm for 2 min. after warning up	Pulse generation (See page 05–44)
NSW*1 (E4 –8) – E1 (E4 – 7)	R ⇔ BR	IG switch ON Other shift position in P or N position	8 – 14
NSW*1 (E4 –8) – E1 (E4 – 7)	R ⇔ BR	IG switch ON Shift position in P or N position	Below 1.5
THW (E3 – 19) – E2 (E3 – 28)	W ⇔ BR	Idling, Engine coolant temp. at 80˚C (176˚F)	0.2 – 1.0
G22+ (E3 – 26) – NE– (E3 – 34)	B ⇔ W	Idling	Pulse generation (See page 05–76)
NE+ (E3 – 27) – NE– (E3 – 34)	B ⇔ W	Idling	Pulse generation (See page 05–76)
THA (E3 – 20) – E2 (E3 – 28)	Y–B ⇔ BR	Idling, intake air temp. 20 ˚C (68 ˚F)	0.5 – 3.4

VTA (E3 – 21) – E2 (E3 – 28)	LG ⇔ BR	IG switch ON, throttle valve fully closed	0.3 – 1.0
VTA (E3 – 21) – E2 (E3 – 28)	LG ⇔ BR	IG switch ON, throttle valve fully open	3.2 – 4.9
#10 (E3 – 1) – E01 (E3 – 7)	Y ⇔ W–B	IG switch ON	8 – 14
#20 (E3 – 2) – E01 (E3 – 7)	B ⇔ W–B	IG switch ON	8 – 14
#30 (E3 – 3) – E01 (E3 – 7)	W ⇔ W–B	IG switch ON	8 – 14
#40 (E3 – 4) – E01 (E3 – 7)	L ⇔ W–B	IG switch ON	8 – 14
IGT1 (E3 – 8) – E1 (E4 – 7)	R–L ⇔ BR	Idling	Pulse generation (See page 05–115)
IGT2 (E3 – 9) – E1 (E4 – 7)	Y–G ⇔ BR	Idling	Pulse generation (See page 05–115)
IGT3 (E3 – 10) – E1 (E4 – 7)	GR ⇔ BR	Idling	Pulse generation (See page 05–115)
IGT4 (E3 – 11) – E1 (E4 – 7)	W ⇔ BR	Idling	Pulse generation (See page 05–115)
IGF (E3 – 23) – E1 (E4 – 7)	L–Y ⇔ BR	IG switch ON	4.5 – 5.5
IGF (E3 – 23) – E1 (E4 – 7)	L–Y ⇔ BR	Idling	Pulse generation (See page 05–115)
RSO (E3 – 5) – E01 (E3 – 7)	B–L ⇔ W–B	IG switch ON	9 – 14
OCV+ (E3 – 15) – OCV– (E3 – 14)	Y ⇔ B–Y	IG switch ON	Pulse generation (See page 05–123)
CCV (E5 – 1) – E01 (E3 – 7)	L ⇔ W–B	IG switch ON	9 – 14
KNK1 (E4 – 1) – EKNK (E4 – 2)	B ⇔ W	Idling	Pulse generation (See page 05–73)
ELS (E6 – 12) – E1 (E4 – 7)	G ⇔ BR	Light switch ON	9 – 14
ELS (E6 – 12) – E1 (E4 – 7)	G ⇔ BR	Light switch OFF	Below 3.0
ELS2 (E6 – 13) – E1 (E4 – 7)	W ⇔ BR	Defoger switch ON	9 – 14
ELS2 (E6 – 13) – E1 (E4 – 7)	W ⇔ BR	Defoger switch OFF	Below 3.0
TBP (E6 – 4) – E01 (E3 – 7)	R ⇔ W–B	IG switch ON	9 – 14

*1 A/T models.

ECM POWER SOURCE CIRCUIT

CIRCUIT DESCRIPTION

When the ignition switch is turned ON, battery positive voltage is applied to the coil which closes the contacts of the E.F.I. relay (Marking: E.F.I.) and supplies power to the terminal +B of the ECM.

WIRING DIAGRAM

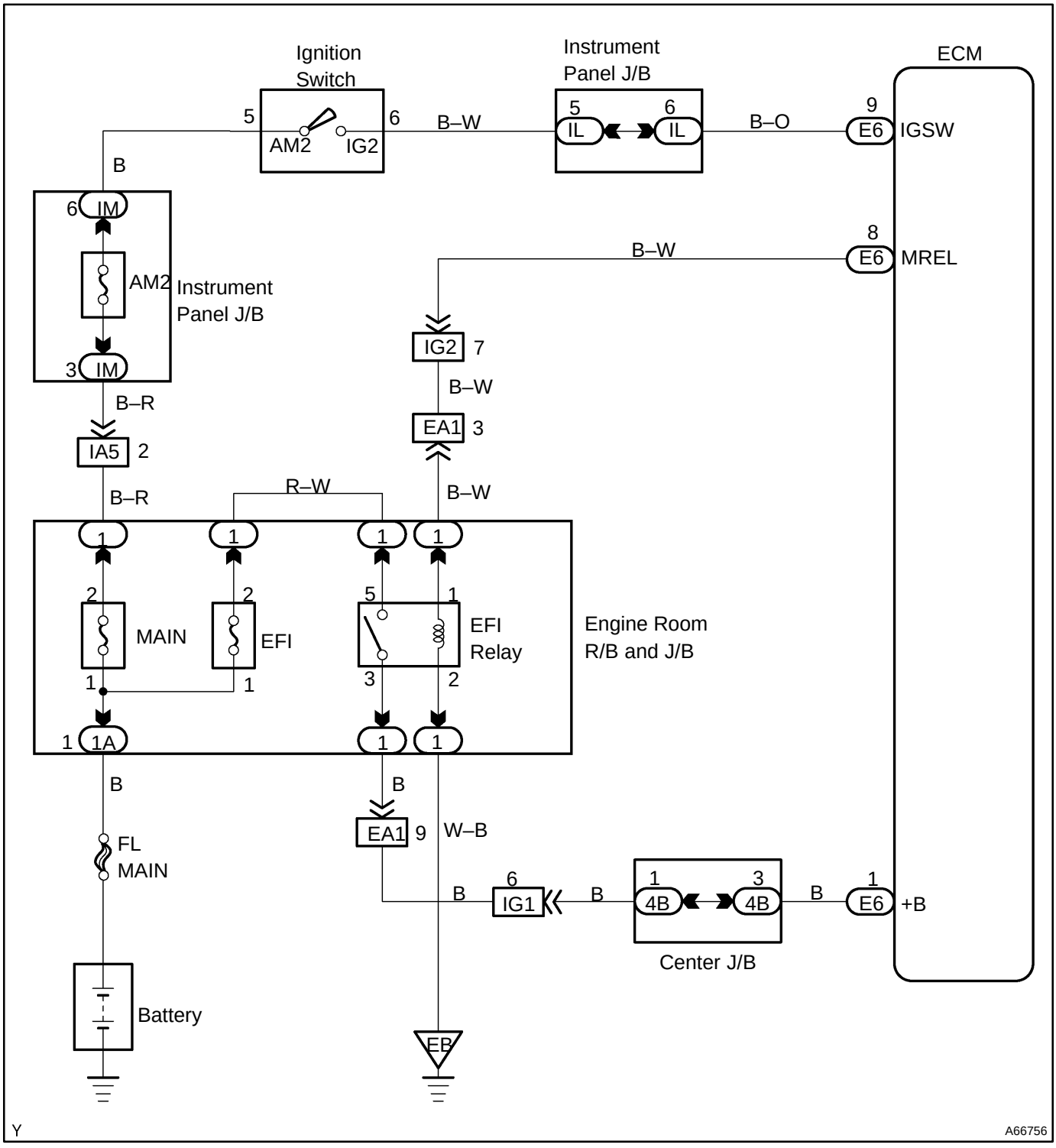

INSPECTION PROCEDURE

1 INSPECT ECM

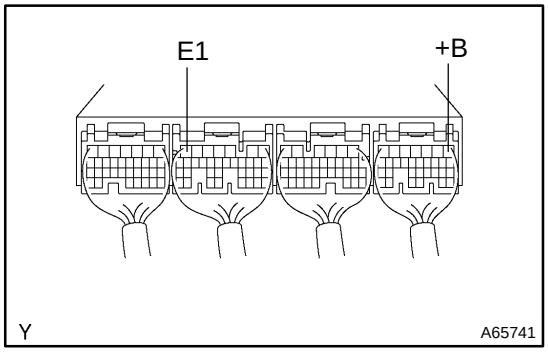

(a) Turn the ignition switch ON.
(b) Measure voltage between the terminals +B of the ECM connector and E1 of the ECM connector.
Voltage: 9 – 14 V

OK → **CHECK AND REPLACE ECM**

NG

2 CHECK HARNESS AND CONNECTOR(ECM GROUND)

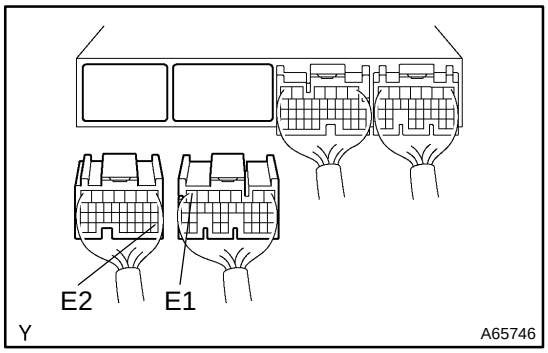

(a) Disconnect the battery negative (–) terminal.
(b) Disconnect the ECM E3 and E4 connector.
(c) Check continuity between the terminal E1 of the ECM connector and body ground.
Resistance: 1 Ω or less
(d) Check continuity between the terminal E2 of the ECM connector and body ground.
Resistance: 1 Ω or less

NG → **REPAIR OR REPLACE HARNESS AND CONNECTOR**

OK

3 CHECK RELAY(E.F.I. RELAY)

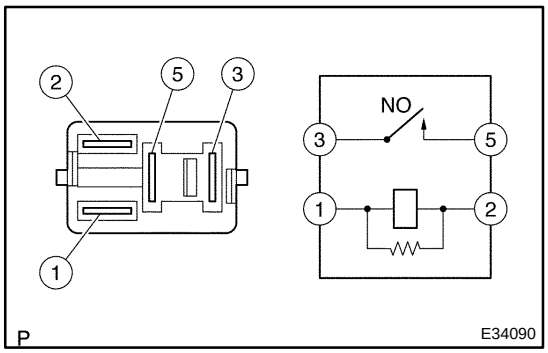

(a) Remove the E.F.I. relay.
(b) Check continuity between the terminals shown below.
Resistance:

TERMINAL NO.	RESISTANCE
1 – 2	1 Ω or less
3 – 5	1 MΩ or more

(c) Check continuity between the terminals 3 and 5 of the connector when the battery voltage is applied to the terminals between 1 and 2.
Resistance:

TERMINAL NO.	RESISTANCE
3 – 5	1 Ω or less

NG → **REPLACE RELAY**

OK

4	CHECK FUSE(E.F.I. FUSE)

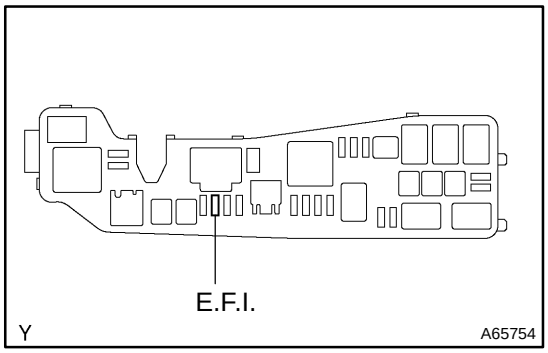

(a) Remove the E.F.I. fuse.
(b) Check continuity of E.F.I. fuse.
Resistance: 1 Ω or less

NG → **REPLACE FUSE**

OK

5	CHECK RELAY OPERATION(E.F.I. RELAY)

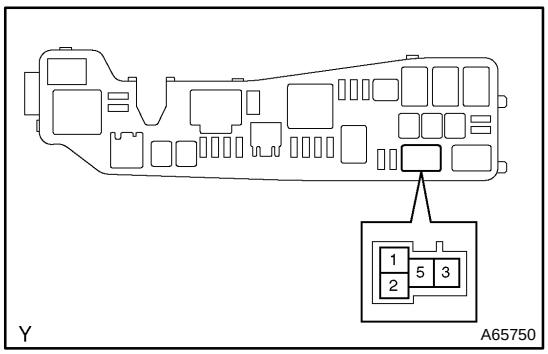

(a) Remove the E.F.I. relay.
(b) Confirm that the E.F.I. relay operates normally when turning the ignition switch ON.
Result:
E.F.I. relay operation sound is heard successively when turning the ignition switch ON.

NG → **Go to step 9**

OK

6 CHECK HARNESS AND CONNECTOR(ECM–E.F.I.RELAY)

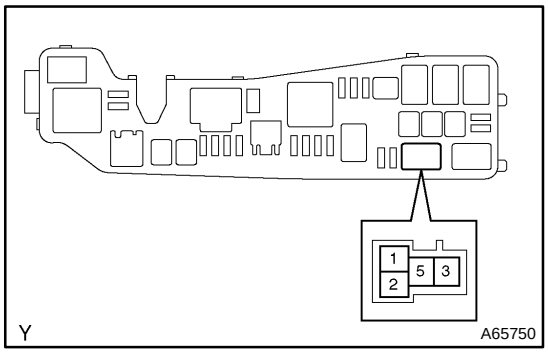

(a) Disconnect the battery negative (–) terminal.
(b) Remove the E.F.I. relay.
(c) Check continuity between the terminals 1 of the E.F.I. relay in the engine room R/B and +B of the ECM connector.
Resistance: 1 Ω or less
(d) Check short between the terminals 1 of the E.F.I. relay in the engine room R/B and E2 of the ECM.
Resistance: 1 MΩ or more

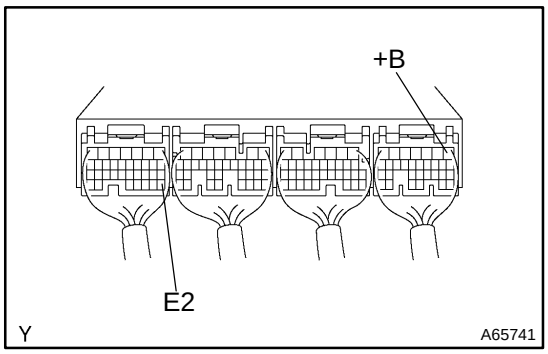

NG → **REPAIR OR REPLACE HARNESS AND CONNECTOR**

OK

7 CHECK HARNESS AND CONNECTOR(E.F.I. FUSE–BATTERY)

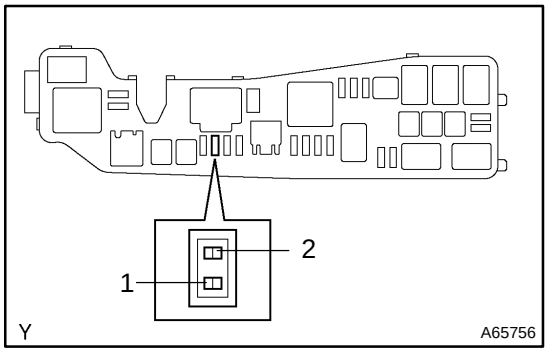

(a) Disconnect the battery negative (–) connector.
(b) Remove the E.F.I. fuse.
(c) Check continuity between the terminals 1 of the E.F.I. fuse holder in the engine room R/B and negative (–) of the battery.

NOTICE:
Do not insert the tester leads hard in the procedure (c), or the holder may be damaged.

NG → **REPAIR OR REPLACE HARNESS AND CONNECTOR**

OK

REPLACE ECM

8 INSPECT IGNITION OR STARTER SWITCH ASSY

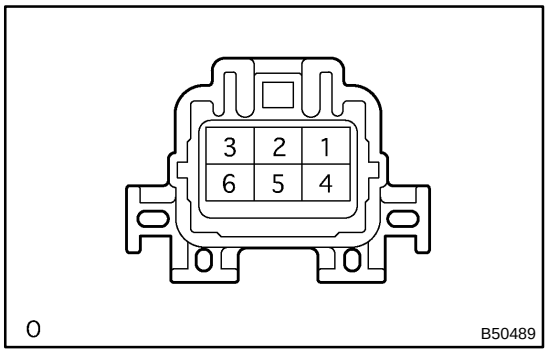

(a) Check continuity between the connector terminals shown in the chart below.

Switch	Terminal No.	Resisitance
LOCK	All Terminals	1MΩ or more
ACC	1–3	1Ω or less
ON	1–2–3 5–6	1Ω or less
START	4–5–6 1–2	1Ω or less

NG → **REPLACE IGNITION OR STARTER SWITCH ASSY**

OK

9 CHECK HARNESS AND CONNECTOR(IGNITION SWITCH–E.F.I. CIRCUIT OPENING RELAY)

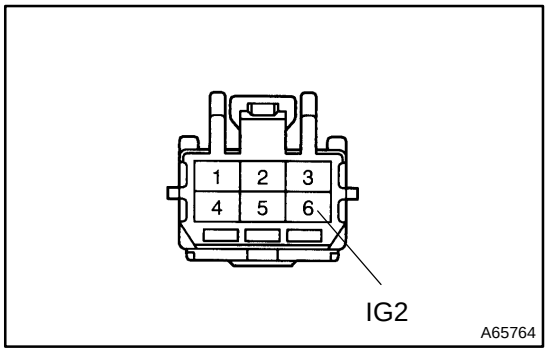

(a) Disconnect the battery negative (–) terminal.
(b) Remove the E.F.I. circuit opening relay.
(c) Disconnect the ignition switch connector.
(d) Check continuity between the terminals IG2 of the ignition switch connector and 5 of the E.F.I. circuit opening relay in the R/B.
Resistance: 1 Ω or less
(e) Check for short between the terminal IG2 of the ignition switch and body ground.
Resistance: 1 MΩ or more

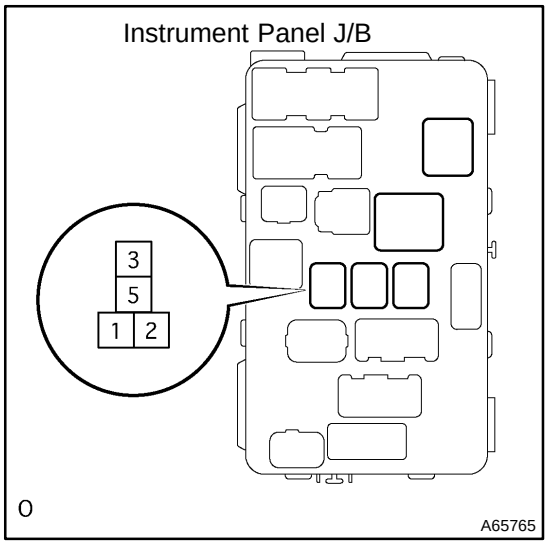

NG → **REPAIR OR REPLACE HARNESS AND CONNECTOR**

OK

REPLACE ECM

FUEL PUMP CONTROL CIRCUIT

CIRCUIT DESCRIPTION

In the diagram below, when the engine is cranked, current flows from terminal ST of the ignition switch to the starter relay coil and also current flows to terminal STA of ECM (STA signal).
When the STA signal and NE signal are input to the ECM, Tr is turned ON, current flows to the coil of the circuit opening relay, the relay switches on, power is supplied to the fuel pump and the fuel pump operates. While the NE signal is generated (engine running), the ECM keeps Tr ON (circuit opening relay ON) and the fuel pump also keeps operating.

WIRING DIAGRAM

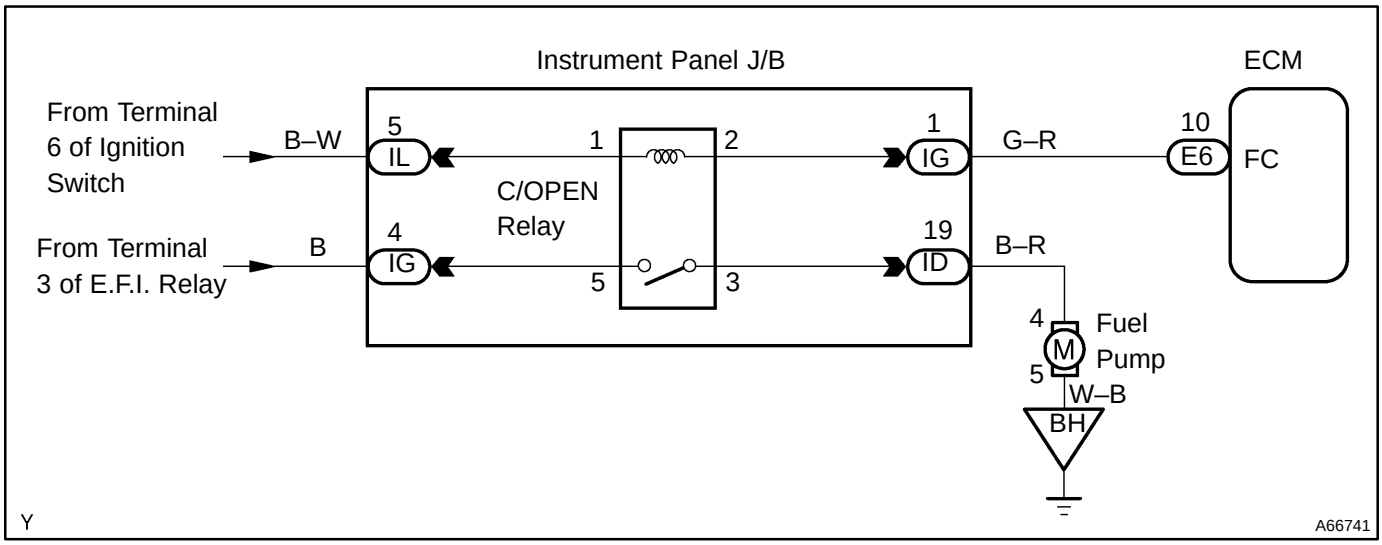

INSPECTION PROCEDURE

Hand–held tester:

1	**PERFORM ACTIVE TEST BY HAND–HELD TESTER(OPERATION OF CIRCUIT OPENING RELAY)**

(a) Connect the hand–held tester to the DLC3.
(b) Turn the ignition switch ON and push the hand–held tester main SW ON.
(c) Select the item ”FUEL PUMP / SPD” in the ACTIVE TEST.
(d) Turn the ignition switch ON, and perform the active test at the engine stop.
Result: The circuit opening relay operates.

OK → **PROCEED TO NEXT CIRCUIT INSPECTION SHOWN ON PROBLEM SYMPTOMS TABLE**

NG

2	CHECK FOR ECM POWER SOURCE CIRCUIT (See page 05–308)

NG → REPAIR OR REPLACE

OK

3	INSPECT E.F.I. CIRCUIT OPENING RELAY ASSY (See page 10–12)

NG → REPLACE E.F.I. CIRCUIT OPENING RELAY ASSY

OK

4	INSPECT ECM(CHECK VOLTAGE)

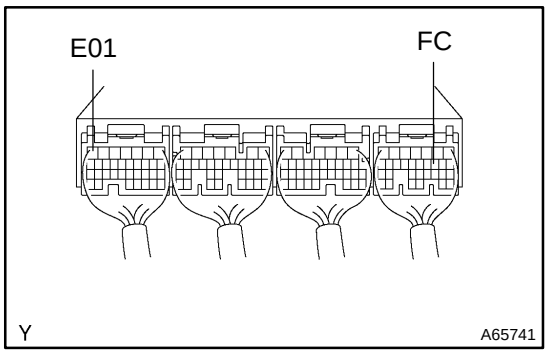

(a) Turn the ignition switch ON.
(b) Measure the voltage between terminal FC and E01 of the ECM connector.
Voltage: 9 – 14 V

OK → Go to step 6

NG

5	CHECK WIRE HARNESS OR CONNECTOR(E.F.I. RELAY–E.F.I. CIRCUIT OPENING RELAY, E.F.I. CIRCUIT OPENING RELAY) (See page 01–34)

NG → REPAIR OR REPLACE WIRE HARNESS OR CONNECTOR

OK

CHECK AND REPLACE ECM

6	INSPECT FUEL PUMP (See page 11–7)

NG → REPLACE FUEL PUMP

OK

7	CHECK WIRE HARNESS OR CONNECTOR(CHECK FOR OPEN)

(a) Check for open in harness and connector between E.F.I. circuit opening relay and fuel pump, and fuel pump and body ground.
Result: Continuity

NG → **REPAIR OR REPLACE WIRE HARNESS OR CONNECTOR**

OK

CHECK AND REPLACE ECM

OBD II scan tool (excluding hand–held tester):

1	CHECK OPERATION OF FUEL PUMP

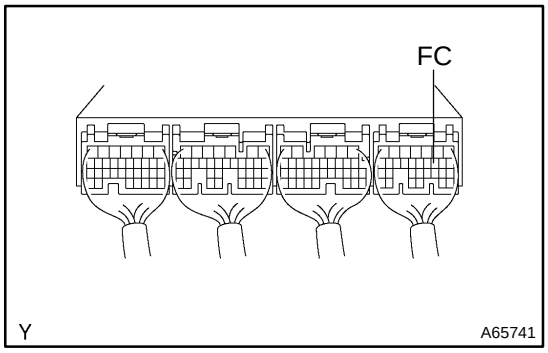

(a) Turn the ignition switch ON.
(b) Connect between terminal FC of the ECM E6 connector and the body ground.
(c) Check for fuel pressure in the fuel inlet hose when it is pinched off.
Result: There is pressure in fuel inlet hose.

HINT:
At this time, you will hear the fuel return flowing noise.

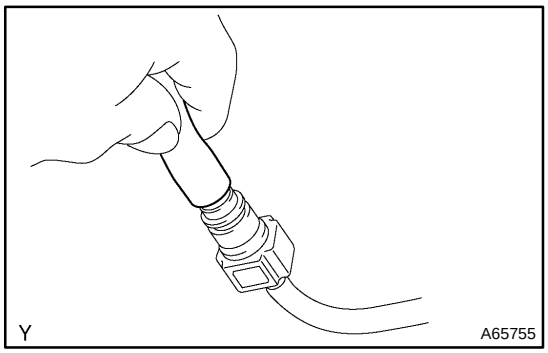

OK → **PROCEED TO NEXT CIRCUIT INSPECTION SHOWN ON PROBLEM SYMPTOMS TABLE**

NG

2	CHECK FOR ECM POWER SOURCE CIRCUIT (See page 05–308)

NG → **REPAIR OR REPLACE**

OK

3	INSPECT E.F.I. CIRCUIT OPENING RELAY ASSY (See page 10–12)

NG → REPLACE E.F.I. CIRCUIT OPENING RELAY ASSY

OK

4	INSPECT ECM(CHECK VOLTAGE)

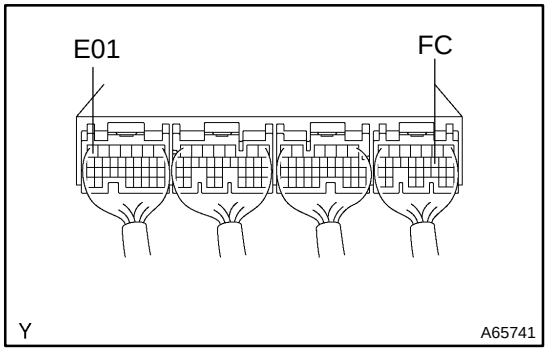

(a) Turn the ignition switch ON.
(b) Measure the voltage between terminal FC of the ECM connector and E01 of the ECM connector.
Voltage: 9 – 14 V

OK → Go to step 6

NG

5	CHECK WIRE HARNESS OR CONNECTOR(E.F.I. RELAY–E.F.I. CIRCUIT OPENING RELAY, E.F.I. CIRCUIT OPENING RELAY)

OK → REPAIR OR REPLACE WIRE HARNESS OR CONNECTOR

NG

CHECK AND REPLACE ECM

6	INSPECT FUEL PUMP (See page 11–7)

NG → REPLACE FUEL PUMP

OK

7	CHECK WIRE HARNESS OR CONNECTOR(OPEN BETWEEN TERMINAL 3 OF E.F.I. CIRCUIT OENING RELAY AND TERMINAL)

NG → REPAIR OR REPLACE WIRE HARNESS OR CONNECTOR

OK

CHECK AND REPLACE ECM

DTC	P1300	IGNITER CIRCUIT MALFUNCTION (NO.1)

DTC	P1305	IGNITER CIRCUIT MALFUNCTION (NO.2)

DTC	P1310	IGNITER CIRCUIT MALFUNCTION (NO.3)

DTC	P1315	IGNITER CIRCUIT MALFUNCTION (NO.4)

CIRCUIT DESCRIPTION

A Direct Ignition System (DIS) has been adopted. The DIS improves the ignition timing accuracy, reduces the high–voltage loss, and enhances overall reliability of the ignition system by eliminating the distributor. The DIS is a 1–cylinder ignition system which ignites one cylinder with one ignition coil. In the 1–cylinder ignition system, the spark plug is connected to the end of the secondary winding. High voltage generated in the secondary winding is applied directly to the spark plug. The spark of the spark plug passes through from the center electrode to the ground electrode.

The ECM determines ignition timing and outputs the ignition signals (IGT) of each cylinder. Based on IGT signals, the power transistors cut off the current to the primary coil in the ignition coil. At the same time, the igniter also sends an ignition confirmation signal (IGF) as a fail–safe measurement to the ECM.

DTC No.	DTC Detecting Condition	Trouble Area
P1300 P1305 P1310 P1315	No IGF signal to ECM while engine is running	• Ignition system • Open or short in IGF and IGT circuit from ignition coil with igniter • ignition coil with igniter • ECM

WIRING DIAGRAM

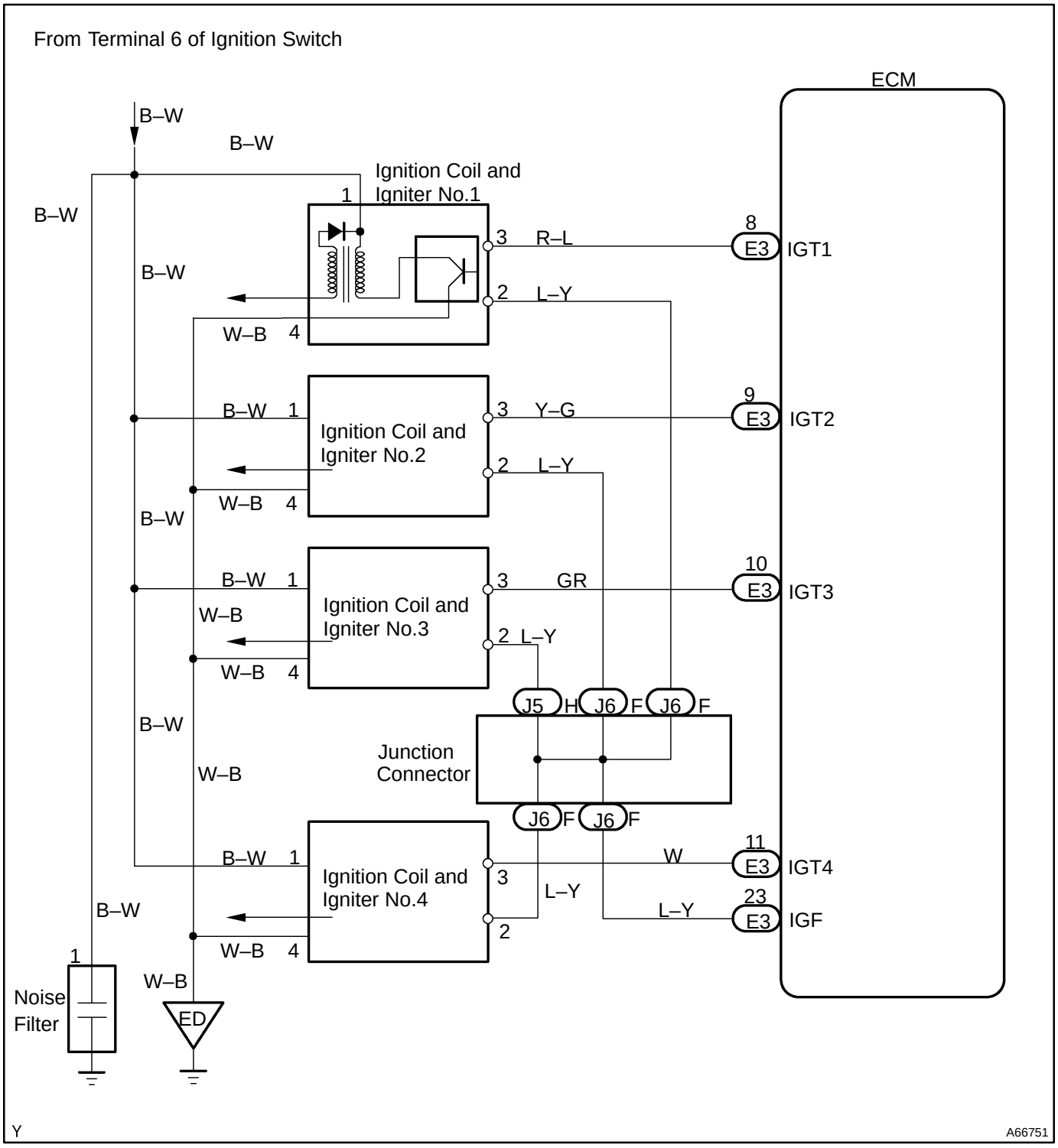

INSPECTION PROCEDURE

HINT:

- If DTC P1300 is displayed, check No.1 ignition coil with igniter circuit.
- If DTC P1305 is displayed, check No.2 ignition coil with igniter circuit.
- If DTC P1310 is displayed, check No.3 ignition coil with igniter circuit.
- If DTC P1315 is displayed, check No.4 ignition coil with igniter circuit.
- Read freeze frame data using hand–held tester or OBD II scan tool. Because freeze frame records the engine conditions when the malfunction is detected, when troubleshooting it is useful for determining whether the vehicle was running or stopped, the engine warmed up or not, the air–fuel ratio lean or rich, etc. at the time of the malfunction

1	CHECK SPARK PLUG AND SPARK (See page 18–4)

NG → Go to step 4

OK

2	CHECK HARNESS AND CONNECTOR(ECM–IGNITION COIL)

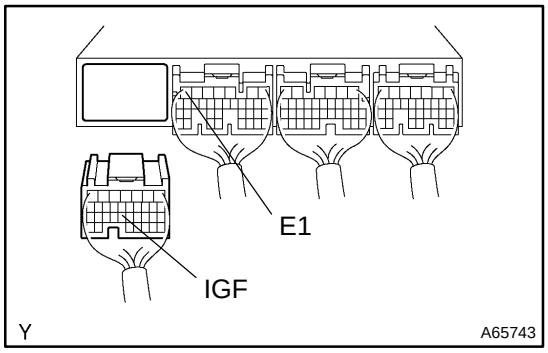

HINT:

The procedure below is for NO.1 cylinder. If a malfunction is found on the other cylinders, check the circuit for the cylinder with referring to this procedure.

(a) Disconnect the ignition coil connector.

(b) Disconnect the ECM E3 connector.

(c) Check for open between the terminals IGF of the ECM connector and IGF of the ignition coil connector.
Resistance: 1 Ω or less

(d) Check for short between the terminals IGF of the ECM connector and E1 of the ECM connector.
Resistance: 1 MΩ or less.

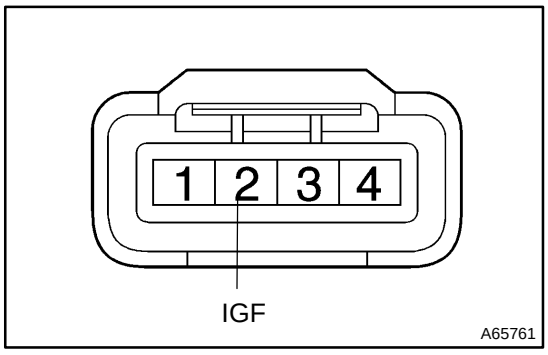

NG → REPAIR OR REPLACE HARNESS AND CONNECTOR

OK

3 INSPECT ECM(CHECK VOLTAGE)

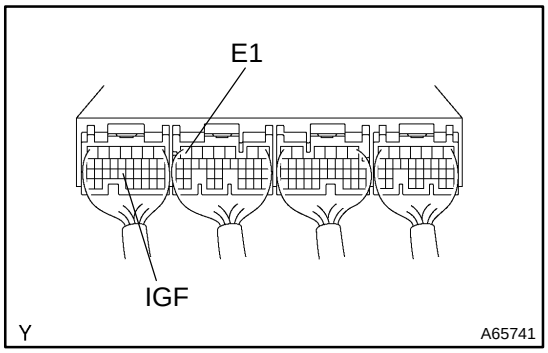

(a) Disconnect the ignition coil connector.
(b) Turn the ignition switch ON.
(c) Measure voltage between the terminals IGF of the ECM connector and E1 ECM connector.
Voltage: 4.5 – 5.5 V

OK → **REPLACE IGNITION COIL ASSY**

NG

CHECK AND REPLACE ECM

4 CHECK HARNESS AND CONNECTOR(ECM–IGNITION COIL)

HINT:
The procedure below is for NO.1 cylinder. If a malfunction is found on the other cylinders, check the circuit for the cylinder with referring to this procedure.

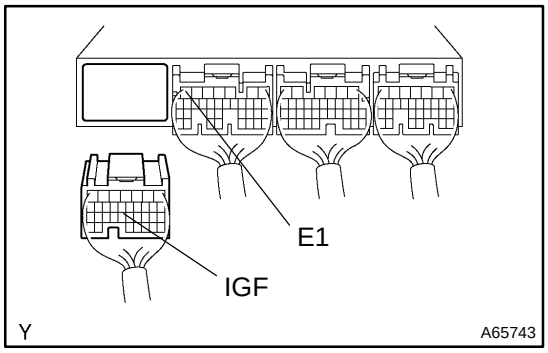

(a) Disconnect the ignition coil connector.
(b) Disconnect the ECM E3 connector.
(c) Check for open between the terminals IGT1 of the ECM connector and IGT of the ignition coil connector.
Resistance: 1 Ω or less
(d) Check for short between the terminals IGT1 of the ECM connector and E1 of the ECM connector.
Resistance: 1 MΩ or more.

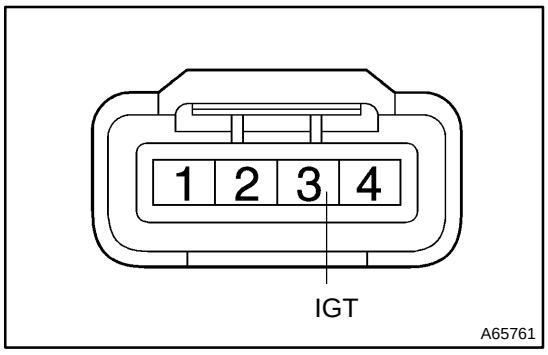

NG → **REPAIR OR REPLACE HARNESS AND CONNECTOR**

OK

5 INSPECT ECM(CHECK VOLTAGE)

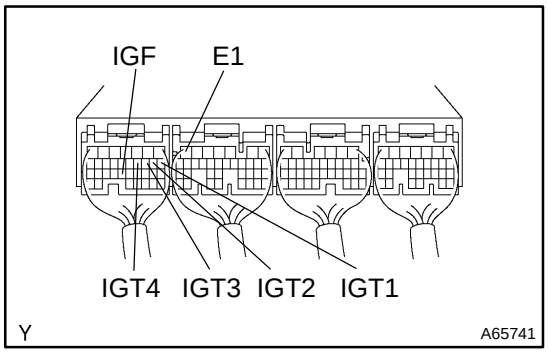

(a) Turn the ignition switch ON.
(b) Measure the voltage between terminals IGT1 – IGT4 of the ECM connector and E1 of the ECM connector when the engine is cranked.
Voltage: More than 0.1 V and less than 4.5 V

HINT:
During cranking or idling, check the waveform between terminals IGT1 – IGT4 and E1 of the ECM connector.

Item	Contents
Terminal	CH1: IGT1, IGT2, IGT3, IGT4 – E1 CH2: IGF – E1
Equipment Set	2V/DIV, 20ms/DIV
Condition	While the engine is cranking or idling

HINT:
Correct waveform appears as shown, with rectangle waves.

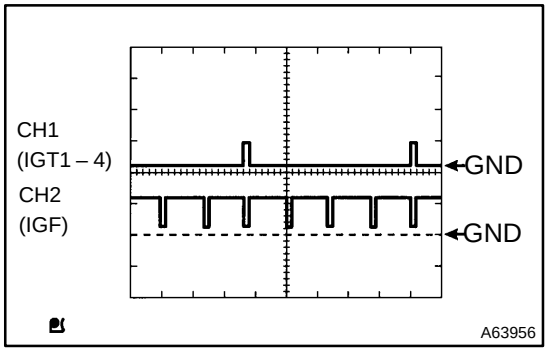

NG → **CHECK AND REPLACE ECM**

OK

6 INSPECT ECM(CHECK VOLTAGE)

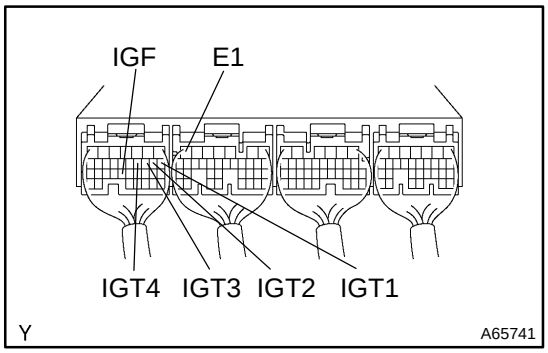

(a) Disconnect the ignition coil with the igniter connector.
(b) Turn the ignition switch ON.
(c) Measure the voltage between terminals IGT1 – IGT4 of the ECM connector and E1 of the ECM connector when the engine is cranked.
Voltage: More than 0.1 V and less than 4.5 V

NG → **CHECK AND REPLACE ECM**

OK

7	CHECK IGNITION COIL ASSY(POWER SOURCE)

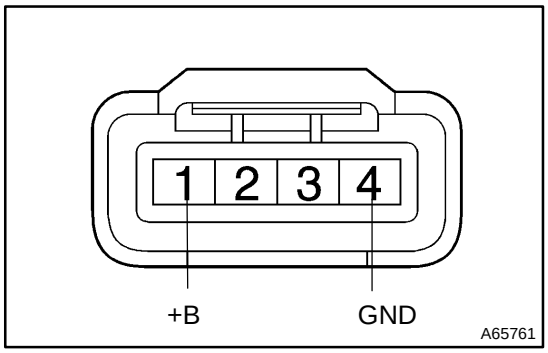

(a) Disconnect the ignition coil with the igniter connector.
(b) Turn the ignition switch ON.
(c) Measure voltage between terminals +B and GND of the ignition coil with the igniter connector.
Voltage: 9 – 14 V

OK → **REPAIR OR REPLACE POWER SOURCE**

NG

8	CHECK HARNESS AND CONNECTOR(IGNITION SWITCH–IGNITION COIL)

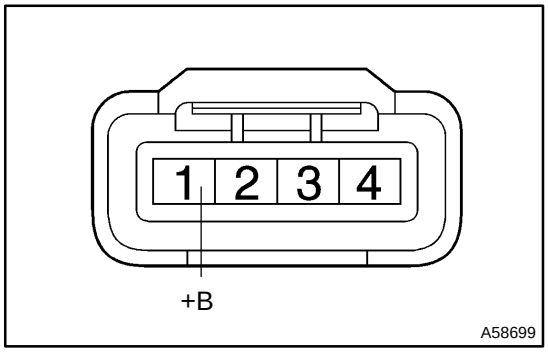

(a) Disconnect the ignition coil with igniter connector.
(b) Disconnect the ignition switch connector.
(c) Check for open between the terminals +B of the ignition coil with igniter connector and IG2 of the ignition switch.
Resistance: 1 Ω or less

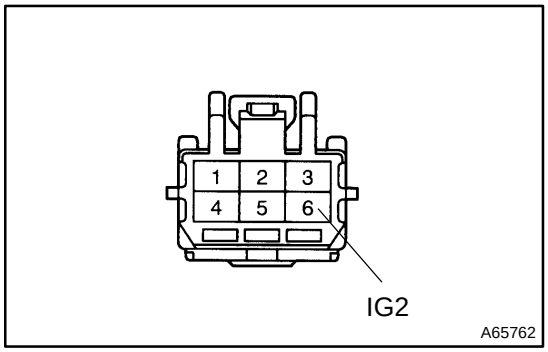

NG → **REPAIR OR REPLACE HARNESS AND CONNECTOR**

OK

REPLACE IGNITION COIL ASSY

DTC	P1335	CRANKSHAFT POSITION SENSOR CIRCUIT MALFUNCTION (DURING ENGINE RUNNING)

CIRCUIT DESCRIPTION

Refer to DTC P0335 on page 05–228.

DTC No.	DTC Detecting Condition	Trouble Area
P1335	If conditions (a) through (c) are met: (a) NE ≧ 1,000 rpm (b) NE signal is not detected for over 50 msec. (c) Not during cranking	• Open or short in crankshaft position sensor circuit • Crankshaft position sensor • Crank angle sensor plate • ECM

WIRING DIAGRAM

Refer to DTC P0335 on page 05–228.

INSPECTION PROCEDURE

Refer to DTC P0335 on page 05–228.

DTC	P1346	VVT SENSOR/CAMSHAFT POSITION SENSOR CIRCUIT RANGE/PERFORMANCE PLOBLEM (BANK 1)

CIRCUIT DESCRIPTION

Refer to DTC P0335 on page 05–228.

DTC No.	Detection Item	Trouble Area
P1346	Deviation in crankshaft position sensor signal and VVT sensor signal (2 trip detection logic)	• Mechanical system malfunction (Skipping teeth of timing chain, chain stretched) • ECM

WIRING DIAGRAM

Refer to DTC P0335 on page 05–228.

INSPECTION PROCEDURE

HINT:

Read freeze frame data using the hand–held tester or OBD II scan tool, as freeze frame data records the engine conditions when the malfunction is detected. When troubleshooting, it is useful for determining whether the vehicle was running or stopped, the engine was warmed up or not, the air–fuel ratio was lean or rich, etc. at the time of the malfunction.

1	CHECK VALVE TIMING (See page 14–262)

NG → ADJUST VALVE TIMING

OK ↓

CHECK AND REPLACE ECM

DTC P1349 VVT SYSTEM MALFUNCTION (BANK 1)

CIRCUIT DESCRIPTION

VVT system controls the intake valve timing to proper timing in response to driving condition.
ECM controls OCV (Oil Control Valve) to make the intake valve timing properly, and, oil pressure controlled with OCV is supplied to the VVT controller, and then, VVT controller changes relative position between the camshaft and the crankshaft.

DTC No.	DTC Detecting Condition	Trouble Area
1349	Condition (a) or (b) continues for after the engine is warmed up and engine speed at 400 – 4,000 rpm: (a) Valve timing does not change from of current valve timing (b) Current valve timing is fixed	• Valve timing • Oil control valve • VVT controller assembly • ECM

WIRING DIAGRAM

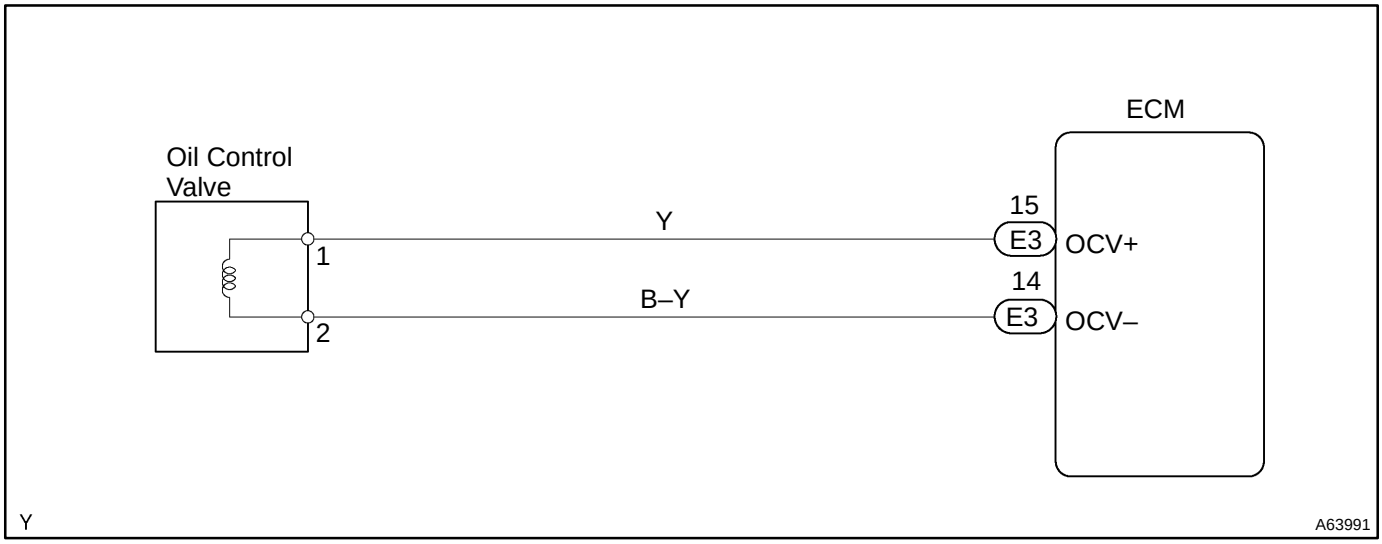

INSPECTION PROCEDURE

HINT:

- If DTC P1349 is displayed, check VVT system circuit.
- Read freeze frame data using the hand–held tester or OBD II scan tool, as freeze frame data records the engine conditions when the malfunction is detected. When troubleshooting, it is useful for determining whether the vehicle was running or stopped, the engine was warmed up or not, the air–fuel ratio was lean or rich, etc. at the time of the malfunction.

Hand–held tester:

1	CHECK VALVE TIMING (See page 14–262)

NG → ADJUST VALVE TIMING

OK

2 PERFORM ACTIVE TEST BY HAND–HELD TESTER(OPERATION OF OCV)

(a) Start the engine and warm it up.
(b) Connect the hand–held tester and select VVT on the ACTIVE TEST menu.
(c) Check the engine speed when operating the OCV by the hand–held tester.
OCV is OFF: Normal engine speed
OCV is ON: Rough idle or engine stall

HINT:
*: DTC P1349 is also output when a foreign object is detected in some parts of the system in the engine oil, and then the system returns to normal in a short time. As ECM is controlled to eject a foreign object, there is no problem on the VVT. There is also no problem on the VVT as the oil filter should catch the foreign object in the engine oil.

OK → **VVT SYSTEM OK**

NG

3 INSPECT ECM(CHECK VOLTAGE)

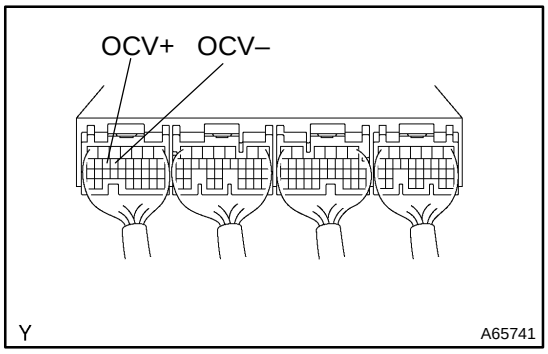

(a) Turn the ignition switch ON.
(b) Check the waveform between terminals OCV+ and OCV– of the ECM connector.

HINT:
- The correct waveform is as shown in the left.
- The waveform frequency (A) becomes longer as the engine speed becomes higher.

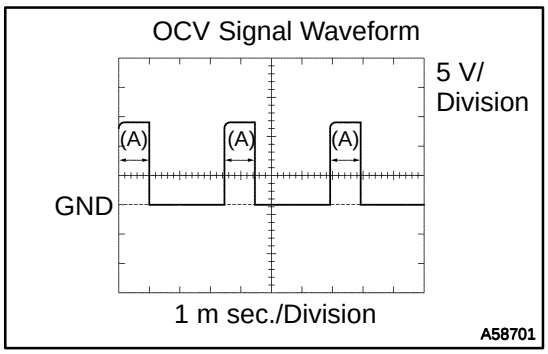

NG → **CHECK AND REPLACE ECM**

OK

4 INSPECT CAMSHAFT TIMING GEAR ASSY (See page 14–262)

NG → **REPLACE VVT CONTROLLER ASSEMBLY, AND THEN GO TO NEXT STEP**

OK

5	INSPECT CAMSHAFT TIMING OIL CONTROL VALVE ASSY (See page 10–12)

NG → REPLACE CAMSHAFT TIMING OIL CONTROL VALVE ASSEMBLY, AND THEN GO TO NEXT STEP

OK

6	CHECK BLOCKAGE(OCV AND OIL HOLE)

NG → REPAIR OR REPLACE

OK

7	PERFORM SIMULATION TEST(CHECK DTC)

(a) Clear the DTC (See page 05–157).
(b) Perform the simulation test.
(c) Check whether or not DTC P1349 is stored (See page 05–157).

Result:

	A	B
RESULT	P1349 is output.	P1349 is not output.

HINT:
DTC P1349 is also output when a foreign object is detected in some parts of the system in the engine oil, and then the system returns to normal in a short time. As ECM is controlled to eject a foreign object, there is no problem on the VVT. There is also no problem on the VVT as the oil filter should catch the foreign object in the engine oil.

B → VVT SYSTEM OK

A

CHECK AND REPLACE ECM

OBD II scan tool (excluding hand–held tester):

1	CHECK VALVE TIMING (See page 14–262)

NG → ADJUST VALVE TIMING

OK

2 CHECK OPERATION OF OCV

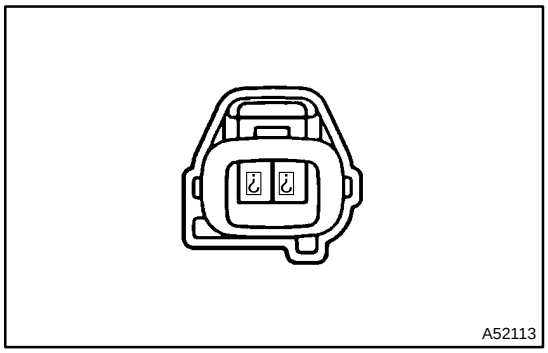

(a) Start the engine.
(b) Check the engine speed when disconnecting the OCV connector.
(c) Check the engine speed when applying battery positive voltage to the terminals of the OCV.

Result:

Result	Check (b)	Check (c)
A	Normal engine speed	Rough idle or engine stall
B	Except 1	

B → **Go to step 4**

A

3 INSPECT ECM(CHECK VOLTAGE)

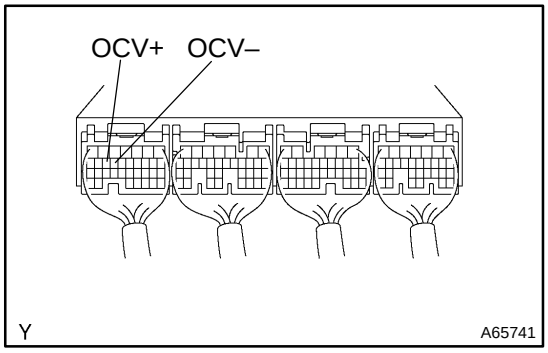

(a) Turn the ignition switch ON.
(b) Check the waveform between terminals OCV+ and OCV– of the ECM connector.

HINT:

- The correct waveform is as shown in the left.
- The waveform frequency (A) becomes longer as the engine speed becomes higher.
- DTC P1349 is also output when a foreign object is detected in some parts of the system in the engine oil, and then the system returns to normal in a short time. As ECM is controlled to eject a foreign object, there is no problem on the VVT. There is also no problem on the VVT as the oil filter should catch the foreign object in the engine oil.

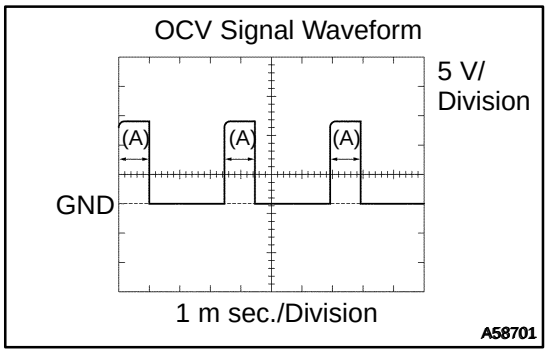

OK → **VVT SYSTEM OK**

NG

CHECK AND REPLACE ECM

4 INSPECT CAMSHAFT TIMING GEAR ASSY (See page 14–262)

NG → **REPLACE VVT CONTROLLER ASSEMBLY, AND THEN GO TO NEXT STEP**

OK

5	INSPECT CAMSHAFT TIMING OIL CONTROL VALVE ASSY (See page 10–12)

NG → REPLACE CAMSHAFT TIMING OIL CONTROL VALVE ASSEMBLY, AND THEN GO TO NEXT STEP

OK

6	CHECK BLOCKAGE(OCV AND OIL HOLE)

NG → REPAIR OR REPLACE

OK

7	PERFORM SIMULATION TEST(DTC CHECK)

(a) Clear the DTC (See page 05–157).
(b) Perform the simulation test.
(c) Check whether or not DTC P1349 is stored (See page 05–157).

Result:

	A	B
RESULT	P1349 is output.	P1349 is not output.

HINT:
DTC P1349 is also output when a foreign object is detected in some parts of the system in the engine oil, and then the system returns to normal in a short time. As ECM is controlled to eject a foreign object, there is no problem on the VVT. There is also no problem on the VVT as the oil filter should catch the foreign object in the engine oil.

B → VVT SYSTEM OK

A

CHECK AND REPLACE ECM

DTC	P1520	STOP LIGHT SWITCH CIRCUIT MALFUNCTION

This signal is used to detect that the brakes have been applied. The STP signal voltage is the same as the one supplied to the stop lights.The STP signal is used mainly to control the fuel cut–off engine speed (The fuel cut–off engine speed is reduced slightly when the vehicle is braking.).

DTC No.	DTC Detecting Condition	Trouble Area
P1520	Stop light switch does not turn off when repeating driving at 30 km or more and 10 time or more after depressing brake (2 trip detection logic)	• Short in stop light switch signal circuit • Stop light switch • ECM

WIRING DIAGRAM

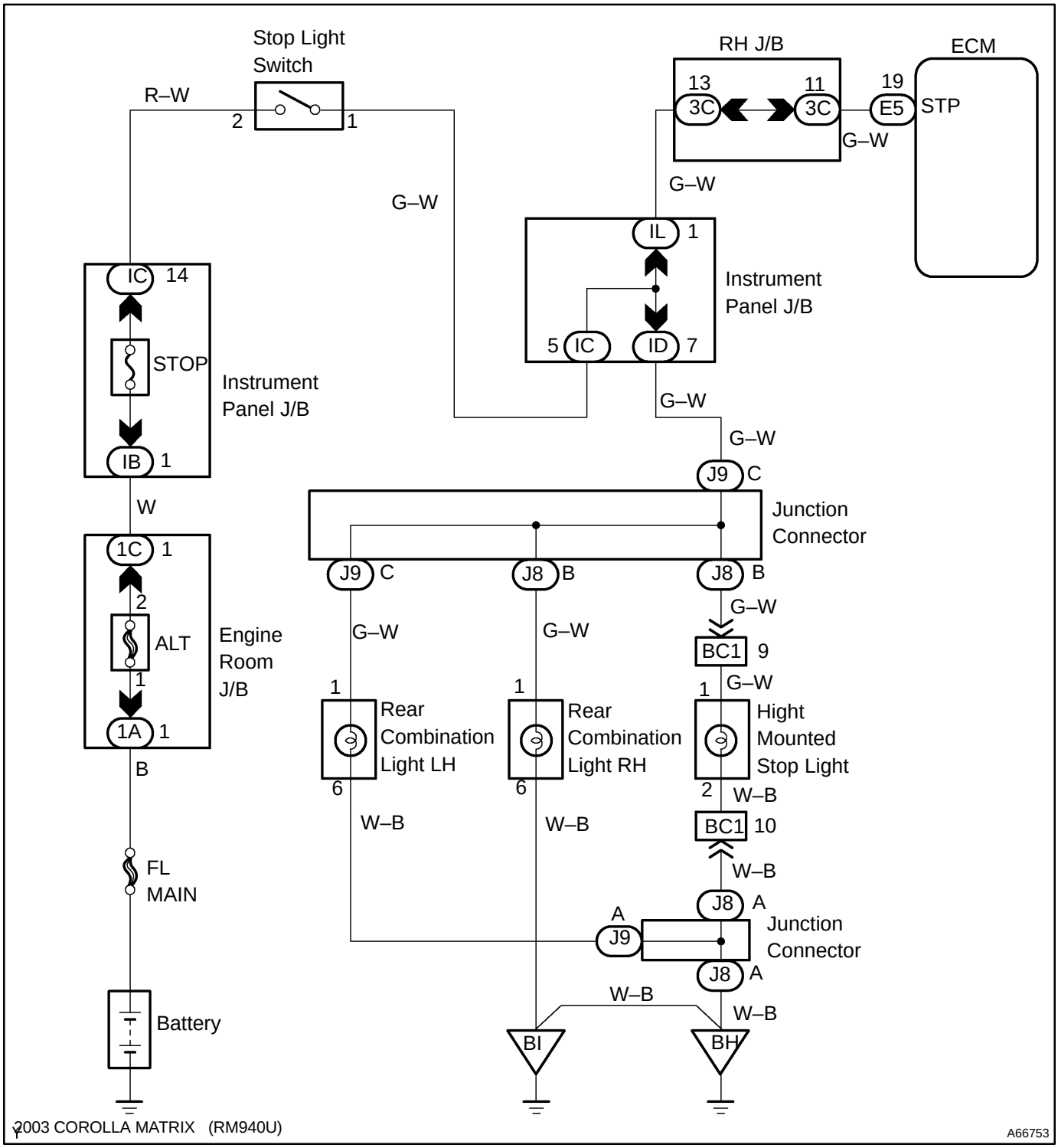

INSPECTION PROCEDURE

HINT:

Read freeze frame data using the hand–held tester or OBD II scan tool, as freeze frame data records the engine conditions when the malfunction is detected. When troubleshooting, it is useful for determining whether the vehicle was running or stopped, the engine was warmed up or not, the air–fuel ratio was lean or rich, etc. at the time of the malfunction.

Hand–held tester:

1	CHECK OPERATION OF STOP LIGHT

(a) Check if the stop lights go on and off normally when the brake pedal is operated and released.

NG → **REPAIR OR REPLACE STOP LIGHT SWITCH CIRCUIT**

OK

2	READ VALUE OF HAND–HELD TESTER

(a) Connect the hand–held tester to the DLC3.
(b) Turn the ignition switch ON and push the hand–held tester main switch ON.
(c) Read the STP signal on the hand–held tester.

Result:

Brake Pedal	STP Signal
Depressed	ON
Released	OFF

OK → **CHECK FOR INTERMITTENT PROBLEMS**

NG

3	CHECK WIRE HARNESS OR CONNECTOR(ECM–STOP LIGHT SWITCH)

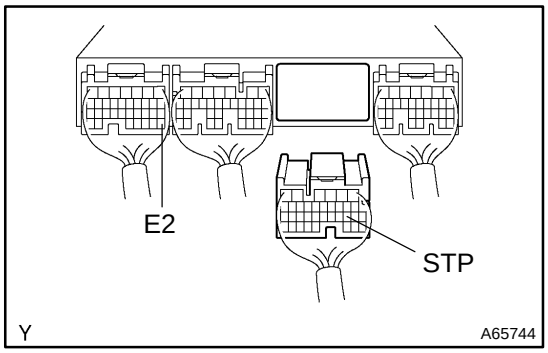

(a) Disconnect the ECM E5 connector.
(b) Disconnect the stop light connector.
(c) Check for open between the terminals STP of the ECM connector and 1 of the stop light connector.
Resistance: 1 Ω or less
(d) Check for short between the terminals STP of the ECM connector and E2 of the ECM connector.
Resistance: 1 MΩ or more

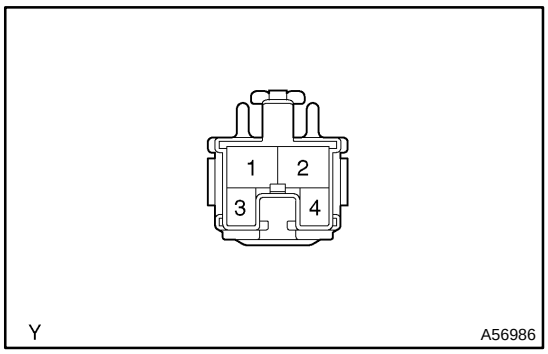

NG → **REPAIR OR REPLACE WIRE HARNESS OR CONNECTOR**

OK

CHECK AND REPLACE ECM

OBD II scan tool (excluding hand–held tester):

1	CHECK OPERATION OF STOP LIGHT

(a) Check if the stop lights go on and off normally when the brake pedal is operated and released.

NG → **REPAIR OR REPLACE STOP LIGHT SWITCH CIRCUIT**

OK

2	CHECK STP SIGNAL

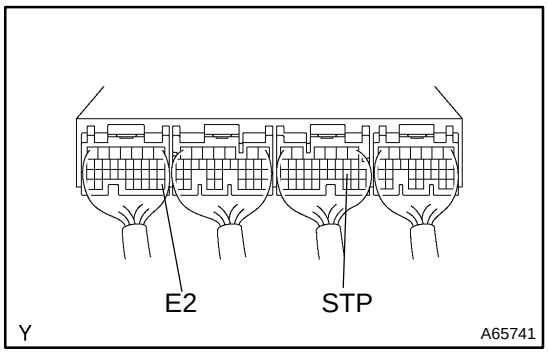

(a) Turn the ignition switch ON.
(b) Check the voltage between terminal STP and E2 of the ECM connector.
Voltage:

Brake Pedal	Voltage
Depressed	7.5 – 14 V
Released	Below 1.5 V

OK → **CHECK FOR INTERMITTENT PROBLEMS**

NG

3	CHECK HARNESS AND CONNECTOR(ECM–STOP LIGHT SWITCH)

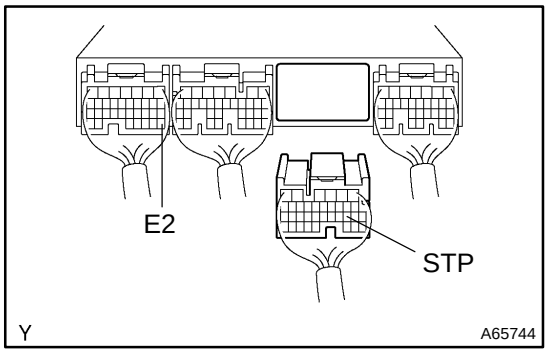

(a) Disconnect the ECM E5 connector.
(b) Disconnect the stop light connector.
(c) Check for open between the terminals STP of the ECM connector and 1 of the stop light connector.
Resistance: 1 Ω or less
(d) Check for short between the terminals STP of the ECM E5 connector and E2 of the ECM E3 connector.
Resistance: 1 MΩ or more

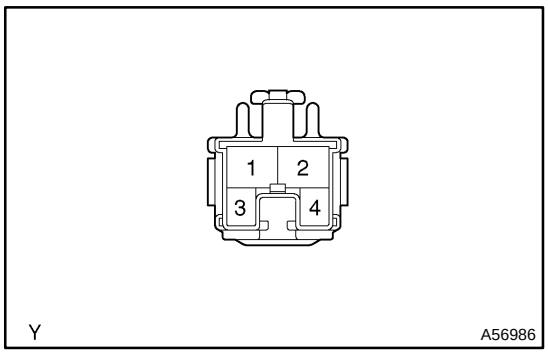

NG → **REPAIR OR REPLACE HARNESS AND CONNECTOR**

OK

CHECK AND REPLACE ECM

DTC	P1600	BACK–UP POWER SOURCE CIRCUIT MALFUNCTION

CIRCUIT DESCRIPTION

Battery positive voltage is applied to terminal BATT of the ECM even when the ignition switch is OFF for use by the DTC memory and air–fuel ratio adaptive control value memory, etc.

DTC No.	DTC Detecting Condition	Trouble Area
P1600	Open in back up power source circuit	• Open in back up power source circuit • ECM

HINT:
If DTC P1600 is displayed, the ECM does not store another DTC.

WIRING DIAGRAM

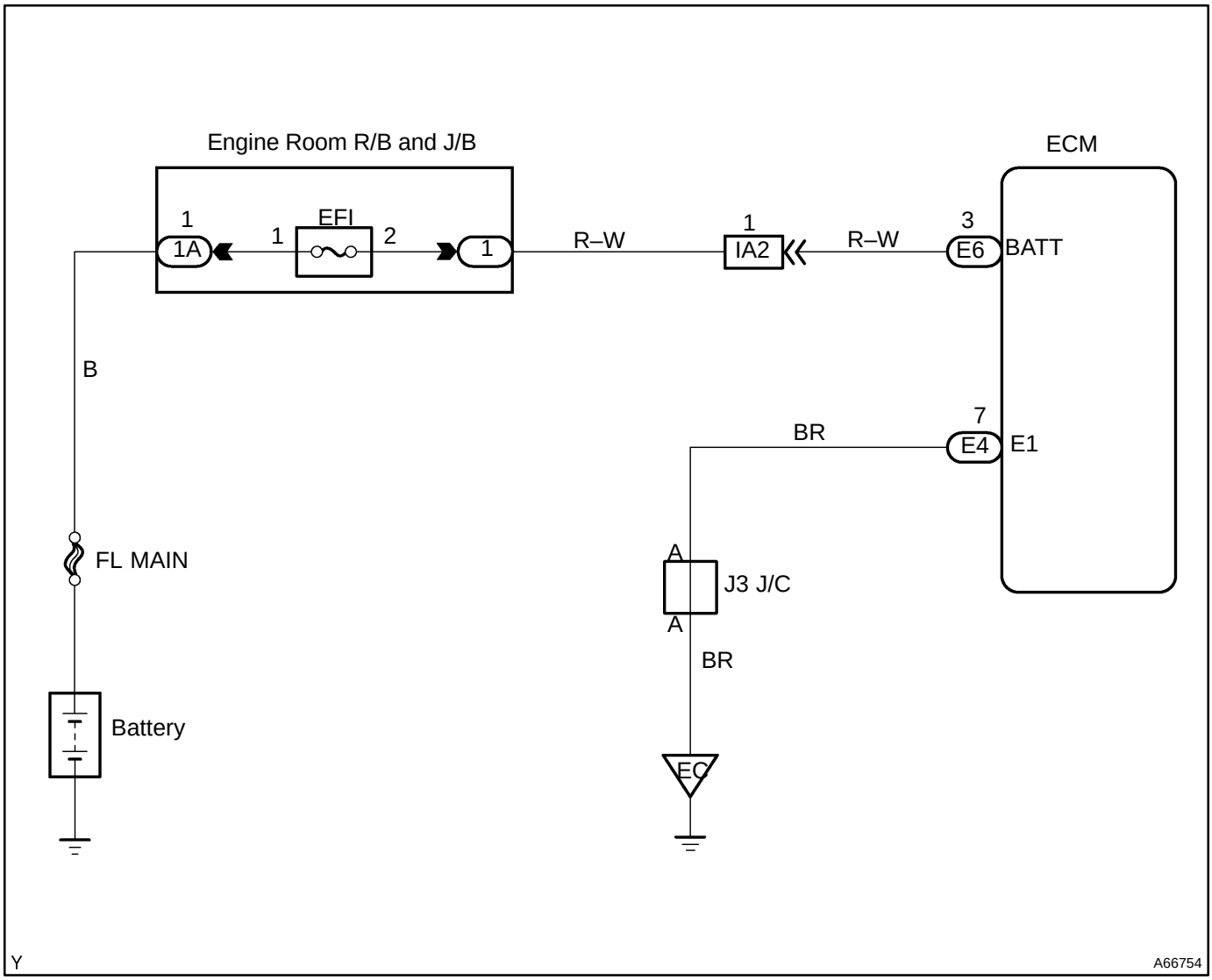

INSPECTION PROCEDURE

HINT:

Read freeze frame data using the hand–held tester or OBD II scan tool, as freeze frame data records the engine conditions when the malfunction is detected. When troubleshooting, it is useful for determining whether the vehicle was running or stopped, the engine was warmed up or not, the air–fuel ratio was lean or rich, etc. at the time of the malfunction.

1	INSPECT ECM(CHECK VOLTAGE)

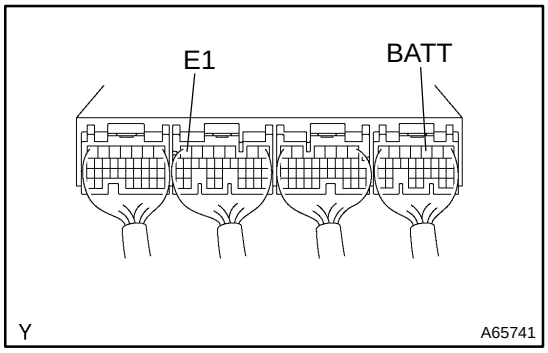

(a) Turn the ignition switch ON.
(b) Measure the voltage between terminal BATT of the ECM connector and E1 of the ECM connector.
Voltage: 9 – 14 V

OK → **CHECK AND REPLACE ECM**

NG

2	CHECK FUSE(E.F.I. FUSE)

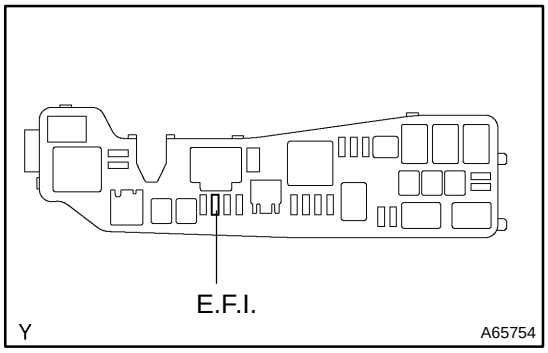

(a) Remove the E.F.I. fuse from the engine room R/B.
(b) Check the continuity of the E.F.I. fuse.
Result: Continuity

NG → **CHECK FOR SHORT IN ALL HARNESS AND COMPONENTS CONNECTED E.F.I. FUSE**

OK

3	CHECK WIRE HARNESS OR CONNECTOR(E.F.I. RELAY–ECM)

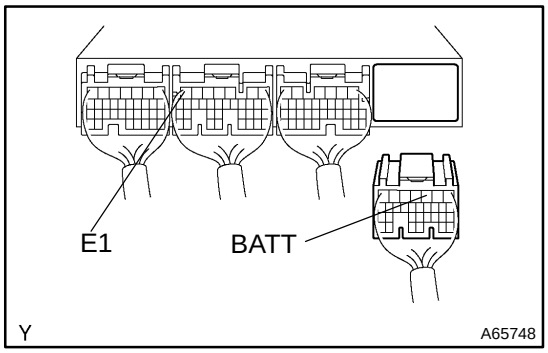

(a) Disconnect the ECM E6 connector.
(b) Remove the E.F.I. relay.
(c) Check continuity between the terminals BATT of the ECM connector and 3 of the E.F.I. relay installation relay block.
Resistance: 1 Ω or less
(d) Check for short between the terminals BATT of the ECM connector and E1 of the ECM connector.
Resistance: 1 MΩ or more

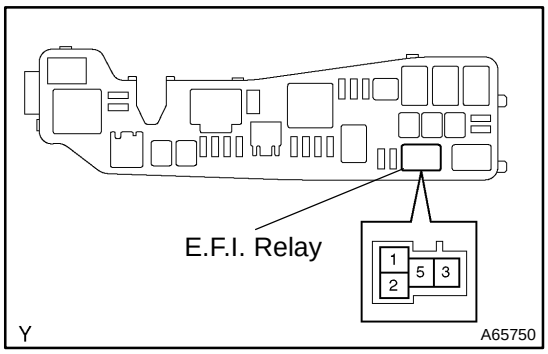

NG → **REPAIR OR REPLACE WIRE HARNESS OR CONNECTOR**

OK

CHECK AND REPLACE ECM

DTC	P1656	OCV CIRCUIT MALFUNCTION (BANK 1)

CIRCUIT DESCRIPTION

Refer to DTC P1349 on page 05–275.

DTC No.	DTC Detecting Condition	Trouble Area
P1656	Open or short in oil control valve circuit	• Open or short in oil control valve circuit • Oil control valve • ECM

WIRING DIAGRAM

Refer to DTC P1349 on page 05–275.

INSPECTION PROCEDURE

HINT:

Read freeze frame data using hand–held tester or OBD II scan tool. Because freeze frame records the engine conditions when the malfunction is detected, when troubleshooting it is useful for determining whether the vehicle was running or stopped, the engine warmed up or not, the air–fuel ratio lean or rich, etc. at the time of the malfunction

Hand–held tester:

1	PERFORM ACTIVE TEST BY HAND–HELD TESTER(OCV OPERATION)

(a) Start the engine and warm it up.
(b) Connect the hand–held tester and select the VVT on the ACTIVE TEST menu.
(c) Check the engine speed when operating the OCV by using the hand–held tester.
Result:
VVT system is OFF (OCV is OFF): Normal engine speed
VVT system is ON (OCV is ON): Rough idle or engine stalled

OK → **CHECK FOR INTERMITTENT PROBLEMS**

NG

2	INSPECT CAMSHAFT TIMING OIL CONTROL VALVE ASSY (See page 10–12)

NG → **REPLACE CAMSHAFT TIMING OIL CONTROL VALVE ASSY**

OK

3	INSPECT ECM(CHECK VOLTAGE) (See page 05–275)

NG → **CHECK AND REPLACE ECM**

OK

4	CHECK WIRE HARNESS OR CONNECTOR(ECM–OCV)

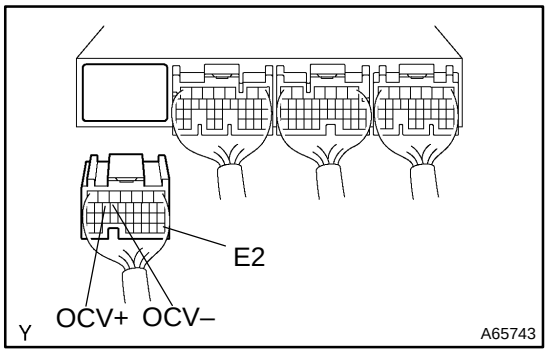

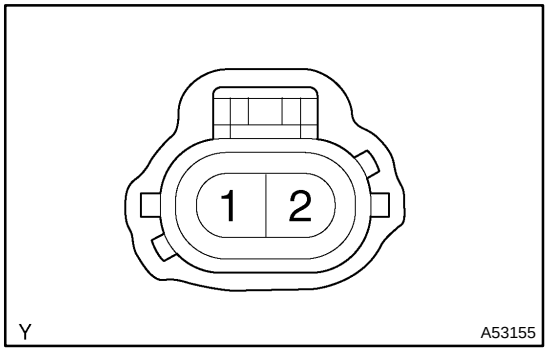

(a) Disconnect the ECM E3 connector.
(b) Disconnect the camshaft timing control valve connector.
(c) Check continuity between the terminals OCV+ of the ECM connector and 1 of the camshaft timing control valve connector.
Resistance: 1 Ω or less
(d) Check for short between the terminals OCV+ of the ECM connector and E2 of the ECM connector.
Resistance: 1 MΩ or more
(e) Check continuity between the terminals OCV– of the ECM connector and 2 of the camshaft timing control valve connector.
Resistance: 1 Ω or less
(f) Check for short between the terminals OCV– of the ECM connector and E2 of the ECM connector.
Resistance: 1 MΩ or more

NG → **REPAIR OR REPLACE WIRE HARNESS OR CONNECTOR**

OK

CHECK FOR INTERMITTENT PROBLEMS

OBD II scan tool (excluding hand–held tester):

1	CHECK OPERATION OF OCV

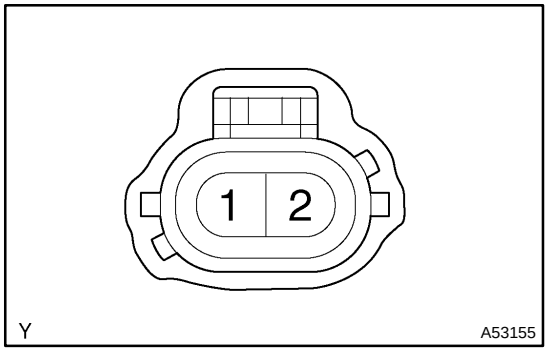

(a) Start the engine and warm it up.
(b) Disconnect the OCV connector.
(c) Apply battery positive voltage to the terminals of the OCV.
(d) Check the engine speed.
Result: Rough idle or engine stalled

NG → **REPLACE CAMSHAFT TIMING OIL CONTROL VALVE ASSY**

OK

2	INSPECT ECM(CHECK VOLTAGE)

NG → **CHECK AND REPLACE ECM**

OK

3	CHECK HARNESS AND CONNECTOR(ECM–OCV)

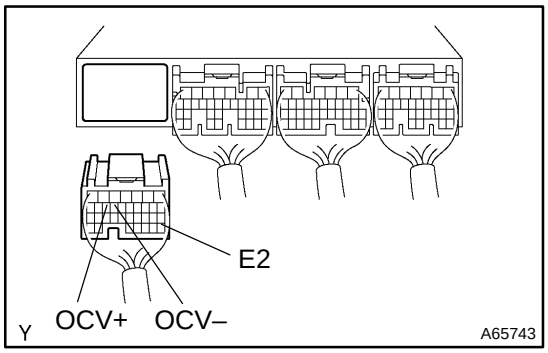

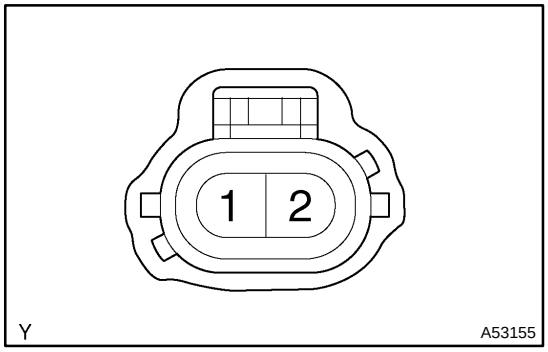

(a) Disconnect the ECM E3 connector.
(b) Disconnect the camshaft timing control valve connector.
(c) Check continuity between the terminals OCV+ of the ECM connector and 1 of the camshaft timing control valve connector.
Resistance: 1 Ω or less
(d) Check for short between the terminals OCV+ of the ECM connector and E2 of the ECM connector.
Resistance: 1 MΩ or more
(e) Check continuity between the terminals OCV– of the ECM connector and 2 of the camshaft timing control valve connector.
Resistance: 1 Ω or less
(f) Check for short between the terminals OCV– of the ECM connector and E2 of the ECM connector.
Resistance: 1 MΩ or more

NG → **REPAIR OR REPLACE HARNESS AND CONNECTOR**

OK

CHECK FOR INTERMITTENT PROBLEMS

DTC	P1690	OCV FOR VVTL CIRCUIT MULFUNCTION

CIRCUIT DESCRIPTION

When the engine speed reaches 6,200 rpm, the VVTL system switches the locker arm from low speed to high speed. The ECM control the OCV to apply hydraulic pressure to the piston in the locker arm and switch the locker arm by locking the slipper for high speed.

DTC No.	DTC Detecting Condition	Trouble Area
P1690	Open or short in oil control valve (for VVTL) circuit	• Open or short in oil control valve (for VVTL) circuit • Oil control valve (for VVTL) • ECM

WIRING DIAGRAM

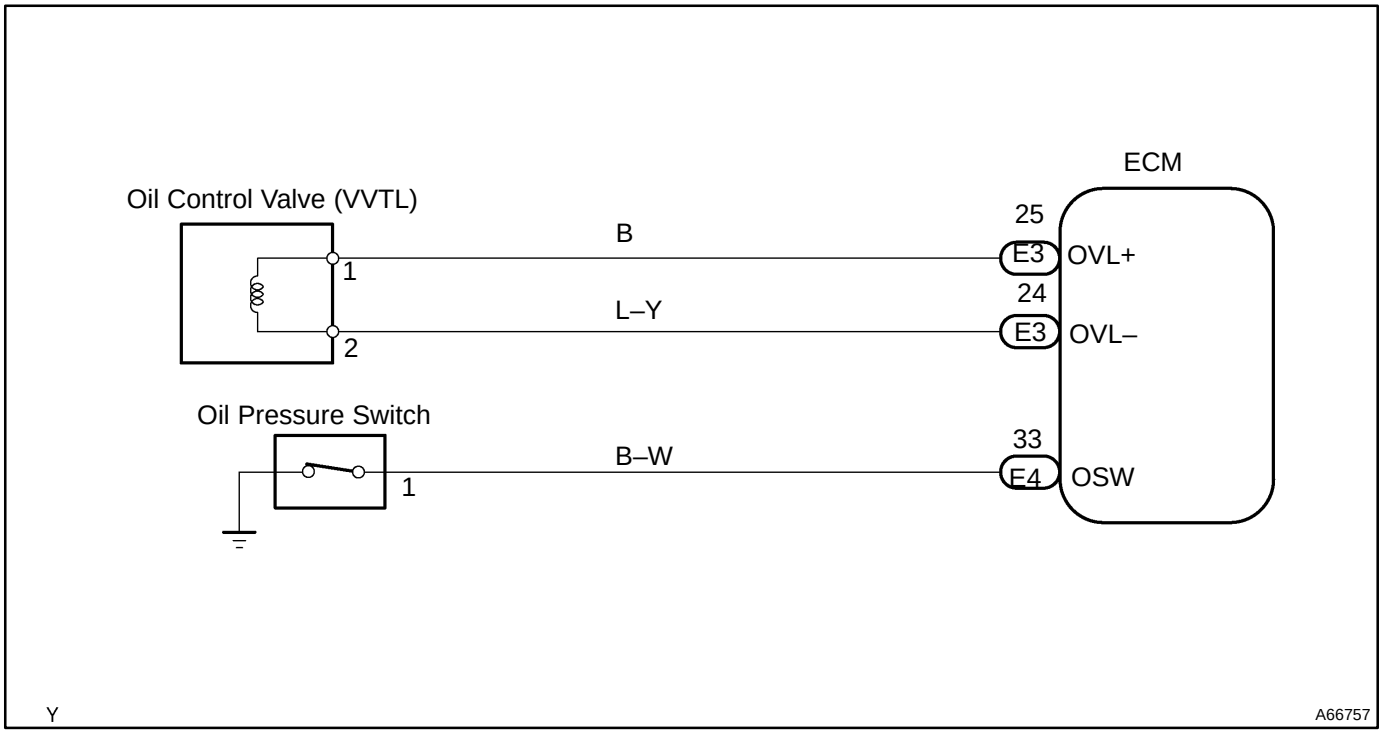

INSPECTION PROCEDURE

HINT:

Read freeze frame data using the hand–held tester or OBD II scan tool, as freeze frame data records the engine conditions when the malfunction is detected. When troubleshooting, it is useful for determining whether the vehicle was running or stopped, the engine was warmed up or not, the air–fuel ratio was lean or rich, etc. at the time of the malfunction.

Hand–held tester:

1	PERFORM ACTIVE TEST BY CAMSHAFT TIMING OIL CONTROL VALVE ASSY(for VVTL)

(a) Start the engine and warmed it up.
(b) Connect the hand–held tester and select VVTL from ACTIVE TEST menu.
(c) Maintain engine speed at 1,500 – 2,500 rpm.
(d) Check the engine speed when operate the OCV for VVTL by the hand–held tester.
Result:
VVTL system is OFF (OCV is OFF): Normal engine speed
VVTL system is ON (OCV is ON): Rough engine speed or engine stalled

OK → **CHECK FOR INTERMITTENT PROBLEMS**

NG

2	CHECK OIL CONTROL VALVE FILTER

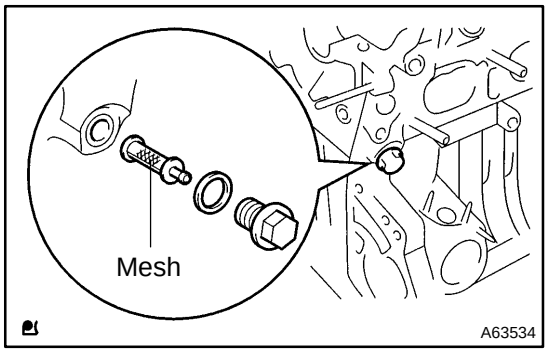

(a) Remove the generator. (See page 19–15)
(b) Remove the oil control valve filter.
(c) Check the oil control valve filter.
(1) Confirm that the filter is clear.
(d) Place a new gasket on the bolt and install the filter.
Torque: 29 N·m (300 kgf·cm, 22 ft·lbf)

NG → **REPLACE OIL CONTROL VALVE FILTER**

OK

3	INSPECT CAMSHAFT TIMING OIL CONTROL VALVE ASSY(for VVTL) (See page 10–12)

NG → **REPLACE CAMSHAFT TIMING OIL CONTROL VALVE ASSY**

OK

4	CHECK ECM(OVL+ – OVL–)

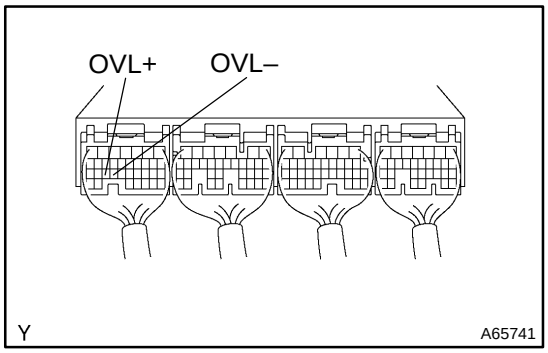

(a) Turn the ignition switch ON.
(b) Measure voltage between the terminals OVL+ and OVL– of the ECM connector.
Voltage: 9 – 14 V

NG → **CHECK AND REPLACE ECM**

OK

5	CHECK HARNESS AND CONNECTOR(ECM – OCV for VVTL)

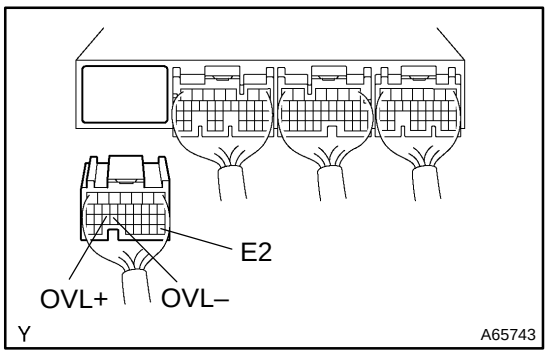

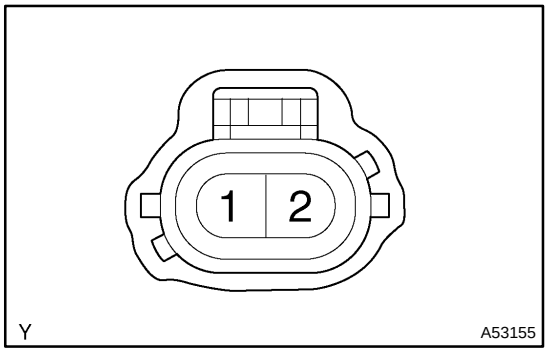

(a) Disconnect the ECM E3 connector.
(b) Disconnect the camshaft timing control valve connector.
(c) Check continuity between the terminals OVL+ of the ECM connector and 1 of the camshaft timing control valve connector.
Resistance: 1 Ω or less
(d) Check for short between the terminals OVL+ of the ECM connector and E2 of the ECM connector.
Resistance: 1 MΩ or more
(e) Check continuity between the terminals OVL– of the ECM connector and 2 of the camshaft timing control valve connector.
Resistance: 1 Ω or less
(f) Check for short between the terminals OVL– of the ECM connector and E2 of the ECM connector.
Resistance: 1 MΩ or more

NG → **REPAIR OR REPLACE HARNESS AND CONNECTOR**

OK

CHECK FOR INTERMITTENT PROBLEMS

OBD II scan tool (excluding hand–held tester) :

1	INSPECT CAMSHAFT TIMING OIL CONTROL VALVE ASSY(for VVTL) (See 10–12page)

NG → **REPLACE CAMSHAFT TIMING OIL CONTROL VALVE ASSY**

OK

2 CHECK ECM(OVL+ – OVL–)

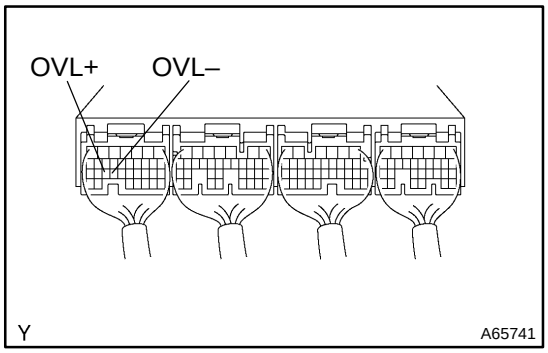

(a) Turn the ignition switch ON.
(b) Measure voltage between the terminals OVL+ and OVL– of the ECM connector.
Voltage: 9 – 14 V

NG → **CHECK AND REPLACE ECM**

OK

3 CHECK HARNESS AND CONNECTOR(ECM – OCV for VVTL)

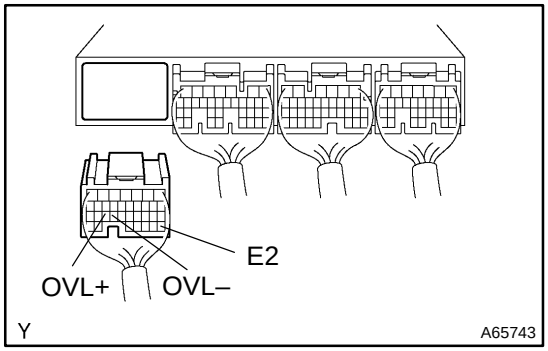

(a) Disconnect the ECM E3 connector.
(b) Disconnect the camshaft timing control valve connector.
(c) Check continuity between the terminals OVL+ of the ECM connector and 1 of the camshaft timing control valve connector.
Resistance: 1 Ω or less
(d) Check for short between the terminals OVL+ of the ECM connector and E2 of the ECM connector.
Resistance: 1 MΩ or more
(e) Check continuity between the terminals OVL– of the ECM connector and 2 of the camshaft timing control valve connector.
Resistance: 1 Ω or less
(f) Check for short between the terminals OVL– of the ECM connector and E2 of the ECM connector.
Resistance: 1 MΩ or more

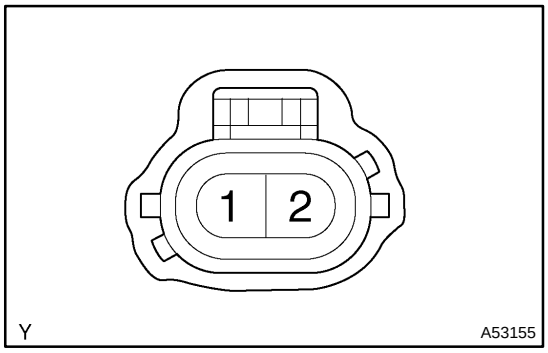

NG → **REPAIR OR REPLACE HARNESS AND CONNECTOR**

OK

CHECK FOR INTERMITTENT PROBLEMS

DTC	P1692	OCV FOR VVTL OPEN MALFUNCTION (BANK 1)

DTC	P1693	OCV FOR VVTL CLOSE MALFUNCTION (BANK 1)

CIRCUIT DESCRIPTION

Refer to DTC P1690 (OCV for VVTL Circuit Malfunction) on page 05–290.

DTC No.	DTC Detecting Condition	Trouble Area
P1692	In the condition that the engine speed is 6,200 rpm or less and the oil pressure switch on for 5 sec. or more	• Open or short in oil control valve circuit • Oil control valve (for VVTL) • Oil pressure switch for VVTL • ECM
P1693	In the condition that the water temperature is 60°C or more, the engine speed is 6,200 rpm or more, and the oil pressure switch OFF for 1 sec. or more	

WIRING DIAGRAM

Refer to DTC P1690 (OCV for VVTL Circuit Malfunction) on page 05–290.

Hand–held tester:

1	PERFORM ACTIVE TEST BY CAMSHAFT TIMING OIL CONTROL VALVE ASSY(for VVTL)

(a) Start the engine and warmed it up.
(b) Connect the hand–held tester and select VVTL from ACTIVE TEST menu.
(c) Maintain engine speed at 1,500 – 2,500 rpm.
(d) Check the engine speed when operate the OCV for VVTL by the hand–held tester.
Result:
VVTL system is OFF (OCV is OFF): Normal engine speed
VVTL system is ON (OCV is ON): Rough engine speed or engine stalled

NG → **Go to step 4**

OK

2	PERFORM ACTIVE TEST BY ENGINE OIL PRESSURE SWITCH ASSY(for VVTL)

(a) Start the engine and warmed it up.
(b) Connect the hand–held tester and select VVTL from ACTIVE TEST menu.
(c) Disconnect the oil pressure switch for VVTL connector.
(d) Maintain engine speed at 3,500 – 4,000 rpm.
(e) Measure continuity between the oil pressure switch and body ground when operate the OCV by the hand–held tester.
Result:
VVTL system is OFF (OCV is OFF): No continuity
VVTL system is ON (OCV is ON): Continuity

NG → **REPLACE ENGINE OIL PRESSURE SWITCH ASSY**

OK

3	CHECK HARNESS AND CONNECTOR(OIL PRESSURE SWITCH for VVTL – ECM)

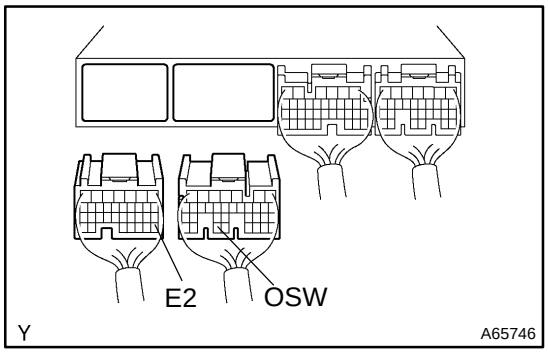

(a) Disconnect the oil pressure switch connector.
(b) Disconnect the ECM E3 and E4 connector.
(c) Check continuity between the terminals OSW of the ECM connector and oil pressure switch connector.
Resistance: 1 Ω or less
(d) Check for short between the terminals OSW and E2 of the ECM connector.
Resistance: 1 MΩ or more

NG → **REPAIR OR REPLACE HARNESS AND CONNECTOR**

OK

CHECK AND REPLACE ECM

4	CHECK OIL CONTROL VALVE FILTER

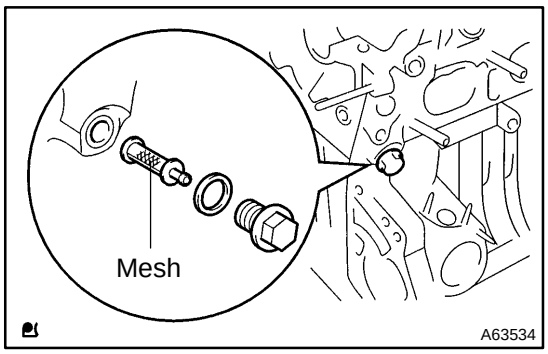

(a) Remove the generator. (See page 19–15)
(b) Remove the oil control valve filter.
(c) Check the oil control valve filter.
(1) Confirm that the filter is clear.
(d) Place a new gasket on the bolt and install the filter.
Torque: 29 N·m (300 kgf·cm, 22 ft·lbf)

NG → **REPLACE OIL CONTROL VALVE FILTER**

OK

5	INSPECT CAMSHAFT TIMING OIL CONTROL VALVE ASSY(for VVTL) (See page 10–12)

NG → **REPLACE CAMSHAFT TIMING OIL CONTROL VALVE ASSY**

OK

CHECK FOR INTERMITTENT PROBLEMS

OBD II scan tool (excluding hand–held tester) :

1	CHECK ENGINE OIL PRESSURE SWITCH ASSY(for VVTL)

(a) Disconnect the oil pressure switch for VVTL connector.
(b) Ignition switch OFF.
(c) Measure continuity between the oil pressure switch and body ground.
Resistance: No continuity

NG → **REPLACE ENGINE OIL PRESSURE SWITCH ASSY**

OK

2	CHECK HARNESS AND CONNECTOR(OIL PRESSURE SWITCH for VVTL – ECM)

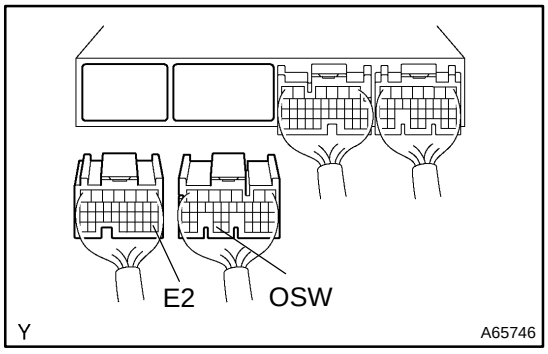

(a) Disconnect the oil pressure switch connector.
(b) Disconnect the ECM E3 and E4 connector.
(c) Check continuity between the terminals OSW of the ECM connector and oil pressure switch connector.
Resistance: 1 Ω or less
(d) Check for short between the terminals OSW and E2 of the ECM connector.
Resistance: 1 MΩ or more

NG → **REPAIR OR REPLACE HARNESS AND CONNECTOR**

OK

3	CHECK OIL CONTROL VALVE FILTER

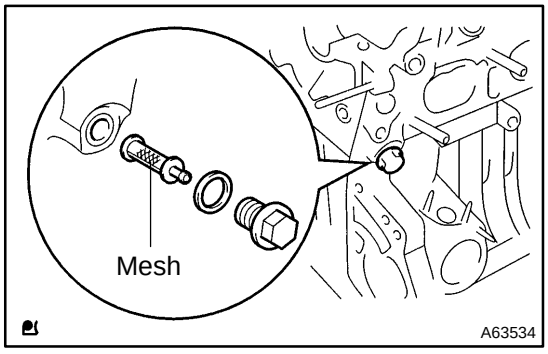

(a) Remove the generator. (See page 19–15)
(b) Remove the oil control valve filter.
(c) Check the oil control valve filter.
(1) Confirm that the filter is clear.
(d) Place a new gasket on the bolt and install the filter.
Torque: 29 N·m (300 kgf·cm, 22 ft·lbf)

NG → **REPLACE OIL CONTROL VALVE FILTER**

OK

4	INSPECT CAMSHAFT TIMING OIL CONTROL VALVE ASSY(for VVTL) (See page 10–12)

NG → REPLACE CAMSHAFT TIMING OIL CONTROL VALVE ASSY

OK

CHECK AND REPLACE ECM

DTC	P1780	PARK/NEUTRAL POSITION SWITCH MALFUNCTION

CIRCUIT DESCRIPTION

The neutral start switch goes on when the shift lever is in the N or P shift position. When it goes on, terminal NSW of the ECM is grounded to the body ground via the starter relay, thus the terminal NSW voltage becomes 0V. When the shift lever is in the D, 2, L or R position, the park/neutral position switch goes off, so the voltage of the ECM. Terminal NSW becomes battery voltage and the voltage of the ECM internal power source. If the shift lever is moved from the N position to the D position, this signal is used for air–fuel ratio correction and for idle speed control (estimated control), etc.

DTC No.	DTC Detecting Condition	Trouble Area
P1780	2 or more switches are ON simultaneously for N, 2, L and R positions (2 trip detection logic)When driving under conditions (a) and (b) for 30 seconds or more neutral start switch is ON (N position): (2 trip detection logic) (a) Vehicle speed: 70 km/h (44 mph) or more (b) Engine speed: 1,500 – 2,500 rpm	• Short in neutral start switch circuit • Neutral start switch • ECM

HINT:

After confirming DTC P1780, use the hand–held tester to confirm the neutral start switch signal from the CURRENT DATA.

WIRING DIAGRAM

Refer to DTC P1780 on page 05–475.

INSPECTION PROCEDURE

Refer to DTC P1780 on page 05–475.

DTC P0100 MASS AIR FLOW CIRCUIT MALFUNCTION

CIRCUIT DESCRIPTION

The mass air flow meter uses a platinum hot wire. The hot wire air flow meter consists of a platinum hot wire, thermistor and a control circuit installed in a plastic housing. The hot wire air flow meter works on the principle that the hot wire and thermistor located in the intake air bypass of the housing detect any changes in the intake air temperature.

The hot wire is maintained at the set temperature by controlling the current flow through the hot wire. This current flow is then measured as the output voltage of the air flow meter.

The circuit is constructed so that the platinum hot wire and thermistor provide a bridge circuit, with the power transistor controlled so that the potential of A and B remains equal to maintain the set temperature.

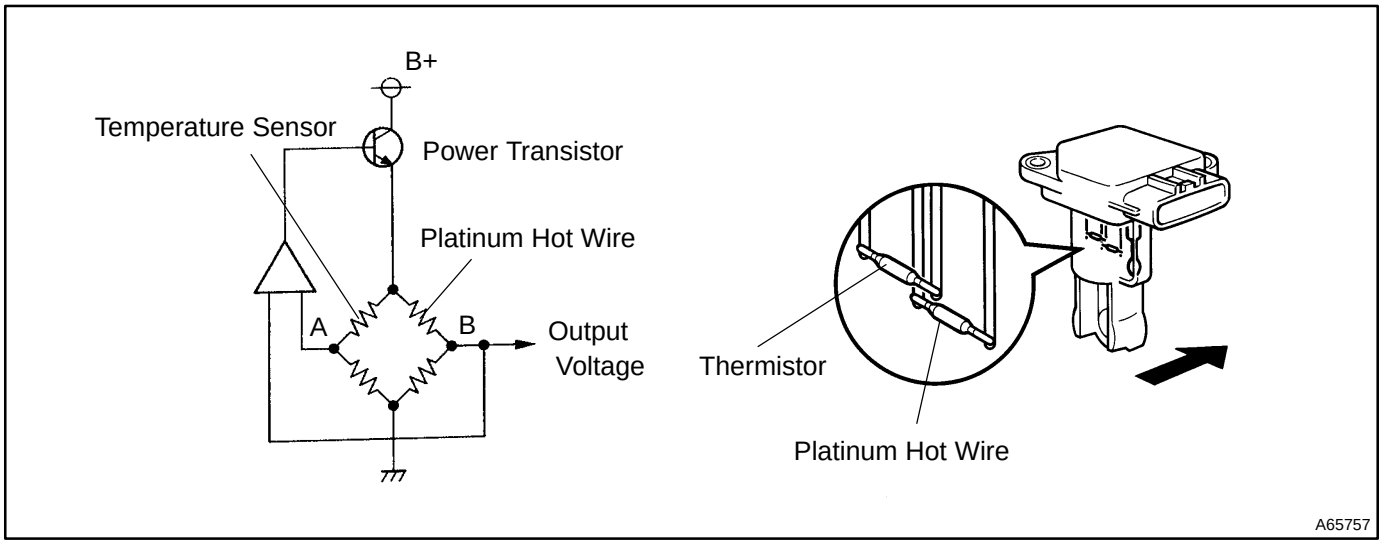

DTC No	DTC Detecting Condition	Trouble Area
P0100	Open or short in air flow meter circuit with more than 3 sec. engine speed less than 4,000 rpm	• Open or short in air flow meter circuit • Air flow meter • ECM

If the ECM detects DTC ”P0100” it operates the fail–safe function, keeping the ignition timing and injection volume constant and making it possible to drive the vehicle.

HINT:

After confirming DTC P0100, use the OBD II scan tool or hand–held tester to confirm the air flow ratio from CURRENT DATA.

Mass Air Flow Value (gm/sec.)	Malfunction
Approx. 0.0	• Mass air flow meter power source circuit open • VG circuit open or short
271.0 or more	• EVG circuit open

WIRING DIAGRAM

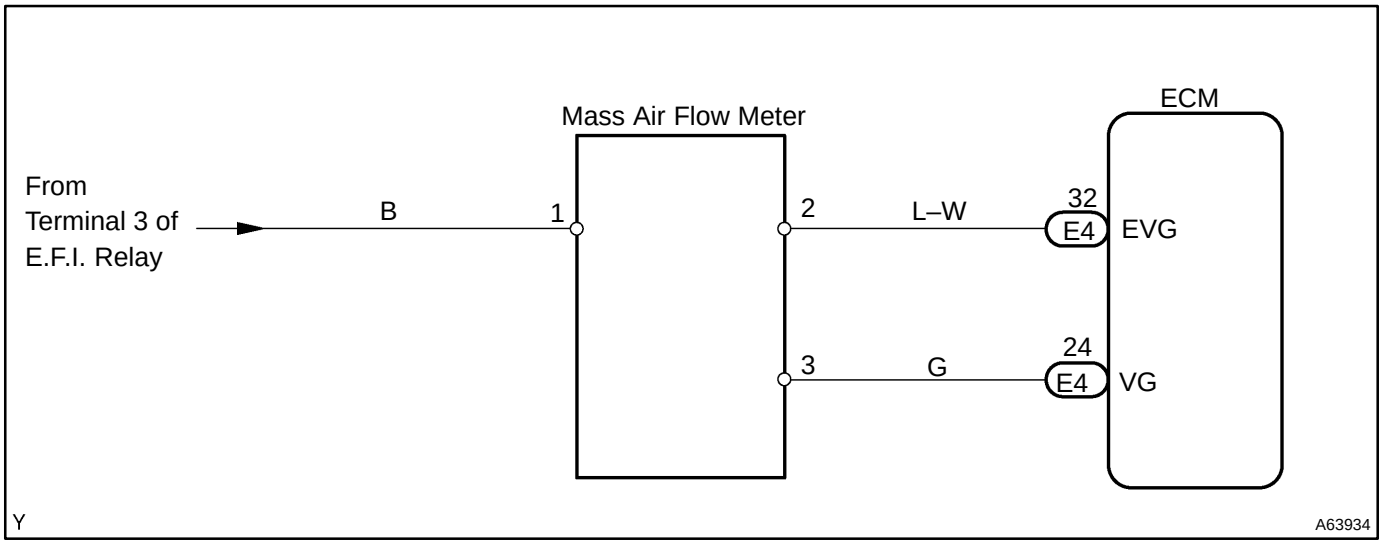

INSPECTION PROCEDURE

HINT:

Read freeze frame data using hand–held tester or OBD II scan tool. Because freeze frame records the engine conditions when the malfunction is detected, when troubleshooting it is useful for determining whether the vehicle was running or stopped, the engine warmed up or not, the air–fuel ratio lean or rich, etc. at the time of the malfunction.

1	READ VALUE OF OBD II SCAN TOOL OR HAND–HELD TESTER(MASS AIR FLOW RATE)

(a) Read mass air flow rate on the hand–held tester or OBD II scan tool.

Result:

	A	B
Mass air flow rate (gm/sec.)	0.0	271.0 or more

B → **Go to step 6**

A

2	INSPECT INTAKE AIR FLOW METER SUB–ASSY(POWER SOUCE VOLTAGE)

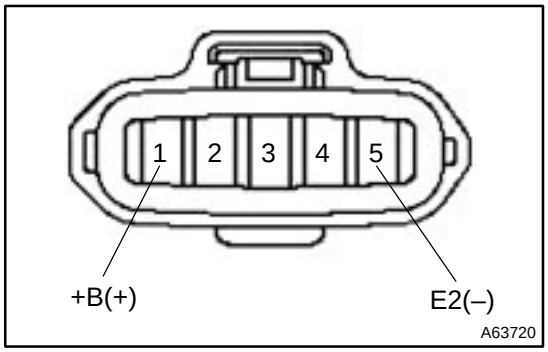

(a) Disconnect the mass air flow meter connector.
(b) Turn the ignition switch ON.
(c) Measure voltage between the terminals +B and E2 of the mass air flow meter connector.
Voltage: 9 – 14 V

NG → **Go to step 5**

OK

3 INSPECT ECM

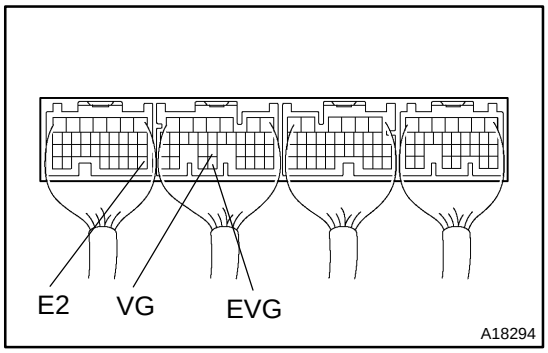

(a) Turn the ignition switch ON.
(b) Measure voltage between the terminals VG and EVG of the ECM connector while the engine is idling.
Voltage: 0.5 – 3.0 V

HINT:
The shift position should be P or N and A/C switch should be turned OFF.

NG → **CHECK AND REPLACE ECM**

OK

4 CHECK HARNESS AND CONNECTOR(ECM–MASS AIR FLOW METER)

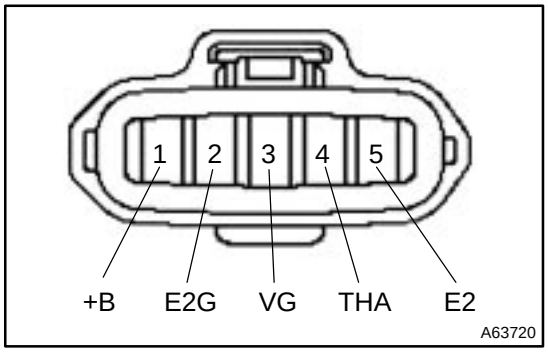

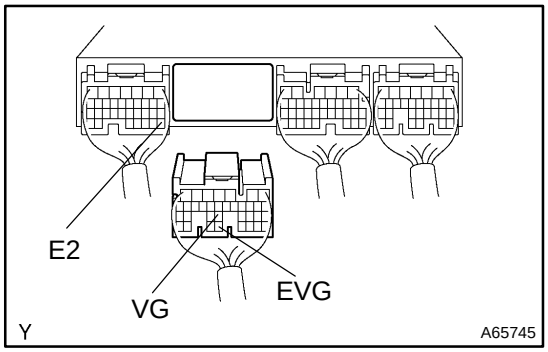

(a) Disconnect the mass air flow meter connector.
(b) Disconnect the ECM E4 connector.
(c) Check continuity between the terminals VG of the mass air flow meter harness connector and VG of the ECM connector.
Resistance: 1 Ω or less
(d) Check for open between the terminals E2G of the mass air flow meter connector and EVG of the ECM connector.
Resistance: 1 Ω or less
(e) Check for short between the terminals VG and EVG of the ECM connector.
Resistance: 1 MΩ or more
(f) Check for short between the terminals EVG and E2 of the ECM connector.
Resistance: 1 MΩ or more

NG → **REPAIR OR REPLACE HARNESS AND CONNECTOR**

OK

REPLACE INTAKE AIR FLOW METER SUB–ASSY

5	CHECK HARNESS AND CONNECTOR(E.F.I. RELAY–MASS AIR FLOW METER)

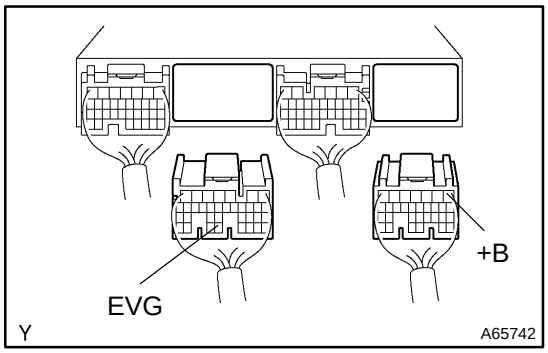

(a) Disconnect the battery negative (–) terminal.
(b) Disconnect the ECM E6 connector.
(c) Check continuity between the terminals +B of the ECM connector and 3 of the E.F.I. relay installation relay block.
Resistance: 1 Ω or less

(d) Check continuity between the terminals E2G of the mass air flow meter connector and EVG of the ECM connector.
Resistance: 1 Ω or less

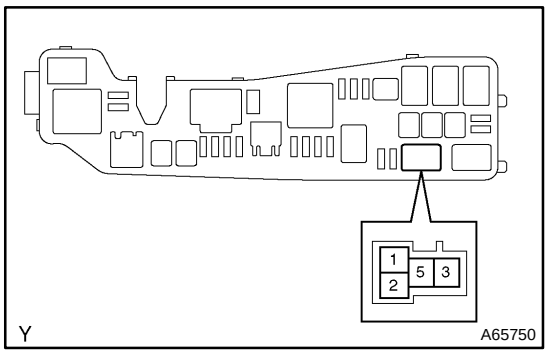

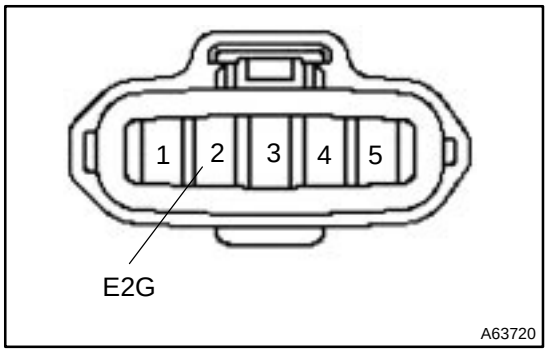

NG → **REPAIR OR REPLACE HARNESS AND CONNECTOR**

OK

CHECK FOR ECM POWER SOURCE CIRCUIT

6	INSPECT ECM

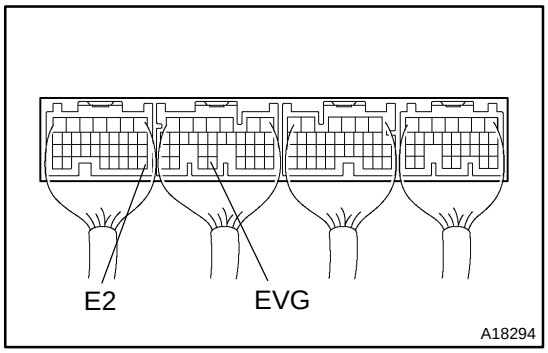

(a) Check continuity between the terminals EVG and E2 of the ECM connector.
Resistance: 1 Ω or less

NG → **CHECK AND REPLACE ECM**

OK

7	CHECK HARNESS AND CONNECTOR(ECM–MASS AIR FLOW METER)

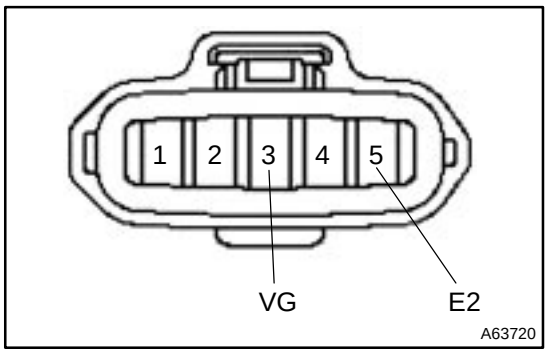

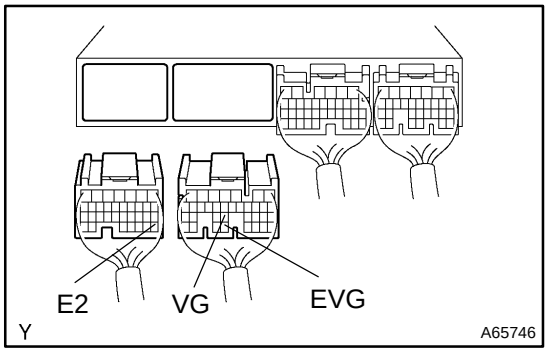

(a) Disconnect the mass air flow meter connector.
(b) Check for open between the terminals VG of the mass air flow meter connector and VG of the ECM connector.
Resistance: 1 Ω or less
(c) Check for open between the terminals E2 of the mass air flow meter harness connector and E2 of the ECM connector.
Resistance: 1 Ω or less
(d) Disconnect the ECM E3 and E4 connector.
(e) Check for short between the terminals VG and E2 of the ECM connector.
Resistance: 1 MΩ or more
(f) Check for short between the terminals EVG and E2 of the ECM connector.
Resistance: 1 MΩ or more

NG → **REPAIR OR REPLACE HARNESS AND CONNECTOR**

OK

CHECK AND REPLACE ECM

DTC	P0101	MASS AIR FLOW CIRCUIT RANGE/PERFORMANCE PROBLEM

CIRCUIT DESCRIPTION

Refer to DTC P0100 on page 05–177.

DTC No.	DTC Detecting Condition	Trouble Area
P0101	After engine is warmed up, conditions (a) and (b) continue with more than 10 sec. engine speed 900 rpm or less: (2 trip detection logic) (a) Throyyle valve fully closed (b) Mass air flow meter out put > 2.2 V (c) THW > 70°C (158°F)	• Mass air flow meter
	Conditions (a) and (b) continue with more than 10 sec. engine speed 1,500 rpm or more: (2 trip detection logic) (a) VTA ≧ 0.1 V (b) Mass air flow meter output < 1.00 V	

WIRING DIAGRAM

Refer to DTC P0100 on page 05–177 for the WIRING DIAGRAM.

INSPECTION PROCEDURE

HINT:

Read freeze frame data using hand–held tester or OBD II scan tool. Because freeze frame records the engine conditions when the malfunction is detected, when troubleshooting it is useful for determining whether the vehicle was running or stopped, the engine warmed up or not, the air–fuel ratio lean or rich, etc. at the time of the malfunction.

1	READ OUTPUT DTC(BESIDES P0101)

Result:

	A	B
RESULT	Only P0101 is output.	P0101 and other codes are output.

B → **REPLACE INTAKE AIR FLOW METER SUB–ASSY**

A

GO TO RELEVANT DTC CHART

DTC P0110 INTAKE AIR TEMP. CIRCUIT MALFUNCTION

CIRCUIT DESCRIPTION

(fig. 1)

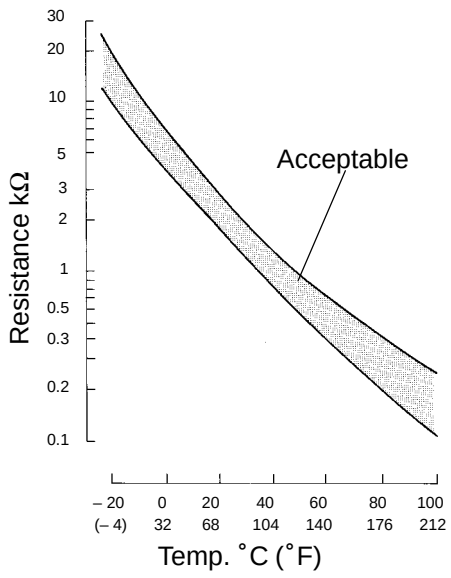

The intake air temp. sensor is built into the mass air flow meter and senses the intake air temperature.
A thermistor built in the sensor changes the resistance value according to the intake air temperature.
The lower the intake air temperature, the greater the thermistor resistance value, and the higher the intake air temperature, the lower the thermistor resistance value (See fig. 1).
The intake air temp. sensor is connected to the ECM (See below). The 5 V power source voltage in the ECM is applied to the intake air temp. sensor from the terminal THA via resistor R.
That is, the resistor R and the intake air temp. sensor are connected in series. When the resistance value of the intake air temp. sensor changes in accordance with changes in the intake air temperature, the potential at terminal THA also changes. Based on this signal, the ECM increases the fuel injection volume to improve driveability during cold engine operation.
If the ECM detects the DTC ”P0110”, it operates the fall safe function in which the intake air temperature is assumed to be 20°C (68°F).

DTC No.	DTC Detecting Condition	Trouble Area
P0110	Open or short in intake air temp. sensor circuit	• Open or short in intake air temp. sensor circuit • Intake air temp. sensor (inside mass air flow meter) • ECM

WIRING DIAGRAM

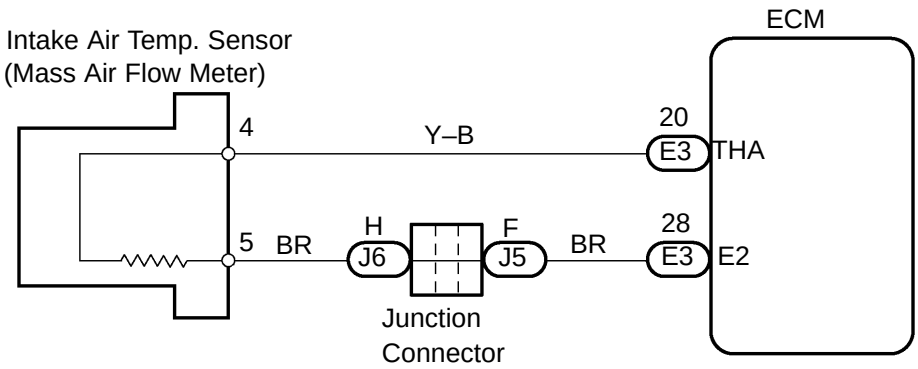

INSPECTION PROCEDURE

HINT:

- If DTCs P0100, P0101, P0110, P0115, P0116, P120 and P0121 are output simultaneously, E2 (sensor ground) may be open.
- Read freeze frame data using hand–held tester or OBD II scan tool. Because freeze frame records the engine conditions when the malfunction is detected, when troubleshooting it is useful for determining whether the vehicle was running or stopped, the engine warmed up or not, the air–fuel ratio lean or rich, etc. at the time of the malfunction.

1	READ VALUE OF OBD II SCAN TOOL OR HAND–HELD TESTER(INTAKE AIR TEMPERATURE)

(a) Read temperature value on the hand–held tester or OBD II scan tool.
Temperature: The same as actual intake air temperature

Result:

A	B	C
–40˚C (–40˚F)	140˚C (284˚F) or more	OK

B → **Go to step 4**

C → **CHECK FOR INTERMITTENT PROBLEMS**

A

2	READ VALUE OF OBD II SCAN TOOL OR HAND–HELD TESTER(CHECK FOR OPEN IN HARNESS)

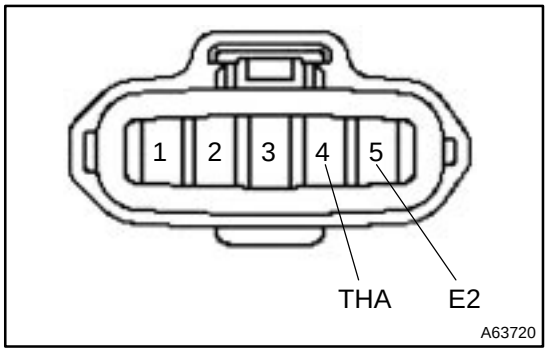

(a) Disconnect the mass air flow meter connector.
(b) Connect the terminal THA with E2.
(c) Turn the ignition switch ON.
(d) Read temperature value on the hand–held tester or OBD II scan tool.
Temperature: 140°C (284°F) or more

OK → **REPLACE INTAKE AIR FLOW METER SUB–ASSY**

NG

3	READ VALUE OF OBD II SCAN TOOL OR HAND–HELD TESTER(CHECK FOR OPEN IN ECM)

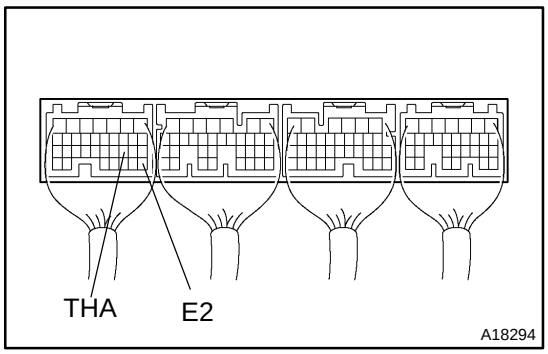

(a) Disconnect the mass air flow meter connector.
(b) Turn the ignition switch ON.
(c) Connect the terminals THA with E2 of the ECM connector.

HINT:
Before checking, do a visual check and connector connection and terminal inspection of the ECM.

(d) Read temperature value on the hand–held tester or OBD II scan tool.
Temperature: 140°C (284°F) or more

NG → **CHECK AND REPLACE ECM**

OK

READ VALUE OF HARNESS AND CONNECTOR

4	READ VALUE OF OBD II SCAN TOOL OR HAND–HELD TESTER(CHECK FOR SHORT IN HARNESS)

(a) Disconnect the mass air flow meter connector.
(b) Turn the ignition switch ON.
(c) Read temperature value on the hand–held tester or OBD II scan tool.
Temperature: –40°C(–40°F)

OK → **REPLACE INTAKE AIR FLOW METER SUB–ASSY**

NG

5	READ VALUE OF OBD II SCAN TOOL OR HAND–HELD TESTER(CHECK FOR SHORT IN ECM)

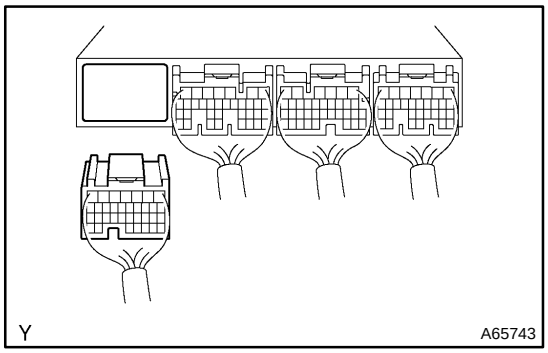

(a) Disconnect the the ECM E3 connector.
(b) Turn the ignition switch ON.
(c) Read temperature value on the hand–held tester or OBD II scan tool.
Temperature: –40°C (–40°F)

OK → **REPAIR OR REPLACE HARNESS AND CONNECTOR**

NG

CHECK AND REPLACE ECM

DTC	P0115	ENGINE COOLANT TEMP. CIRCUIT MALFUNCTION

CIRCUIT DESCRIPTION

A thermistor built into the engine coolant temp. sensor changes the resistance value according to the engine coolant temp.

The structure of the sensor and connection to the ECM is the same as in the intake air temp. circuit malfunction shown on page 05–183.

If the ECM detects the DTC P0115, it operates fail safe function in which the engine coolant temperature is assumed to be 80°C (176°F).

DTC No.	Detection Item	Trouble Area
P0115	Open or short in engine coolant temp. sensor circuit	• Open or short in engine coolant temp. sensor circuit • Engine coolant temp. sensor • ECM

HINT:

After confirming DTC P0115, use the hand–held tester or OBD II scan tool to confirm the engine coolant temp. from ”CURRENT DATA”.

Temp. Displayed	Malfunction
–40°C (–40°F)	Open circuit
140°C (284°F) or more	Short circuit

WIRING DIAGRAM

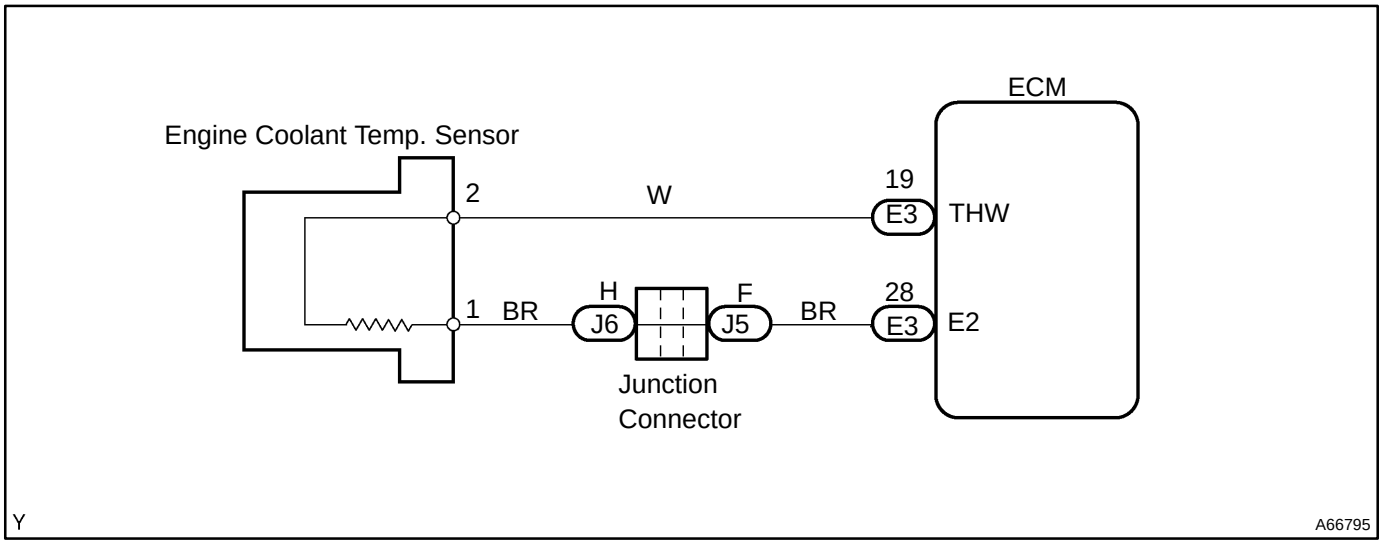

INSPECTION PROCEDURE

HINT:

- If DTC P0100 (Mass Air Flow Meter Circuit Malfunction), P0101 (Mass Air Flow Meter Circuit Range/ Performance Problem), P0110 (Intake Air Temp. Circuit Malfunction), P0115 (Engine coolant Temp. Circuit Malfunction), P0120 (Throttle/Pedal Position Sensor/Switch ”A” Malfunction) are output simultaneously, E1, E2 etc. (Sensor Ground system) may be open.
- Read freeze frame data using hand–held tester or OBD II scan tool. Because freeze frame records the engine conditions when the malfunction is detected, when troubleshooting it is useful for determining whether the vehicle was running or stopped, the engine warmed up or not, the air–fuel ratio lean or rich, etc. at the time of the malfunction.

1	READ VALUE OF OBD II SCAN TOOL OR HAND–HELD TESTER(ENGINE COOLANT TEMPERATURE)

(a) Read temperature value on the hand–held tester or OBD II scan tool.
Temperature: Same as actual water temperature

Result:

A	B	C
–40°C (–40°F)	140°C (284°F)	OK

B → **Go to step 4**

C → **CHECK FOR INTERMITTENT PROBLEMS**

A

2	READ VALUE OF OBD II SCAN TOOL OR HAND–HELD TESTER(CHECK FOR OPEN IN HARNESS)

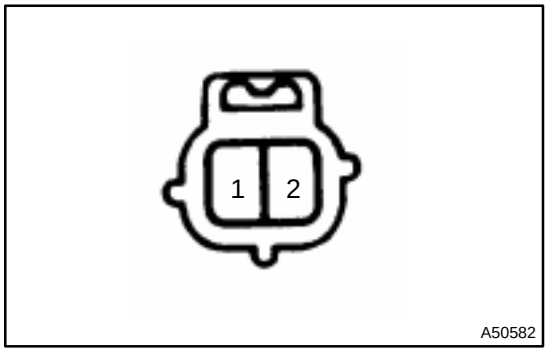

(a) Disconnect the engine coolant temperature sensor connector.
(b) Connect the terminals 1 with 2 of the engine coolant temperature sensor connector.
(c) Turn the ignition switch ON.
(d) Read temperature value on the hand–held tester or OBD II scan tool.
Temperature: 140°C (284°F) or more

OK → **REPLACE E.F.I. ENGINE COOLANT TEMPERATURE SENSOR**

NG

3	READ VALUE OF OBD II SCAN TOOL OR HAND–HELD TESTER(CHECK FOR OPEN IN ECM)

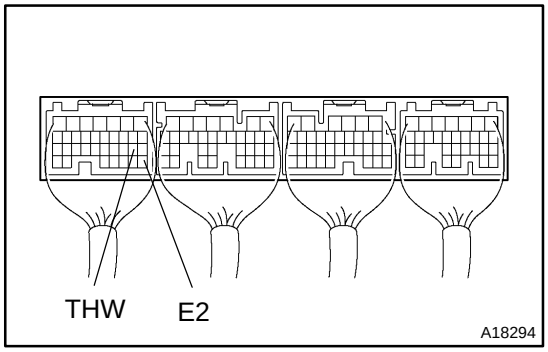

(a) Connect the terminals THW with E2 of the ECM connector.
(b) Turn the ignition switch ON.
(c) Read temperature value on the hand–held tester or OBD II scan tool.
Temperature: 140°C (284°F) or more

OK → **REPAIR OR REPLACE HARNESS AND CONNECTOR**

NG

CHECK AND REPLACE ECM

4	READ VALUE OF OBD II SCAN TOOL OR HAND–HELD TESTER(CHECK FOR SHORT IN HARNESS)

(a) Disconnect the water temp. sensor connector.
(b) Turn the ignition switch ON.
(c) Read temperature value on the hand–held tester or OBD II scan tool.
Temperature: –40°C (–40°F)

OK → **REPLACE E.F.I. ENGINE COOLANT TEMPERATURE SENSOR**

NG

5	READ VALUE OF OBD II SCAN TOOL OR HAND–HELD TESTER(CHECK FOR SHORT IN ECM)

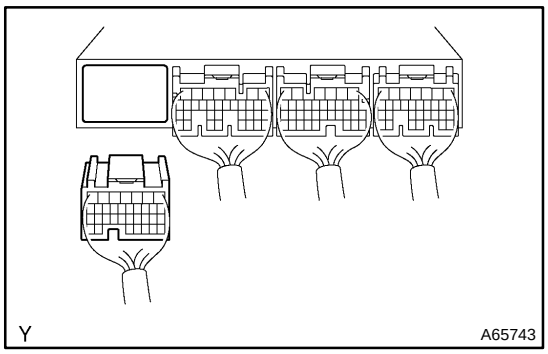

(a) Disconnect the ECM E3 connector.
(b) Turn the ignition switch ON.
(c) Read temperature value on the hand–held tester or OBD II scan tool.
Temperature: –40°C (–40°F)

OK → **REPAIR OR REPLACE HARNESS AND CONNECTOR**

NG

CHECK AND REPLACE ECM

DTC	P0116	ENGINE COOLANT TEMP. CIRCUIT RANGE/PERFORMANCE PROBLEM

CIRCUIT DESCRIPTION

Refer to DTC P0115 on page 05–186.

DTC No.	DTC Detecting Condition	Trouble Area
P0116	When engine starts, water temp. is –7˚C (20˚F) or less. And, 20 min. or more after engine starts, engine coolant temp. sensor value is 20˚C (68˚F) or less (2 trip detection logic)	• Cooling system • Engine coolant temp. sensor • Thermostat
	When the engine starts, water temp. is between –7˚C (20˚F) and 10˚C (50˚F). And, 5 min. or more after the engine starts, the engine coolant temp. sensor value is 20˚C (68˚F) or less (2 trip detection logic)	

INSPECTION PROCEDURE

HINT:

- If DTCs P0110, P0115, P0116, P0120 and P0121 are output simultaneously, engine coolant temperature sensor circuit may be open. Perform the troubleshooting of DTC P0115 first.
- Read freeze frame data using the hand–held tester or OBD scan tool, as freeze frame data records the engine conditions when the malfunction is detected. When troubleshooting, it is useful for determining whether the vehicle was running or stopped, the engine was warmed up or not, the air–fuel ratio was lean or rich, etc. at the time of the malfunction.

1 READ OUTPUT DTC(BESIDES P0116)

Result:

	A	B
RESULT	Only P0116 is output.	P0116 and other codes are output.

B → **GO TO RELEVANT DTC CHART**

A

2 INSPECT THERMOSTAT

NG → **REPLACE THERMOSTAT**

OK

REPLACE E.F.I. ENGINE COOLANT TEMPERATURE SENSOR

DTC	P0120	THROTTLE/PEDAL POSITION SENSOR/SWITCH ”A” CIRCUIT MALFUNCTION

CIRCUIT DESCRIPTION

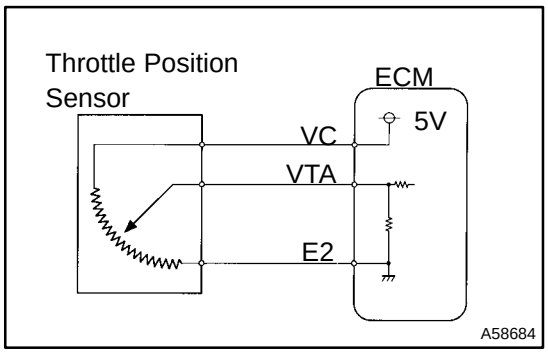

The throttle position sensor is mounted in the throttle body and detects the throttle valve opening angle.
When the throttle valve is fully closed, a voltage of approximately 0.3 – 1.0 V is applied to terminal VTA of the ECM. The voltage applied to the terminals VTA of the ECM increases in proportion to the opening angle of the throttle valve and becomes approximately 3.2 – 4.9 V when the throttle valve is fully opened. The ECM judges the vehicle driving conditions from these signals input from terminal VTA, uses it as one of the conditions for deciding the air–fuel ratio correction, power increase correction and fuel–cut control etc.

DTC No.	DTC Detecting Condition	Trouble Area
P0120	Condition (1) or (2) continues with more than 5 sec.: 1. VTA < 0.1 V 2. VTA > 4.9 V	• Open or short in throttle position sensor • Throttle position senor • ECM

HINT:
After confirming DTC P0120, use the hand–held tester or OBD II scan tool to confirm the throttle valve opening percentage.

Throttle valve opening position expressed as percentage		Trouble Area
Throttle valve fully closed	Throttle valve fully open	
0 %	0 %	VC circuit open VTA circuit open or short
Approx. 100 %	Approx. 100 %	E2 circuit open

WIRING DIAGRAM

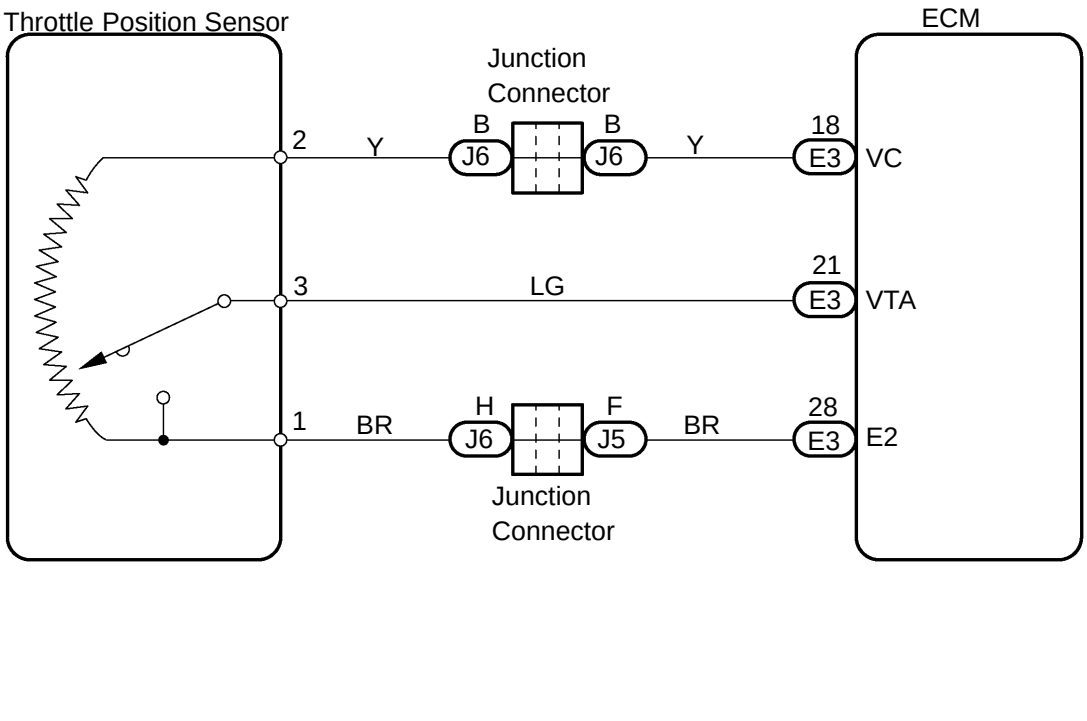

Y A66742

INSPECTION PROCEDURE

HINT:

- Read freed frame data using hand–held tester or OBD II scan tool. Because freeze frame records the engine conditions when the malfunction is detected, when troubleshooting it is useful for determining whether the vehicle was running or stopped, the engine warmed up or not, the air–fuel ratio lean or rich, etc. at the time of the malfunction.
- If DTC P0100 (Mass Air Flow Meter Circuit Malfunction), P0110 (Intake Air Temp. Circuit Malfunction), P0115 (Engine Coolant Temp. Circuit Malfunction), P0120 (Throttle/Pedal Position Sensor/Switch ”A” Malfunction) are output simultaneously, E1, E2 (Sensor Ground system) may be open.

1	READ VALUE OF OBD II SCAN TOOL OR HAND–HELD TESTER(THROTTLE VALVE OPENING PERCENTAGE)

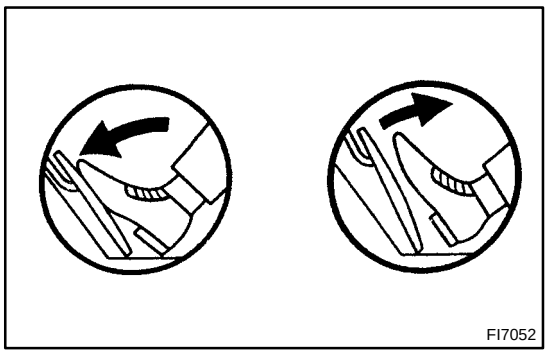

(a) Read the throttle valve opening percentage.

Result:

Throttle valve	Throttle valve opening position expressed as percentage
Fully open	Approx. 70 %
Fully closed	Approx. 10 %

OK → **CHECK FOR INTERMITTENT PROBLEMS**

NG

2	CHECK HARNESS AND CONNECTOR(CHECK VOLTAGE)

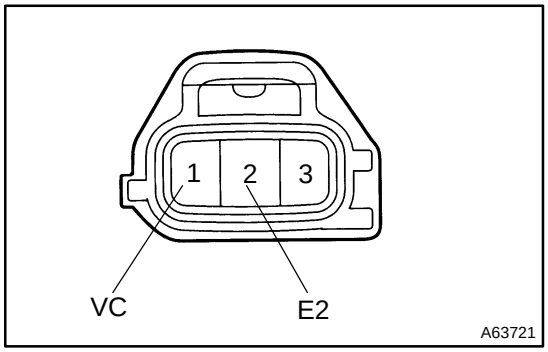

(a) Disconnect the throttle position sensor connector.
(b) Turn the ignition switch ON.
(c) Measure voltage between terminals VC and E2 of the throttle position sensor connector.
Voltage: 4.5 – 5.5 V

NG → **Go to step 6**

OK

3	INSPECT E.F.I. THROTTLE POSITION SENSOR

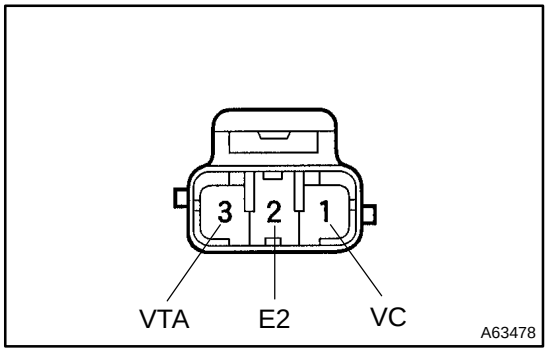

(a) Disconnect the throttle position sensor connector.
(b) Measure resistance between the terminals VC and E2 of the throttle position sensor.
(c) Measure resistance between the terminals VC and VTA of the throttle position sensor.

Resistance:

Terminals	Throttle valve	Resistance kΩ
1 – 2	—	2.5 – 5.9
1 – 3	Fully closed	0.2 – 5.7
1 – 3	Fully open	2.0 – 10.2

NG → **REPLACE E.F.I. THROTTLE POSITION SENSOR**

OK

4 INSPECT ECM(CHECK VOLTAGE)

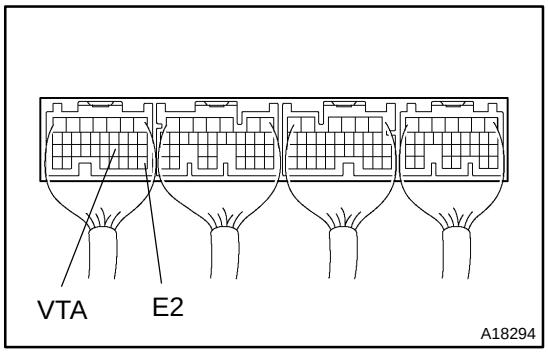

(a) Turn the ignition switch ON.
(b) Measure voltage between the terminals VTA and E2 of the ECM connector.

Voltage:

Throttle valve	Voltage V
Fully closed	0.3 – 1.0
Fully open	2.7 – 5.2

OK → **CHECK AND REPLACE ECM**

NG

5 CHECK HARNESS AND CONNECTOR(ECM–THROTTLE POSITION SENSOR)

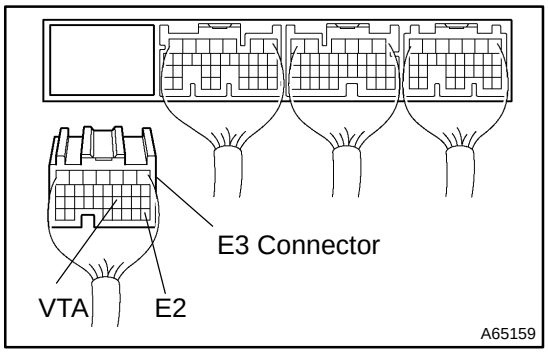

(a) Disconnect the throttle position sensor connector.
(b) Disconnect the ECM E3 connector.
(c) Check continuity between the terminals VTA of the ECM connector and VTA of the throttle position sensor connector.
Resistance:1 Ω or less
(d) Check for short between the terminals VTA and E2 of the ECM connector.
Resistance: 1 MΩ or more

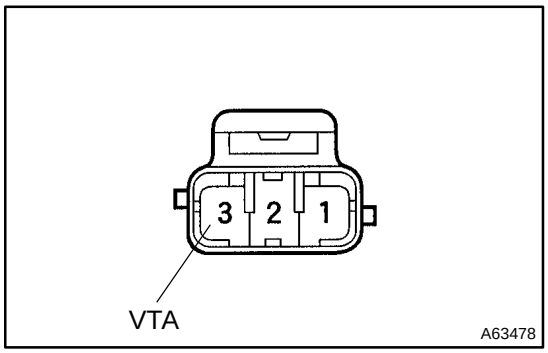

NG → **REPAIR OR REPLACE HARNESS AND CONNECTOR**

OK

CHECK AND REPLACE ECM

6	INSPECT ECM(CHECK VOLTAGE)

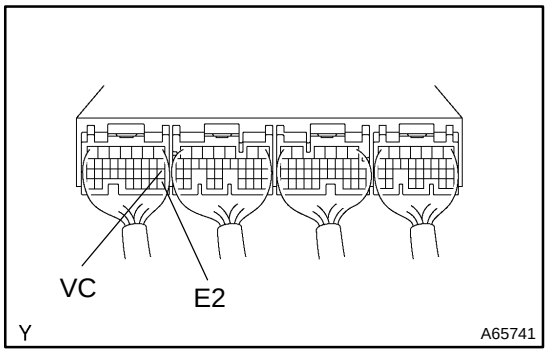

(a) Turn the ignition switch ON.
(b) Measure voltage between terminals VC and E2 of the ECM connector.
Voltage: 4.5 – 5.5 V

OK → **CHECK AND REPLACE ECM**

NG

7	CHECK HARNESS AND CONNECTOR(ECM–THROTTLE POSITION SENSOR)

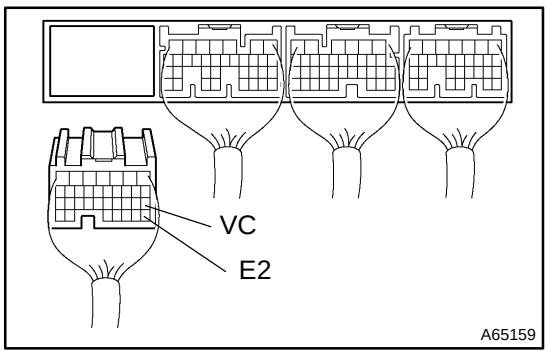

(a) Disconnect the throttle position sensor connector.
(b) Disconnect the ECM E3 connector.
(c) Check continuity between the terminals VC of the ECM connector and VC of the throttle position sensor connector.
Resistance: 1 Ω or less
(d) Check for short between the terminals VC and E2 of the ECM connector.
Resistance: 1 MΩ or more

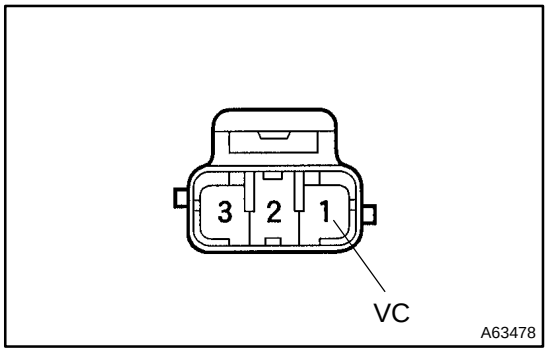

OK → **CHECK AND REPLACE ECM**

NG

REPAIR OR REPLACE HARNESS AND CONNECTOR

DTC	P0121	THROTTLE/PEDAL POSITION SENSOR/SWITCH ”A” CIRCUIT RANGE/PERFORMANCE PROBLEM

CIRCUIT DESCRIPTION

Refer to DTC P0120 on page 05–190.

DTC No.	DTC Detecting Condition	Trouble Area
P0121	After vehicle speed has been exceeded 30 km/h (19 mph) even once, output value of throttle position sensor is out of applicable range for vehicle speed is more than 0 km/h (0 mph). (2 trip detection logic)	• Throttle position sensor

INSPECTION PROCEDURE

HINT:

Read freeze frame data using the hand–held tester or OBD II scan tool, as freeze frame data records the engine conditions when the malfunction is detected. When troubleshooting, it is useful for determining whether the vehicle was running or stopped, the engine was warmed up or not, the air–fuel ratio was lean or rich, etc. at the time of the malfunction.

1	ARE THERE ANY DTC BEING OUTPUT(BESIDES P0121)

Result:

	A	B
RESULT	Only P0121 is output.	P0121 and other codes are output.

B → GO TO RELEVANT DTC CHART

A

REPLACE E.F.I. THROTTLE POSITION SENSOR

DTC	P0125	INSUFFICIENT COOLANT TEMP. FOR CLOSED LOOP FUEL CONTROL

CIRCUIT DESCRIPTION

To obtain a high purification rate of the CO, HC and NOx components of the exhaust gas, a three–way catalytic converter is used. For the most efficient use of the three–way catalytic converter, the air–fuel ratio must be precisely controlled so that it is always close to the stoichiometric air–fuel ratio.

The oxygen sensor has the characteristic that it provides output voltage* being approximately proportional to the existing air–fuel ratio. The oxygen sensor output voltage* is used to provide feedback for the ECM to control the air–fuel ratio.

By the oxygen sensor output, the ECM can determine the deviation amount from the stoichiometric air–fuel ratio and control the proper injection time immediately. If the oxygen sensor is out of order, ECM is unable to perform the accurate air–fuel ratio control.

The oxygen sensor is equipped with a heater which heats the zirconia element. The heater is controlled by the ECM. When the intake air volume is low (the temperature of the exhaust gas is low), the current flows to the heater to heat the sensor for the accurate oxygen concentration detection.

*: The voltage value changes at the inside of the ECM only.

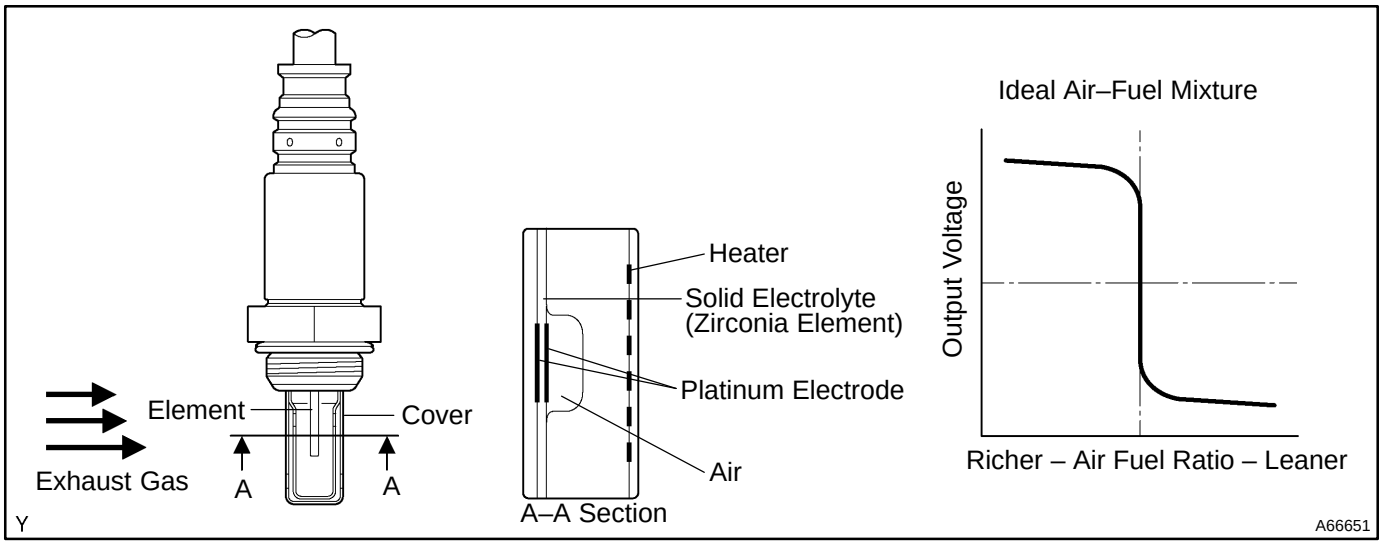

DTC No	DTC Detecting Condition	Trouble Area
P0125	After engine is warmed up, oxygen sensor output* does not change when conditions (a), (b), (c) and (d) continue for at least 1.5 min: *: Output value changes at inside of the ECM only (a) Engine speed: 1,500 rpm or more (b) Vehicle speed: 40 – 100 km/h (25 – 62 mph) (c) Throttle valve is not fully closed (d) 140 sec. or more after starting engine	• PCV hose • Open or short in oxygen sensor circuit • Oxygen sensor • Air induction system • Fuel pressure • Injector • Gas leak on exhaust system • ECM

HINT:

After confirming DTC P0125, use the hand–held tester or OBD II scan tool to confirm output voltage of the oxygen sensor from the CURRENT DATA.

WIRING DIAGRAM

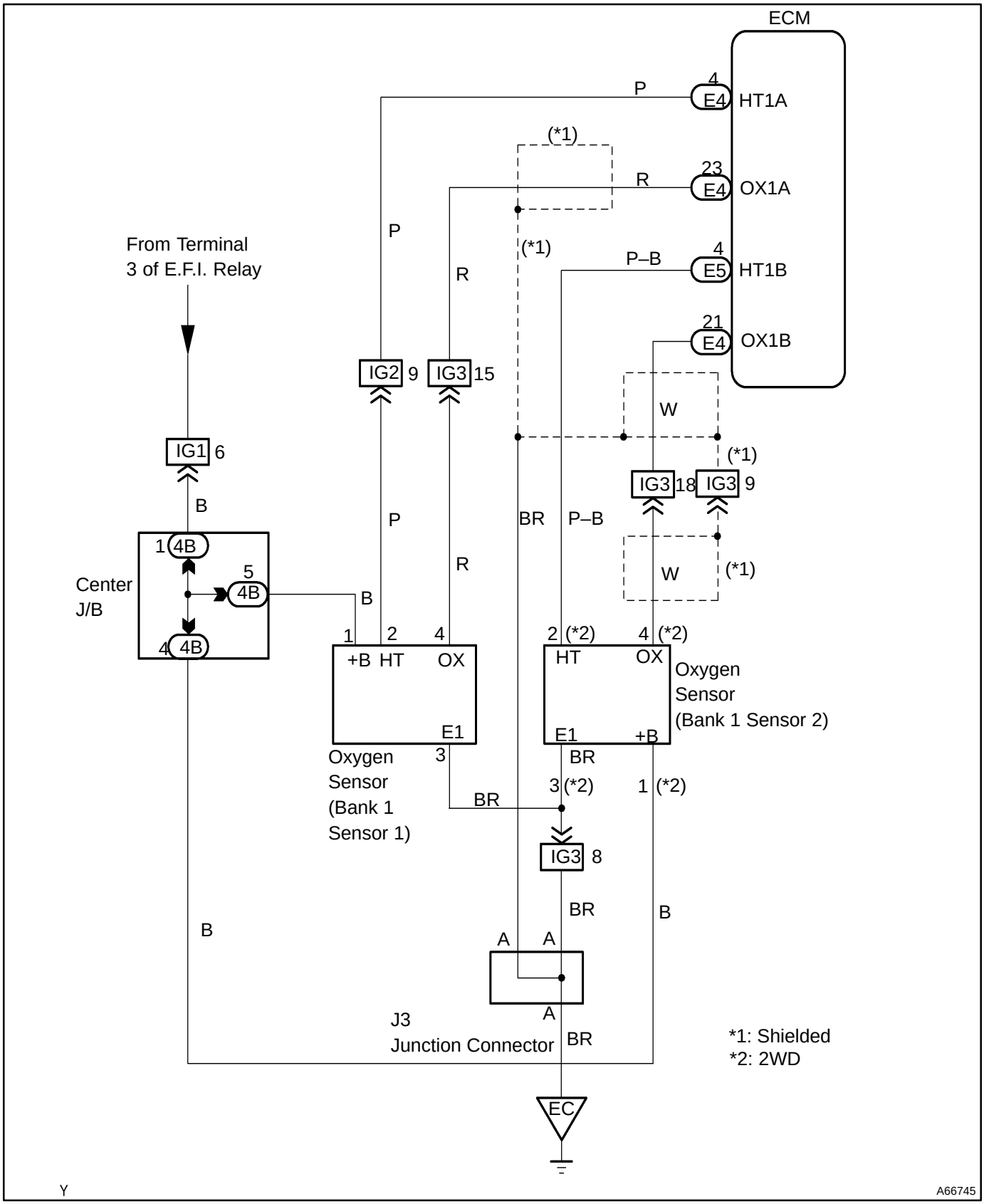

INSPECTION PROCEDURE

HINT:

Read freeze frame data using the hand–held tester or OBD II scan tool. Because freeze frame data records the engine conditions when the malfunction is detected. When troubleshooting, it is useful for determining whether the vehicle was running or stopped, the engine was warmed up or not, the air–fuel ratio was lean or rich, etc. at the time of the malfunction.

1	READ OUTPUT DTC(BESIDES P0125)

Result:

	A	B
RESULT	Only P0125 is output.	P0125 and other codes are output.

HINT:

If any other cord besides P0125 are output, perform the troubleshoot on that DTC before.

B → **GO TO RELEVANT DTC CHART**

A

2	READ VALUE OF OBD II SCAN TOOL OR HAND–HELD TESTER(OUTPUT VOLTAGE OF OXYGEN SENSOR)

(a) Warm up the oxygen sensor with the engine speed at 2,500 rpm for approx. 90 sec.

(b) Use the hand–held tester or OBD II scan tool to read the output voltage of the oxygen sensor during idling.

Oxygen sensor output voltage:

Alternates repeatedly between less than 0.4 V and more than 0.55 V (See the following table)

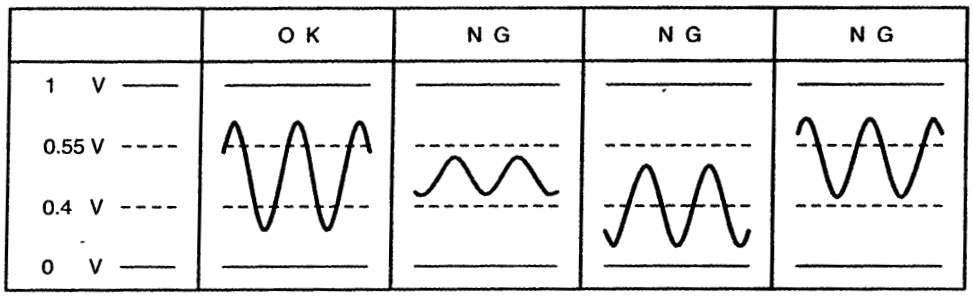

P18349

OK → **Go to step 10**

NG

3	CHECK CONNECTION OF PCV HOSE

NG → **REPAIR OR REPLACE PCV HOSE**

OK

4	CHECK WIRE HARNESS OR CONNECTOR(ECM–OXYGEN SENSOR)

NG → REPAIR OR REPLACE WIRE HARNESS OR CONNECTOR

OK

5	INSPECT OXYGEN SENSOR(OXYGEN SENSOR HEATER RESISTANCE)

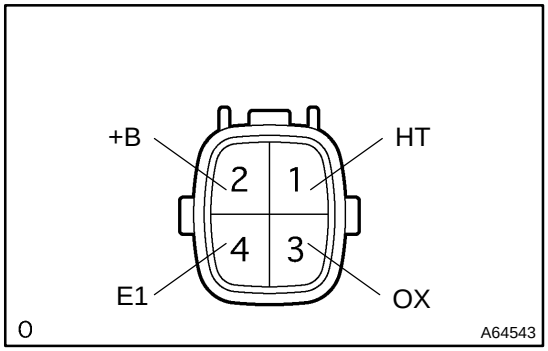

(a) Disconnect the oxygen sensor connector.
(b) Measure resistance between the terminals HT and +B of the oxygen sensor.
Resistance: 5 – 10 Ω (20°C)

NG → REPLACE OXYGEN SENSOR

OK

6	CHECK AIR INDUCTION SYSTEM (See page 12–13)

NG → REPAIR OR REPLACE AIR INDUCTION SYSTEM

OK

7	CHECK FUEL PRESSURE (See page 11–5)

NG → REPAIR OR REPLACE FUEL SYSTEM

OK

8	INSPECT FUEL INJECTOR ASSY (See page 11–7)

NG → REPLACE FUEL INJECTOR ASSY

OK

9	CHECK EXHAUST GAS LEAK

NG → REPAIR OR REPLACE EXHAUST GAS LEAKAGE POINT

OK

REPLACE OXYGEN SENSOR

10	PERFORM CONFIRMATION DRIVING PATTERN

GO

11	READ OUTPUT DTC(BESIDES P0125)

Result:

	A	B
RESULT	P0125 is not output.	P0125 is output.

B → CHECK FOR INTERMITTENT PROBLEMS

A

12	CONFIRM VEHICLE RUNS OUT OF FUEL IN THE PAST

NO → CHECK AND REPLACE ECM

YES

DTC IS CAUSED RUNNING OUT OF FUEL

DTC	P0128	THERMOSTAT MALFUNCTION

CIRCUIT DESCRIPTION

An Engine Coolant Temperature (ECT) sensor monitors the temperature of the coolant. This input is used by the Engine Control Module (ECM) for engine control and as enabling criteria for some diagnostics.
The airflow coming into the engine is accumulated and used to determine if the engine has been driven within conditions that would allow the engine coolant to heat up normally to the thermostat regulating temperature. If the coolant temperature dose not increase normally or does not reach regulating temperature of the thermostat, diagnostics that use the engine coolant temperature as enabling criteria, may not when expected. If engine coolant fails to reach a preset target temperature before a calculated airflow is accumulated, DTC P0128 will be set.

VEHICLE RESPONSE TO DTC SET

The ECM illuminates the malfunction indicator lamp (MIL) on the second consecutive ignition cycle that the diagnostic runs and fails.
The ECM records the operating first time the diagnostic fails, the ECM stores this information in the failure records. If the diagnostic reports a failure on the second consecutive ignition cycle, the ECM records the operating conditions at the time of the failure. The ECM writes the operating conditions to the Freeze Frame and updates the failure records.

CONDITIONS FOR CLEARING THE MIL/DTC

The MIL turns off after 3 consecutively passing trips without a fault. A history DTC clears after 40 consecutive warm–up cycles without a fault.

DTC No.	DTC Detection condition	Trouble Area
P0128	Conditions for running the DTC: • The ECT is between –10˚C (14˚F) and 35˚C (95˚F) • The IAT is between –10˚C (14˚F) and 35˚C (95˚F) • Difference between ECT and IAT is between –15˚C (5˚F) and 7˚C (13˚F) Conditions for setting the DTC: The Engine Coolant Temperature failed to reach at least 75˚C (167˚F) during the running of the coolant temperature counter diagnostic. (2 trip detection logic)	• Thermostat • Cooling fan operation • Cooling system • ECM

INSPECTION PROCEDURE

- If DTC P0115 or P0116 is output, first troubleshoot DTC P0115 or P0116. If no malfunction is detected, troubleshoot DTC P0128 next.
- Read freeze frame data using TOYOTA hand–held tester or OBD II scan tool. Because freeze frame records the engine conditions when the malfunction is detected. When troubleshooting, it is useful for determining whether the vehicle was running or stopped, the engine was warmed up or not, the air–fuel ratio was lean or rich, etc. at the time of the malfunction.

1	CHECK COOLING FAN SYSTEM(See page16–4)

NG → REPAIR OR REPLACE COOLING FAN SYSTEM

OK

2	CHECK THERMOSTAT (See page 16–2)

NG → REPLACE THERMOSTAT

OK

CHECK AND REPLACE ECM

DTC	P0130	HEATED OXYGEN SENSOR CIRCUIT MALFUNCTION (BANK 1 SENSOR 1)

CIRCUIT DESCRIPTION

Refer to DTC P0125 on page 05–196.

DTC No	DTC Detecting Condition	Trouble Area
P0130	Voltage output of oxygen sensor remains at 0.4 V or more, or 0.55 V or less, during idling after engine is warmed up (2 trip detection logic)	• Open or short in oxygen sensor circuit • Oxygen sensor • Air induction system • Fuel pressure • Injector • ECM

HINT:

- Bank 1 refers to bank that includes cylinder No. 1.
- Sensor 1 refers to the sensor closer to the engine body.
- The oxygen sensor’s output voltage and the short−term fuel trim value can be read using the hand−held tester or OBD II scan tool.

WIRING DIAGRAM

Refer to DTC P0125 on page 05–196.

CONFIRMATION DRIVING PATTERN

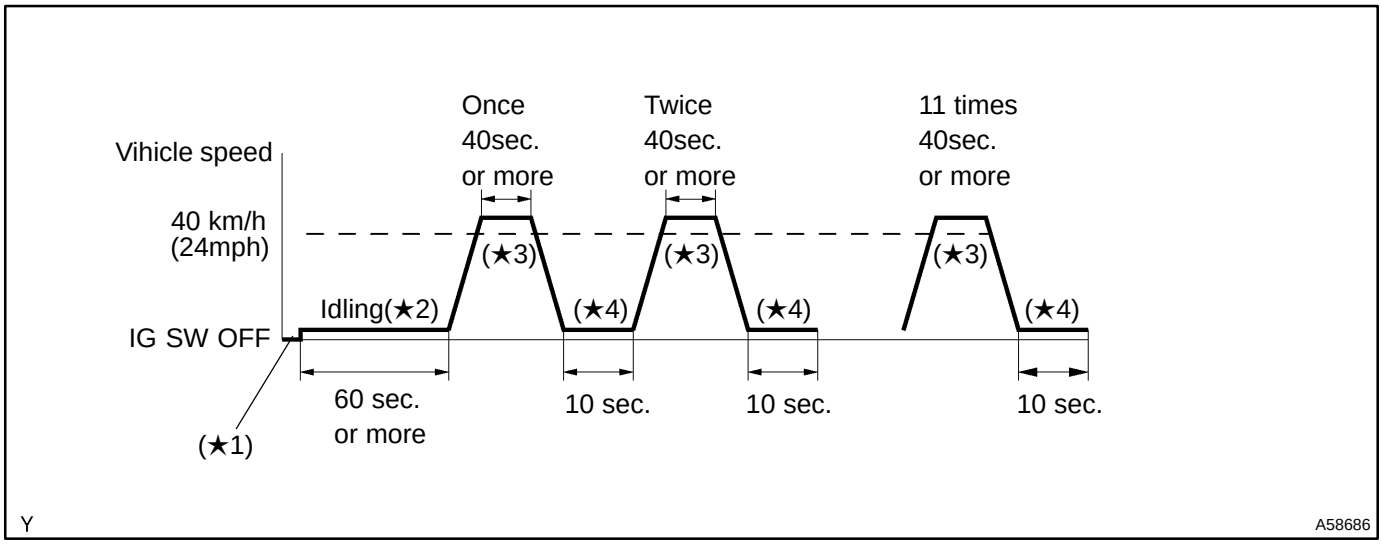

1. **Connect the hand–held tester or OBD II scan tool to the DLC3.**
2. **Switch the hand–held tester or OBD II scan tool from the normal mode to the check (test) mode (See page 05–157). (★1)**
3. **Start the engine and let the engine idle for 60 seconds or more. (★2)**
4. **Drive the vehicle at 40 km/h (24 mph) or more for 40 seconds or more. (★3)**
5. **Let the engine idle for 10 seconds or more. (★4)**
6. **Preform steps (★3) to (★4) 11 times. (★5)**

HINT:

If a malfunction exists, the MIL will light up on the multi information display during step (★5).

NOTICE:

If the conditions in this test are not strictly followed, detection of the malfunction will not be possible. If you do not have a hand–held tester, turn the ignition switch OFF after performing steps from (★2) to (★5), then perform steps from (★2) to (★5) again.

INSPECTION PROCEDURE

HINT:

Read freeze frame data using the hand–held tester or OBD II scan tool, as freeze frame data records the engine conditions when the malfunction is detected. When troubleshooting, it is useful for determining whether the vehicle was running or stopped, the engine was warmed up or not, the air–fuel ratio was lean or rich, etc. at the time of the malfunction.

1	READ OUTPUT DTC(BESIDES P0130)

Result:

	A	B
RESULT	P0130 are output.	P0130 other codes are output.

B → **GO TO RELEVANT DTC CHART**

A

2	READ VALUE OF HAND–HELD TESTER(OUTPUT VOLTAGE OXYGEN SENSOR)

(a) Warm up the oxygen sensor with the engine speed at 2,500 rpm for approx. 90 sec.
(b) Use the hand–held tester or OBD II scan tool to read the output voltage of the oxygen sensor during idling.

Oxygen sensor output voltage:
Alternates repeatedly between less than 0.4 V and more than 0.55 V (See the following table)

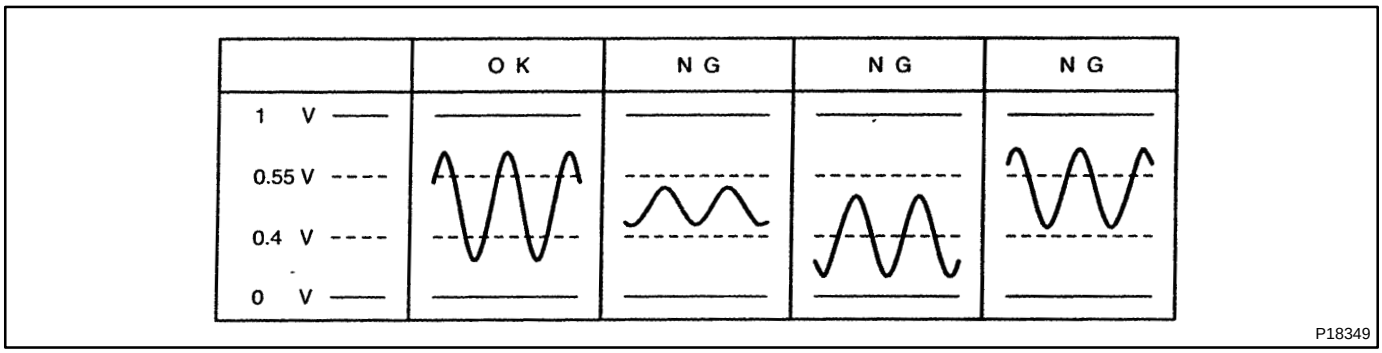

OK → **Go to step 9**

NG

3	CHECK HARNESS AND CONNECTOR(ECM–OXYGEN SENSOR)

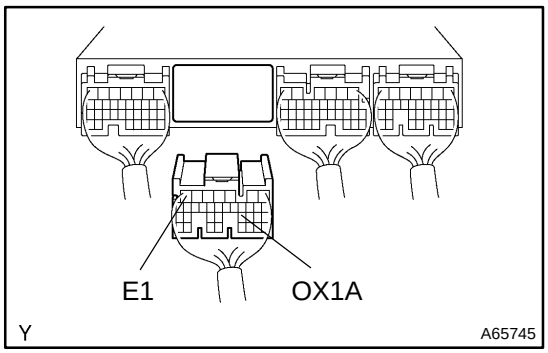

(a) Disconnect the oxygen sensor connector.
(b) Disconnect the ECM E4 connector.
(c) Check continuity between the terminals OX1A of the ECM connector and OX of the oxygen sensor connector.
Resistance: 1 Ω or less

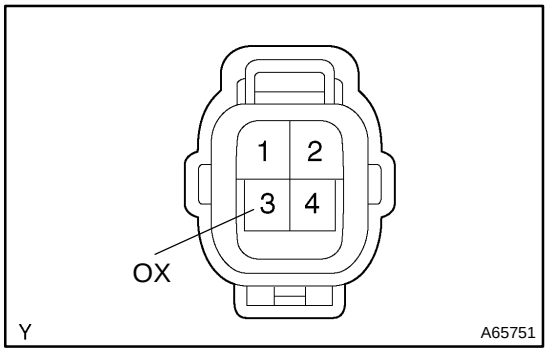

(d) Check for short between the terminals OX1A and E1 of the ECM connector.
Resistance: 1 MΩ or more

NG → **REPAIR OR REPLACE HARNESS AND CONNECTOR**

OK

4	CHECK WHETHER MISFIRE IS OCCURRED OR NOT BY MONITORING DTC AND DATA LIST (See page 05–157)

NG → CHECK FOR SPARK AND IGNITION

OK

5	CHECK AIR INDUCTION SYSTEM (See page 12–13)

NG → REPAIR OR REPLACE AIR INDUCTION SYSTEM

OK

6	CHECK FUEL PRESSURE (See page 11–5)

NG → REPAIR OR REPLACE FUEL SYSTEM

OK

7	CHECK FUEL INJECTOR ASSY (See page 11–7)

NG → REPLACE FUEL INJECTOR ASSY

OK

8	CHECK EXHAUST GAS LEAK

(a) Clear the DTC.
(b) Warm up the oxygen sensor by a driving test to check the system.
HINT:
Refer to CONFIRMATION DRIVING PATTERN.

NG → REPAIR OR REPLACE EXHAUST GAS LEAKAGE POINT

OK

REPLACE OXYGEN SENSOR

9	PERFORM CONFIRMATION DRIVING PATTERN

(a) Clear the DTC.
(b) Warm up the oxygen sensor by a driving test to check the system.
HINT:
Refer to CONFIRMATION DRIVING PATTERN.

GO

10	READ OUTPUT DTC(BESIDS P0130)

SST 09843–18040

Result:

	A	B
RESULT	P0130 are output again.	P0130 other codes are not output again.

B → **CHECK AND REPLACE ECM**

A

11	CONFIRM VEHICLE RUNS OUT OF FUEL IN THE PAST

(a) Confirm if the vehicle ran out of fuel or not in the past.

HINT:

There is no problem, if DTC P0130 is not output after the CONFIRMATION DRIVING PATTERN. This means that the ECM records DTC P0130 because of the running out of fuel in the past.

NO → **CHECK FOR INTERMITTENT PROBLEMS**

YES

DTC IS CAUSED RUNNING OUT OF FUEL

DTC	P0133	HEATED OXYGEN SENSOR SLOW RESPONSE (BANK 1 SENSOR 1)

CIRCUIT DESCRIPTION

Refer to DTC P0125 on page 05–196.

DTC No	DTC Detecting Condition	Trouble Area
P0133	Response time for oxygen sensor's voltage output to change from rich to lean, or from lean to rich, is 0.8 sec. or more during idling after engine is warmed up (2 trip detection logic)	• Open or short in oxygen sensor circuit • Oxygen sensor • Air induction system • Fuel pressure • Injector • ECM

HINT:

- Bank 1 refers to bank that includes cylinder No. 1.
- Sensor 1 refers to the sensor closer to the engine body.
- The oxygen sensor's output voltage and the short−term fuel trim value can be read using the hand−held tester or OBD II scan tool.

WIRING DIAGRAM

Refer to DTC P0125 on page 05–196.

INSPECTION PROCEDURE

HINT:

Read freeze frame data using hand–held tester or OBD II scan tool. Because freeze frame records the engine conditions when the malfunction is detected, when troubleshooting it is useful for determining whether the vehicle was running or stopped, the engine warmed up or not, the air–fuel ratio lean or rich, etc. at the time of the malfunction.

1	READ OUTPUT DTC(BESIDES P0133)

Result:

	A	B
RESULT	P0133 is output.	P0133 and other codes are output.

B → GO TO RELEVANT DTC CHART

A

2	READ VALUE OF HAND–HELD TESTER(OUTPUT VOLTAGE OXYGEN SENSOR)

(a) Warm up the oxygen sensor with the engine speed at 2,500 rpm for approx. 90 sec.
(b) Use the hand–held tester or OBD II scan tool to read the output voltage of the oxygen sensor during idling.

Oxygen sensor output voltage:
Alternates repeatedly between less than 0.4 V and more than 0.55 V (See the following table)

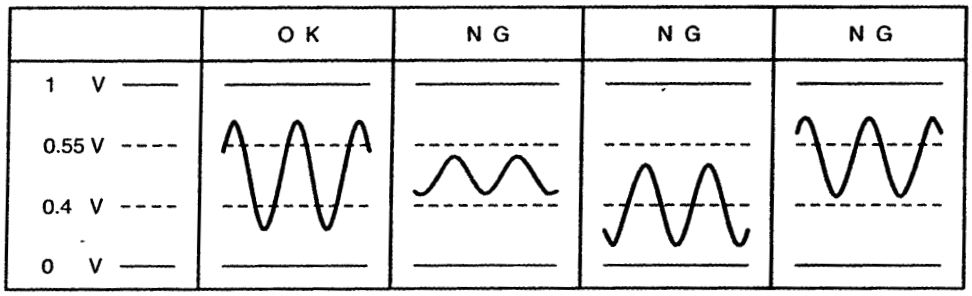

OK	Go to step 9

NG

3	CHECK HARNESS AND CONNECTOR(ECM–OXYGEN SENSOR)

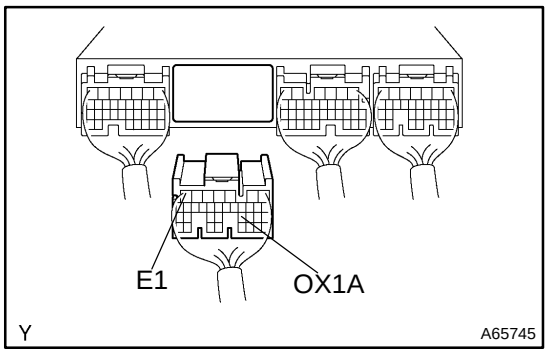

(a) Disconnect the oxygen sensor connector.
(b) Disconnect the ECM E4 connector.
(c) Check continuity between the terminals OX1A of the ECM connector and OX of the oxygen sensor connector.
Resistance: 1 Ω or less

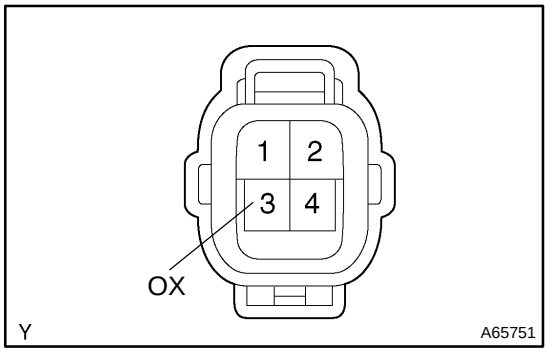

(d) Check for short between the terminals OX1A and E1 of the ECM connector.
Resistance: 1 MΩ or more

NG	REPAIR OR REPLACE HARNESS AND CONNECTOR

OK

4	CHECK WHETHER MISFIRE IS OCCURRED OR NOT BY MONITORING DTC AND DATA LIST (See page 05–157)

NG → CHECK FOR SPARK AND IGNITION

OK

5	CHECK AIR INDUCTION SYSTEM (See page 12–13)

NG → REPAIR OR REPLACE AIR INDUCTION SYSTEM

OK

6	CHECK FUEL PRESSURE (See page 11–5)

NG → REPAIR OR REPLACE FUEL SYSTEM

OK

7	CHECK FUEL INJECTOR ASSY (See page 11–7)

NG → REPLACE FUEL INJECTOR ASSY

OK

8	CHECK EXHAUST GAS LEAK

(a) Clear the DTC.
(b) Warm up the oxygen sensor by a driving test to check the system.
HINT:
Refer to CONFIRMATION DRIVING PATTERN.

NG → REPAIR OR REPLACE EXHAUST GAS LEAKAGE POINT

OK

REPLACE OXYGEN SENSOR

9	PERFORM CONFIRMATION DRIVING PATTERN

(a) Clear the DTC.
(b) Warm up the oxygen sensor by a driving test to check the system.
HINT:
Refer to CONFIRMATION DRIVING PATTERN.

GO

10	READ OUTPUT DTC(BESIDS P0133)

Result:

	A	B
RESULT	P0133 is not output again.	P0133 is not output again.

B → CHECK AND REPLACE ECM

A

11	CONFIRM VEHICLE RUNS OUT OF FUEL IN THE PAST

(a) Confirm if the vehicle ran out of fuel or not in the past.

HINT:

There is no problem, if DTC P0133 is not output after the CONFIRMATION DRIVING PATTERN. This means that the ECM records DTC P0133 because of the running out of fuel in the past.

NO → CHECK FOR INTERMITTENT PROBLEMS

YES

DTC IS CAUSED RUNNING OUT OF FUEL

DTC	P0135	HEATED OXYGEN SENSOR HEATER CIRCUIT MALFUNCTION (BANK 1 SENSOR 1)

DTC	P0141	HEATED OXYGEN SENSOR HEATER CIRCUIT MALFUNCTION (BANK 1 SENSOR 2)

CIRCUIT DESCRIPTION

Refer to DTC P0125 on page 05–196.

DTC No	DTC Detecting Condition	Trouble Area
P0135 P0141	When heater operates, heater current exceeds 2 A (2 trip detection logic)	• Open or short in heater circuit of heated oxygen sensor • Heated oxygen sensor heater • ECM
	Heater current of 0.2 A or less when heater operates (2 trip detection logic)	

HINT:

- Bank 1 refers to the bank that includes cylinder No. 1.
- Sensor 2 refers to the sensor being farther from the engine body.

WIRING DIAGRAM

Refer to DTC P0125 on page 05–196.

INSPECTION PROCEDURE

HINT:

Read freeze frame data using hand–held tester or OBD II scan tool. Because freeze frame records the engine conditions when the malfunction is detected, when troubleshooting it is useful for determining whether the vehicle was running or stopped, the engine warmed up or not, the air–fuel ratio lean or rich, etc. at the time of the malfunction.

1	INSPECT ECM(CHECK VOLTAGE)

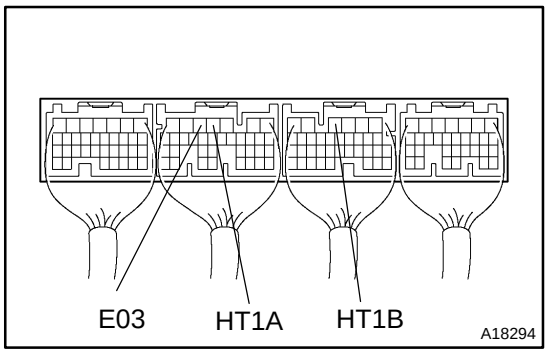

(a) Turn the ignition switch ON.
(b) Measure voltage between the terminals HT1A and E03 of the ECM connector.
Voltage: 9 – 14 V
(c) Measure voltage between the terminals HT1B and E03 of the ECM connector.
Voltage: 9 – 14 V

OK → **CHECK AND REPLACE ECM**

NG

2	CHECK OXYGEN SENSOR(OXYGEN SENSOR HEATER)

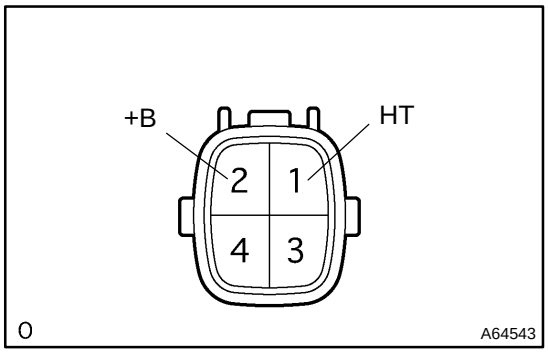

(a) Disconnect the oxygen sensor connector.
(b) Measure resistance between the terminals HT and +B of the oxygen sensor.
Resistance:
Bank1 Sensor1 at 20°C (68°F) 5 – 10 Ω
Bank1 Sensor2 at 20°C (68°F) 11 – 16 Ω

NG → **REPLACE OXYGEN SENSOR**

OK

3	CHECK HARNESS AND CONNECTOR(ECM–OXYGEN SENSOR)

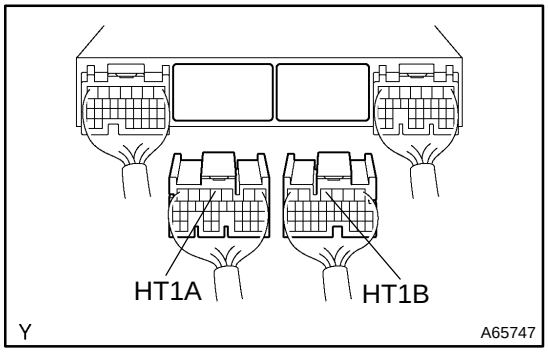

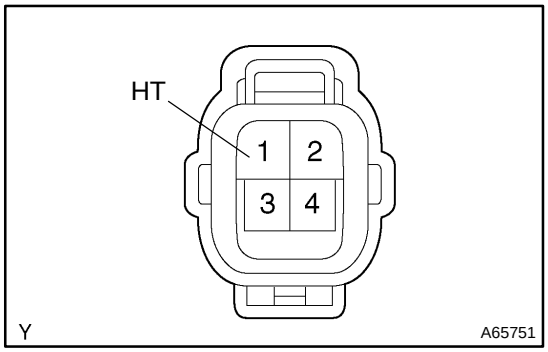

(a) Disconnect the oxygen sensor connector.
(b) Disconnect the ECM E4 and E5 connector.
(c) Check continuity between the terminals HT of the oxygen sensor (Bank 1 sensor 1) and HT1A of the ECM connector.
Resistance: 1 Ω or less
(d) Check for short between the terminals HT1A and E03 of the ECM connector.
Resistance: 1 MΩ or more
(e) Check continuity between the terminals HT of the oxygen sensor (Bank 1 sensor 2) and HT1B of the ECM connector.
Resistance: 1 Ω or less
(f) Check for short between the terminals HT1B and E03 of the ECM connector.
Resistance: 1 MΩ or more

NG → **REPAIR OR REPLACE HARNESS AND CONNECTOR**

OK

4	CHECK CHECK FOR ECM POWER SOURCE CIRCUIT (See page 05–308)

NG → **REPAIR OR REPLACE CHECK FOR ECM POWER SOURCE CIRCUIT**

OK

5	CHECK HARNESS AND CONNECTOR(E.F.I. RELAY–OXYGEN SENSOR)

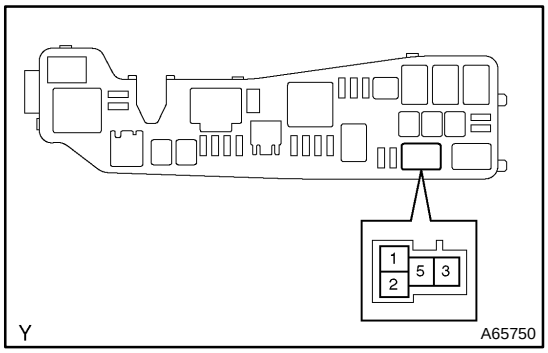

(a) Disconnect the battery negative (–) terminal.
(b) Disconnect the oxygen sensor connector.
(c) Check continuity between the terminals 5 of the E.F.I. relay side connector and +B of the oxygen sensor connector.
Resistance: 1 Ω or less

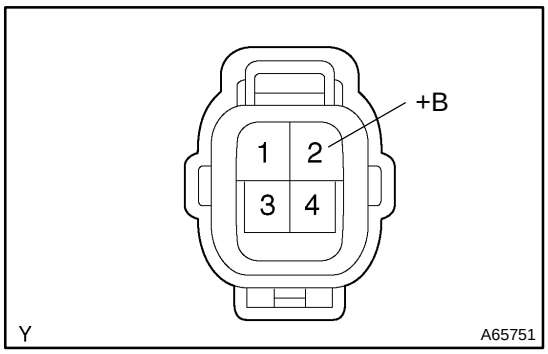

NG → **REPAIR OR REPLACE HARNESS AND CONNECTOR**

OK

CHECK AND REPLACE ECM

DTC	P0136	OXYGEN SENSOR CIRCUIT MALFUNCTION (BANK 1 SENSOR 2)

CIRCUIT DESCRIPTION

Refer to DTC P0125 on page 05–196

DTC No.	DTC Detecting Condition	Trouble Area
P0136	Voltage output of heated oxygen sensor remains at 0.4 V or more, or 0.5 V or less when vehicle is driven at 40 km/h (25 mph) or more after engine is warmed up (2 trip detection logic)	• Open or short in heated oxygen sensor circuit • Heated oxygen sensor

HINT:

- Bank 1 refers to the bank that includes cylinder No.1.
- Sensor 2 refers to the farther seneor from the engine body.

WIRING DIAGRAM

Refer to DTC P0125 on page 05–196

INSPECTION PROCEDURE

HINT:

Read freeze frame data using hand – held tester or OBD II scan tool, as freeze frame data records the engine conditions when a malfunction is detected. When troubleshooting, it is useful for determining whether the vehicle was running or stopped, the engine was warmed up or not, the air–fuel ratio was lean or rich, etc. at the time of the malfunction.

1	READ OUTPUT DTC(BESIDE P0136)

YES → GO TO RELEVANT DTC CHART

ON

2	CHECK HARNESS AND CONNECTOR(ECM–OXYGEN SENSOR)

NG → REPAIR OR REPLACE HARNESS AND CONNECTOR

OK

3	READ VALUE OF HAND–HELD TESTER(OUTPUT VOLTAGE OXYGEN SENSOR)

(a) Connect the hand – held tester or OBD II scan tool to the DLC3.
(b) Warm up the engine to normal operating temperature.
(c) Read the voltage output of the heated oxygen sensor when engine is suddenly raced.

HINT:

Perform a quick racing to 4,000 rpm 3 times using the accelerator pedal.

Heated oxygen sensor output voltage: Alternates from 0.4 V or less to 0.5 V or more.

OK → CHECK THAT EACH CONNECTOR IS PROPERLY CONNECTED

NG

REPLACE SENSOR, OXYGEN

DTC	P0171	SYSTEM TOO LEAN (FUEL TRIM) (BANK 1)

DTC	P0172	SYSTEM TOO RICH (FUEL TRIM) (BANK 1)

CIRCUIT DESCRIPTION

Fuel trim refers to the feedback compensation value compared against the basic injection time. Fuel trim includes short–term fuel trim and long–term fuel trim.
Short–term fuel trim is the short–term fuel compensation used to maintain the air–fuel ratio at its ideal theoretical value. The signal from the heated oxygen sensor indicates whether the air–fuel ratio is RICH or LEAN compared to the ideal theoretical value, triggering a reduction in fuel volume if the air–fuel ratio is rich, and an increase in fuel volume if it is lean.
Long–term fuel trim is overall fuel compensation carried out long–term to compensate for continual deviation of the short–term fuel trim form the central value due to individual engine differences, wear over time and changes in the usage environment.
If both the short–term fuel trim and long–term fuel trim are LEAN or RICH beyond a certain value, it is detected as a malfunction and the check engine warning (CHK ENG) lights up.

DTC No.	DTC Detecting Condition	Trouble Area
P0171	When the air–fuel ratio feedback is stable after engine warming up, the fuel trim is considerably in error on the RICH side (2 trip detection logic)	• PCV hose • Air induction system • Infector blockage • Mass air flow meter • Engine coolant temp. sensor • Fuel pressure • Gas leakage on exhaust system • Open or short in heated oxygen sensor circuit • Heated oxygen sensor • ECM
P0172	When the air–fuel ratio feedback is stable after engine warming up, the fuel trim is considerably in error on the LEAN side. (2 trip detection logic)	• Injector leak, blockage • Mass air flow meter • Engine coolant temp. sensor • Ignition system • Fuel pressure • Gas leakage on exhaust system • Open or short in heated oxygen sensor circuit • Heated oxygen sensor • ECM

HINT:
If the total of the short–term fuel trim value and long–term fuel trim value is within ± 25 %, the system is functioning normally.

WIRING DIAGRAM

Refer to DTC P0125 on page 05–196.

INSPECTION PROCEDURE

HINT:
Read freed frame data using hand–held tester or OBD II scan tool. Because freeze frame records the engine conditions when the malfunction is detected, when troubleshooting it is useful for determining whether the vehicle was running or stopped, the engine warmed up or not, the air–fuel ratio lean or rich, etc. at the time of the malfunction.

1	CHECK AIR INDUCTION SYSTEM (See page 12–13)

NG → REPAIR OR REPLACE AIR INDUCTION SYSTEM

OK

2	CHECK CONNECTION OF PCV HOSE

NG → REPAIR OR REPLACE PCV HOSE

OK

3	CHECK FUEL INJECTOR ASSY (See page 11–7)

NG → REPLACE FUEL INJECTOR ASSY

OK

4	CHECK E.F.I. ENGINE COOLANT TEMPERATURE SENSOR (See page 10–12)

NG → REPAIR OR REPLACE E.F.I. ENGINE COOLANT TEMPERATURE SENSOR

OK

5	CHECK FOR SPARK AND IGNITION (See page 18–4)

NG → REPAIR OR REPLACE IGNITION SYSTEM

OK

6	CHECK FUEL PRESSURE (See page 11–5)

NG → REPAIR OR REPLACE FUEL SYSTEM

OK

7	CHECK EXHAUST GAS LEAKAGE POINT

NG → REPAIR OR REPLACE EXHAUST GAS LEAKAGE POINT

OK

8	READ VALUE OF OBD II SCAN TOOL OR HAND–HELD TESTER(OUTPUT VOLTAGE OF OXYGEN SENSOR)

(a) Warm up the oxygen sensor with the engine speed at 2,500 rpm for approx. 90 sec.
(b) Use the hand–held tester or OBD II scan tool to read the output voltage of the oxygen sensor during idling.

Oxgen sensor otput voltage:
Alternates repeatedly between less than 0.4 V and more than 0.55 V (See the following table)

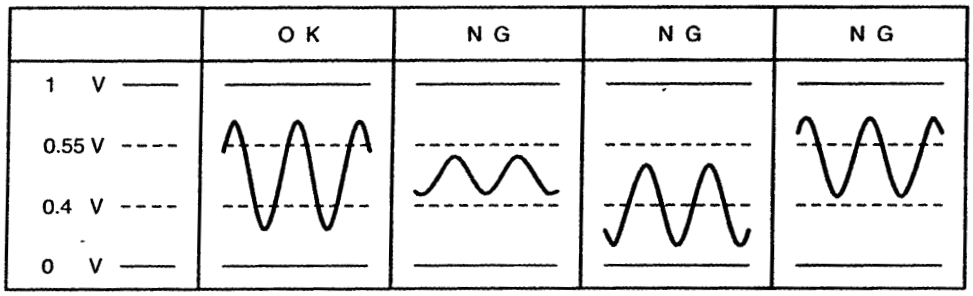

P18349

OK → **Go to step 10**

NG

9	CHECK HARNESS AND CONNECTOR(ECM–OXYGEN SENSOR)

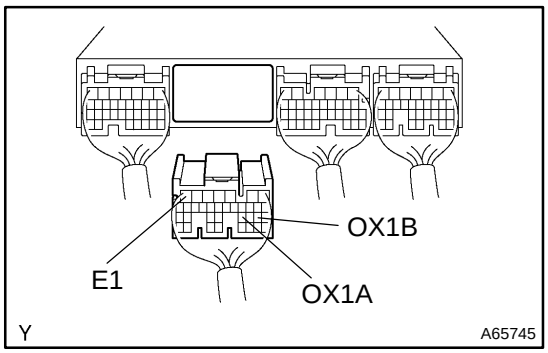

Y A65745

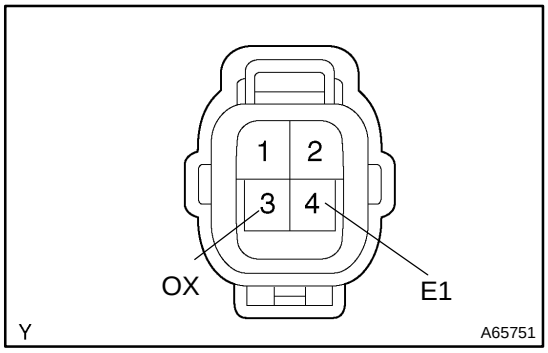

Y A65751

(a) Disconnect the oxygen sensor connector.
(b) Disconnect the ECM E4 connector.
(c) Check continuity between the terminals OX1A of the ECM connector and OX of the oxygen sensor connector.
Resistance: 1 Ω or less
(d) Check continuity between the terminals E1 of the ECM connector and the E1 of the oxygen sensor connector.
Resistance: 1 Ω or less
(e) Check for short between the terminals OX1A and E1 of the ECM connector.
Resistance: 1 MΩ or more
(f) Check continuity between the terminals OX1B of the ECM connector and OX of the oxygen sensor connector.
Resistance: 1 Ω or less
(g) Check continuity between the terminals E1 of the ECM connector and the E1 of the oxygen sensor connector.
Resistance: 1 Ω or less
(h) Check for short between the terminals OX1B and E1 of the ECM connector.
Resistance: 1 MΩ or more

NG → **REPAIR OR REPLACE HARNESS AND CONNECTOR**

OK

REPLACE OXYGEN SENSOR

10 PERFORM CONFIRMATION DRIVING PATTERN

GO

11 READ OUTPUT DTC(BESIDES P0171 OR P0172)

Result:

	A	B
RESULT	P0171 and P0172 are not output.	P0171 and P0172 are output again.

B → **CHECK AND REPLACE ECM**

A

12 CONFIRM VEHICLE RUNS OUT OF FUEL IN THE PAST

NO → **CHECK FOR INTERMITTENT PROBLEMS**

YES

DTC P0171 IS CAUSED BY RUNNING OUT OF FUEL

DTC	P0300	RANDOM/MULTIPLE CYLINDER MISFIRE DETECTED

DTC	P0301	CYLINDER 1 MISFIRE DETECTED

DTC	P0302	CYLINDER 2 MISFIRE DETECTED

DTC	P0303	CYLINDER 3 MISFIRE DETECTED

DTC	P0304	CYLINDER 4 MISFIRE DETECTED

CIRCUIT DESCRIPTION

Misfire: The ECM uses the crankshaft position sensor and camshaft position sensor to monitor changes in the crankshaft rotation for each cylinder.
The ECM counts the number of times the engine speed change rate, indicating that misfire has occurred. And when the misfire rate equals to or exceeds the count indicating that the engine condition has deteriorated, the MIL lights up.
If the misfire rate is high enough and the driving conditions will cause catalyst to overheating, the MIL blinks when misfire occurs.

DTC No.	DTC Detecting Condition	Trouble Area
P0300	Misfire of random cylinders is detected during any particular 200 or 1,000 revolutions	• Open or short in engine wire • Connector connection • Vacuum hose connection • PCV hose • Ignition system • Injector • Fuel pressure • Mass air flow meter • Engine coolant temp. sensor • Compression pressure • Valve clearance • Valve timing • VVTL system • ECM
P0301 P0302 P0303 P0304	For any particular 200 revolutions for engine, misfiring is detected which can cause catalyst overheating (This causes MIL to blink)	
	For any particular 1,000 revolutions of engine, misfiring is detected which causes a deterioration in emissions (2 trip detection logic)	

HINT:
When the 2 or more codes for a misfiring cylinder are recorded repeatedly but no random misfire code is recorded, it indicates that the misfires were detected and recorded at different times.

WIRING DIAGRAM

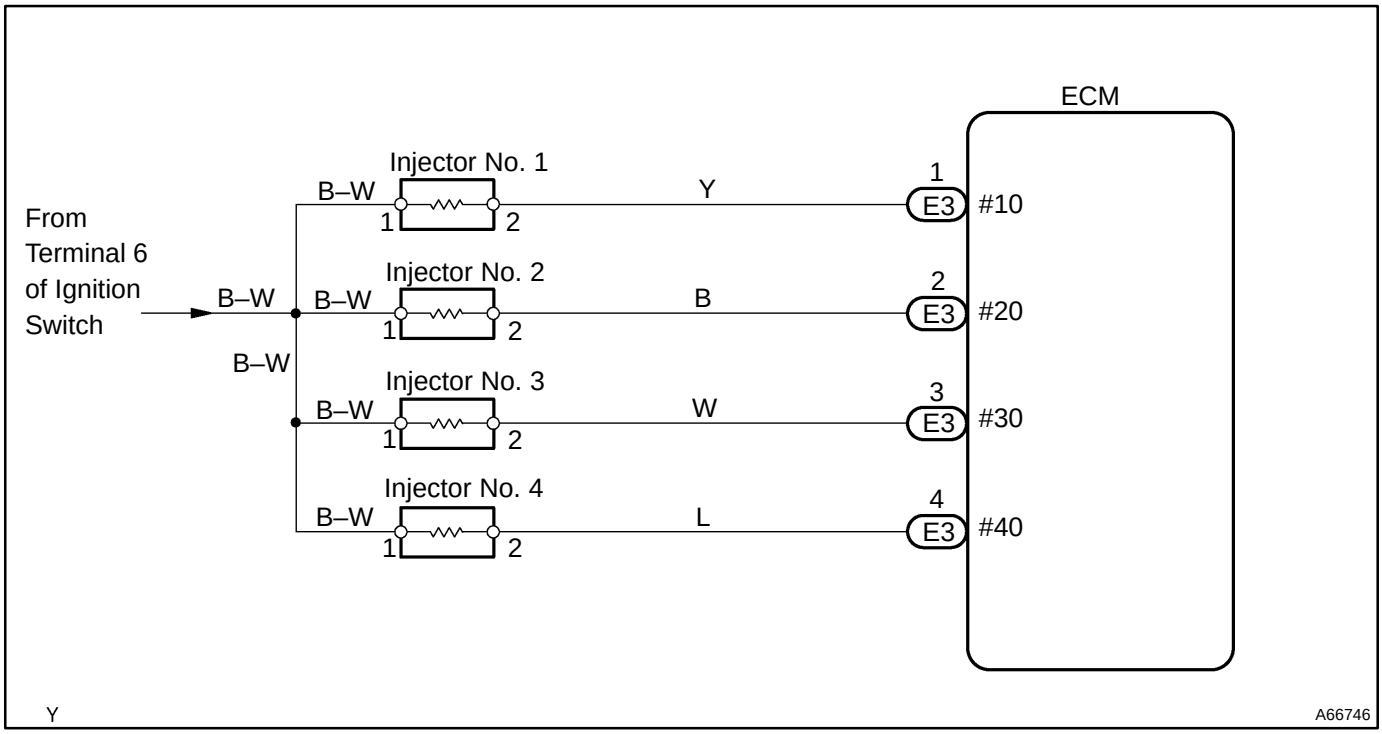

CONFIRMATION DRIVING PATTERN

(a) Connect the hand–held tester or OBD II scan tool to the DLC3.
(b) Record the DTC and freeze frame data.
(c) Use the hand–held tester to set to the check mode (See page 05–157).
(d) Drive the vehicle several times with the engine speed, load and its surrounding range shown with ENGINE SPD, CALC LOAD in the freeze frame data or MISFIRE RPM, MISFIRE LOAD in the data list. If you have no hand–held tester, turn the ignition switch OFF after the symptom is simulated once. Then repeat the simulation process again.

HINT:
In order to memorize the DTC of the misfire, it is necessary to drive around MISFIRE RPM, MISFIRE LOAD in the following data list.

Engine Speed	Time
Idling	3 minutes and 30 seconds or more
1000 rpm	3 minutes or more
2000 rpm	1 minutes 30 seconds or more
3000 rpm	1 minute or more

(e) Check whether there is misfire or not by monitoring the DTC and the freeze frame data, and then, record them.
(f) Turn the ignition switch OFF and wait at least 5 seconds.

INSPECTION PROCEDURE

HINT:

- If the other DTCs besides misfire are memorized simultaneously, first perform the troubleshooting for them.
- Read freeze frame data using the hand–held tester, as freeze frame data records the engine conditions when the malfunction is detected. When troubleshooting, it is useful for determining whether the vehicle was running or stopped, the engine was warmed up or not, the air–fuel ratio was lean or rich, etc. at the time of the malfunction.
- If the misfire is not occurred when the vehicle is brought to the workshop, it can be confirmed by reproducing the condition of the freeze frame data. After finishing the repair, confirm that there is no misfire (See the confirmation driving pattern).
- When either of SHORT FT #1, LONG FT #1, SHORT FT #2 or LONG FT #2 in the freeze frame data is over the range of ±20%, there is a possibility that the air–fuel ratio is inclining either to ”RICH” (–20% or less) or ”LEAN” (+20% or more).
- When COOLANT TEMP in the freeze frame data is less than 80˚C (176˚F), there is a possibility of misfire only during warming up.
- In case that the misfire cannot be reproduced, this may be because of the driving with the shortage of fuel, the use of improper fuel, a stain of ignition plug and etc.

1	CHECK WIRE HARNESS, CONNECTOR AND VACUUM HOSE IN ENGINE ROOM

(a) Check the connection conditions of the wire harness and connector.
(b) Check the disconnection, piping and break in the vacuum hose.

NG → REPAIR OR REPLACE, THEM CONFIRM THAT THERE IS NO MISFIRE

OK

2	CHECK CONNECTION OF PCV HOSE

NG → REPAIR OR REPLACE PCV HOSE

OK

3	INSPECT SPARK PLUG

NG → REPAIR OR REPLACE IGNITION SYSTEM

OK

4	INSPECT ECM(CHECK VOLTAGE)

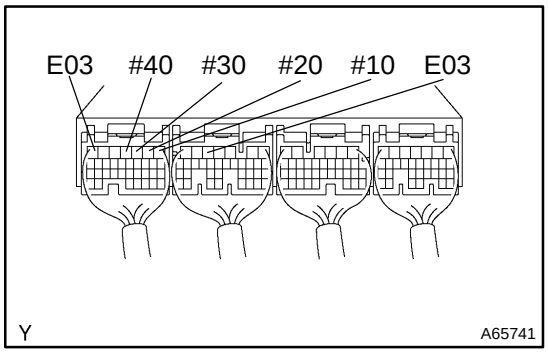

(a) Turn the ignition switch ON.
(b) Measure the voltage between applicable terminal and E03 of the ECM connector.
Voltage: 9 – 14 V
(c) Reference:
Inspection using oscilloscope injector signal waveform.
(1) With the engine idling, check the waveforms between terminals #10 – #40 and E01 of the ECM connector.

HINT:
The correct waveforms are shown below.

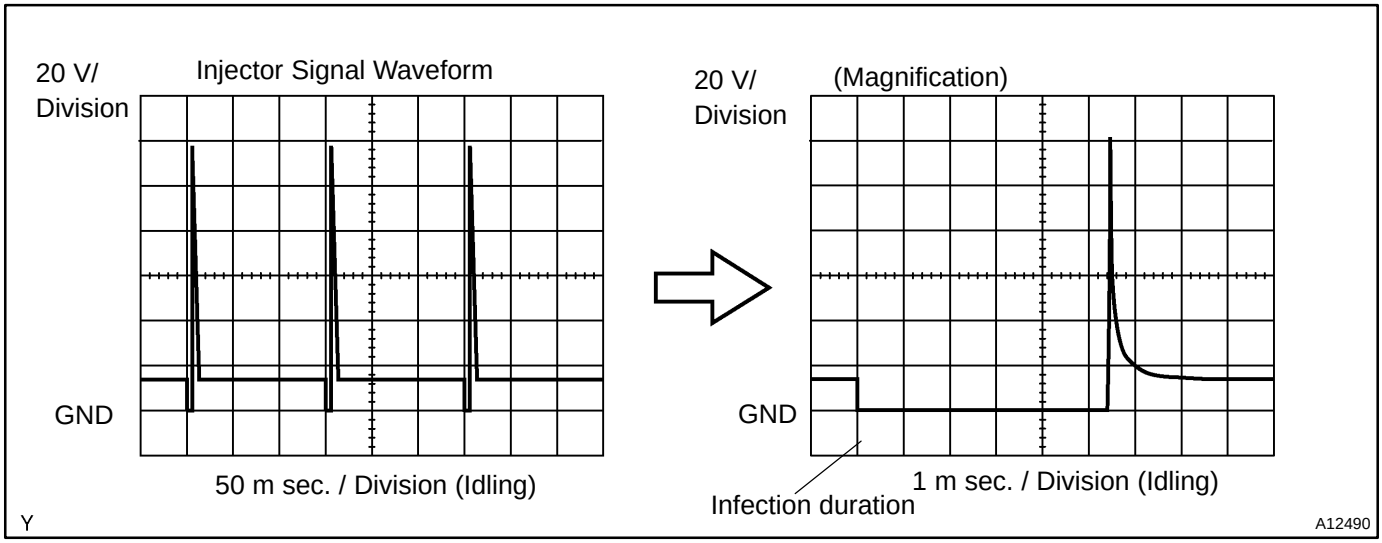

OK → **Go to step 6**

NG

5	INSPECT FUEL INJECTOR ASSY (See page 11–7)

NG → **REPLACE FUEL INJECTOR ASSY**

OK

CHECK WIRE HARNESS OR CONNECTOR

6	CHECK FUEL PRESSURE (See page 11–5)

NG → **REPAIR OR REPLACE FUEL PUMP, FUEL PIPE LINE AND FILTER**

OK

7	INSPECT FUEL INJECTOR ASSY (See page 11–7)

NG → REPLACE FUEL INJECTOR ASSY

OK

8	INSPECT INTAKE AIR FLOW METER SUB–ASSY (See page 10–12)

NG → REPAIR OR REPLACE INTAKE AIR FLOW METER SUB–ASSY

OK

9	INSPECT E.F.I. ENGINE COOLANT TEMPERATURE SENSOR (See page 10–12)

NG → REPLACE E.F.I. ENGINE COOLANT TEMPERATURE SENSOR

OK

CHECK COMPRESSION PRESSURE,VVTL SYSTEM,VALVE CLEARANCE AND VALVE TIMING

DTC	P0325	KNOCK SENSOR 1 CIRCUIT MALFUNCTION (BANK 1)

CIRCUIT DESCRIPTION

The knock sensor is fitted to the cylinder block to detect the engine knocking. This sensor contains a piezo-electric element which generates a voltage when it becomes deformed. This occurs when the cylinder block vibrates due to knocking. If the engine knocking occurs, the ignition timing is delayed to suppress it.

DTC No.	DTC Detecting Condition	Trouble Area
P0325	No knock sensor signal to ECM with engine speed, 2,000 rpm or more	• Open or short in knock sensor circuit • Knock sensor (looseness) • ECM

HINT:

If the ECM detects above diagnosis conditions, it operates the fail safe function in which the corrective retard angle value is set to the maximum value.

WIRING DIAGRAM

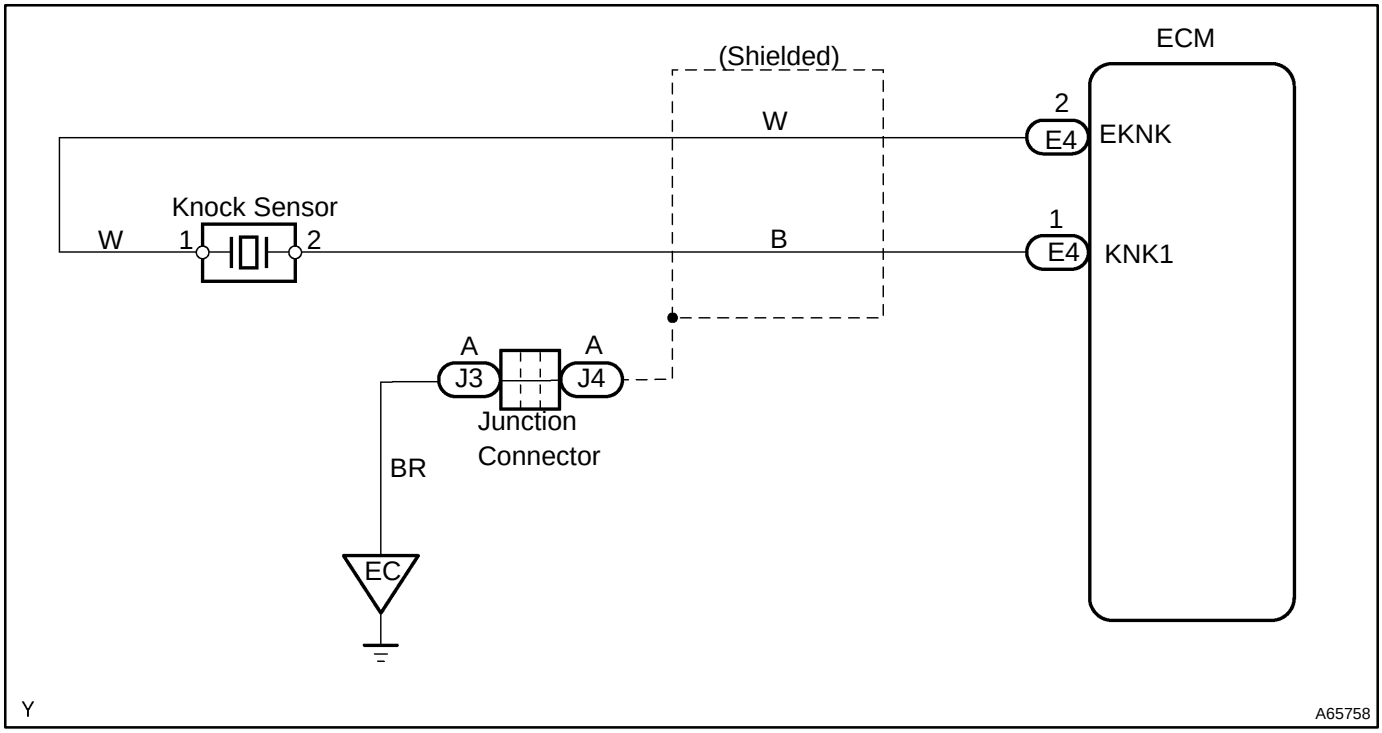

INSPECTION PROCEDURE

HINT:

Read freed frame data using hand–held tester OBD II scan tool. Because freeze frame records the engine conditions when the malfunction is detected, when troubleshooting it is useful for determining whether the vehicle was running or stopped, the engine warmed up or not, the air–fuel ratio lean or rich, etc. at the time of the malfunction.

1	CHECK HARNESS AND CONNECTOR

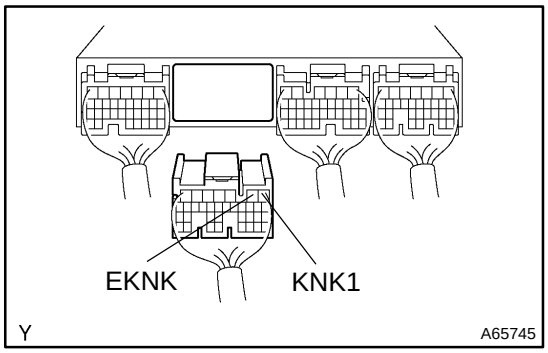

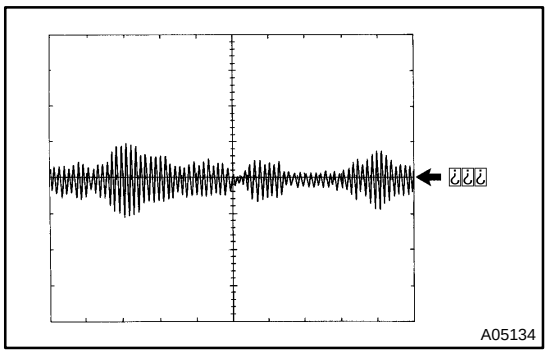

(a) Check for short on the wire harness between the ECM and the knock control sensor.
  (1) Disconnect the ECM E4 connector.
  (2) Check for short between the terminals KNK1 of ECM connector and EKNK of ECM connector.
  Resistance: 1 MΩ or more

(b) Reference:
Inspection using the oscilloscope.
  (1) With the engine racing at 4,000 rpm, check the waveform between terminal KNK1 of the ECM connector and the body ground.

HINT:
The correct waveforms are as shown in the left.
  (2) Spread the time on the horizontal axis, and confirm that period of the wave is 80 μ seconds (Normal mode vibration frequency of knock sensor: 11.7 kHz).

OK → **Go to step 3**

NG

2	INSPECT KNOCK CONTROL SENSOR (See page 10–12)

NG → **REPLACE KNOCK CONTROL SENSOR**

OK

3	CHECK HARNESS AND CONNECTOR(ECM–KNOCK CONTROL SENSOR)

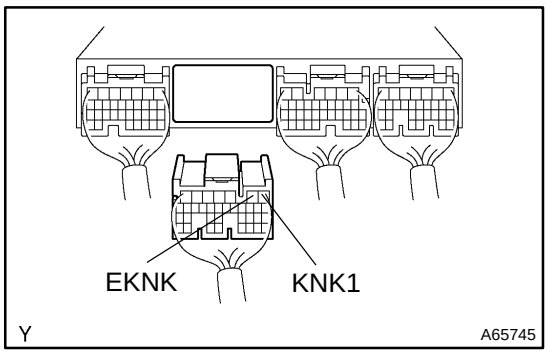

(a) Disconnect the knock control sensor connector.
(b) Disconnect the ECM E4 connector.
(c) Check continuity between the terminals KNK1 of the ECM connector and KNK1 of the knock control sensor.
  Resistance: 1 Ω or less
(d) Check for short between the terminals KNK1 and EKNK of the ECM connector.
  Resistance: 1 MΩ or more

NG → **REPAIR OR REPLACE HARNESS AND CONNECTOR**

OK

4	CONFIRM THE MALFUNCTION DISAPPEAR WHEN A GOOD KNOCK SENSOR IS INSTALLED

SST 09816–30010

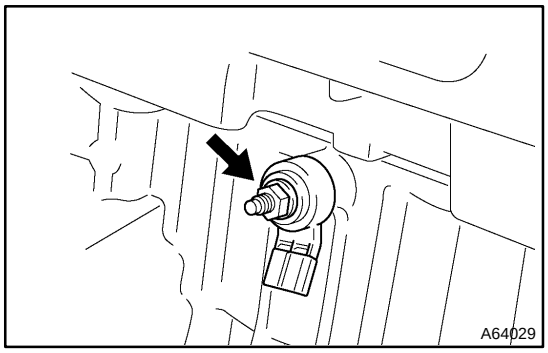

(a) Change the knock sensor to a new one
  (1) Remove the knock control sensor.
  (2) Install the knock control sensor.
  Torque: 20 N·m (204 kgf·cm, 15 ft·lbf)
(b) Perform the driving test.
(c) Read DTC.

Result:

	A	B
RESULT	P0325 is output	P0325 is not output

B → **REPLACE KNOCK CONTROL SENSOR**

A

CHECK AND REPLACE ECM

DTC	P0335	CRANKSHAFT POSITION SENSOR ”A” CIRCUIT MALFUNCTION

CIRCUIT DESCRIPTION

Crankshaft position sensor (NE signal) consists of a magnet, iron core and pick up coil.
The NE signal plate (crank angle sensor plate) has 34 teeth and is mounted on the crankshaft. The NE signal sensor generates 34 signals at every engine revolution. The ECM detects the standard crankshaft angle based on the G signal, the actual crankshaft angle and the engine speed by the NE signal.

DTC No.	DTC Detecting Condition	Trouble Area
P0335	No crankshaft position sensor signal to ECM during cranking (2 trip detection logic)	• Open or short in crankshaft position sensor circuit • Crankshaft position sensor • Crank angle sensor plate • ECM
	No crankshaft position sensor signal to ECM with engine speed 600 rpm or more (2 trip detection logic)	

WIRING DIAGRAM

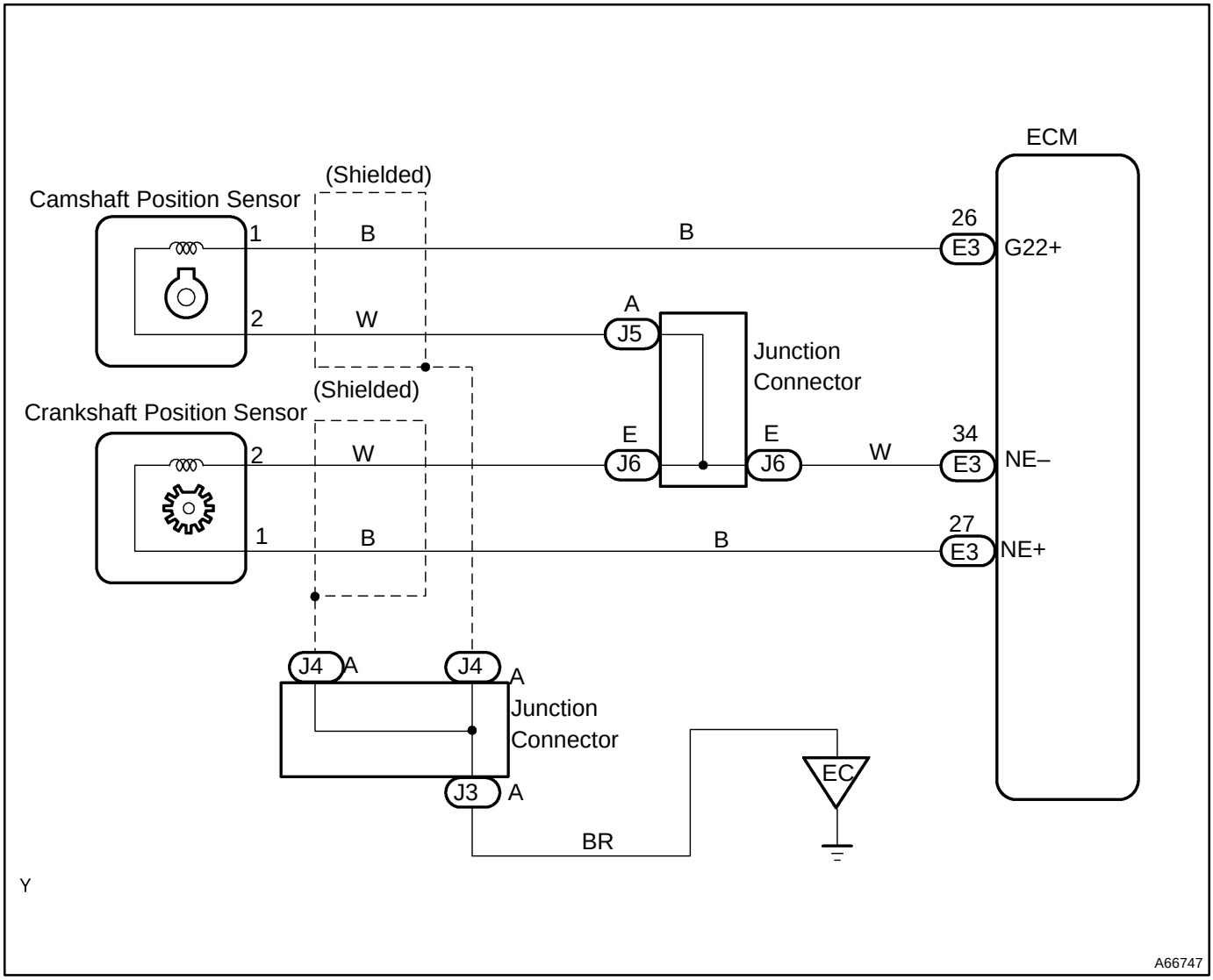

INSPECTION PROCEDURE

HINT:

- Read freed frame data using hand–held tester or OBD II scan tool. Because freeze frame records the engine conditions when the malfunction is detected, when troubleshooting it is useful for determining whether the vehicle was running or stopped, the engine warmed up or not, the air–fuel ratio lean or rich, etc. at the time of the malfunction.
- Perform troubleshooting of DTC P0335 first. If no trouble is found, troubleshoot the following mechanical system.

1	INSPECT CRANK POSITION SENSOR

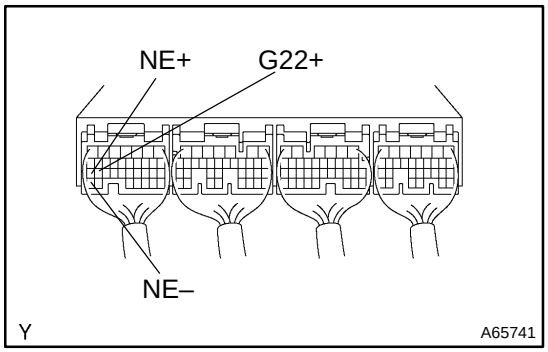

(a) Check the crankshaft position sensor for resistance.
Resistance:
985 – 1600 Ω (Cold)
1265 – 1890 Ω (Hot)

HINT:
”Cold” and ”Hot” above express the temperature of the part itself. ”Cold” is from –10°C (14°F) to 50°C (122°F) and ”Hot” is from 50°C (122°F) to 100°C (212°F).

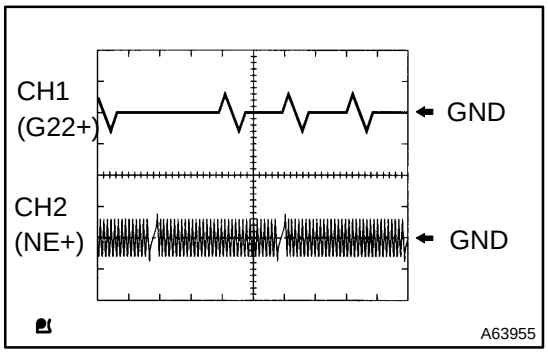

(b) Reference:
Inspection using the oscilloscope.
(1) During cranking or idling, check the wave form between terminals G22+ and NE–, and NE+ and NE– of the ECM connector.

HINT:
The correct wave forms are as shown in the left.

NG → **REPLACE CRANK POSITION SENSOR**

OK

2	CHECK HARNESS AND CONNECTOR(ECM–CRANKSHAFT POSITION SENSOR)

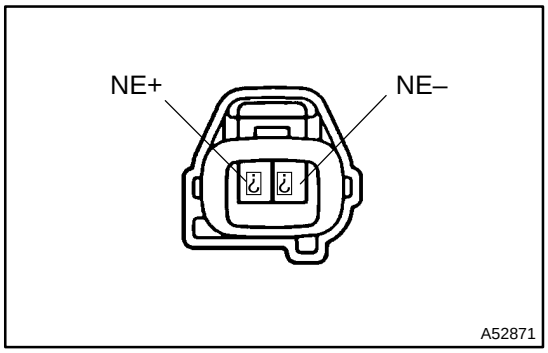

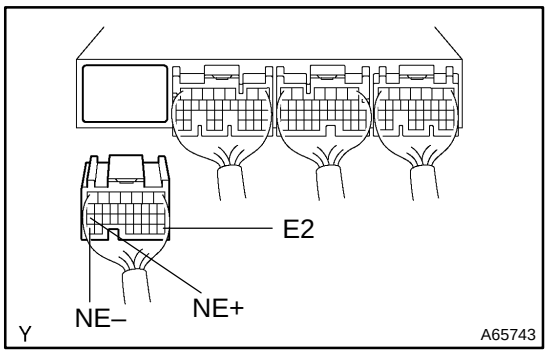

(a) Disconnect the crank position sensor connector.
(b) Disconnect the ECM E3 connector.
(c) Check continuity between the terminals NE+ of the crank position sensor connector and NE+ of the ECM connector.
Resistance: 1 Ω or less
(d) Check for short between the terminals NE+ and E2 of the ECM connector.
Resistance: 1 MΩ or more
(e) Check continuity between the terminals NE– of the crank position sensor connector and NE– of the ECM connector.
Resistance: 1 Ω or less
(f) Check for short between the terminals NE– and E2 of the ECM connector.
Resistance: 1 MΩ or more

NG → **REPAIR OR REPLACE HARNESS AND CONNECTOR**

OK

3	INSPECT SENSOR ATTACHMENT PART

(a) Check the crank position sensor installation .

NG → **REPAIR OR REPLACE SENSOR ATTACHMENT PART**

OK

4	INSPECT CRANKSHAFT POSITION SENSOR PLATE NO.1(TEETH OF SIGNAL PLATE)

(a) Remove the crank angle sensor plate.
(b) Check the teeth of the signal plate.

NG → **REPAIR OR REPLACE CRANKSHAFT POSITION SENSOR PLATE NO.1**

OK

CHECK AND REPLACE ECM

DTC	P0340	CAMSHAFT POSITION SENSOR CIRCUIT MALFUNCTION

CIRCUIT DESCRIPTION

Camshaft position sensor (G signal) consists of a magnet, iron core and pickup coil.
The G signal rotor has 3 teeth on the outside and is mounted on the intake camshaft.
When the camshafts rotate, the protrusion on the signal plate and the air gap on the pickup coil changes, causing fluctuations in the magnetic field and generating an electromotive force in the pickup coil.
The NE signal plate (crank angle sensor plate) has 34 teeth and is installed in the crankshaft. The NE signal sensor generates 34 signals at every engine revolution. The ECM detects the standard crankshaft angle based on the G signals, the actual crankshaft angle and the engine speed by the NE signals.

DTC No.	DTC Detecting Condition	Trouble Area
P0340	No camshaft position sensor signal to ECM during cranking (2 trip detection logic)	• Open or short in camshaft position sensor circuit • Camshaft position sensor • Intake camshaft • ECM
	No camshaft position sensor signal to ECM with engine speed 600 rpm or more	

WIRING DIAGRAM

Refer to DTC P0335 on page 05–228.

INSPECTION PROCEDURE

HINT:
Read freed frame data using hand–held tester or OBD II scan tool. Because freeze frame records the engine conditions when the malfunction is detected, when troubleshooting it is useful for determining whether the vehicle was running or stopped, the engine warmed up or not, the air–fuel ratio lean or rich, etc. at the time of the malfunction.

1	INSPECT CRANK POSITION SENSOR NO.1(CHECK RESISTANCE)

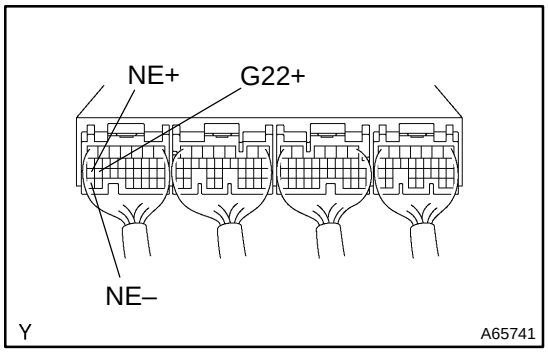

(a) Check the camshaft position sensor for resistance. (See page 18–5)
Resistance:
1630 – 2740 Ω (Cold)
2065 – 3225 Ω (Hot)

HINT:
”Cold” and ”Hot” above express the temperature of the part itself. ”Cold” is from –10°C (14°F) to 50°C (122°F) and ”Hot” is from 50°C (122°F) to 100°C (212°F).

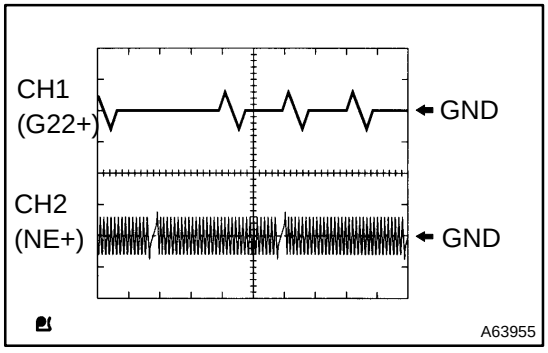

(b) Reference:
Inspection using the oscilloscope.
(1) During cranking or idling, check the waveform between terminals G22+ and NE–, and NE+ and NE– of the ECM connector.

HINT:
The correct waveforms are as shown in the left.

NG → **REPLACE CRANK POSITION SENSOR NO.1**

OK

2	CHECK HARNESS AND CONNECTOR(ECM–CAMSHAFT POSITION SENSOR)

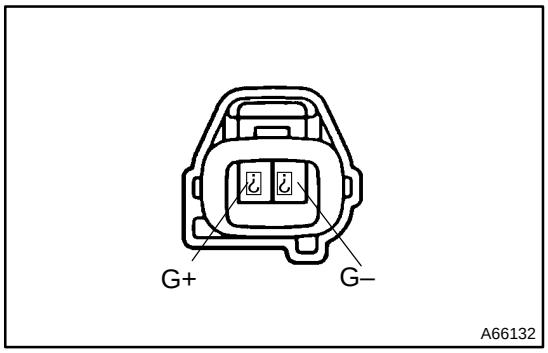

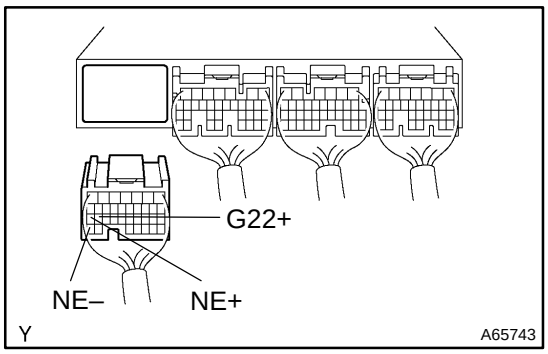

(a) Disconnect the cam position sensor connector.
(b) Disconnect the ECM E3 connector.
(c) Check continuity between the terminals G+ of the camshaft position sensor connector and G22+ of the the ECM connector.
Resistance: 1 Ω or less
(d) Check for short between the terminals G+ of the camshaft position sensor connector and E2 of the the ECM connector.
Resistance: 1 MΩ or more
(e) Check continuity between the terminals G– of the camshaft position sensor connector and the NE– of the the ECM connector.
Resistance: 1 Ω or less
(f) Check for short between the terminals NE– and E2 of the the ECM connector.
Resistance: 1 MΩ or more

NG → **REPAIR OR REPLACE HARNESS AND CONNECTOR**

OK

3	INSPECT SENSOR INSTALLATION

(a) Inspect the camshaft position sensor installation.

NG → **TIGHTEN SENSOR**

OK

4	INSPECT CAMSHAFT

(a) Remove the camshafts.
(b) Check the camshaft lobes.

NG → **REPAIR OR REPLACE CAMSHAFT**

OK

CHECK AND REPLACE ECM

DTC	P0420	CATALYST SYSTEM EFFCIENCY BELOW THRESHOLD (BANK 1)

CIRCUIT DESCRIPTION

The ECM compares the waveform of the oxygen sensor located in front of the catalyst with the waveform of the heated oxygen sensor located behind the catalyst to determine whether or not the catalyst performance has deteriorated.

Air–fuel ratio feedback compensation keeps the waveform of the oxygen sensor in front of the catalyst repeatedly changing back and forth, from rich to lean.

If the catalyst is functioning normally, the waveform of the heated oxygen sensor behind the catalyst switches back and forth between rich and lean much more slowly than the waveform of the oxygen sensor in front of the catalyst.

But when both waveforms change at a similar rate, it is indicated that the catalyst performance has deteriorated.

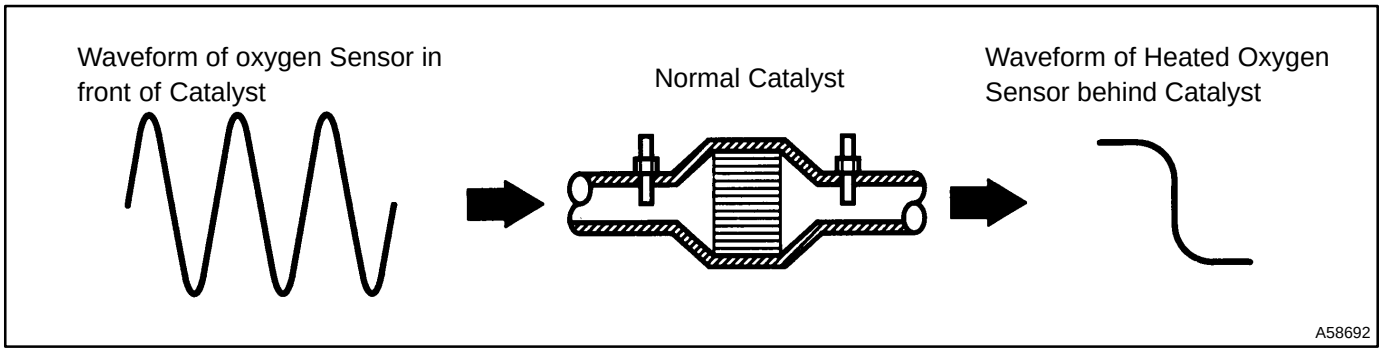

DTC No.	DTC Detecting Condition	Trouble Area
P0420	After engine and catalyst are warmed up, and while vehicle is driven within set vehicle and engine speed range, waveforms of oxygen sensors have same amplitude (2 trip detection logic)	• Gas leakage on exhaust system • Oxygen sensor • Heated oxygen sensor • Three–way catalytic converter

CONFIRMATION DRIVING PATTERN

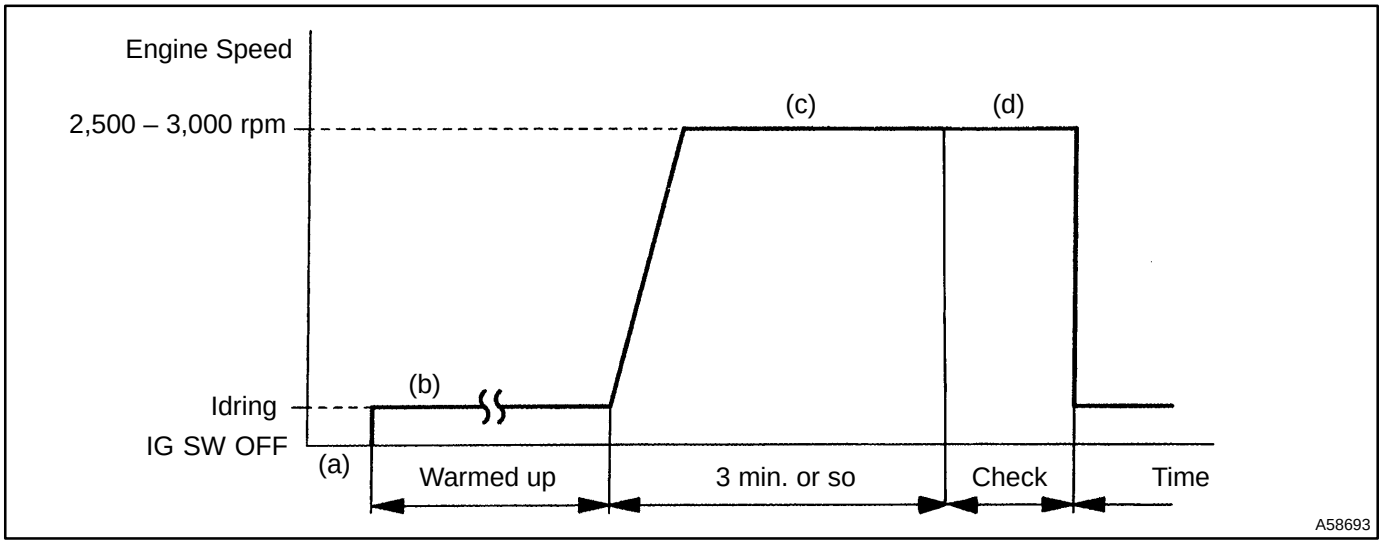

(a) Connect the hand–held tester or OBD II scan tool to the DLC3, or connect the probe of the oscilloscope between terminals HAF1A, HAF2A, OX1B, OX2B and E1 of the ECM connector.
(b) Start the engine and warm it up with all the accessories switched OFF until the water temperature is stable.
(c) Race the engine at 2,500 – 3,000 rpm for about 3 min.
(d) After confirming that the waveforms of the oxygen sensor (bank 1 sensor 1 (OX)) which oscillates around 0.5 V during feedback to the ECM, check the waveform of the heated oxygen sensor (bank 1 sensor 2 (OX2)).

HINT:

- If there is a malfunction in the system, the waveform of the heated oxygen sensor (bank 1 sensor 2 (OX2)) is almost the same as that of the oxygen sensor (bank 1 sensor 1 (OX)) on the left.
- There are some cases that, the MIL may either light up or not light up even though a malfunction exists.

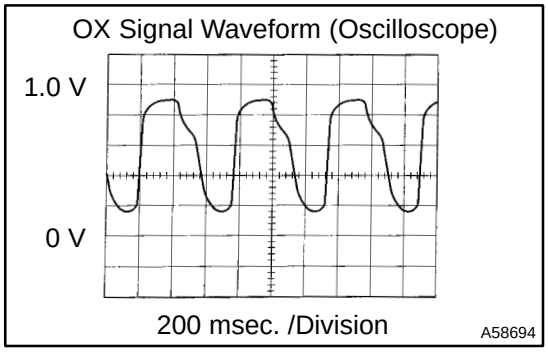

INSPECTION PROCEDURE

HINT:

Read freeze frame data using the hand–held tester or OBD II scan tool, as freeze frame data records the engine conditions when the malfunction is detected. When troubleshooting, it is useful for determining whether the vehicle was running or stopped, the engine was warmed up or not, the air–fuel ratio was lean or rich, etc. at the time of the malfunction.

1	READ OUTPUT DTC(BESIDES P0420)

(a) Read the DTCs with the hand–held tester or OBD II scan tool.
Result:

	A	B
RESULT	P0420 is output	P0420 and other codes are output

B → GO TO RELEVANT DTC CHART

A

2	CHECK EXHAUST GAS LEAK

NG → REPAIR OR REPLACE

OK

3	CHECK OXYGEN SENSOR(BANK 1 SENSOR 1) (See page 05–203)

NG → REPAIR OR REPLACE OXYGEN SENSOR

OK

4	CHECK OXYGEN NO.2 SENSOR(BANK 1 SENSOR 2) (See page 05–203)

NG → REPAIR OR REPLACE OXYGEN NO.2 SENSOR

OK

REPLACE EXHAUST PIPE ASSY FRONT

DTC	P0440	EVAPORATIVE EMISSION CONTROL SYSTEM MALFUNCTION

DTC	P0442	EVAPORATIVE EMISSION CONTROL SYSTEM MALFUNCTION

CIRCUIT DESCRIPTION

The vapor pressure sensor, VSV for Canister Closed Valve (CCV) and VSV for pressure switching valve are used to detect abnormalities in the evaporative emission control system.

The ECM decides whether or not there is an abnormality in the evaporative emission control system by the vapor pressure sensor signal.

DTC P0440 or P0442 is recorded by the ECM when evaporative emissions leak from the components within the dotted line in Fig. 1 below, or when the vapor pressure sensor malfunctions.

Fig. 1

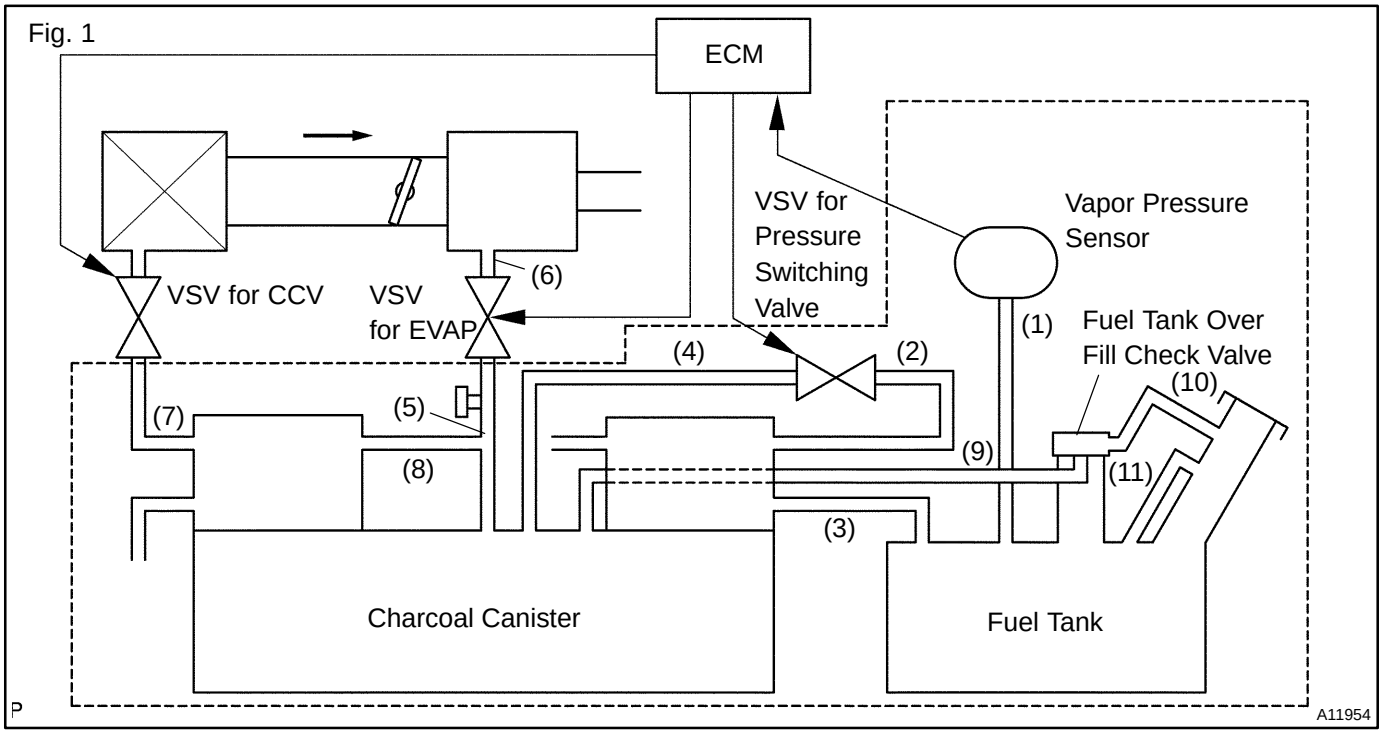

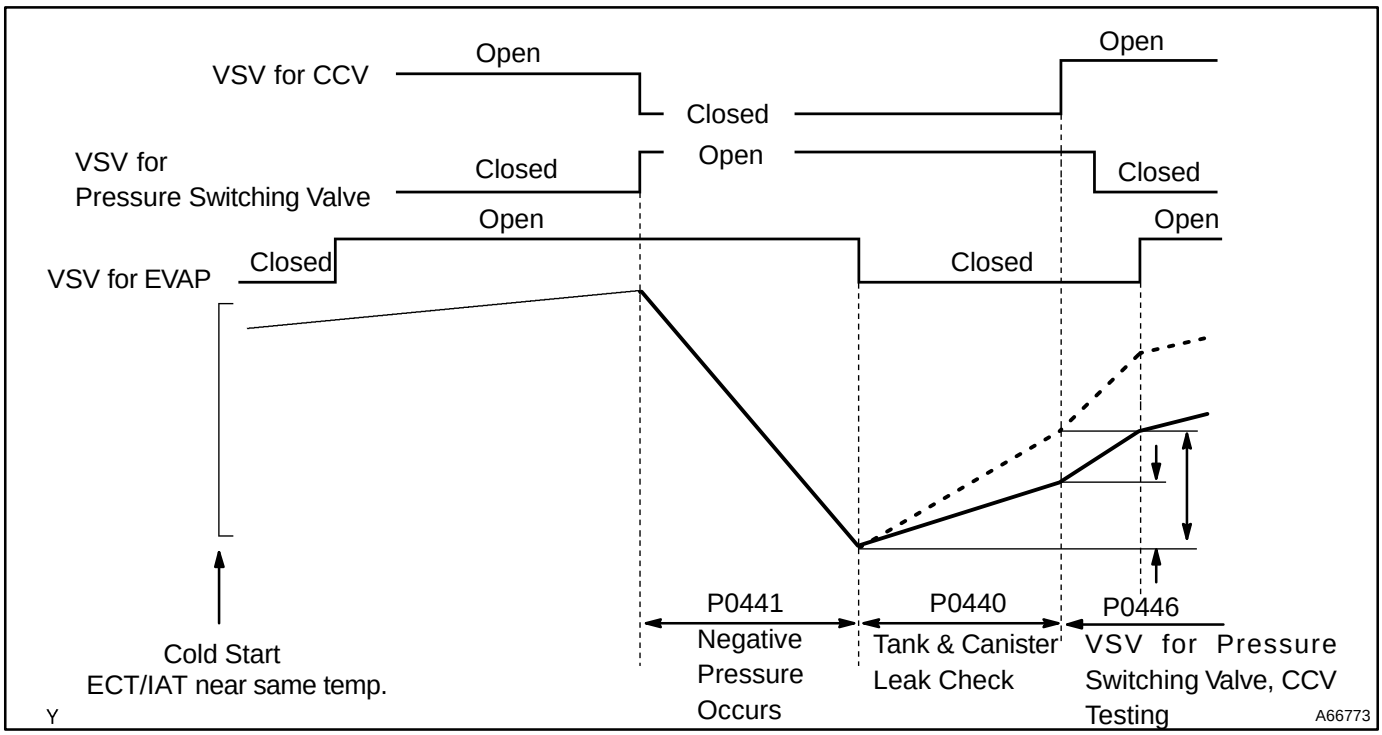

After purge operation, the VSV for EVAP is turned off sealing the vacuum in the system and the ECM begins to monitor the pressure increase. Some increase in normal. A very rapid, sharp increase in pressure indicates a leak in the EVAP system and sets the DTC P0440.
A pressure rise just above normal indecates a very small hole and will set the DTC P0442.

DTC No.	DTC Detecting Condition	Trouble Area
P0440 P0442	Fuel tank pressure is atmospheric pressure after vehicle is driven for 20 min. (2 trip detection logic)	• Hose or tube cracked, holed, damaged or loose seal ((3), (5), (7), (8), (9), (10) and (11) in Fig. 1) • Fuel tank cap incorrectly installed • Fuel tank cap cracked or damaged • Vacuum hose cracked, holed, blocked, damaged or disconnected ((1), (2) or (3) in Fig. 1) • Fuel tank cracked, holed or damaged • Charcoal canister cracked, holed or damaged • Open or short in vapor pressure sensor circuit • VSV for CCV • VSV for EVAP • VSV for Pressure Switching Valve • Vapor pressure sensor • Fuel tank over fill check valve cracked or damaged • ECM

WIRING DIAGRAM

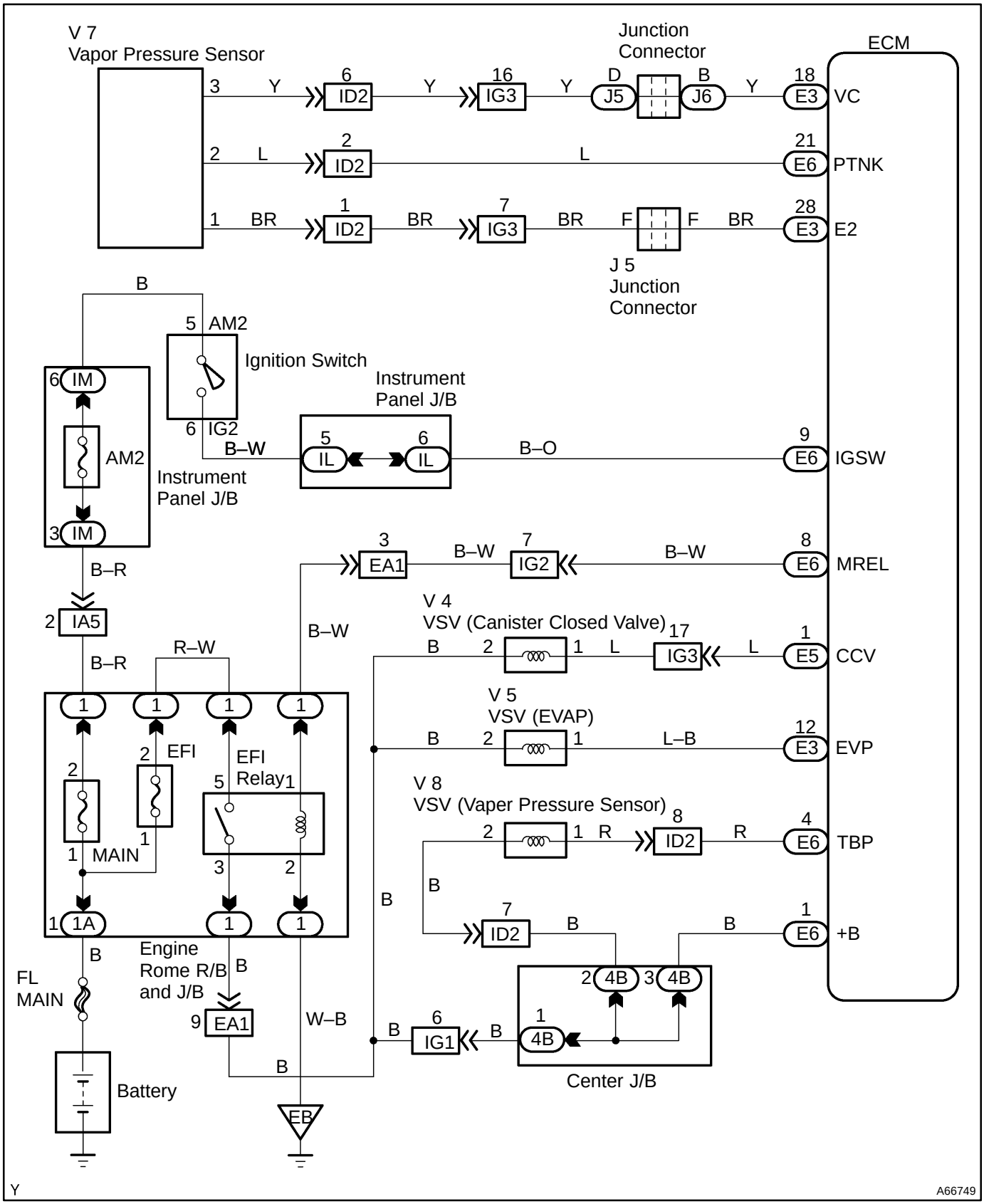

CONFIRMATION READINESS TEST

1. First Trip Procedure

(a) Vehicle must be cold, ambient temperature approximately between 50˚F – 95˚F.

(b) Intake Air Temp. (IAT) and Engine Coolant Temp. (ECT) sensor almost same value.

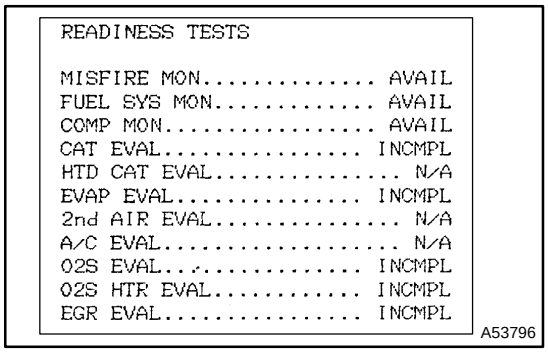

(c) Clear DTC's.

- Disconnect the battery terminal or E.F.I. and ECTS fuses.
- Readiness tests will show INCMPL (incomplete).

(d) Drive the vehicle according to LA#4 drive cycle. Note the state of Readiness Tests. They will change to COMPL as the evaluation monitors operate and if the system passes. This procedure may take approximately 20 min. or more.

NOTICE:

Do not shut off the engine – the results will be invalid.

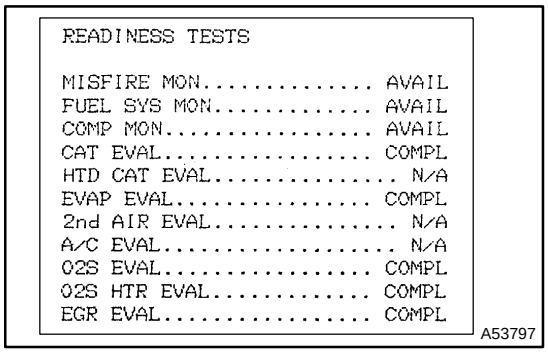

2. Pass Condition – No Problem Found by the ECM

If the EVAP evaluation monitor shows COMPL, go to the Non–Continuous Test screen.

NOTICE:

Do not shut off the engine – the results will be invalid.

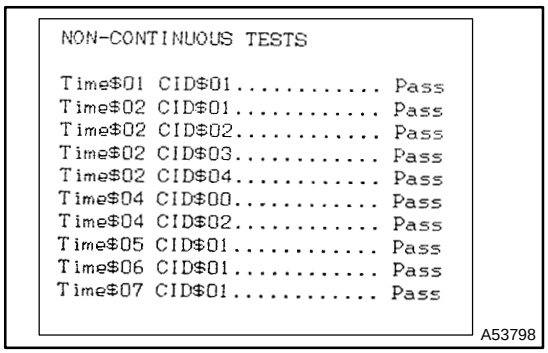

- To get there, go to Advanced OBD II, Onboard Tests, Non–continuous Tests.
- If all of the tests in the time $02 category Tests show Pass, the evaluation monitor has operated and no problem was detected.

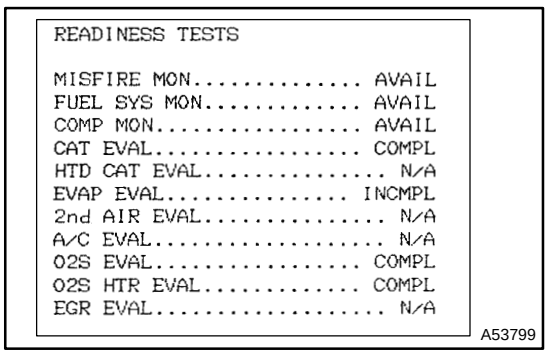

3. Fail Condition – Problem Detected by the ECM

If the EVAP evaluation monitor shows INCMPL, go to the Non–Continuous Test screen.

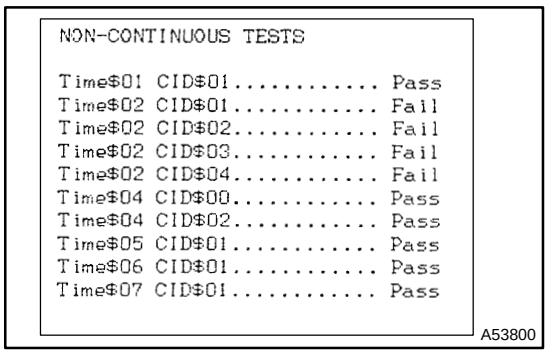

(1) If all Tests show Pass, the following may have occurred.
- The EVAP evaluation monitor did not operate.
- The EVAP evaluation monitor did not finish.
- The ECM withheld judgement.

(2) If one or more of the tests in the time $02 category show Fail, the EVAP evaluation monitor did operate and the ECM detected a problem.

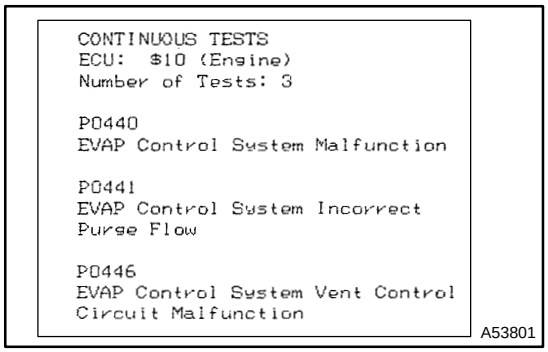

(3) Go to Continuous Tests screen. This is the only place DTC's are listed for the first trip.

NOTICE:
The DTC listed may not be valid. A second trip is needed to confirm the DTC.

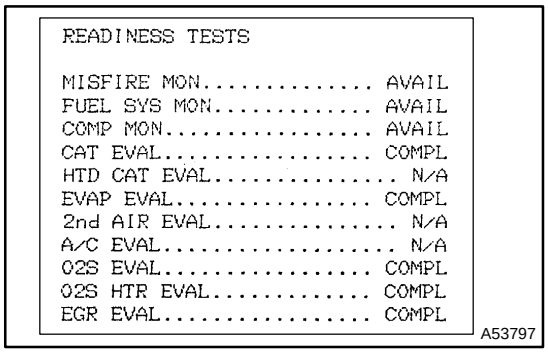

4. Second Trip Procedure

(a) Vehicle must be cold, ambient temperature approximately between 50°F – 95°F.

(b) Go to Readiness Tests screen.

(c) Drive the vehicle according to LA#4 drive cycle. Note the state of EVAP evaluation monitor. This procedure may take approximately 20 minutes or more.

NOTICE:
Do not shut off the engine – the results will be invalid.

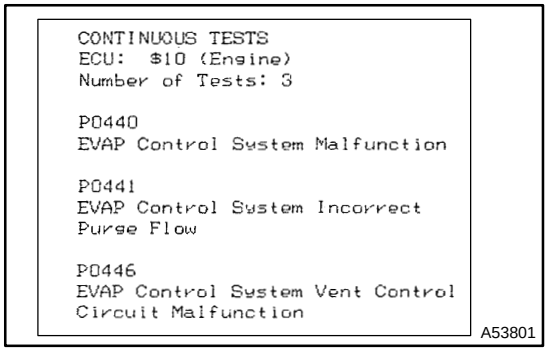

(d) If Readiness Tests changes to COMPL, the EVAP evaluation monitor has operated. Check for any stored DTC's.
- If a DTC has stored, the problem has been detected and confirmed by the ECM.
- If no DTC was found, the EVAP monitor operated but no problem was detected.

INSPECTION PROCEDURE

HINT:

- If DTC P0441, P0446, P0450 or P0451 is output after DTC P0440, first troubleshoot DTC P0441, P0446, P0450 or P0451. If no malfunction is detected, troubleshoot DTC P0440 next.
- Ask the customer whether, after the MIL came on, the customer found the fuel tank cap loose and tightened it. Also ask the customer whether the fuel tank cap was loose when refuelling. If the fuel tank cap was loose, it was the cause of the DTC. If the fuel tank cap was not loose or if the customer was not sure if it was loose, troubleshoot according to the following procedure.
- Read freeze frame data using hand–held tester or OBD II scan tool, as freeze frame data records the engine conditions when a malfunction is detected. When troubleshooting, it is useful for determining whether the vehicle was running or stopped, the engine was warmed up or not, the air–fuel ratio was lean or rich, etc. at the time of the malfunction.
- When the ENGINE RUN TIME in the freeze frame data is less than 200 seconds, carefully check the vapor pressure sensor.

1	PERFORM ACTIVE TEST BY HAND–HELD TESTER

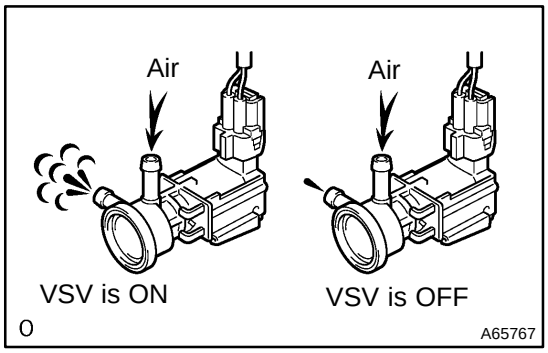

(a) Select the ACTIVE TEST mode on the hand–held tester.
(b) Disconnect the vacuum hose from the VSV for the EVAP.
(c) Start the engine.
(d) Select the item ”EVAP VSV(ALONE)” in the ACTIVE TEST and operate the shift solenoid valves.
(e) When the VSV for the EVAP is operated by the hand–held tester, apply the disconnected hose to your finger to check the suction.
Result:
VSV is ON: Disconnected hose sucks.
VSV is OFF: Disconnected hose does not suck.
(f) Select the item ”INTAKE CTL VSV1” in the ACTIVE TEST and operate the shift solenoid valves.

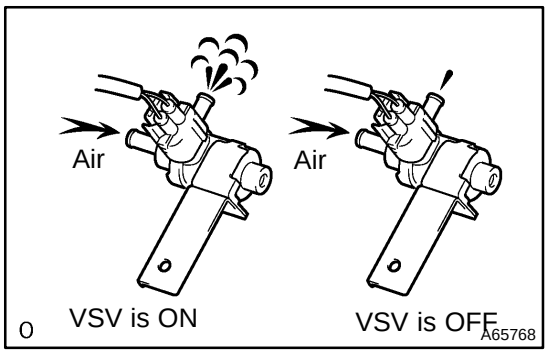

(g) Check the VSV for CCV operation when it is operated by the hand–held tester.
Result:
VSV is ON: Disconnected hose sucks.
VSV is OFF: Disconnected hose does not suck.

(h) Select the item ”TANK BYPASS VSV” in the ACTIVE TEST and operate the shift solenoid valves.

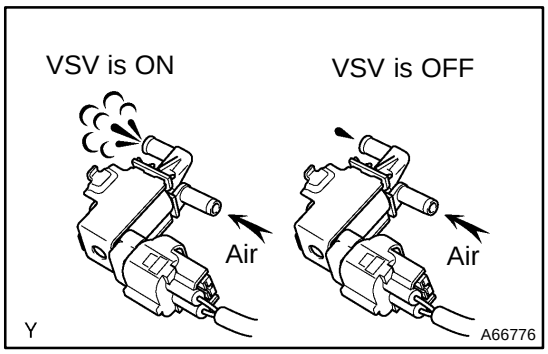

(i) Check the VSV for pressure switching valve operation when it is operated by the hand–held tester.
Result:
VSV is ON: Disconnected hose sucks.
VSV is OFF: Disconnected hose does not suck.

NG → **REPAIR OR REPLACE**

OK

2	PERFORM ACTIVE TEST BY EVAPORATIVE EMISSIONS LEAK(EVAP SYS CHECK)

(a) Connect the hand–held tester to the DLC3.
(b) Select the ”EVAP SYS CHECK” mode on the hand–held tester.
(c) Perform ”EVAP SYS CHECK”.
DISPLAY:

A	B	C
Scan tool detects a leak on the fuel tank side.	Scan tool detects a leak on the canister side.	Scan tool does not detect a leak in the EVAP system.

B → **Go to step 7**

C → **CHECK VACUUM HOSE**

A

3	CHECK FUEL TANK CAP ASSY(TOYOTA GENUINE PARTS)

(a) Replace to toyota genuine parts.
(b) After replace, perform ”EVAP SYS CHECK” by hand–held tester. (Go to step 2)

OK → **Go to step 4**

NG

REPLACE TO TOYOTA GENUINE PARTS

4	CHECK FUEL TANK CAP FOR CORRECTLY INSTALLED

(a) Correctly install fuel tank cap.
(b) After install, perform ”EVAP SYS CHECK” by hand–held tester. (Go to step 2)

OK → **Go to step 5**

NG

CORRECTLY INSTALL FUEL TANK CAP

5	INSPECT FUEL TANK CAP ASSY (See page 12–18)

(a) Replace to fuel tank cap assy.
(b) After replace, perform ”EVAP SYS CHECK” by hand–held tester. (Go to step 2)

OK → Go to step 6

NG

REPLACE FUEL TANK CAP ASSY

6	CHECK FUEL TANK INLET PIPE SUB–ASSY

(a) Remove the fuel tank cap.
(b) Visually inspect the fuel inlet pipe for damage.
(c) After repair or replace, perform ”EVAP SYS CHECK” by hand–held tester. (Go to step 2)

NG → REPLACE FUEL TANK INLET PIPE SUB–ASSY

OK

REPAIR OR REPLACE VACUUM HOSE

7	CHECK FUEL HOSE(VSV FOR PRESSURE SWITCHING VALVE–CHARCOAL CANISTER)

(a) Check for proper connection of the fuel tank and fuel EVAP pipe, fuel EVAP pipe and fuel tube under the floor, fuel tube under the floor and charcoal canister.
(b) Check the hose and tube for cracks, hole and damage.

NG → REPAIR OR REPLACE

OK

8	CHECK CHARCOAL CANISTER ASSY

NG → REPLACE CHARCOAL CANISTER ASSY

OK

9	INSPECT ECM(CHECK VOLTAGE)

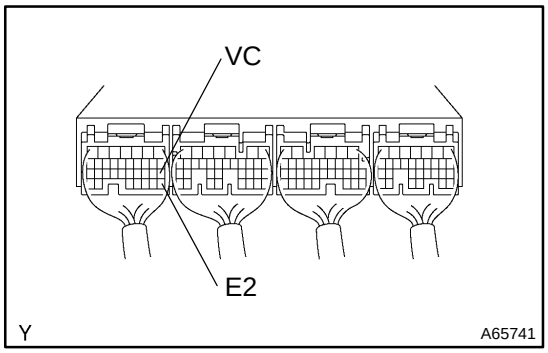

(a) Turn the ignition switch ON.
(b) Measure voltage between terminals VC and E2 of ECM E3 connector.
Voltage: 4.5 – 5.5 V

NG	CHECK AND REPLACE ECM

OK

10	INSPECT ECM(CHECK VOLTAGE)

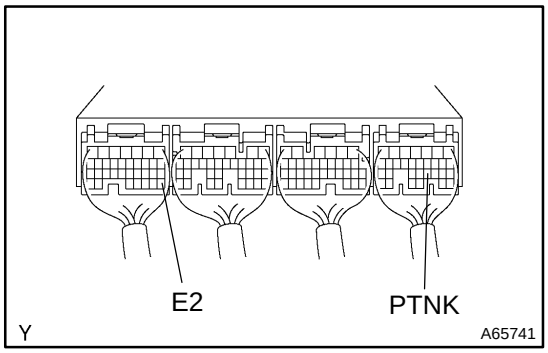

(a) Remove the fuel tank cap.
(b) Turn the ignition switch ON.
(c) Measure the voltage between terminals PTNK of the ECM E6 connector and E2 of the ECM E3 connector.
Voltage: 3.0 – 3.6 V

OK	Go to step 12

NG

11	CHECK HARNESS AND CONNECTOR(VAPOR PRESSURE SENSOR–ECM)

NG	REPAIR OR REPLACE HARNESS AND CONNECTOR

OK

REPLACE VAPOR PRESSURE SENSOR ASSY

12	CHECK FUEL TANK AND FUEL TANK OVER FILL CHECK VALVE FOR CRACKS AND DAMAGE

NG	REPLACE FUEL TANK ASSY

OK

IT IS LIKELY THAT VEHICLE USER DID NOT PROPERLY CLOSE FUEL TANK CAP

DTC	P0441	EVAPORATIVE EMISSION CONTROL SYSTEM INCORRECT PURGE FLOW

DTC	P0446	EVAPORATIVE EMISSION CONTROL SYSTEM MALFUNCTION

CIRCUIT DESCRIPTION

The vapor pressure sensor, VSV for Canister Closed Valve (CCV), VSV for pressure switching valve are used to detect abnormalities in the evaporative emission control system.

The ECM decides whether or not there is an abnormality in the evaporative emission control system by the vapor pressure sensor signal.

DTCs P0441 and P0446 are recorded by the ECM when evaporative emissions leak from the components within the dotted line in Fig. 1 below, or when there is a malfunction in the VSV for EVAP, the VSV for pressure switching valve or in the vapor pressure sensor itself.

Fig. 1

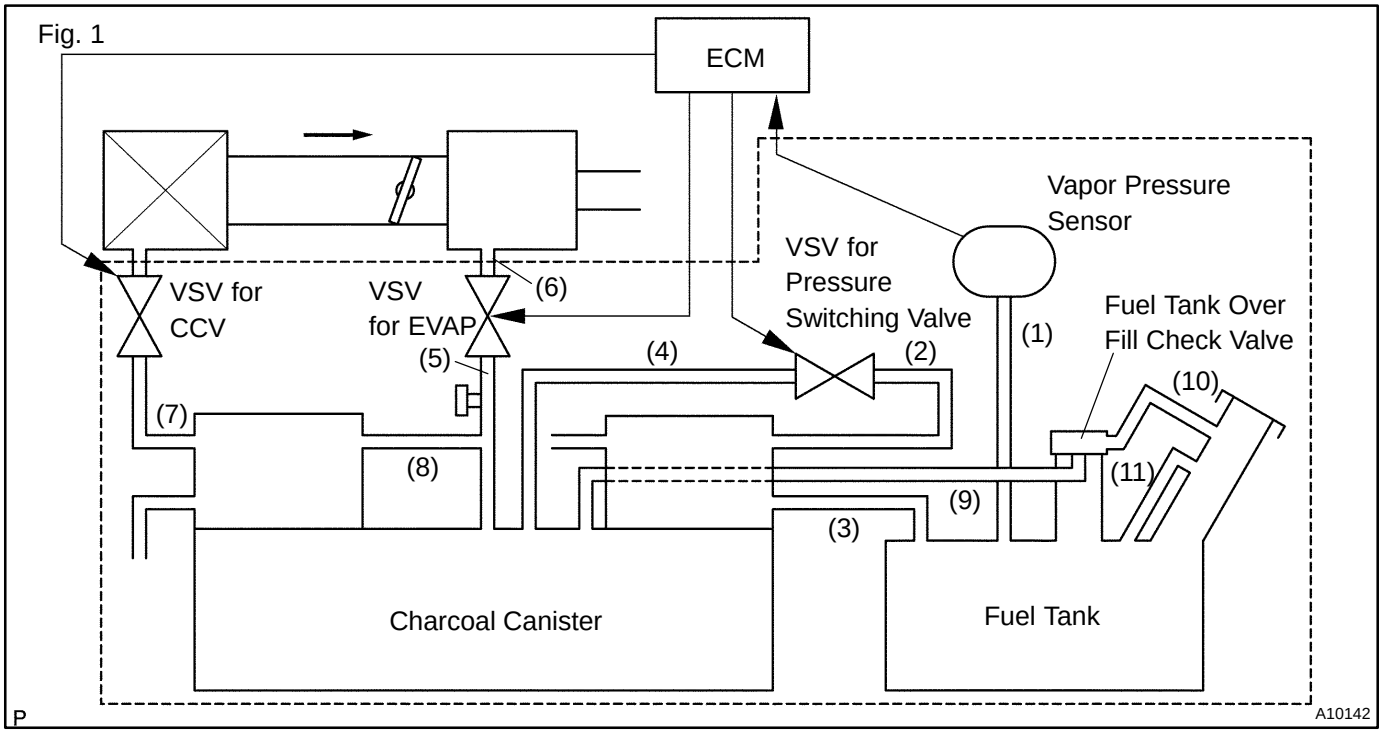

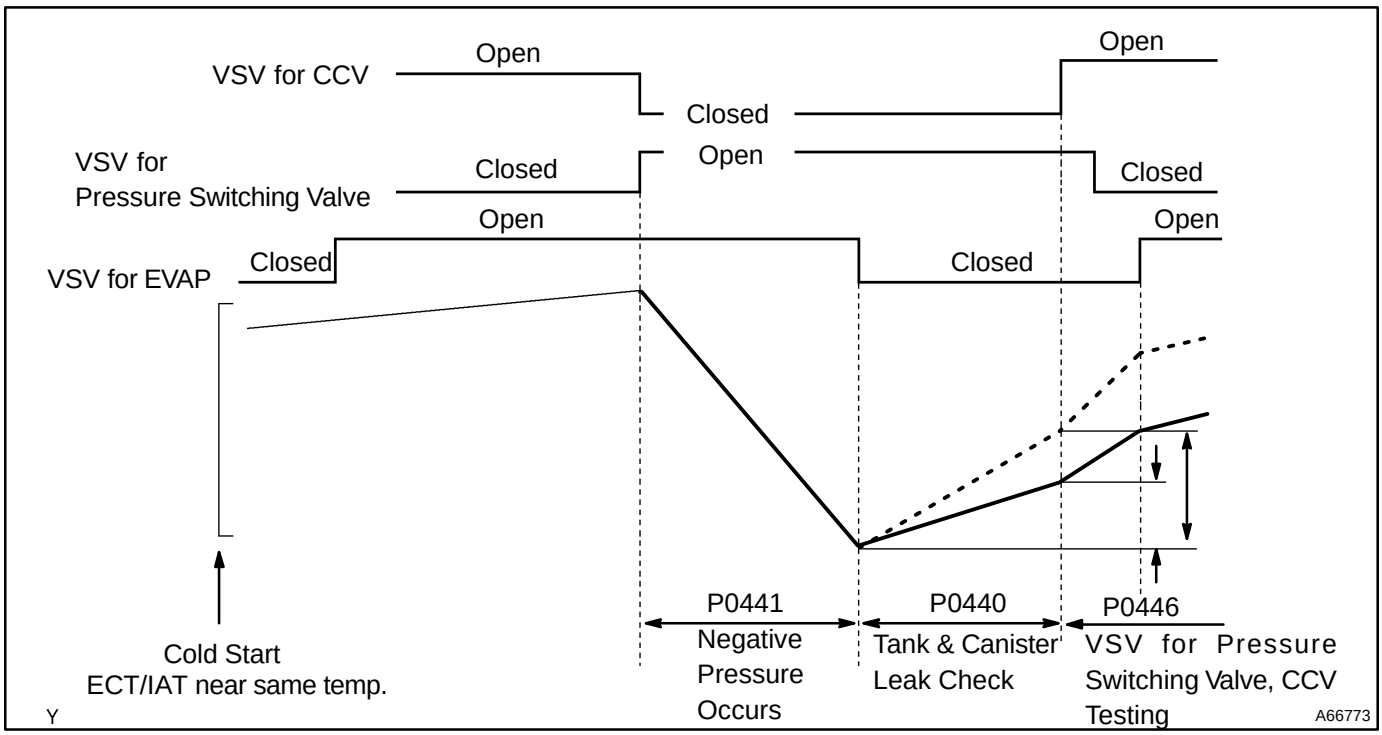

P0441:

The ECM closes the CCV and opens the VSV for pressure switching valve causing vacuum to increase in the entire EVAP system.

The ECM continues to operate the VSV for EVAP until the vacuum is increased to a specified point at which time the ECM closes the VSV for EVAP.

If the vacuum did not increase, or if the vacuum increased beyond the specified limit, the ECM judges the VSV for EVAP and related components to be faulty.

P0446:

When the vapor pressure rises to a specified point, the ECM opens the VSV for CCV. Pressure will increase rapidly because of the air allowed into the system. No increase or an increase below specified rate of pressure increase indicates a restriction on the air inlet side.

The ECM closes the VSV for pressure switching valve. This action blocks air entering the fuel tank side of system. The pressure rise on the fuel tank side is no longer as great.

If there was no change in pressure, the ECM will conclude the VSV for pressure switching valve did not close.

DTC No.	DTC Detecting Condition	Trouble Area
P0441	• Pressure in charcoal canister does not drop during purge control (2 trip detection logic) • During purge cut–off, pressure in charcoal canister is very low compared with atmospheric pressure (2 trip detection logic)	• Vacuum hose cracks, holed, blocked, damaged or disconnected ((1), (2), (3), (4), (5), (7), (8), (9), (10) and(11) in Fig. 1) • Fuel tank cap incorrectly installed • Open or short in vapor pressure sensor circuit • Vapor pressure sensor • Open or short in VSV circuit for EVAP • VSV for EVAP • Open or short in VSV circuit for CCV • VSV for CCV • Open or short in VSV circuit for pressure switching valve • VSV for pressure switching valve • Fuel tank cracked, holed or damaged • Charcoal canister cracked, holed or damaged • Fuel tank over fill check valve cracked or damaged • ECM
P0446	• When the vapor pressure rises to a specified point,the ECM opens the VSV for CCV. Pressure will increase rapidly because of the air allowed into the system. No increase or an increase below specified rate of pressure increase indicates a restriction on the air inlet side. • The ECM closes the VSV for pressure switching valve. The pressure rise is no longer as great. If there was no change in pressure, the ECM will conclude the VSV for pressure switching valve did not close.	

WIRING DIAGRAM

Refer to DTC P0440 on page 05–236.

INSPECTION PROCEDURE

HINT:

- If DTC P0441, P0446, P0450 or P0451 is output after DTC P0440, first troubleshoot DTC P0441, P0446, P0450 or P0451. If no other malfunctions than them are detected, troubleshoot DTC P0440 next.
- Read freeze frame data using the hand–held tester or OBD II scan tool, as freeze frame data records the engine conditions when the malfunction is detected. When troubleshooting, it is useful for determining whether the vehicle was running or stopped, the engine was warmed up or not, the air–fuel ratio was lean or rich, etc. at the time of the malfunction.

Hand–held tester:

1	PERFORM ACTIVE TEST BY HAND–HELD TESTER

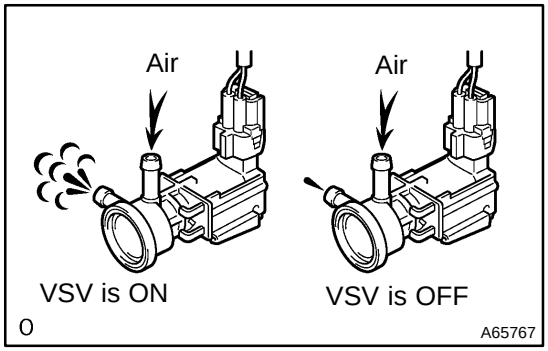

(a) Select the ACTIVE TEST mode on the hand–held tester.
(b) Disconnect the vacuum hose from the VSV for the EVAP.
(c) Start the engine.
(d) Select the item ”EVAP VSV(ALONE)” in the ACTIVE TEST and operate the shift solenoid valves.
(e) When the VSV for the EVAP is operated by the hand–held tester, apply the disconnected hose to your finger to check the suction.
Result:
VSV is ON: Disconnected hose sucks.
VSV is OFF: Disconnected hose does not suck.
(f) Select the item ”INTAKE CTL VSV1” in the ACTIVE TEST and operate the shift solenoid valves.

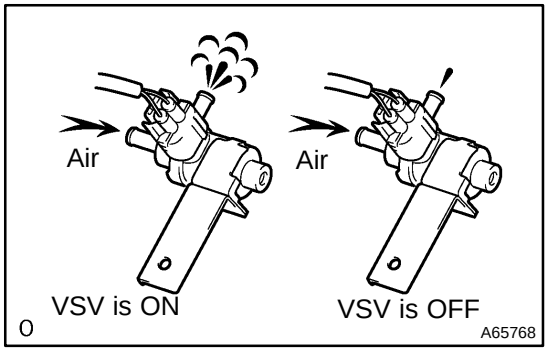

(g) Check the VSV for CCV operation when it is operated by the hand–held tester.
Result:
VSV is ON: Disconnected hose sucks.
VSV is OFF: Disconnected hose does not suck.

(h) Select the item ”TANK BYPASS VSV” in the ACTIVE TEST and operate the shift solenoid valves.

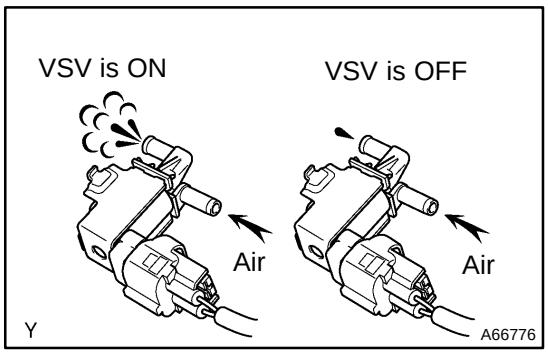

(i) Check the VSV for pressure switching valve operation when it is operated by the hand–held tester.
Result:
VSV is ON: Disconnected hose sucks.
VSV is OFF: Disconnected hose does not suck.

NG → **REPAIR OR REPLACE**

OK

2 PERFORM ACTIVE TEST BY EVAPORATIVE EMISSIONS LEAK

(a) Connect the hand–held tester to the DLC3.
(b) Select the ”EVAP SYS CHECK” mode on the hand–held tester.
(c) Perform ”EVAP SYS CHECK”.
DISPLAY:

A	B	C
Scan tool detects a leak on the fuel tank side.	Scan tool detects a leak on the canister side.	Scan tool does not detect a leak in the EVAP system.

B → **Go to step NO TAG**

C → **CHECK VACUUM HOSE**

A

3 CHECK FUEL TANK CAP ASSY(TOYOTA GENUINE PARTS)

(a) Replace to toyota genuine parts.
(b) After replace, perform ”EVAP SYS CHECK” by hand–held tester. (Go to step 2)

OK → **Go to step NO TAG**

NG

REPLACE TO TOYOTA GENUINE PARTS

4	CHECK FUEL TANK CAP FOR CORRECTLY INSTALLED

(a) Correctly install fuel tank cap.
(b) After install, perform ”EVAP SYS CHECK” by hand–held tester. (Go to step 2)

OK → Go to step NO TAG

NG

CORRECTLY INSTALL FUEL TANK CAP

5	INSPECT FUEL TANK CAP ASSY (See page 12–18)

(a) Replace to fuel tank cap assy.
(b) After replace, perform ”EVAP SYS CHECK” by hand–held tester. (Go to step 2)

OK → Go to step NO TAG

NG

REPLACE FUEL TANK CAP ASSY

6	CHECK FUEL TANK INLET PIPE SUB–ASSY(FOR DAMAGE)

(a) Remove the fuel tank cap.
(b) Visually inspect the fuel inlet pipe for damage.
(c) After repair or replace, perform ”EVAP SYS CHECK” by hand–held tester. (Go to step 2)

NG → REPLACE FUEL TANK INLET PIPE SUB–ASSY

OK

REPAIR OR REPLACE VACUUM HOSE

7	CHECK FUEL HOSE(VSV FOR PRESSURE SWITCHING VALVE–CHARCOAL CANISTER)

NG → REPAIR OR REPLACE

OK

8	CHECK EACH VSV CONNECTOR FOR LOOSENESS AND DISCONNECTION

NG → REPAIAR OR CONNECT VSV OR SENSOR CONNECTOR

OK

9	CHECK VACUUM HOSE(8, 9, 10 AND 11 IN FIG.1 IN CIRCUIT DESCRIPTION)

(a) Check that the vacuum hose is connected correctly.
(b) Check the vacuum hose for looseness and disconnection.
(c) Check the vacuum hose for cracks, hole, damage and blockage.

NG → **REPAIR OR REPLACE**

OK

10	INSPECT ECM(CHECK VOLTAGE)

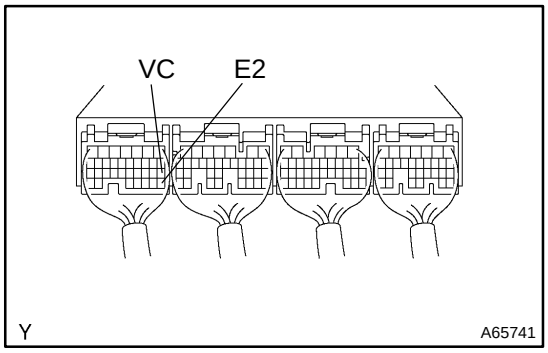

(a) Turn the ignition switch ON.
(b) Measure voltage between terminals VC and E2 of ECM E3 connector.
Voltage: 4.5 – 5.5 V

NG → **CHECK AND REPLACE ECM**

OK

11	INSPECT ECM(CHECK VOLTAGE)

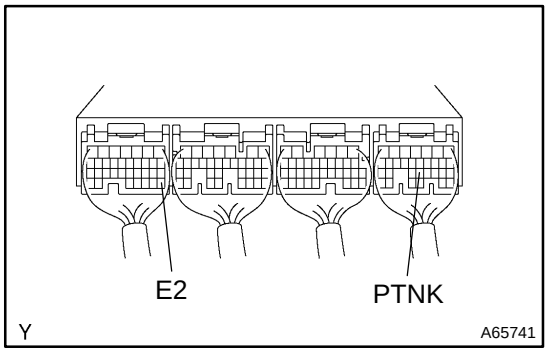

(a) Remove the fuel tank cap.
(b) Turn the ignition switch ON.
(c) Measure the voltage between terminals PTNK of the ECM E6 connector and E2 of the ECM E2 connector.
Voltage: 3.0 – 3.6 V

OK → **Go to step NO TAG**

NG

12	CHECK HARNESS AND CONNECTOR(VAPOR PRESSURE SENSOR–ECM)

NG → **REPAIR OR REPLACE HARNESS AND CONNECTOR**

OK

REPLACE VAPOR PRESSURE SENSOR ASSY

13	CHECK VACUUM HOSE(INTAKE MANIFOLD–VSV FOR EVAP, VSV FOR EVAP–CHARCOAL CANISTER)

(a) Check that the vacuum hose is connected correctly.
(b) Check the vacuum hose for looseness and disconnection.
(c) Check the vacuum hose for cracks, hole, damage and blockage.

NG → REPAIR OR REPLACE

OK

14	CHECK OPERATION OF VSV(FOR EVAP) (See page 12–13)

OK → Go to step NO TAG

NG

CHECK VACUUM HOSE

15	CHECK HARNESS AND CONNECTOR(E.F.I. RELAY–VSV FOR EVAP, VSV FOR EVAP–ECM)

NG → REPAIR OR REPLACE HARNESS AND CONNECTOR

OK

16	CHECK VACUUM HOSE(VSV FOR CCV–CHARCOAL CANISTER)

(a) Check that the vacuum hose is connected correctly.
(b) Check the vacuum hose for looseness and disconnection.
(c) Check the vacuum hose for cracks, hole damage and blockage.

NG → CORRECTLY INSTALL FUEL TANK CAP

OK

17	CHECK OPERATION OF VSV(FOR CCV) (See page 12–13)

OK → Go to step NO TAG

NG

REPLACE VSV AND CHARCOAL CANISTER, AND THEN CLEAN VACUUM HOSE

18	CHECK HARNESS AND CONNECTOR(E.F.I. RELAY–VSV FOR CCV, VSV FOR CCV–ECM)

NG → REPAIR OR REPLACE HARNESS AND CONNECTOR

OK

19	CHECK OPERATION OF VSV(FOR PRESSURE SWITCHING VALVE) (See page 12–13)

OK → Go to step NO TAG

NG

REPLACE VSV AND CHARCOAL CANISTER, AND THEN CLEAN VACUUM HOSE

20	CHECK HARNESS AND CONNECTOR(E.F.I. RELAY–VSV FOR PRESSURE SWITCHING VALVE, VSV FOR PRESS)

NG → REPAIR OR REPLACE HARNESS AND CONNECTOR

OK

21	PERFORM ACTIVE TEST BY HAND–HELD TESTER(FUEL TANK ASSY)

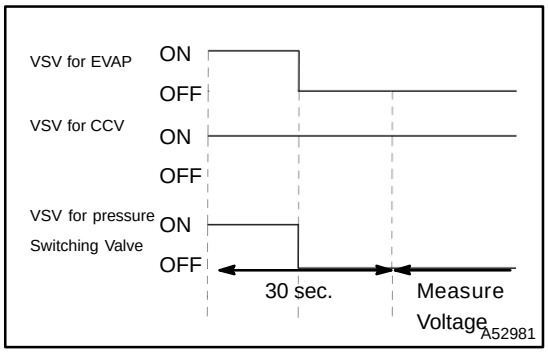

(a) Connect the hand–held tester to the DLC3.
(b) Select the ACTIVE TEST mode on the hand–held tester.
(c) Start the engine.
(d) Switch the VSV for the CCV ON by the hand–held tester.
(e) Switch the VSV for the EVAP OFF and the VSV for the pressure switching valve ON by the hand–held tester and it remains on for 30 sec.
(f) Measure the voltage between terminals PTNK and E2 of the ECM connectors after switching the VSV for the EVAP from OFF to ON, and the VSV for the pressure switching valve from ON to OFF.
Voltage: 2.5 V or less

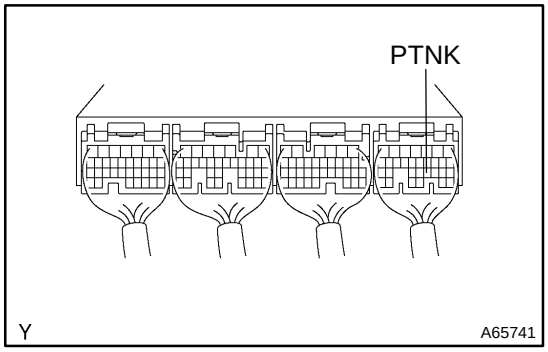

NG → REPLACE FUEL TANK ASSY

OK

22	PERFORM ACTIVE TEST BY HAND–HELD TESTER(CHARCOAL CANISTER ASSY)

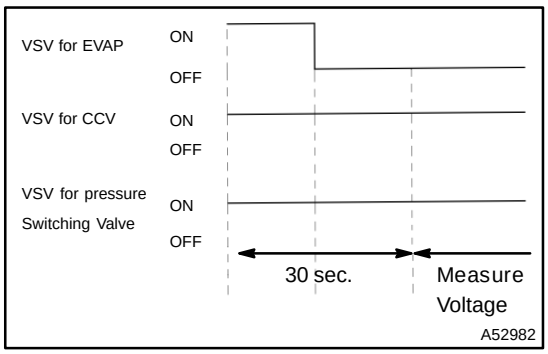

(a) Connect the hand–held tester to the DLC3.
(b) Select the ACTIVE TEST mode on the hand–held tester.
(c) Start the engine.
(d) Switch the VSV for the CCV ON by the hand–held tester.
(e) Switch the VSV for the EVAP OFF and the VSV for the pressure switching valve ON by the hand–held tester and it remains on for 30 sec.
(f) Measure the voltage between terminals PTNK and E2 of the ECM connectors after switching the VSV for the EVAP from OFF to ON.
Voltage: 2.5 V or less

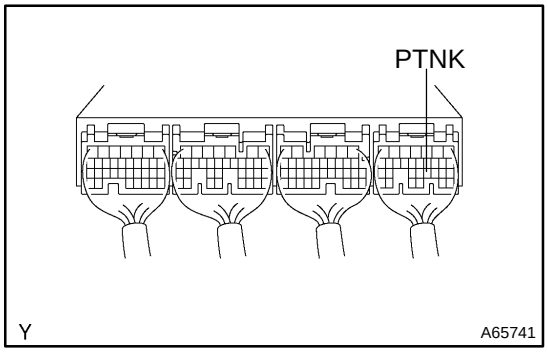

NG → **REPLACE CHARCOAL CANISTER ASSY**

OK

23	CHECK CHARCOAL CANISTER ASSY (See page 12–18)

NG → **REPLACE CHARCOAL CANISTER ASSY**

OK

24	CHECK FUEL TANK OVER FILL CHECK VALVE (See page 11–7)

NG → **REPLACE VSV AND CHARCOAL CANISTER, AND THEN CLEAN VACUUM HOSE**

OK

REPLACE CHARCOAL CANISTER ASSY

OBD II scan tool (excluding hand–held tester):

1	CHECK EVAPORATIVE EMISSIONS LEAK

NG → **REPAIR OR REPLACE**

OK

2	CHECK FUEL TANK CAP ASSY(TOYOTA GENUINE PARTS)

NG → REPLACE TO TOYOTA GENUINE PARTS

OK

3	CHECK FUEL TANK CAP FOR CORRECTLY INSTALLED

NG → CORRECTLY INSTALL FUEL TANK CAP

OK

4	CHECK FUEL TANK CAP ASSY (See page 12–18)

NG → REPLACE FUEL TANK CAP ASSY

OK

5	CHECK FUEL TANK INLET PIPE SUB–ASSY(FOR DAMAGE)

(a) Remove the fuel tank cap.
(b) Visually inspect the fuel inlet pipe for damage.

NG → REPLACE FUEL TANK INLET PIPE SUB–ASSY

OK

6	CHECK VACUUM HOSE(VAPOR PRESSURE SENSOR–FUEL TANK, CHARCOAL CANISTER–VSV FOR P)

NG → REPAIAR OR CONNECT VSV OR SENSOR CONNECTOR

OK

7	CHECK FUEL HOSE(FUEL TANK–CHARCOAL CANISTER)

NG → REPAIR OR REPLACE

OK

8	CHECK EACH VSV CONNECTOR FOR LOOSENESS AND DISCONNECTION

NG → REPAIAR OR CONNECT VSV OR SENSOR CONNECTOR

OK

9	CHECK VACUUM HOSE

(a) Check that the vacuum hose is connected correctly.
(b) Check the vacuum hose for looseness and disconnection.
(c) Check the vacuum hose for cracks, hole damage and blockage.

NG → **CHECK FUEL TANK OVER FILL CHECK VALVE**

OK

10	INSPECT ECM(VC–E2)

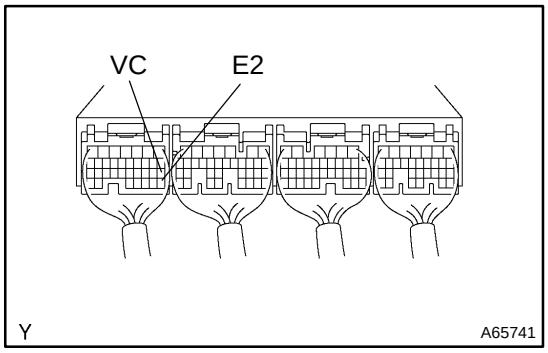

(a) Turn the ignition switch ON.
(b) Measure voltage between terminals VC and E2 of ECM E3 connector.
Voltage: 4.5 – 5.5 V

NG → **CHECK AND REPLACE ECM**

OK

11	INSPECT ECM(PTNK–E2)

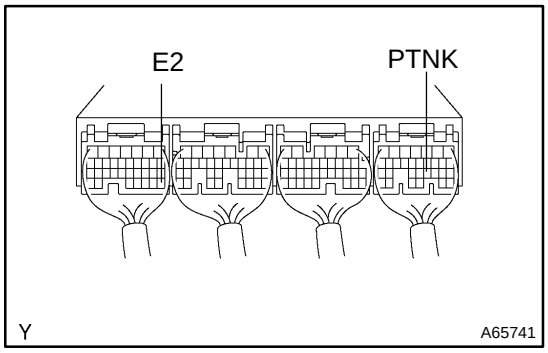

(a) Remove the fuel tank cap.
(b) Turn the ignition switch ON.
(c) Measure the voltage between terminals PTNK of the ECM E6 connector and E2 of the ECM E3 connector.
Voltage: 3.0 – 3.6 V

OK → **Go to step NO TAG**

NG

12	CHECK HARNESS AND CONNECTOR(VAPOR PRESSURE SENSOR–ECM)

NG → **REPAIR OR REPLACE HARNESS AND CONNECTOR**

OK

REPLACE VAPOR PRESSURE SENSOR ASSY

13	CHECK VSV(FOR EVAP)

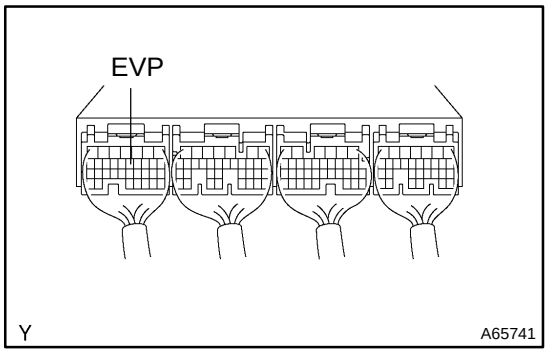

(a) Turn the ignition switch ON.
(b) Check the VSV function.
(1) Connect the terminal EVP of the ECM E3 connector and the body ground (VSV ON).
(2) Disconnect the terminal EVP of the ECM E3 connector and body ground (VSV OFF).

(1) VSV is ON:
Air from port E flows out through port F.
(2) VSV is OFF:
Air from port E flows out through port F with a little difficultly.

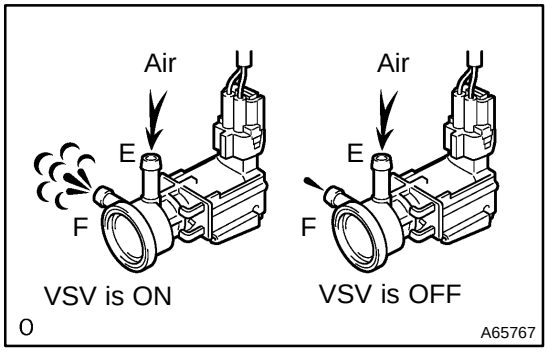

OK → **Go to step NO TAG**

NG

14	CHECK OPERATION OF VSV(FOR EVAP) (See page 12–13)

OK → **Go to step NO TAG**

NG

REPLACE VSV AND CHARCOAL CANISTER, AND THEN CLEAN VACUUM HOSE

15	CHECK HARNESS AND CONNECTOR(E.F.I. RELAY–VSV FOR EVAP, VSV FOR EVAP–ECM)

NG → **REPAIR OR REPLACE HARNESS AND CONNECTOR**

OK

CHECK AND REPLACE ECM

16	CHECK VSV(FOR CCV)

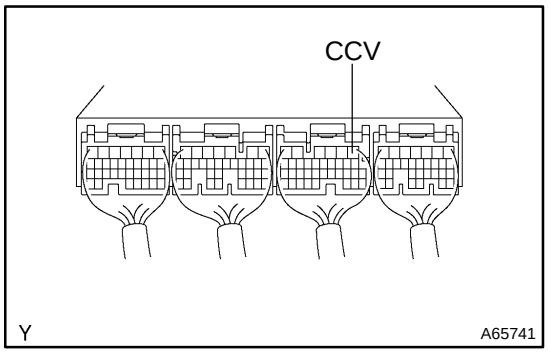

(a) Turn the ignition switch ON.
(b) Check the VSV function.
  (1) Connect the terminal CCV of the ECM E5 connector and the body ground (VSV ON).
  (2) Disconnect the terminal CCV of the ECM E5 connector and the body ground (VSV OFF).

VSV is ON: Air does not flow from port E to port F.
VSV is OFF: Air from port E flows out through port F.

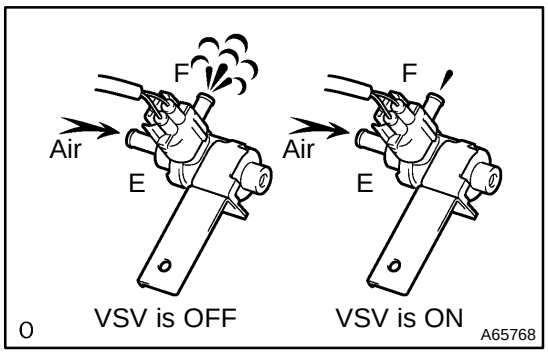

OK → **Go to step NO TAG**

NG

17	CHECK OPERATION OF VSV(FOR CCV) (See page 12–13)

OK → **Go to step NO TAG**

NG

REPLACE VSV AND CHARCOAL CANISTER, AND THEN CLEAN VACUUM HOSE

18	CHECK HARNESS AND CONNECTOR(E.F.I. RELAY–VSV FOR CCV, VSV FOR CCV–ECM)

NG → **REPAIR OR REPLACE HARNESS AND CONNECTOR**

OK

CHECK AND REPLACE ECM

19	CHECK VSV(FOR PRESSURE SWITCHING VALVE)

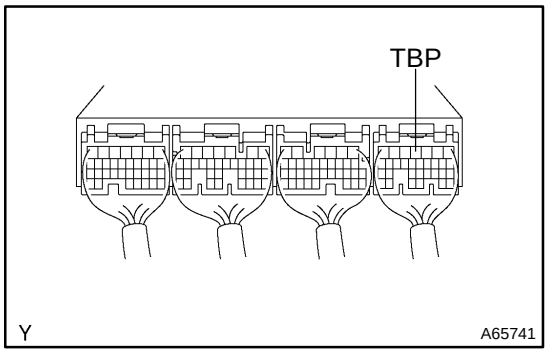

(a) Turn the ignition switch ON.
(b) Check the VSV function.
(1) Connect the terminal TBP of the ECM E6 connector and the body ground (VSV ON).
(2) Disconnect the terminal TBP of the ECM E6 connector and the body ground (VSV OFF).

(1) VSV is ON:
Air from port E flows out through port F.
(2) VSV is OFF:
Air does not flow from port E to port F.

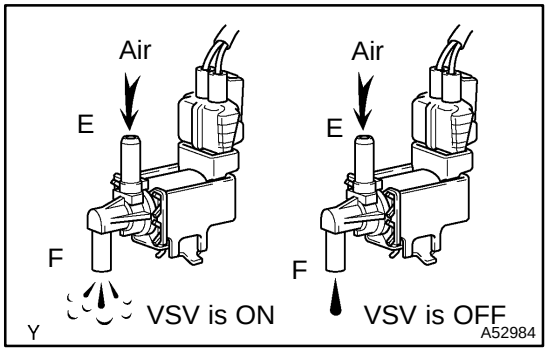

OK → **Go to step NO TAG**

NG

20	CHECK OPERATION OF VSV(FOR PRESSURE SWITCHING VALVE) (See page 12–18)

OK → **Go to step NO TAG**

NG

REPLACE VSV AND CHARCOAL CANISTER, AND THEN CLEAN VACUUM HOSE

21	CHECK HARNESS AND CONNECTOR(E.F.I. RELAY–VSV FOR PRESSURE SWITCHING VALVE, VSV FOR PRESS)

NG → **REPAIR OR REPLACE HARNESS AND CONNECTOR**

OK

CHECK AND REPLACE ECM

22	CHECK FUEL TANK OVER FILL CHECK VALVE

NG → REPLACE FUEL TANK OVER FILL CHECK VALVE OR FUEL TANK

OK

CHECK AND REPLACE ECM

DTC	P0450	EVAPORATIVE EMISSION CONTROL SYSTEM PRESSURE SENSOR MALFUNCTION

DTC	P0451	EVAPORATIVE EMISSION CONTROL SYSTEM PRESSURE SENSOR RANGE/PERFORMANCE

CIRCUIT DESCRIPTION

The vapor pressure sensor, VSV for Canister Closed Valve (CCV) and VSV for pressure switching valve are used to detect abnormalities in the evaporative emission control system.

The ECM decides whether or not there is an abnormality in the evaporative emission control system by the vapor pressure sensor signal.

DTC P0450 or P0451 is recorded by the ECM when the vapor pressure sensor malfunctions.

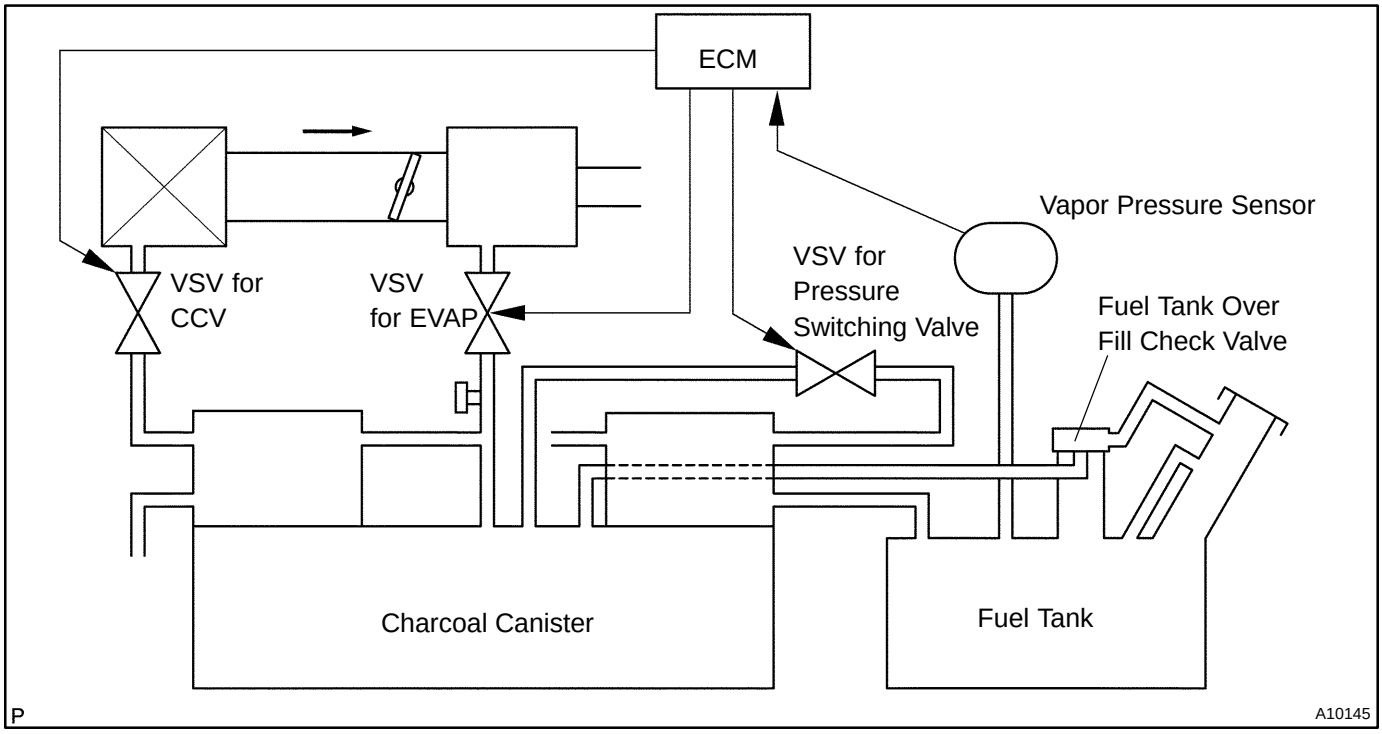

DTC No.	DTC Detecting Condition	Trouble Area
P0450	10 seconds or less after engine starting condition (a) or (b) continues for 7 seconds or more: (2 trip detection logic) (e) Vapor pressure sensor value < –4.0 kPa (–30 mmHg, –1.2 in.Hg) (f) Vapor pressure sensor value ≧ 2.0 kPa (15 mmHg, 0.6 in.Hg)	• Open or short in vapor pressure sensor circuit • Vapor pressure sensor • ECM
P0451	Vapor pressure sensor output extremely changes under conditions of (a) or (b): (2 trip detection logic) (g) Vehicle speed: 0 km/h (0mph), Engine speed: Idling and VSV for pressure switching valve is OFF (h) High vapor pressure sensor	

WIRING DIAGRAM

Refer to DTC P0440 on page 05–236.

INSPECTION PROCEDURE

HINT:

- If DTC P0441, P0446, P0450 or P0451 is output after DTC P0440, first troubleshoot DTC P0441, P0446 P0450 or P0451. If no other malfunctions than them are detected, troubleshoot DTC P0440 next.
- Read freeze frame data using the hand–held tester or OBD II scan tool, as freeze frame data records the engine conditions when the malfunction is detected. When troubleshooting, it is useful for determining whether the vehicle was running or stopped, the engine was warmed up or not, the air–fuel ratio was lean or rich, etc. at the time of the malfunction.

1	INSPECT ECM(CHECK VOLTAGE)

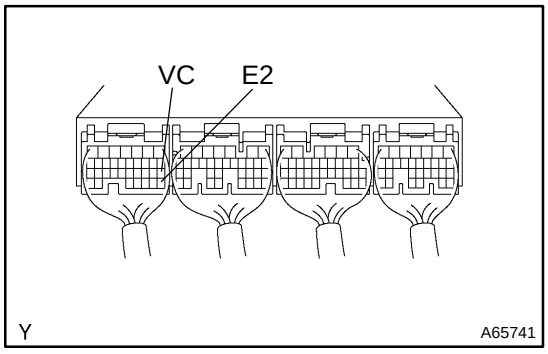

(a) Turn the ignition switch ON.
(b) Measure voltage between terminals VC and E2 of ECM E3 connector.
Voltage: 4.5 – 5.5 V

NG	CHECK AND REPLACE ECM

OK

2	INSPECT ECM(CHECK VOLTAGE)

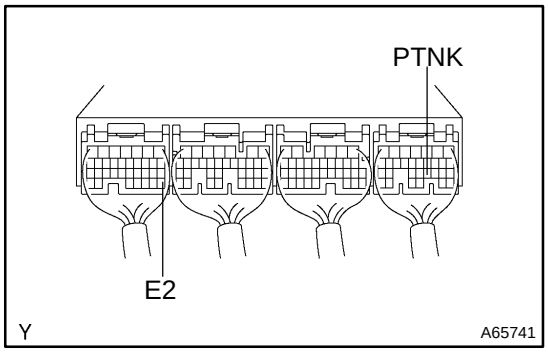

(a) Remove the fuel tank cap.
(b) Turn the ignition switch ON.
(c) Measure the voltage between terminals PTNK of the ECM E6 connector and E2 of the ECM E2 connector.
Voltage: 3.0 – 3.6 V

OK	CHECK AND REPLACE ECM

NG

3	CHECK HARNESS AND CONNECTOR(VAPOR PRESSURE SENSOR–ECM)

NG	REPAIR OR REPLACE HARNESS AND CONNECTOR

OK

REPLACE VAPOR PRESSURE SENSOR ASSY

DTC P0500 VEHICLE SPEED SENSOR MALFUNCTION

CIRCUIT DESCRIPTION

The vehicle speed sensor outputs a 4–pulse signal for every revolution of the rotor shaft, which is rotated by the transmission output shaft via the driven gear. After this signal is converted into a more precise rectangular waveform by the waveform shaping circuit inside the combination meter, it is then transmitted to the ECM. The ECM determines the vehicle speed based on the frequency of these pulse signals.

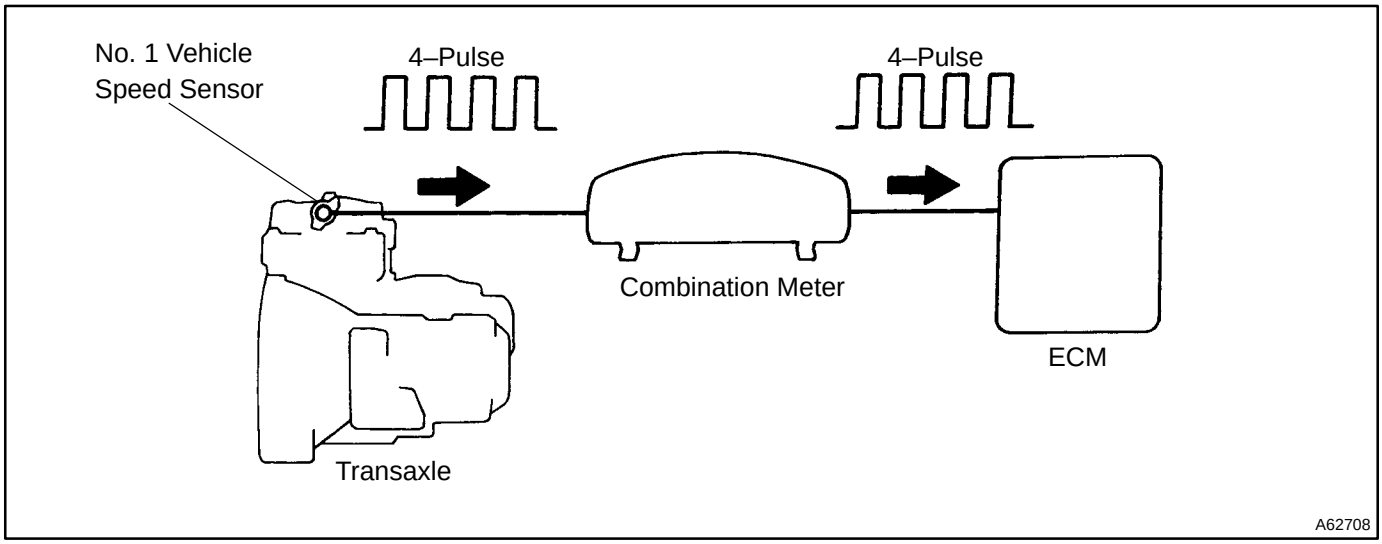

DTC No.	DTC Detecting Condition	Trouble Area
P0500	During vehicle is being driven, no vehicle speed sensor signal to ECM (2 trip detection logic)	• Combination meter • Open or short in vehicle speed sensor circuit • Vehicle speed sensor • ECM

WIRING DIAGRAM

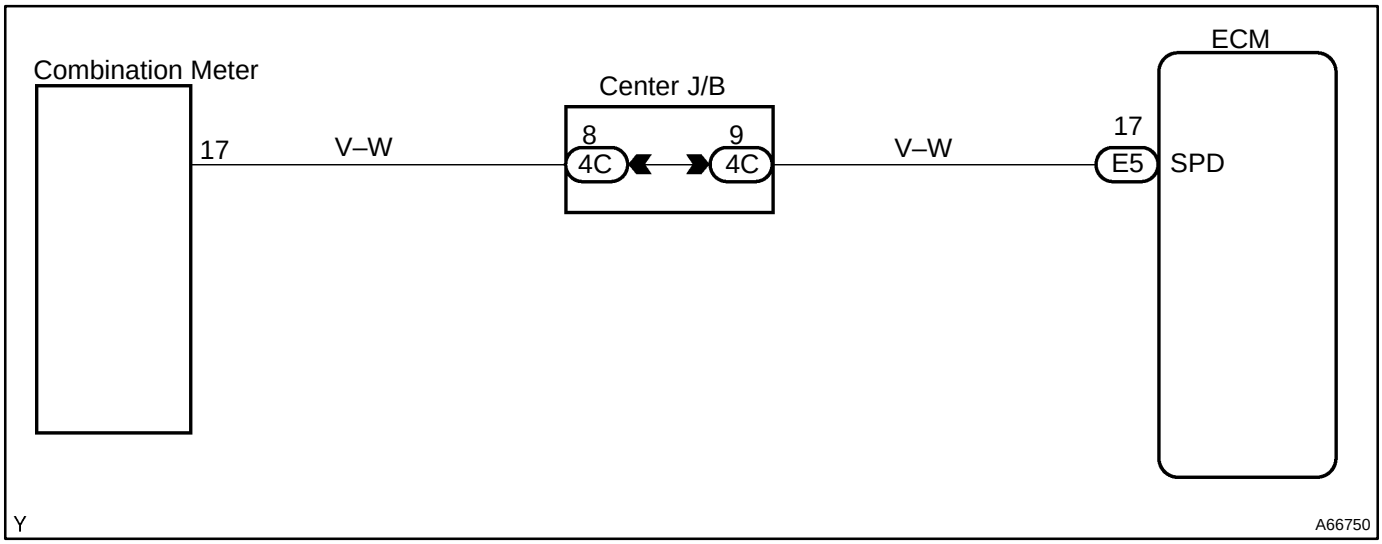

INSPECTION PROCEDURE

HINT:

HINT:Read freeze frame data using the hand–held tester or OBD II scan tool, as freeze frame data records the engine conditions when the malfunction is detected. When troubleshooting, it is useful for determining whether the vehicle was running or stopped, the engine was warmed up or not, the air–fuel ratio was lean or rich, etc. at the time of the malfunction.

1	CHECK OPERATION OF SPEEDOMETER

(a) Drive the vehicle and check if the operation of the speedometer in the combination meter is normal.

HINT:

The vehicle speed sensor is operating normally if the speedometer display is normal.

NG → **CHECK SPEEDOMETER CIRCUIT**

OK

2	INSPECT ECM

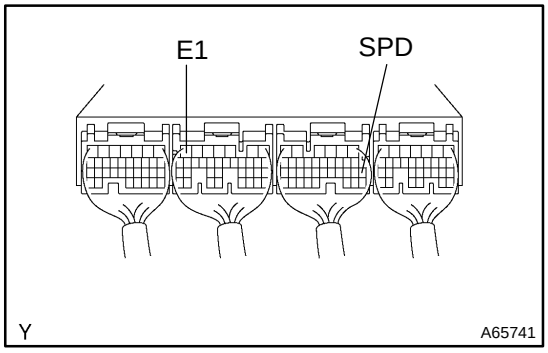

(a) Shift the lever to the neutral position.
(b) Jack up the vehicle.
(c) Turn the ignition switch ON.
(d) Measure the voltage between terminal SPD of the ECM connector and E1 of the ECM connector with turning the wheel slowly.
Voltage: Generated intermittently

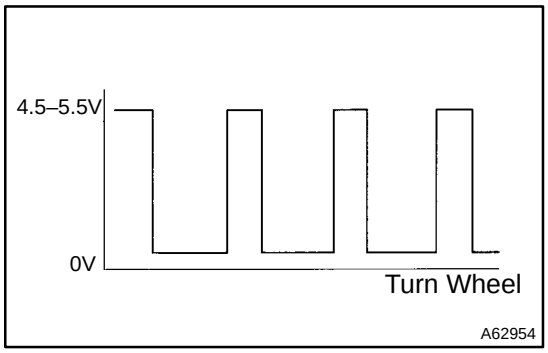

NG → **REPAIR OR REPLACE HARNESS AND CONNECTOR**

OK

CHECK AND REPLACE ECM

DTC P0505 IDLE CONTROL SYSTEM MALFUNCTION

CIRCUIT DESCRIPTION

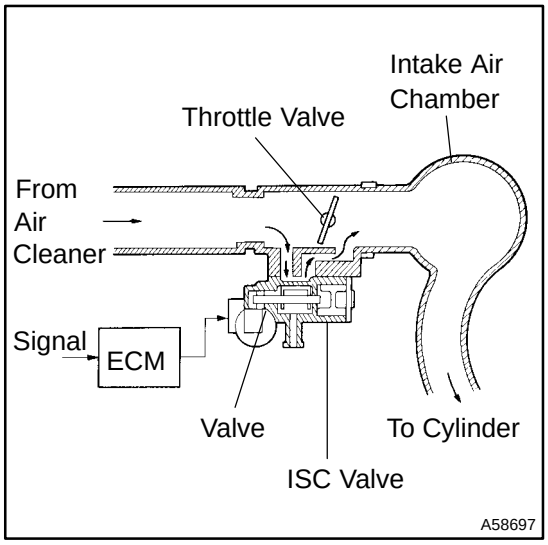

The rotary solenoid type ISC valve is located under the throttle body and intake air bypassing the throttle valve is directed to the ISC valve through the passage.
In this way the intake air volume bypassing the throttle valve is regulated, controlling the engine speed.
The ECM operates the ISC valve only to perform idle–up and provide feedback for the target idling speed.

DTC No.	DTC Detecting Condition	Trouble Area
P0505	Idle speed continues to be apart greatly from target speed	• PCV hose • Open or short in ISC valve circuit • ISC valve is stuck or closed • Open or short in A/C switch circuit • Air induction system • ECM

WIRING DIAGRAM

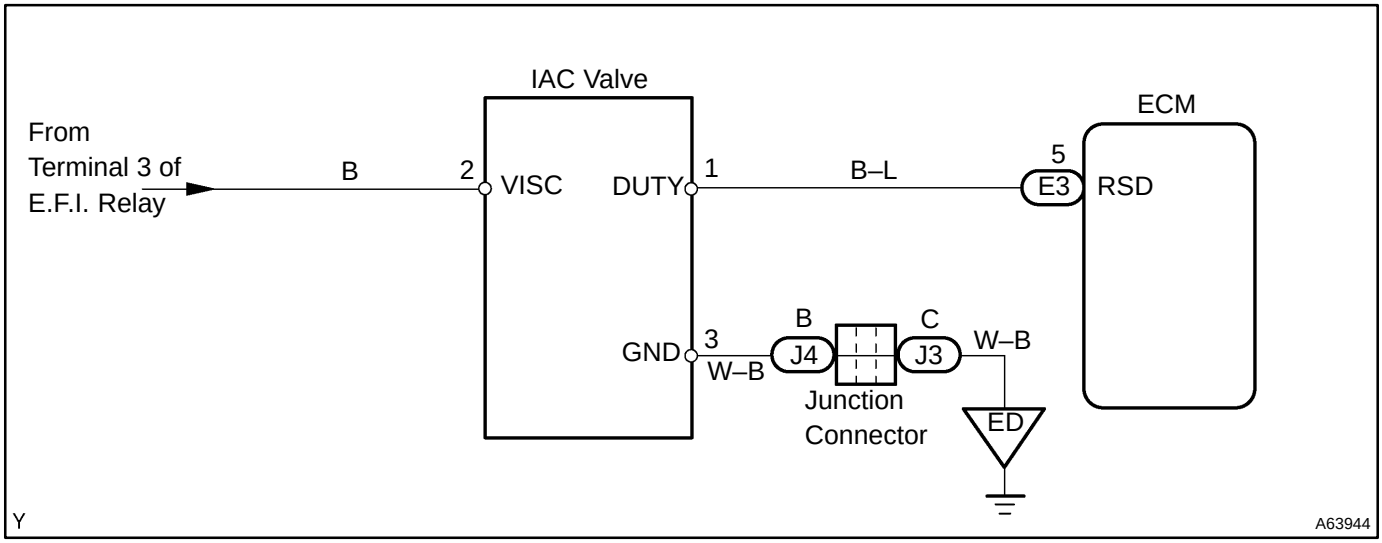

INSPECTION PROCEDURE

HINT:
Read freed frame data using hand–held tester. Because freeze frame records the engine conditions when the malfunction is detected, when troubleshooting it is useful for determining whether the vehicle was running or stopped, the engine warmed up or not, the air–fuel ratio lean or rich, etc. at the time of the malfunction.

1	PERFORM ACTIVE TEST BY OBD II SCAN TOOL OR HAND–HELD TESTER(CHECK OPERATION OF THE ISC VALVE)

(a) Warm up the engine to the normal operating temperature.
(b) Switch off all the accessories.
(c) Switch off the A/C.
(d) Shift the lever into the neutral position.
(e) Connect the hand–held tester or OBD II scan tool to the DLC3 on the vehicle.
(f) Check the difference of the engine speed in less than 5 seconds and more than 5 seconds.
Difference of engine speed: More than 100 rpm.

OK → **CHECK FOR INTERMITTENT PROBLEMS**

NG

2	CHECK CONNECTION OF PCV HOSE

NG → **REPAIR OR REPLACE PCV HOSE**

OK

3	CHECK HARNESS AND CONNECTOR

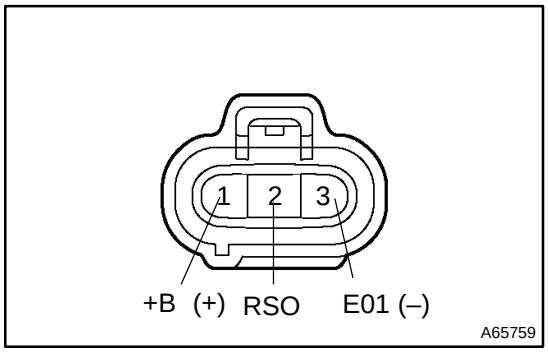

(a) Disconnect the ISC valve connector.
(b) Turn the ignition switch ON.
(c) Measure voltage between terminals +B and E01 of the ISC valve connector.
Voltage: 9 – 14 V

OK → **REPAIR OR REPLACE HARNESS AND CONNECTOR**

NG

4	CHECK HARNESS AND CONNECTOR(RSO CIRCUIT)

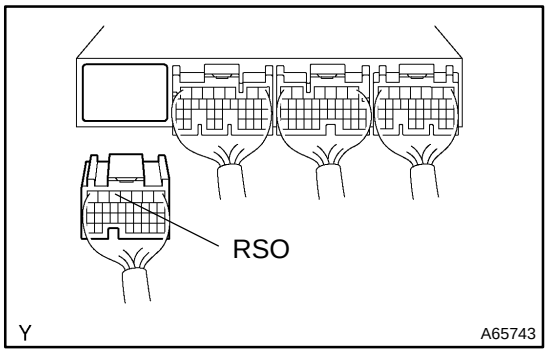

(a) Disconnect the ECM E3 connector.
(b) Check continuity between the terminals RSO of the ECM connector and RSO of the ISC valve connector.
Resistance: 1 Ω or less
(c) Check for short between the terminals RSO of the ECM connector and GND of the ISC valve connector.
Resistance: 1 MΩ or more

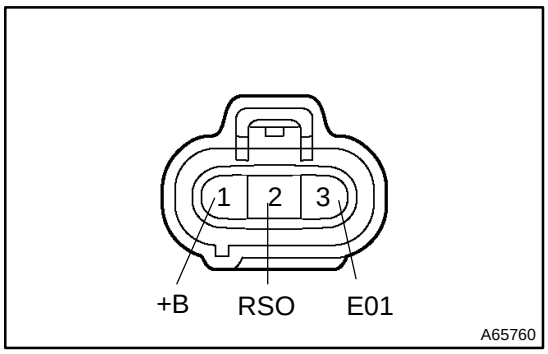

NG → **REPAIR OR REPLACE HARNESS AND CONNECTOR**

OK

5	INSPECT THLOTTLE BODY IDLE SPEED CONTROL VALVE ASSY (See page 10–12)

NG → **REPLACE THLOTTLE BODY IDLE SPEED CONTROL VALVE ASSY**

OK

CHECK AND REPLACE ECM

STARTER SIGNAL CIRCUIT

CIRCUIT DESCRIPTION

When the engine is cranked, the intake air flow is slow, so fuel vaporization is poor. A rich mixture is therefore necessary in order to achieve good startability. While the engine is being cranked, the battery voltage is applied to terminal STA of the ECM. The starter signal is mainly used to increase the fuel injection volume for the starting injection control and after–start injection control.

WIRING DIAGRAM

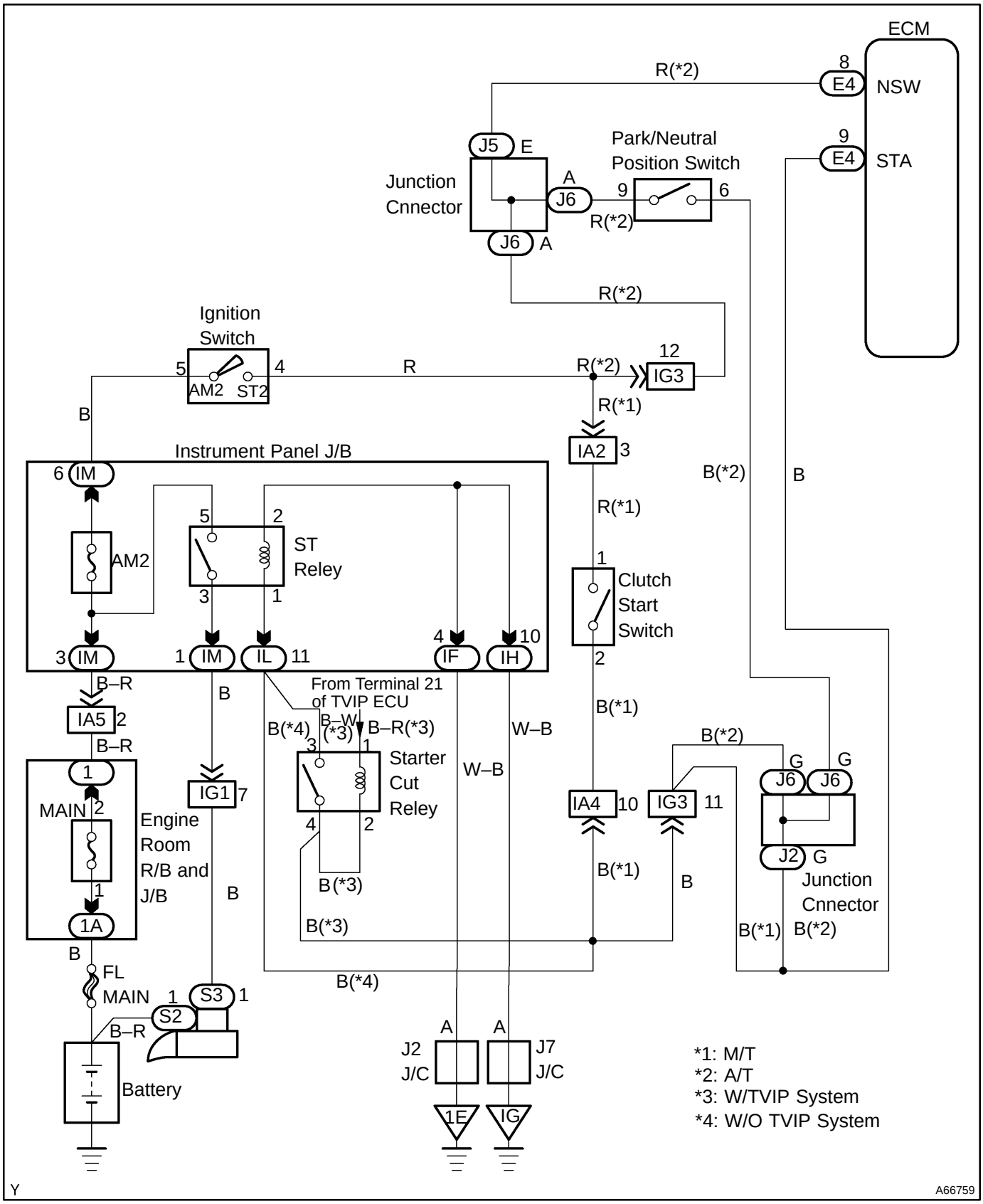

INSPECTION PROCEDURE

HINT:

This diagnostic chart is based on the premise that the engine is cranked normally. If the engine is not cranked, proceed to the problem symptoms table on page .

Hand–held tester:

1	READ VALUE OF HAND–HELD TESTER(STARTER SIGNAL)

(a) Connect the hand–held tester to the DLC3.
(b) Turn the ignition switch ON and push the hand–held tester main switch ON.
(c) Select the item ”STARTER SIG” in the DATALIST and read its value displayed on or hand–held tester.
(d) Read the STA signal on the hand–held tester while the starter is operating.
Result:

Ignition Switch Position	ON	START
STA Signal	OFF	ON

OK → **PROCEED TO NEXT CIRCUIT INSPECTION SHOWN ON PROBLEM SYMPTOMS TABLE**

NG

2	CHECK WIRE HARNESS OR CONNECTOR(ECM–STARTER RELAY)

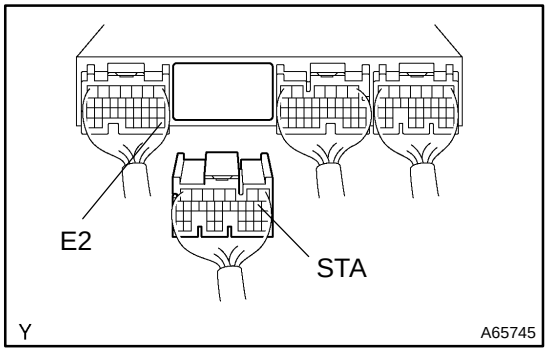

(a) Disconnect the ECM E4 connector.
(b) Remove the starter relay.
(c) Check continuity between the terminals STA of the ECM connector and 1 of the starter relay connector side.
Resistance: 1 Ω or less
(d) Check for short between the terminals STA of the ECM connector and E2 of the ECM connector.
Resistance: 1 MΩ or more

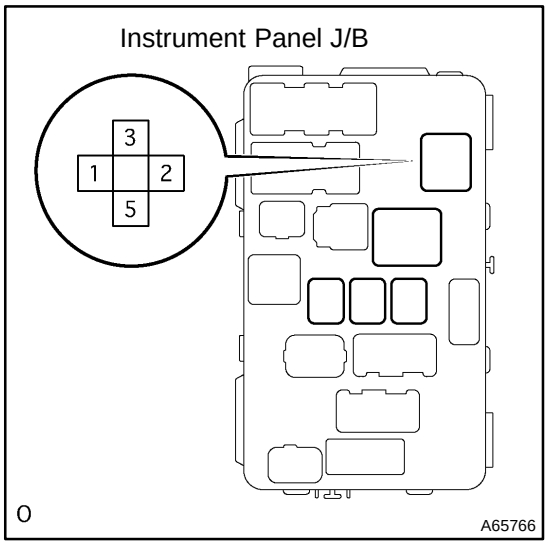

NG	REPAIR OR REPLACE WIRE HARNESS OR CONNECTOR

OK

CHECK AND REPLACE ECM

OBD II scan tool (excluding hand–held tester):

1	INSPECT ECM(CHECK VOLTAGE)

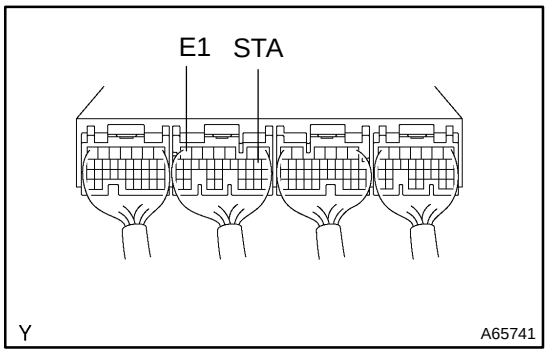

(a) Turn the ignition switch ON.
(b) Measure the voltage between terminal STA of the ECM connector and E1 of the ECM connector, during the engine cranking.
Voltage: 6 V or more

OK	PROCEED TO NEXT CIRCUIT INSPECTION SHOWN ON PROBLEM SYMPTOMS TABLE

NG

2	CHECK WIRE HARNESS OR CONNECTOR(ECM–STARTER RELAY)

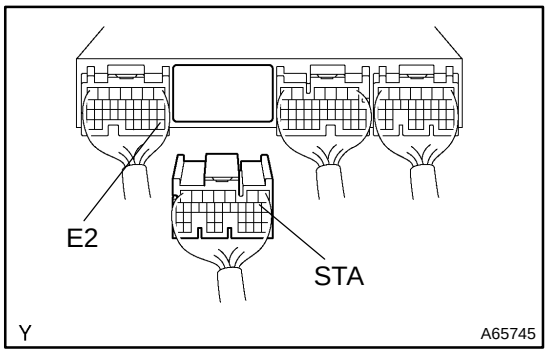

(a) Disconnect the ECM E4 connector.
(b) Remove the starter relay.
(c) Check continuity between the terminals STA of the ECM connector and 1 of the starter relay connector side.
Resistance: 1 Ω or less
(d) Check for short between the terminals STA of the ECM connector and E2 of the ECM connector.
Resistance: 1 MΩ or more

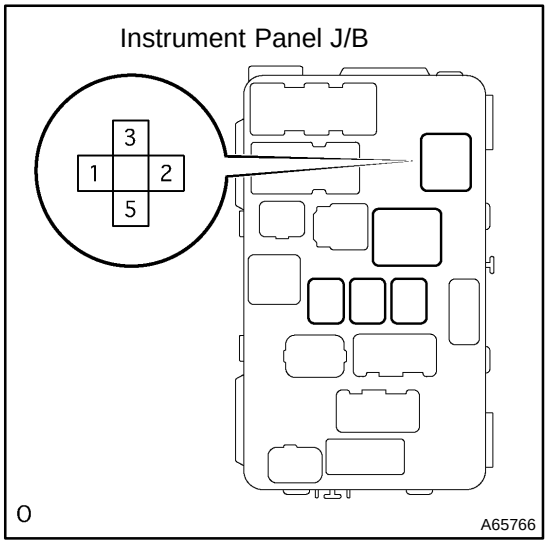

NG	REPAIR OR REPLACE WIRE HARNESS OR CONNECTOR

OK

CHECK AND REPLACE ECM

057HC–03

CUSTOMER PROBLEM ANALYSIS CHECK

ENGINE CONTROL SYSTEM Check Sheet

Inspector's Name _____

Customer's Name		Model and Model Year	
Driver's Name		Frame No.	
Data Vehicle Brought in		Engine Model	
License No.		Odometer Reading	km / miles

Problem Symptoms	☐ Engine does not Start	☐ Engine does not crank ☐ No initial combustion ☐ No complete combustion
	☐ Difficult to Start	☐ Engine cranks slowly ☐ Other _____
	☐ Poor Idling	☐ Incorrect first idle ☐ Idling rpm is abnormal ☐ High (rpm) ☐ Low (rpm) ☐ Rough idling ☐ Other _____
	☐ Poor Drivability	☐ Hesitation ☐ Back fire ☐ Muffler explosion (after–fire) ☐ Surging ☐ Knocking ☐ Other _____
	☐ Engine Stall	☐ Soon after starting ☐ After accelerator pedal depressed ☐ After accelerator pedal released ☐ During A/C operation ☐ Shifting from N to D ☐ Other _____
	☐ Others	

Datas Problem Occurred		
Problem Frequency		☐ Constant ☐ Sometimes (times per day/month) ☐ Once only ☐ Other _____
Condition When Problem Occurs	Weather	☐ Fine ☐ Cloudy ☐ Rainy ☐ Snowy ☐ Various/Other _____
	Outdoor Temperature	☐ Hot ☐ Warm ☐ Cool ☐ Cold (approx. ____˚F/____˚C)
	Place	☐ Highway ☐ Suburbs ☐ Inner City ☐ Uphill ☐ Downhill ☐ Rough road ☐ Other _____
	Engine Temp.	☐ Cold ☐ Warming up ☐ After Warming up ☐ Any temp. ☐ Other _____
	Engine Operation	☐ Starting ☐ Just after starting (min.) ☐ Idling ☐ Racing ☐ Driving ☐ Constant speed ☐ Acceleration ☐ Deceleration ☐ A/C switch ON/OFF ☐ Other _____

Condition of check engine warning light (CHK ENG)		☐ Remains on ☐ Sometimes light up ☐ Does not light up
DTC Inspection	Normal mode (Precheck)	☐ Normal ☐ Malfunction code(s) (code) ☐ Freezed frame data ( )
	Check Mode	☐ Normal ☐ Malfunction code(s) (code) ☐ Freezed frame data ( )

057HE–03

DIAGNOSTIC TROUBLE CODE CHART

HINT:

Parameters listed in the chart may not be exactly the same as your reading due to the type of instrument or other factors.

If a malfunction code is displayed during the DTC check in the check mode, check the circuit for the codes listed in the table below. For details of each code, turn to the page referred to under the ”See page” for the respective ”DTC No.” in the DTC chart.

DTC No. (See page)	Detection Item	Trouble Area	MIL *1	Memory
P0100 (05–177)	Mass Air Flow Circuit Malfunction	• Open or short in air flow meter circuit • Air flow meter • ECM	○	○
P0101 (05–182)	Mass Air Flow Circuit Range/ Performance Problem	• ECM	○	○
P0110 (05–183)	Intake Air Temp. Circuit Malfunction	• Open or short in intake air temp. sensor circuit • Intake air temp. sensor (built into air flow meter) • ECM	○	○
P0115 (05–186)	Engine Coolant Temp. Circuit Malfunction	• Open or short in water temp. sensor circuit • Water temp. sensor • ECM	○	○
P0116 (05–189)	Engine Coolant Temp. Circuit Range/Performance Problem	• Water temp. sensor • Cooling system • Thermostat	○	○
P0120 (05–190)	Throttle / Pedal Position Sensor / Switch ”A” Circuit Malfunction	• Open or short in throttle position sensor circuit • Throttle position sensor • ECM	○	○
P0121 (05–195)	Throttle / Pedal Position Sensor / Switch ”A” Circuit Range / Performance Problem.	• Throttle position sensor	○	○
P0125 (05–196)	Insufficient Coolant Temp. for Closed Loop Fuel Control	• PCV hose • Open or short in oxygen sensor circuit • Oxygen sensor • Air induction system • Fuel pressure • Injector • Gas leakage on exhaust system • ECM	○	○
P0128 (05–201)	Thermostat Malfunction	• Thermostat • Cooling system • Engine coolant temperature sensor • ECM	○	○
P0130 (05–203)	Heated Oxygen Sensor Circuit Malfunction (Bank 1 Sensor 1)	• Open or short in oxygen sensor circuit • Oxygen sensor • Air induction system • Fuel pressure • Injector • ECM	○	○
P0133 (05–208)	Heated Oxygen Sensor Slow Response (Bank 1 Sensor 1)	• Open or short in oxygen sensor circuit • Oxygen sensor • Air induction system • Fuel pressure • Injector • ECM	○	○

P0135 (05–212)	Heated Oxygen Sensor Heater Circuit Malfunction (Bank 1 Sensor 1)	• Open or short in heater circuit of oxygen sensor • Oxygen sensor heater • ECM	○	○
P0136 (05–203)	Heated Oxygen Sensor Circuit Malfunction (Bank 1 Sensor 2)	• Open or short in oxygen sensor circuit • Oxygen sensor	○	○
P0141 (05–212)	Heated Oxygen Sensor Heater Circuit Malfunction (Bank 1 Sensor 2)	• Open or short in heater circuit of oxygen sensor • Oxygen sensor heater • ECM	○	○
P0171 (05–216)	System too Lean (Fuel Trim) (Bank 1)	• Air induction system • PCV hose • Injector blockage • Mass air flow meter • Engine coolant temp. sensor • Fuel pressure • Gas leakage on exhaust system • Open or short in oxygen sensor circuit • Oxygen sensor • ECM	○	○
P0172 (05–216)	System too Rich (Fuel Trim) (Bank 1)	• Injector leak, blockage • Mass air flow meter • Engine coolant temp. sensor • Ignition system • Fuel pressure • Gas leakage on exhaust system • Open or short in oxygen sensor circuit • Gas leakage on exhaust system • Oxygen sensor • ECM	○	○
P0300 (05–220)	Random/Multiple Cylinder Misfire Detected	• Open or short in engine wire • Connector connection • Vacuum hose connection • PCV hose • Ignition system • Injector • Fuel pressure • Mass air flow meter • Engine coolant temp. sensor • Compression pressure • Valve clearance • Valve timing • VVTL system • ECM	○	○
P0301 (05–220)	Cylinder 1 Misfire Detected			
P0302 (05–220)	Cylinder 2 Misfire Detected			
P0303 (05–220)	Cylinder 3 Misfire Detected			
P0304 (05–220)	Cylinder 4 Misfire Detected			
P0325 (05–225)	Knock Sensor 1 Circuit Malfunction (Bank 1)	• Open or short in knock sensor circuit • Knock sensor (looseness) • ECM	○	○
P0335 (05–228)	Crankshaft Position Sensor ”A” Circuit Malfunction	• Open or short in crankshaft position sensor circuit • Crankshaft position sensor • Crank angle sensor plate • ECM	○	○
P0340 (05–231)	Camshaft Position Sensor Circuit Malfunction	• Open or short in camshaft position sensor circuit • Camshaft position sensor • Intake camshaft • ECM	○	○
P0420 (05–233)	Catalyst System Efficiency Below Threshold (Bank 1)	• Gas leakage on exhaust system • Oxygen sensor • Three–way catalytic converter	○	○

P0440 (05–236)	Evaporative Emission Control System Malfunction	• Hose or tube cracked, hole, damaged or loose seal • Fuel tank cap incorrectly installed • Fuel tank cap cracked or damaged • Vacuum hose cracked, hole, clocked, damaged or disconnected • Fuel tank cracked, hole or damaged • Charcoal canister cracked, hole or damaged • Open or short in vapor pressure sensor circuit • Vapor pressure sensor • Fuel tank over fill check valve cracked or damaged • ECM	○	○
P0441 (05–245)	Evaporative Emission Control System Incorrect Purge Flow	• Vacuum hose cracked, hole, blocked damaged or disconnected • Fuel tank cap incorrectly installed • Fuel tack cap cracked or damaged • Open or short in vapor pressure sensor circuit • Vapor pressure sensor • Open or short in VSV circuit for EVAP • VSV for CCV • Open or short in VSV circuit for vapor pressure sensor • VSV for vapor pressure sensor • Charcoal canister cracked, hole or damaged • Fuel tack over full check valve cracked or damaged • ECM	○	○
P0442 (05–236)	Evaporative Emission Control System Malfunction	• Same as DTC No. P0440	○	○
P0446 (05–236)	Evaporative Emission Control System Malfunction	• Same as DTC No. P0441	○	○
P0450 (05–260)	Evaporative Emission Control System Pressure Sensor Malfunction	• Open or short in vapor pressure sensor circuit • Vapor pressure sensor • ECM	○	○
P0451 (05–260)	Evaporative Emission Control System Pressure Sensor Range / Performance	• Open or short in vapor pressure sensor circuit • Vapor pressure sensor • ECM	○	○
P0500 (05–262)	Vehicle Speed Sensor Malfunction	• Combination meter • Open or short in vehicle speed sensor circuit • Vehicle speed sensor • ECM	○	○
P0505 (05–264)	Idle Control System Malfunction	• Open or short in ISC valve circuit • PCV hose • ISC valve is stick or closed*2 • A/C switch circuit • Air induction system*2 • ECM	○	○
P1300 (05–267)	Igniter Circuit Malfunction (No. 1)	• Ignition system • Open or short in IGF or IGT1 circuit from No. 1 ignition coil with igniter to ECM • No. 1 ignition coil with igniter • ECM	○	○
P1305 (05–267)	Igniter Circuit Malfunction (No. 2)	• Ignition system • Open or short in IGF or IGT2 circuit from No. 2 ignition coil with igniter to ECM • No. 2 ignition coil with igniter • ECM	○	○

P1310 (05–267)	Igniter Circuit Malfunction (No. 3)	• Ignition system • Open or short in IGF or IGT3 circuit from No. 3 ignition coil with igniter to ECM • No. 3 ignition coil with igniter • ECM	○	○
P1315 (05–267)	Igniter Circuit Malfunction (No. 4)	• Ignition system • Open or short in IGF or IGT4 circuit from No. 4 ignition coil with igniter to ECM • No. 4 ignition coil with igniter • ECM	○	○
P1335 (05–273)	Crankshaft Position Sensor Circuit Malfunction (During engine running)	• Open or short in crankshaft position sensor circuit • Crankshaft position sensor • Crank angle sensor plate • ECM	–	○
P1346 (05–274)	VVT Sensor/Camshaft Position Sensor Circuit Range/Performance Problem (Bank 1)	• Mechanical system (Jumping teeth of timing chain, chain stretched) • ECM	○	○
P1349 (05–275)	VVT System Malfunction (Bank 1)	• Valve timing • OCV • VVT controller assembly • ECM	○*2	○
P1520*2 (05–280)	Stop Light Switch Circuit Malfunction	• Open or short in stop light switch signal circuit • Stop light switch • ECM	○	○
P1600 (05–284)	Back–Up Power Source Circuit Malfunction	• Open in back up power source circuit • ECM	○	○
P1656 (05–287)	OCV Circuit Malfunction (Bank 1)	• Open or short in OCV circuit • OCV • ECM	○	○
P1690 (05–290)	OCV for VVTL circuit Malfunction	• Open or short in OCV circuit • OCV for VVTL • ECM	○	○
P1692 (05–294)	OCV for VVTL Open Malfunction (Bank 1)	• Open or short in OCV circuit • OCV for VVTL • Oil pressure switch for VVTL • ECM	○	○
P1693 (05–294)	OCV for VVTL Close Malfunction (Bank 1)	• Same as DTC No. P1692	○	○
P1780*2 (05–298)	Park / Neutral Position Switch Malfunction	• Short in neutral start switch circuit • Neutral start switch • ECM	○	○

*1: ○ ... MIL light up.
*2: Only for A/T models.

SFI SYSTEM (2ZZ–GE)

057HB–03

HOW TO PROCEED WITH TROUBLESHOOTING

1	VEHICLE BROUGHT TO WORKSHOP

2	CUSTOMER PROBLEM ANALYSIS (See page 05–156)

3	CONNECT THE HAND–HELD TESTER TO DLC3

HINT:
If the display indicates a communication fault in the tool, inspect DLC3.

4	CHECK DTC AND FREEZED FRAME DATA (See page 05–157)

HINT:
Record or print DTC and Freezed Frame Data, if needed.

5	CLEAR DTC AND FREEZED FRAME DATA (See page 05–157)

6	VISUAL INSPECTION

7	SETTING THE CHECK (TEST) MODE DIAGNOSIS (See page 05–157)

8	PROBLEM SYMPTOM CONFIRMATION

HINT:
If the engine does not start, perform step 10 and 12 first.

A	Malfunction does not occur
B	Malfunction occurs

B → GO TO STEP 10

A

9	SYMPTOM SIMULATION

10	DTC CHECK (See page 05–157)

A	Malfunction code
B	No code

B → GO TO STEP 12

A

11	DTC CHART (See page 05–157)

GO TO STEP 14

12	BASIC INSPECTION (See page 05–157)

A	Not confirm wrong parts
B	Confirm wrong parts

B → GO TO STEP 17

A

13	PROBLEM SYMPTOMS TABLE (See page 05–175)

A	Confirm wrong circuit
B	Confirm wrong Parts

B → GO TO STEP 17

A

14	CHECK ECM POWER SOURCE CIRCUIT (See page 05–308)

15	CIRCUIT INSPECTION

A	Not confirm malfunction
B	Confirm malfunction

B → GO TO STEP 18

A

16	CHECK FOR INTERMITTENT PROBLEMS (See page 05–157)

GO TO STEP 18

17	PARTS INSPECTION

18	IDENTIFICATION OF PROBLEM

19	ADJUSTMENT, REPAIR

20	CONFIRMATION TEST

END

057HF–03

LOCATION

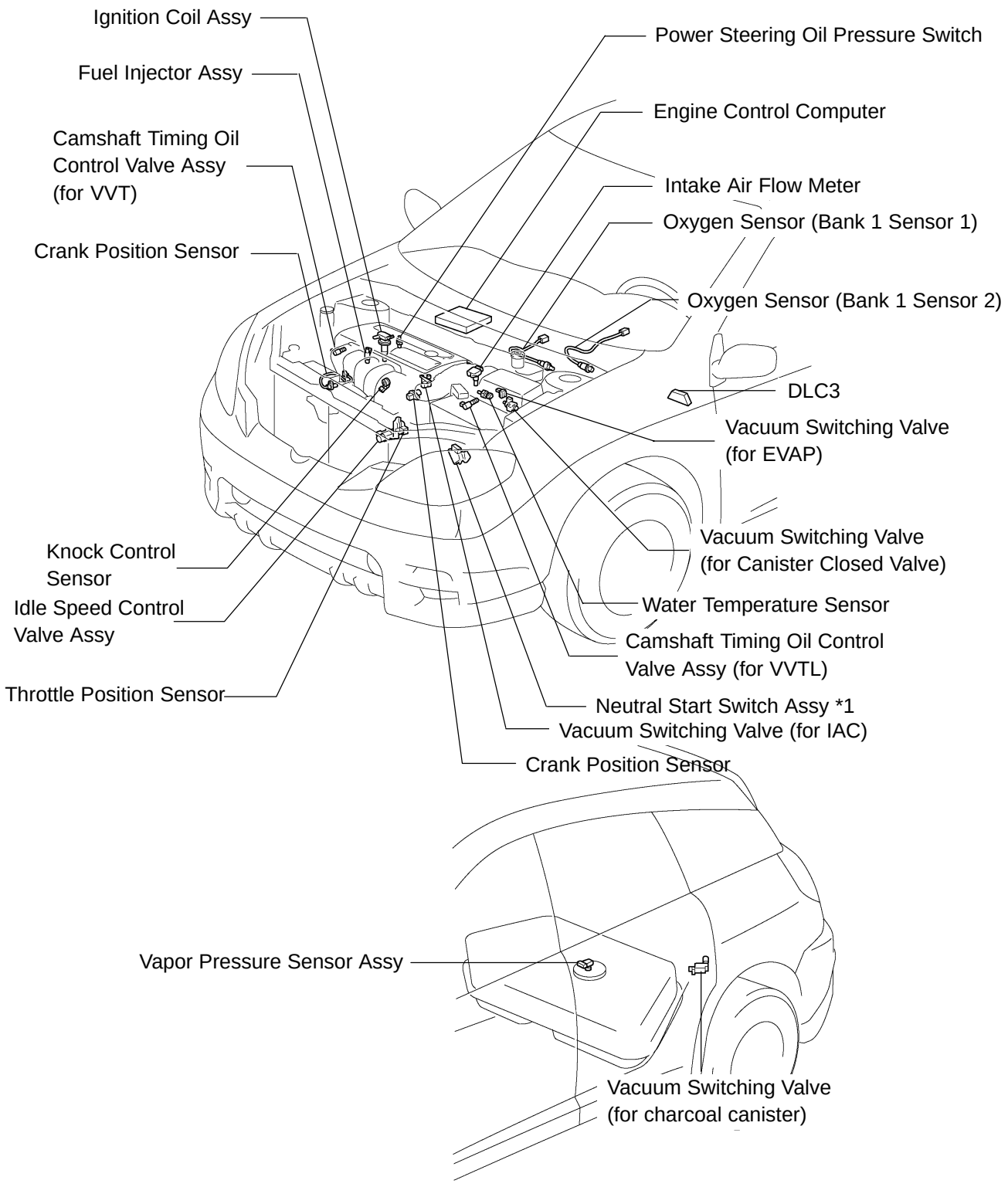

*1: Only for A/T

A66527

PRE–CHECK

1. DIAGNOSIS SYSTEM

(a) Description

- When troubleshooting OBD II vehicles, the only difference from the usual troubleshooting procedure is that you need to connect the vehicle to the OBD II scan tool complying with SAE J1978 or hand–held tester, and read off various data output from the vehicle's ECM.
- OBD II regulations require that the vehicle's on–board computer lights up the Malfunction Indicator Light (MIL) on the instrument panel when the computer detects a malfunction in the emission control system/components or in the powertrain control components which affect vehicle emissions, or a malfunction in the computer. In addition to the MIL lighting up when a malfunction is detected, the applicable Diagnostic Trouble Code (DTC) prescribed by SAE J2012 is recorded in the ECM memory (See page 05–168).

If the malfunction does not reoccur in 3 consecutive trips, the MIL goes off automatically but the DTCs remain in the ECM memory.

- To check the DTCs, connect the OBD II scan tool or hand–held tester to the Data Link Connector 3 (DLC3) on the vehicle. The OBD II scan tool or hand–held tester also enables you to erase the DTCs and check freeze frame data and various forms of engine data (For operating instructions, see the OBD II scan tool's instruction book.). DTCs include SAE controlled codes and manufacturer controlled codes. SAE controlled codes must be set as prescribed by the SAE, while manufacturer controlled codes can be set freely by the manufacturer within the prescribed limits (See DTC chart on page 05–168).
- The diagnosis system operates in the normal mode during the normal vehicle use. It also has a check mode for technicians to simulate malfunction symptoms and troubleshoot. Most DTCs use 2 trip detection logic* to prevent erroneous detection, which ensures the malfunction detection. By switching the ECM to the check mode when troubleshooting, the technician can cause the MIL to light up for a malfunction that is only detected once or momentarily (hand–held tester only) (See step 2).

- *2 trip detection logic:
  When a malfunction is first detected, the malfunction is temporarily stored in the ECM memory (1st trip).

If the same malfunction is detected again during the second drive test, this second detection causes the MIL to light up (2nd trip). (however, the ignition switch must be turned OFF between the 1st 2 trip and 2nd 2 trip.).

- Freeze frame data:
  Freeze frame data records the engine condition when a misfire (DTC P0300 – P0304) or fuel trim malfunction (DTC P0171 and P0172) or other malfunction (first malfunction only), is detected. Freeze frame data records the engine conditions (fuel system, calculated load, engine coolant temperature, fuel trim, engine speed, vehicle speed, etc.) when a malfunction is detected. When troubleshooting, it is useful for determining whether the vehicle was running or stopped, the engine was warmed up or not, the air–fuel ratio was lean or rich, etc. at the time of the malfunction.

- Priorities for troubleshooting:
  If troubleshooting priorities for multiple DTCs are given in the applicable DTC chart, these should be followed.
  If no instructions are given, troubleshoot the DTCs according to the following priorities.
  (1) DTCs other than fuel trim malfunction (DTCs P0171 and P0172) and misfire (DTCs P0300 – P0304).
  (2) Fuel trim malfunction (DTCs P0171 and P0172).
  (3) Misfire (DTCs P0300 – P0304).

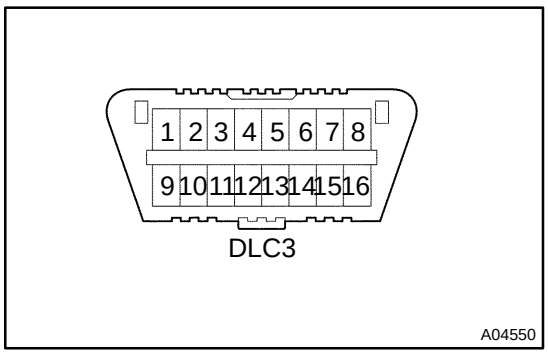

(b) Check the DLC3.
The vehicle's ECM uses ISO 9141–2 for communication. The terminal arrangement of DLC3 complies with SAE J1962 and matches the ISO 9141–2 format.

Terminal No	Connection/Voltage or Resistance	Condition
7	Bus + Line/Pulse generation	During transmission
4	Chassis Ground – Body Ground/1 Ω or less	Always
5	Signal Ground – Body Ground/1 Ω or less	Always
16	Battery Positive – Body Ground/9 – 14 V	Always

HINT:
If your display shows UNABLE TO CONNECT TO VEHICLE when you have connected the cable of the OBD II scan tool or hand–held tester to the DLC3, turned the ignition switch ON and operated the scan tool, there is a problem on the vehicle side or tool side.

- If the communication is normal when the tool is connected to another vehicle, inspect the DLC3 on the original vehicle.
- If the communication is still impossible when the tool is connected to another vehicle, the problem is probably in the tool itself, so consult the Service Department listed in the tool's instruction manual.

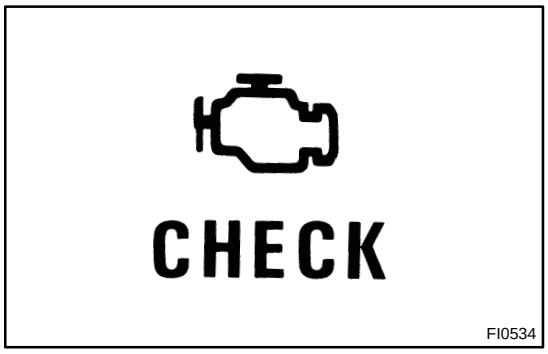

2. Normal Mode:
INSPECT DIAGNOSIS

(a) Check the MIL.
(1) The MIL comes on when the ignition switch is turned ON and the engine is not running.

HINT:
If the MIL does not light up, troubleshoot the combination meter (See page 05–168).

(2) When the engine starts, the MIL should go off. If the lamp remains on, it means the diagnosis system has detected a malfunction or abnormality in the system.

(b) Check the DTC.

NOTICE:

- **If there is no DTC in the normal mode, check the 1st trip DTC using Continuous Test Results function (Mode 7 for SAE J1979) on the OBD II scan tool or hand–held tester.**
- **Hand–held tester only:**
  When the diagnosis system is switched from the normal mode to the check mode, all the DTCs and freeze frame data recorded in the normal mode will be erased. So before switching modes, always check the DTCs and freeze frame data, and note them down.
  (1) Prepare the OBD II scan tool (complying with SAE J1978) or hand–held tester.
  (2) Connect the OBD II scan tool or hand–held tester to the DLC3.
  (3) Turn the ignition switch ON, and push the OBD II scan tool or hand–held tester switch ON.

(4) Use the OBD II scan tool or hand–held tester to check the DTCs and freeze frame data and note them down (For operating instructions, see the OBD II scan tool's instruction book).

If there is no DTC in the normal mode, check the 1st trip DTC using Continuous Test Results function (Mode 7 for SAE J1979) on the OBD II scan tool or hand–held tester.

(5) See page 05–168 to confirm the details of the DTCs.

NOTICE:

- **When simulating symptoms with an OBD II scan tool (excluding hand–held tester) to check the DTCs, use the normal mode. For code on the DTC chart subject to "2 trip detection logic", perform the following either action.**
- **Turn the ignition switch OFF after the symptom is simulated the once. Then repeat the simulation process again. When the problem has been simulated twice, the MIL lights up and the DTCs are recorded in the ECM.**
- **Check the 1st trip DTC using Mode 7 (Continuous Test Results) for SAE J1979.**

(c) Clear the DTC.

The DTC and freeze frame data will be erased by either action.

(1) Operating the OBD II scan tool (complying with SAE J1978) or hand–held tester to erase the codes (For operating instructions, see the OBD II scan tool's instruction book).

(2) Disconnecting the battery terminals or E.F.I.1 fuse.

NOTICE:

If the hand–held tester switches the ECM from the normal mode to the check mode or viseversa, or if the ignition switch is turned from ON to ACC or OFF during the check mode, the DTCs and freeze frame data will be erased.

3. Check Mode:

INSPECT DIAGNOSIS

HINT:

Hand–held tester only:

Compared to the normal mode, the check mode has an increased sensitivity to detect malfunctions. Furthermore, the same diagnostic items as ones detected in the normal mode can also be detected in the check mode.

(a) Check the DTC.

(1) Initial conditions

- Battery positive voltage 11V or more
- Throttle valve fully closed
- Transmission in neutral position
- A/C switched OFF

(2) Turn the ignition switch OFF.

(3) Prepare the hand–held tester.
(4) Connect the hand–held tester to the DLC3.
(5) Turn the ignition switch ON and push the hand–held tester switch ON.

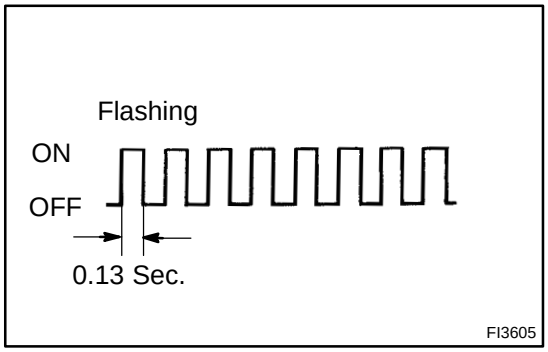

(6) Switch the hand–held tester from the normal mode to the check mode.
(7) Check if the MIL blinks.

NOTICE:
If the hand–held tester switches the ECM from the normal mode to the check mode or vise–versa, or if the ignition switch is turned from ON to ACC or LOCK during the check mode, the DTCs and freeze frame data will be erased.

(8) Start the engine (The MIL goes off after the engine starts).
(9) Simulate the conditions of the malfunction described by the customer.

NOTICE:
Leave the ignition switch ON until you have checked the DTC, etc.

(10) After simulating the malfunction conditions, use the hand–held tester diagnosis selector to check the DTCs and freeze frame data, etc.

HINT:
Take care not to turn the ignition switch OFF. Turning the ignition switch OFF switches the diagnosis system from the check mode to the normal mode. So all the DTCs, etc. will be erased.

(11) After checking the DTC, inspect the applicable circuit.

4. FAIL–SAFE CHART

If any of the following codes is recorded, the ECM enters fail–safe mode.

DTC No.	Fail–safe Operation	Fail–safe Deactivation Conditions
P0100	Ignition timing fixed at 10˚BTDC	Returned to normal condition
P0110	Intake air temperature is fixed at 20˚C (68˚F)	Returned to normal condition
P0115	Engine coolant temperature is fixed at 80˚(176˚F)	Returned to normal condition
P0120	VTA is fixed at 0˚	The following condition must be repeated at least 2 times consecutively when closed throttle position switch is OFF: VTA ≧ 0.1 V and ≦ 0.95 V
P0135 P0141	The heater circuit in witch an abnormality is detected is turned off	Ignition switch OFF
P0325	Max. timing retardation	Ignition switch OFF
P1300 P1305 P1310 P1315	Fuel cut	Returned to normal condition
P1656	It cut electrically the circuit in which an abnormality is detected.	Returned to normal condition

5. CHECK FOR INTERMITTENT PROBLEMS

Hand–held tester only:

By putting the vehicle's ECM in the check mode, 1 trip detection logic is possible instead of 2 trip detection logic and the sensitivity to detect open circuits is increased. This makes it easier to detect intermittent problems.

(1) Clear the DTC (See step 2).
(2) Set the check mode (See step 3).
(3) Perform a simulation test (See page 01–24).
(4) Check the connector and terminal (See page 01–34).
(5) Handle the connector (See page 01–34).

6. DATA LIST

HINT:

According to the DATA LIST displayed by the OBD II scan tool or Hand–held tester, you can read the value of the switch, sensor, actuator and so on without parts removal. Reading the DATA LIST as a first step of troubleshooting is one of the method to shorten the labor time.

(a) Warm up the engine.
(b) Turn the ignition switch OFF.
(c) Connect the OBD II scan tool or Hand–held tester to the DLC3.
(d) Turn the ignition switch ON.
(e) According to the display on tester, read the "DATA LIST".

Item	Measurement Item/Range (Display)	Normal Condition	Diagnostic Note
INJECTOR	Injection period of the No.1 cylinder/ Min.: 0 ms, Max.: 32.64 ms	Idling: 0.85 – 2.0 ms	
IGN ADVANCE	Ignition timing advance for No.1 cylinder/ Min.: –64 deg., Max.: 63.5 deg.	Idling: M/T BTDC 4 – 12 deg. A/T BTDC 10 – 18 deg.	
IAC DUTY RATIO	Duty ratio of the IAC valve/ Min.: 0 %, Max.: 99 %	• Idling: 25 – 45 % • Racing with out load(2500 rpm): 25 – 45 %	
CALC LOAD	Calculated load by engine ECM/ Min.: 0 %, Max.: 100 %	• Idling: 9.1 – 20.0 % • Racing without load(2500 rpm): 11.0 – 23.0 %	
MAF	Air flow rate from MAF sensor/ Min.: 0 gm/s, Max.: 655 gm/s	• Idling: M/T 1.5 – 5.0 gm/sec. A/T 1.5 – 5.0 gm/sec. • Racing without load (2,500 rpm): 5.0 – 15.0 gm/sec.	
ENGINE SPD	Engine Speed/ Min.: 0 rpm, Max.: 16383 rpm	Idling: M/T 750 – 850 rpm A/T 700 – 800 rpm	
COOLANT TEMP	Coolant temperature/ Min.: –40 °C, Max.: 140 °C	After warming up: 80 – 95°C (176 – 203°F)	If the value is "–40 °C" or "140 °C", sensor circuit is open or shorted.
INTAKE AIR	Intake air temperature/ Min.: –40 °C, Max.: 140 °C	Equivalent to Ambient Temp.	
THROTTLE POS	Absolute throttle position sensor/ Min.: 0 %, Max.: 100 %	• Throttle fully closed: 8 – 18 % • Throttle fully open: 64 – 98 %	
CTP SW	Closed throttle position switch/ ON or OFF	• Throttle fully closed: ON • Throttle open: OFF	
VEHICLE SPD	Vehicle speed/ Min.: 0 km/h, Max.: 255 km/h	Vehicle stopped: 0 km/h (0 mph)	

OS2 B1 S1	Oxygen sensor output voltage of the bank 1 sensor 1/ Min.: 0 V, Max.: 1.275 V	Idling: 0.1 – 0.9 V	
O2S B1 S2	Oxygen sensor output voltage of the bank 1 sensor 2/ Min.: 0 V, Max.: 1.275 V	Idling: 0.1 – 0.9 V	
VAPOR PRESS	Vapor pressure/ Min.: – 4.12 kPa, Max.: 2.125 kPa		
SHORT FT #1	Short term fuel trim of bank 1/ Min.: –100 %, Max.: 100%	0 ± 20 %	
LONG FT #1	Long term fuel trim of bank 1/ Min.: –100 %, Max.: 100 %	0 ± 20 %	
TOTAL FT #1	Total fuel trim of bank 1/ Min.: 0.5, Max.: 1.496	Idling: 0.5 – 1.4	
TOTAL FT #2	Total fuel trim of bank 2/ Min.: 0.5, Max.: 1.496	Idling: 0.5 – 1.4	
O2FT B1 S1	Short term fuel trim associated with the bank1, sensor1/ Min.: 100 %, Max.: 100 %		
O2FT B1 S2	Short term fuel trim associated with the bank1, sensor2/ Min.: –100 %, Max.: 100 %		
O2LR B1 S1	Response time of the O2 sensor, lean to rich (bank1, sensor1)/ Min.: 0 ms, Max.: 16711 ms		
O2LR B2 S1	Response time of the O2 sensor, lean to rich (bank2, sensor1)/ Min.: 0 ms, Max.: 16711 ms		
O2RL B1 S1	Response time of the O2 sensor, lean to rich/ (bank1, sensor1) Min.: 0 ms, Max.: 16711 ms		
O2RL B2 S1	Response time of the O2 sensor, lean to rich/ (bank2, sensor1) Min.: 0 ms, Max.: 16711 ms		
FUEL SYS #1, #2	Fuel system status (Bank1, 2) / OL or CL or OLDRIVE or OLFAULT or CLFAULT	Idling after warming up: CL	• OL: Open Loop–has not yet satisfied conditions to go closed loop. • CL: Closed Loop–using oxygen sensor(s) as feed back for fuel control. • OL DRIVE: Open loop due to driving conditions. (power enrichment, deceleration enleanment) • OL FAULT: Open loop due to detected system fault. • CL FAULT: Closed loop, but fault with at least one oxygen sensor may be using single oxygen sensor for fuel control.
FC IDL	Idle fuel cut / ON or OFF	Fuel cut operation: ON	
MIL	MIL status / ON or OFF	MIL ON: ON	

STARTER SIG	Starter signal / ON or OFF	Cranking: ON	
A/C SIG	A/C signal / ON or OFF	A/C ON: ON	
PNP SW [NSW]	Neutral position switch signal / ON or OFF	P or N position: ON	
ELECT LOAD SIG	Electrical load signal / ON or OFF	Defogger switch ON: ON	
STOP LIGHT SW *1	Stop light switch / ON or OFF	• Brake pedal depressed: ON • Brake pedal released: OFF	
PS OIL PRESS SW	Power steering signal / ON or OFF	Steering position is; center: OFF Except center:ON	
PS SIGNAL	Power steering signal/ ON or OFF	• After engine start: OFF • After steer the steering: ON	
FUEL PUMP / SPD	Fuel pump / speed status / ON/H or OFF/M,L	Idling: ON	
A/C MAG CLUTCH	A/C magnet clutch status / ON or OFF	A/C magnet clutch ON: ON	
EVAP VSV	VSV status for EVAP control / ON or OFF	VSV operating: ON	
VVT CTRL B1	VVT control status (Bank 1) / ON or OFF	VVT system operation: ON	
INT AIR CTL VSV *1	VSV status for intake air control/ ON or OFF		
IGNITION	Ignition counter/ Min.: 0, Max.: 400	0 – 400	
CYL #1, #2, #3, #4	Misfire ratio of the cylinder 1, 2, 3, 4/ Min.: 0 %, Max.: 50 %	0 %	
MIL ON RUN DIST	This parameter indicates the distance travelled while MIL/ Min.: 0 km, Max.: 65535 km	When there is no DTC: 0 km/h (0 mph)	

*1: Only for A/T models.

7. ACTIVE TEST

HINT:

Performing the ACTIVE TEST using the Hand–held tester allows the relay, VSV, actuator and so on to operate without parts removal. Performing the ACTIVE TEST as a first step of troubleshooting is one of the method to shorten the labor time.

It is possible to display the DATA LIST during the ACTIVE TEST.

(a) Warm up the engine.
(b) Turn the ignition switch OFF.
(c) Connect the OBD II scan tool or Hand–held tester to the DLC3.
(d) Turn the ignition switch ON.
(e) According to the display on tester, perform the ”ACTIVE TEST”.

Item	Test Details	Diagnostic Note
INJ VOL	[Test Details] Control the injection volume Min.: –12.5 %, Max.: 24.8 % [Vehicle Condition] Engine speed: 3000rpm or less.	
IAC DUTY RATIO	[Test Details] Control the IAC duty ratio Min.: 0 %, Max.: 90 % [Vehicle Condition] Vehicle speed: 0 km/h. Engine speed: Idling Battery voltage: 8.5V or more.	When Engine speed does not change, IAC system has some failure.
CAN CTRL VSV	[Test Details] Activate the VSV for canister control. ON or OFF	
TANK BYPASS VSV	[Test Details] Activate the VSV for tank bypass. ON or OFF	
EVAP VSV (ALONE)	[Test Details] Activate the VSV for EVAP control. ON or OFF	
A/C MAG CLUTCH	[Test Details] Control the A/C magnet clutch. ON or OFF	
FUEL PUMP / SPD	[Test Details] Control the fuel pump speed. ON or OFF	
VVT CTRL B1	[Test Details] Activate the VVT system (Bank 1). ON or OFF	• ON: Rough idle or engine stall. • OFF: Normal engine speed.
VVTL CTRL B1	[Test Details] Control the VVTL system (Bank 1). ON or OFF	
INT AIR CTL VSV	[Test Details] Activate the VSV for intake air control. ON or OFF	
TC/TE1	[Test Details] Connect the TC and TE1 ON or OFF	
FC IDL PROHBT	[Test Details] Control the idle fuel cut prohibit. ON or OFF	

BASIC INSPECTION

When the malfunction code is not confirmed in the DTC check, troubleshooting should be carried out in the order for all possible circuits to be considered as the causes of the problems. In many cases, by carrying out the basic engine check shown in the following flow chart, the location causing the problem can be found quickly and efficiently. Therefore, using of this check is essential in engine troubleshooting.

1	CHECK BATTERY VOLTAGE

NOTICE:
Carry out this check under the engine stoppage condition.

	OK	NG
Voltage	11V or more	Less than 11V

NO → **CHARGE OR REPLACE BATTERY**

OK

2	CHECK IF ENGINE IS CRANKED

NG → **PROCEED TO PROBLEM TABLE ON PAGE 05–175**

OK

3	CHECK IF ENGINE STARTS

NG → **GO TO STEP 7**

OK

4	CHECK AIR FILER

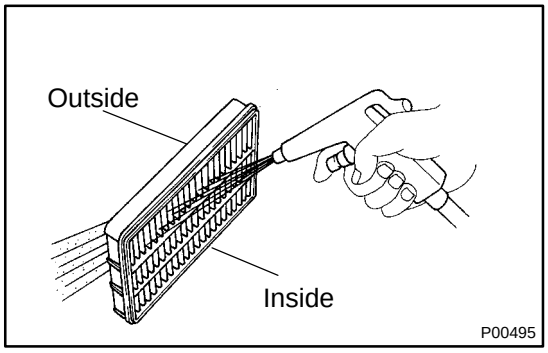

(a) Visually check that the air filter is not excessively dirty or oily.

HINT:
Visually check that the air filter is not excessively dirty or oily.

NOTICE:
If necessary, clean the filter with compressed air. First blow from inside thoroughly, then blow from outside of filter.

NG → **REPAIR OR REPLACE**

OK

5	CHECK IDLE SPEED (See page 14–174)

NG → PROCEED TO PROBLEM SYMPTOM TABLE ON PAGE 05–175

OK

6	CHECK IGNITION TIMIMG (See page 14–174)

NG → PROCEED TO PAGE 05–175 AND CONTINUE TO TROUBLESHOOT

OK

PROCEED TO PROBLEM SYMPTOM TABLE ON PAGE 05–175

7	CHECK FUEL PRESSURE (See page 11–5)

NG → PROCEED TO PAGE 05–175 AND CONTINUE TO TROUBLESHOOT

OK

8	CHECK FOR SPARK (See page 18–4)

NG → PROCEED TO PAGE 05–175 AND CONTINUE TO TROUBLESHOOT

OK

PROCEED TO PROBLEM SYMPTOMS TABLE ON PAGE 05–175

057HH–03

PROBLEM SYMPTOMS TABLE2zz

When the malfunction code is not confirmed in the diagnostic trouble code check and the problem still can not be confirmed in the basic inspection, proceed to this problem symptoms tables and troubleshoot according to the numbered order given below.

Symptom	Suspect Area	See page
Engine does not crank (Does not start)	1. Starter and starter relay 2. Neutral start switch circuit *	19–1 40–9
No initial combustion (Does not start)	1. ECM power source circuit 2. Ignition coil (w/ Igniter) circuit 3. Fuel pump control circuit 4. Injector	05–308 05–267 05–304 05–220
No complete combustion (Does not start)	1. Fuel pump control circuit 2. Ignition coil (w/ Igniter) circuit 3. Injector	05–304 05–267 05–220
Engine cranks normally (Difficult to start)	1. Starter signal circuit 2. ISC valve circuit 3. Fuel pump control circuit 4. Ignition coil (w/ Igniter) 5. Spark plug 6. Compression 7. Injector	05–299 05–264 05–304 05–267 18–5 14–174 05–220
Cold engine (Difficult to start)	1. Starter signal circuit 2. ISC valve circuit 3. Fuel pump control circuit 4. Injector 5. Ignition coil (w/ Igniter) 6. Spark plug	05–299 05–264 05–304 05–220 05–267 18–5
Hot engine (Difficult to start)	1. Starter signal circuit 2. ISC valve circuit 3. Fuel pump control circuit 4. Injector 5. Ignition coil (w/ Igniter) 6. Spark plug	05–299 05–264 05–304 05–220 05–267 18–5
Incorrect first idle (Poor idling)	1. ISC valve circuit	05–264
High engine idle speed (Poor idling)	1. ISC valve circuit 2. ECM power source circuit 3. Neutral start switch circuit * 4. Back up power source circuit	05–264 05–308 40–9 05–284
Low engine idle speed (Poor idling)	1. ISC valve circuit 2. Neutral start switch circuit * 3. Fuel pump control circuit 4. Injector 5. Back up power source circuit	05–264 40–9 05–304 05–220 05–284
Rough idling (Poor idling)	1. ISC valve circuit 2. Injector 3. Ignition coil (w/ Igniter) circuit 4. Compression 5. Fuel pump control circuit 6. Back up power source circuit	05–264 05–220 05–267 14–174 05–304 05–284
Hunting (Poor idling)	1. ISC valve circuit 2. ECM power source circuit 3. Fuel pump control circuit	05–264 05–308 05–304
Hesitation/Poor acceleration (Poor drivability)	1. Injector 2. Fuel pump control circuit 3. Ignition coil (w/ Igniter) circuit 4. A/T faulty *	05–220 05–304 05–267 05–440

Muffler explosion, after fire (Poor drivability)	1. Ignition coil (w/ Igniter) 2. Spark plug 3. Injector	05–267 18–5 05–220
Surging (Poor drivability)	1. Fuel pump control circuit 2. Spark plug 3. Injector	05–304 18–5 05–220
Engine stall (Soon after starting)	1. Fuel pump control circuit 2. ISC valve circuit	05–304 05–264
Engine stall (After accelerator pedal released)	1. Injector 2. ISC valve circuit 3. ECM	05–220 05–264 01–34
Engine stall (When shifting N to D)	1. Neutral start switch circuit * 2. ISC valve circuit	40–9 05–264

* A/T only

057HG–03

TERMINALS OF ECM

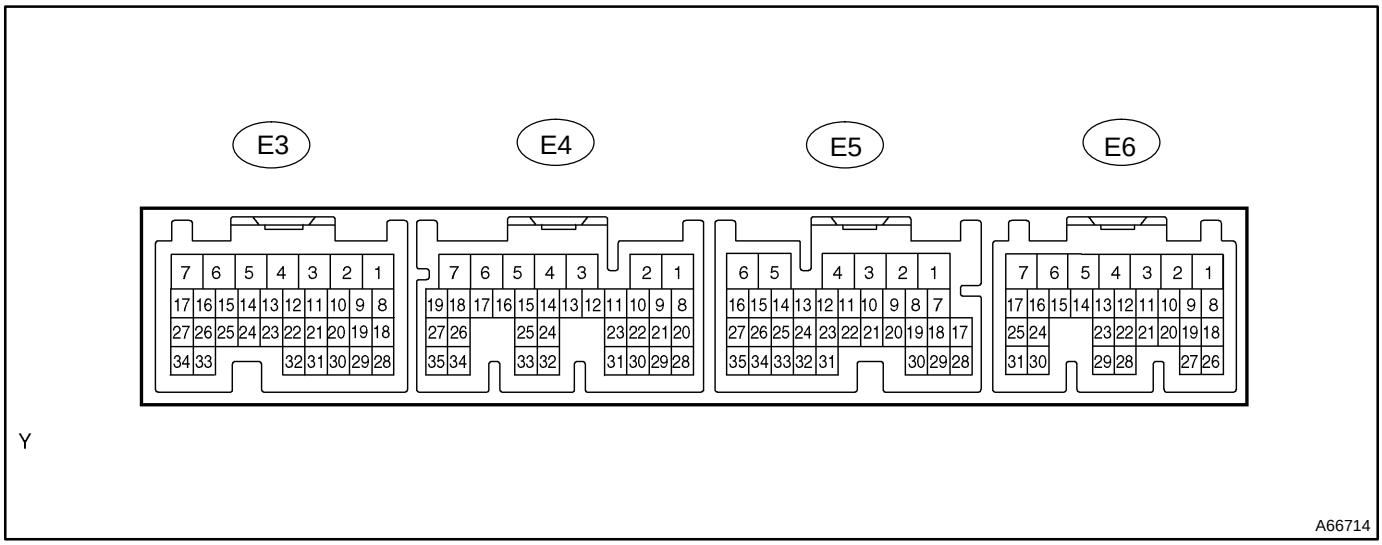

Symbols (Terminals No.)	Wiring Color	Condition	STD Voltage (V)
BATT (E6 – 3) – E1 (E4 – 7)	R–W ⇔ BR	Always	8 – 14
FC (E6 – 10) – E1 (E4 – 7)	G–R ⇔ BR	IG switch ON	8 – 14
FC (E6 – 10) – E1 (E4 – 7)	G–R ⇔ BR	Idling	Below 1.5
PTNK (E6 – 21) – E2 (E3 – 28)	L ⇔ BR	IG switch ON, fuel cap taken off	2.9 – 3.7
W (E6 – 11) – E1 (E4 – 7)	R–Y ⇔ BR	Idling	8 – 14
W (E6 – 11) – E1 (E4 – 7)	R–Y ⇔ BR	IG switch ON	Below 3.5
+B (E6 – 1) – E1 (E4 – 7)	B ⇔ BR	IG switch ON	8 – 14
STP*1 (E5 – 19) – E1 (E4 – 7)	G–W ⇔ BR	IG switch ON, brake pedal depressed	8 – 14
STP*1 (E5 – 19) – E1 (E4 – 7)	G–W ⇔ BR	IG switch ON, brake pedal released	Below 1.5
F/PS (E6 – 14) – E1 (E4 – 7)	Y ⇔ BR	IG switch ON	Pulse generation
STA (E4 – 9) – E1 (E4 – 7)	B ⇔ BR	Cranking	5.5 or more
HT1B (E5 – 4) – E03 (E4 – 5)	P–B ⇔ W–B	Idling	Below 3.0
HT1B (E5 – 4) – E03 (E4 – 5)	P–B ⇔ W–B	IG switch ON	9 – 14
PSW (E4 – 29) – E1 (E4 – 7)	L–R ⇔ BR	IG switch ON	8 – 14
MREL (E6 – 8) – E1 (E4 – 7)	B–W ⇔ BR	IG switch ON	8 – 14
SPD (E5 – 17) – E1 (E4 – 7)	V–W ⇔ BR	IG switch ON, rotate driving wheel slowly	Pulse generation
OX1B (E4 – 21) – E1 (E4 – 7)	W ⇔ BR	Maintain engine speed at 2,500 rpm for 2 min. after warning up	Pulse generation (See page 05–196)
TACH (E6 – 5) – E1 (E4 – 7)	B ⇔ BR	Idling	Pulse generation
VC (E3 – 18) – E2 (E3 – 28)	Y ⇔ BR	IG switch ON	4.5 – 5.5
HT1A (E4 – 4) – E03 (E4 – 5)	P ⇔ BR	Idling	Below 3.0
HT1A (E4 – 4) – E03 (E4 – 5)	P ⇔ BR	IG switch ON	9 – 14
EVP (E3 – 12) – E01 (E3 – 7)	L–B ⇔ W–B	IG switch ON	8 – 14
OVL+ (E3 – 25) – OVL– (E3 – 24)	B ⇔ L–Y	Engine speed at 6000 rpm or more	9 – 14
VG (E4 – 24) – EVG (E4 – 32)	G ⇔ L–W	Idling, A/C switch OFF	1.1 – 1.5
OX1A (E4 – 23) – E1 (E4 – 7)	R ⇔ BR	Maintain engine speed at 2,500 rpm for 2 min. after warning up	Pulse generation (See page 05–196)
NSW*1 (E4 –8) – E1 (E4 – 7)	R ⇔ BR	IG switch ON Other shift position in P or N position	8 – 14
NSW*1 (E4 –8) – E1 (E4 – 7)	R ⇔ BR	IG switch ON Shift position in P or N position	Below 1.5
THW (E3 – 19) – E2 (E3 – 28)	W ⇔ BR	Idling, Engine coolant temp. at 80˚C (176˚F)	0.2 – 1.0
G22+ (E3 – 26) – NE– (E3 – 34)	B ⇔ W	Idling	Pulse generation (See page 05–228)

NE+ (E3 – 27) – NE– (E3 – 34)	B ⇔ W	Idling	Pulse generation (See page 05–228)
THA (E3 – 20) – E2 (E3 – 28)	Y–B ⇔ BR	Idling, intake air temp. 20 ˚C (68 ˚F)	0.5 – 3.4
VTA (E3 – 21) – E2 (E3 – 28)	LG ⇔ BR	IG switch ON, throttle valve fully closed	0.3 – 1.0
VTA (E3 – 21) – E2 (E3 – 28)	LG ⇔ BR	IG switch ON, throttle valve fully open	3.2 – 4.9
#10 (E3 – 1) – E01 (E3 – 7)	Y ⇔ W–B	IG switch ON	8 – 14
#20 (E3 – 2) – E01 (E3 – 7)	B ⇔ W–B	IG switch ON	8 – 14
#30 (E3 – 3) – E01 (E3 – 7)	W ⇔ W–B	IG switch ON	8 – 14
#40 (E3 – 4) – E01 (E3 – 7)	L ⇔ W–B	IG switch ON	8 – 14
IGT1 (E3 – 8) – E1 (E4 – 7)	R–L ⇔ BR	Idling	Pulse generation (See page 05–267)
IGT2 (E3 – 9) – E1 (E4 – 7)	Y–G ⇔ BR	Idling	Pulse generation (See page 05–267)
IGT3 (E3 – 10) – E1 (E4 – 7)	GR ⇔ BR	Idling	Pulse generation (See page 05–267)
IGT4 (E3 – 11) – E1 (E4 – 7)	W ⇔ BR	Idling	Pulse generation (See page 05–267)
IGF (E3 – 23) – E1 (E4 – 7)	L–Y ⇔ BR	IG switch ON	4.5 – 5.5
IGF (E3 – 23) – E1 (E4 – 7)	L–Y ⇔ BR	Idling	Pulse generation (See page 05–267)
RSO (E3 – 5) – E01 (E3 – 7)	B–L ⇔ W–B	IG switch ON	9 – 14
OCV+ (E3 – 15) – OCV– (E3 – 14)	Y ⇔ B–Y	IG switch ON	Pulse generation (See page 05–275)
CCV (E5 – 1) – E01 (E3 – 7)	L ⇔ W–B	IG switch ON	9 – 14
KNK1 (E4 – 1) – EKNK (E4 – 2)	B ⇔ W	Idling	Pulse generation (See page 05–225)
ELS (E6 – 12) – E1 (E4 – 7)	G ⇔ BR	Light switch ON	9 – 14
ELS (E6 – 12) – E1 (E4 – 7)	G ⇔ BR	Light switch OFF	Below 3.0
ELS2 (E6 – 13) – E1 (E4 – 7)	W ⇔ BR	Defoger switch ON	9 – 14
ELS2 (E6 – 13) – E1 (E4 – 7)	W ⇔ BR	Defoger switch OFF	Below 3.0
TBP (E6 – 4) – E01 (E3 – 7)	R ⇔ W–B	IG switch ON	9 – 14

*1 A/T models.

1008J–01

INSPECTION

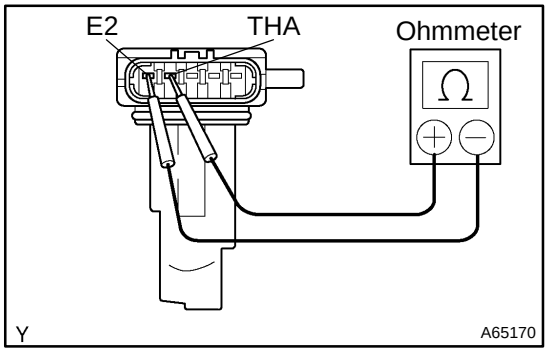

1. INTAKE AIR FLOW METER SUB–ASSY

(a) Inspect the intake air flow meter resistance.

(1) Using an ohmmeter, measure the resistance between terminals THA and E2.

Resistance:

At –20°C (–4°F) 13.6 – 18.4 kΩ
At 20°C (68°F) 2.21 – 2.69 kΩ
At 60°C (140°F) 0.49 – 0.67 kΩ

HINT:

If the resistance is not as specified, replace the intake air flow meter.

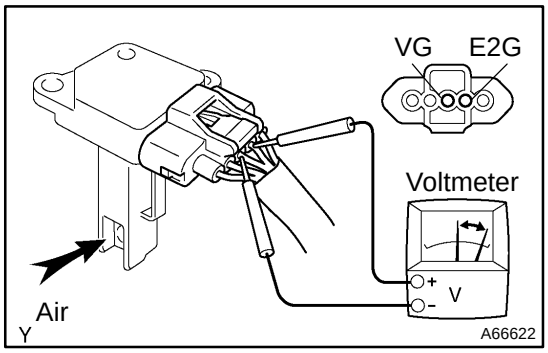

(b) Inspect the intake air flow meter operation.

(1) Connect the intake air flow meter connector.

(2) Turn the ignition switch to ON.

(3) Using a voltmeter, connect the positive (+) tester probe to terminal VG, and negative (–) tester probe to terminal E2G.

(4) Blow air into the intake air flow meter, and check that the voltage fluctuates.

HINT:

If operation is not as specified, replace the intake air flow meter.

(5) Turn the ignition switch to LOCK.

(6) Disconnect the intake air flow meter connector.

2. CAMSHAFT TIMING OIL CONTROL VALVE ASSY

(a) Resistance inspection.

(1) Using an ohmmeter, measure the resistance between the terminals.

Resistance: 6.9 – 7.9 Ω at 20°C (68°F)

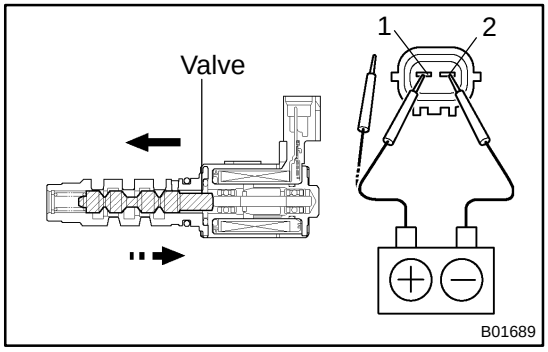

(b) Movement inspection.

(1) Connect the positive (+) lead from the battery to terminal 1 and negative (–) lead to terminal 2, and check the movement of the valve.

NOTICE:

Confirm the valve does not adhere.

HINT:

Bad returning of the valve by entrance of foreign objects causes subtle pressure leak to the advanced direction. Then, DTC can be detected.

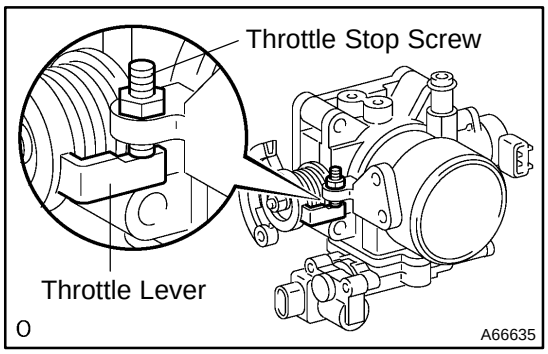

3. THROTTLE BODY ASSY

(a) Check throttle body.
  (1) Check that throttle valve shaft is not rickety.
  (2) Check that each port is not stopped up.
  (3) Check that throttle valve opens and closes smoothly.
  (4) Check that there is no clearance between the throttle stop screw and throttle lever at the throttle closed position.

NOTICE:

Do not adjust the throttle stop screw.

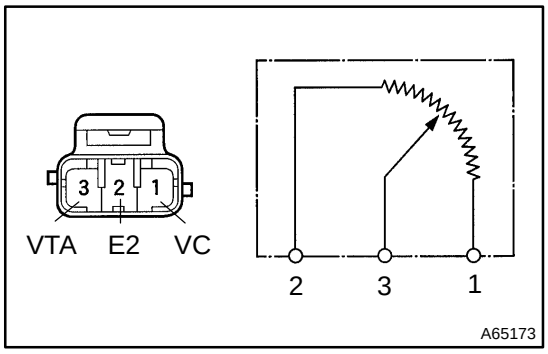

4. E.F.I. THROTTLE POSITION SENSOR

(a) Resistance inspection.
  (1) Disconnect the throttle position sensor connector.
  (2) Using an ohmmeter, measure the resistance between terminals VC and E2.

  Resistance: 2.5 – 6.0 kΩ

  (3) Check the change of resistance between terminals VTA and E2.

  Change of resistance:

  The resistance value increases in proportion to the throttle lever opening value.

HINT:

Throttle valve	Resistance
Fully open	0.2 – 5.7 kΩ
Fully close	2.0 – 10.2 kΩ

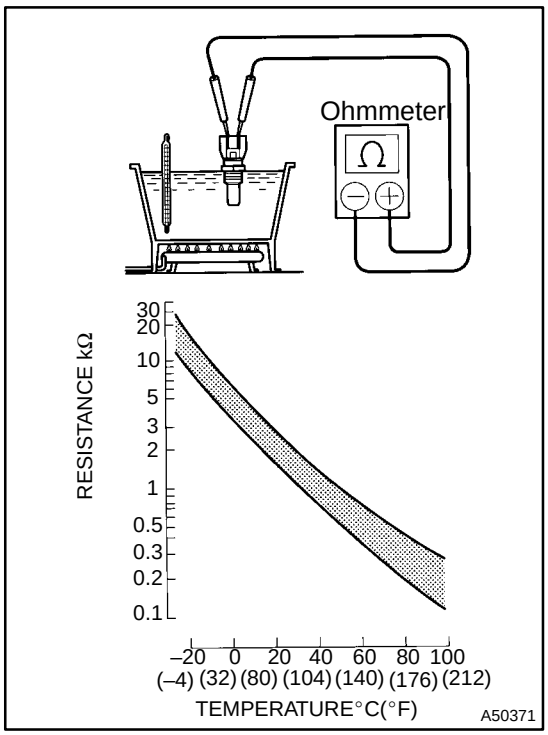

5. E.F.I. ENGINE COOLANT TEMPERATURE SENSOR

(a) Resistance inspection.

(1) Using an ohmmeter, measure the resistance between each terminal.

Resistance:

At 20°C (68°F) 2.32 – 2.59 kΩ

At 80°C (176°F) 0.310 – 0.326 kΩ

NOTICE:

In case of checking the water temperature sensor in the water, be careful not to allow water to go into the terminals, and after checking, wipe out the sensor.

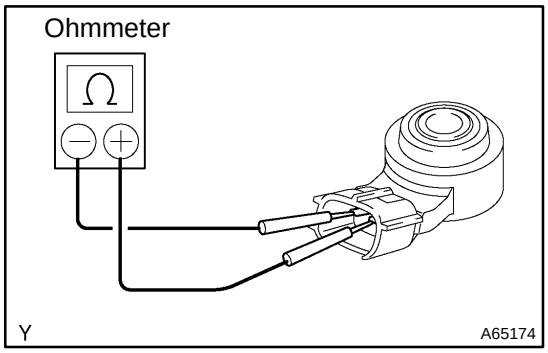

6. KNOCK CONTROL SENSOR

(a) Using an ohmmeter, measure the resistance between terminals.

Resistance: 120 – 280 kΩ at 20°C (68°F)

HINT:

If the resistance is not specified, replace the sensor.

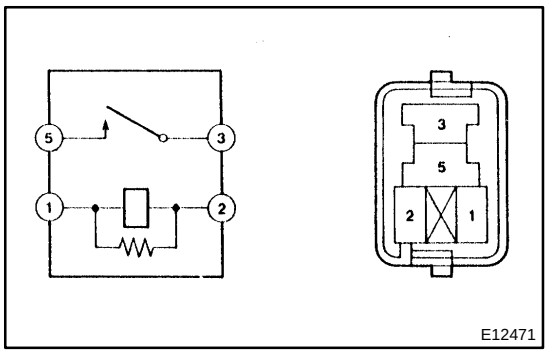

7. E.F.I. CIRCUIT OPENING RELAY ASSY

(a) Continuity inspection.

(1) Using an ohmmeter, check that continuity exists between each terminal.

Specified condition:

Between terminals 1 and 2 Continuity

Between terminals 3 and 5 No continuity

(2) Using an ohmmeter, check that continuity exists between terminals 3 and 5 when the battery voltage is applied across terminals 1 and 2.

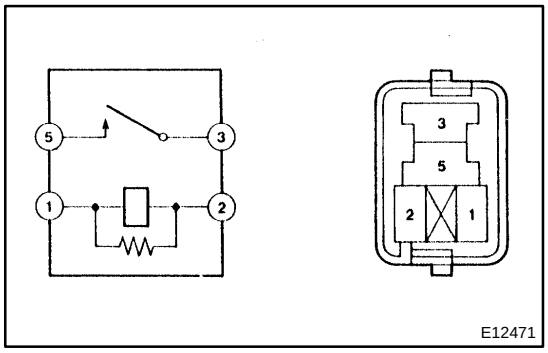

8. E.F.I ECU RELAY

(a) Continuity inspection.

(1) Using an ohmmeter, check that continuity exists between each terminal.

Specified condition:

Between terminals 1 and 2 Continuity

Between terminals 3 and 5 No continuity

(2) Using an ohmmeter, check that continuity exists between terminals 3 and 5 when the battery voltage is applied across terminals 1 and 2.

SFI SYSTEM (1ZZ–FE)

ON–VEHICLE INSPECTION

1008I–01

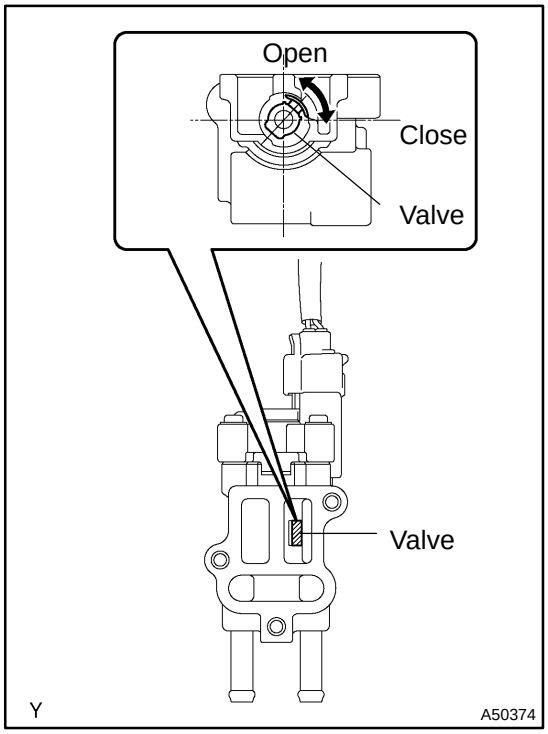

1. INSPECTION THROTTLE BODY IDLE SPEED CONTROL VALVE ASSY

NOTICE:

- **It is impossible to check the resister value and the operation of ISC valve by itself, because the ISC valve has an IC circuit inside it, which transforms the duty signal from the ECM to the derive signal.**
- **After checking, erase the DTC.**
- **Clear the DTC after inspection.**

HINT:

When the ISC valve system has malfunctions except for its adherence, DTC P0505 is detected.

(a) Operation inspection.

(1) Connect the ISC connector to the ISC valve.

(2) Check the ISC valve movement when the ignition switch is turned ON.

Movement:

Half open → fully close → fully open → half open

HINT:

ISC valve moves within 0.5 second.

THROTTLE BODY ASSY (1ZZ–FE)

COMPONENTS

1008M–01

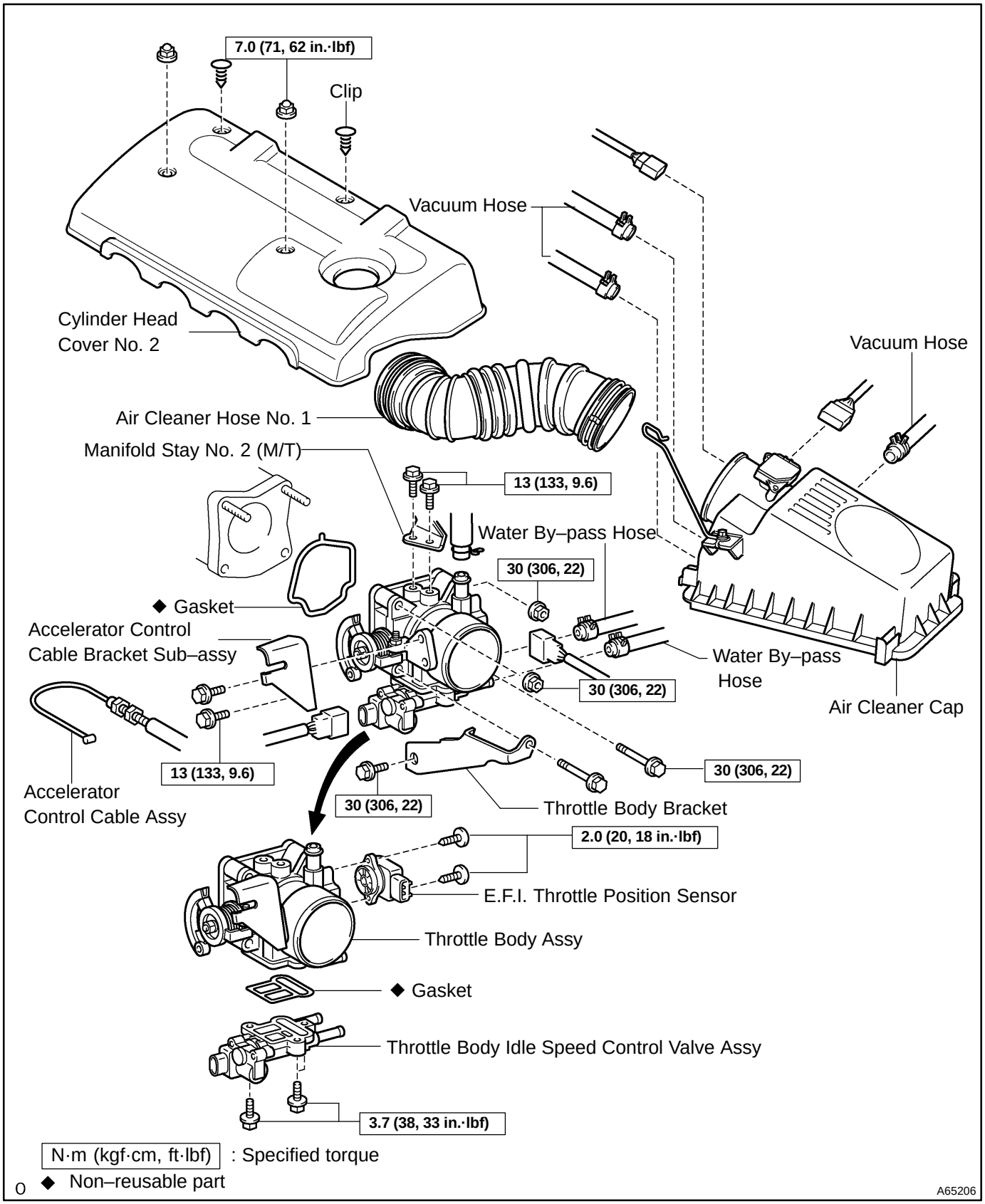

1008N–01

Removal & Installation and Disassembly & Reassembly

1. DRAIN COOLANT(See page 16–6)

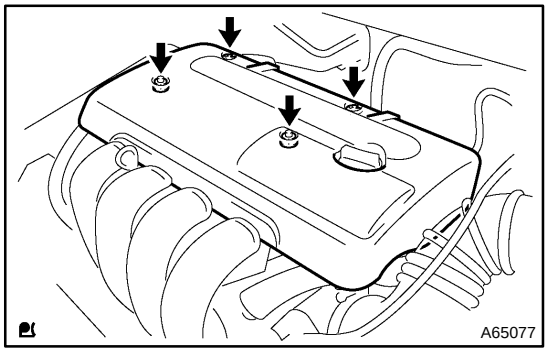

2. REMOVE CYLINDER HEAD COVER NO.2

(a) Remove 2 nuts, 2 clips and cylinder head cover No. 2.

3. REMOVE AIR CLEANER CAP SUB–ASSY

(a) Disconnect the MAF connector.
(b) Disconnect the VSV connector.

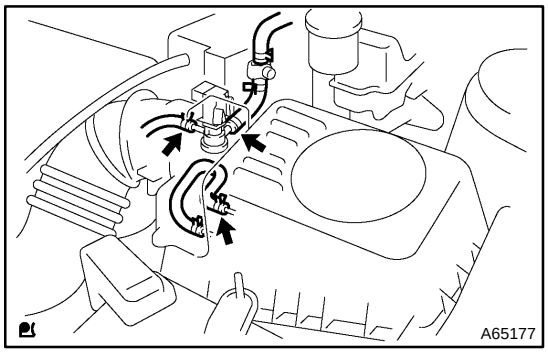

(c) Disconnect 3 vacuum hoses, as shown in the illustration.
(d) Loosen an air cleaner hose clump and disconnect an air cleaner hose No. 1.
(e) Remove the air cleaner cap.

4. REMOVE AIR CLEANER HOSE NO.1

5. SEPARATE ACCELERATOR CONTROL CABLE ASSY

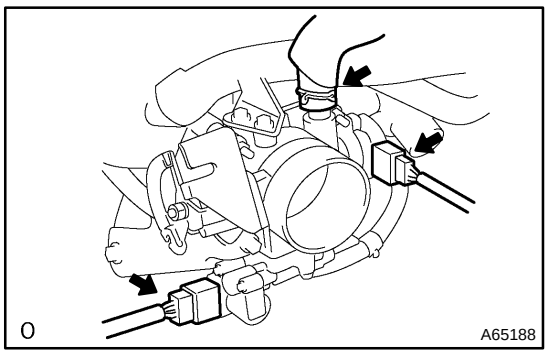

6. REMOVE THROTTLE BODY ASSY

(a) Disconnect an throttle position sensor connector.
(b) Disconnect a throttle body ISC valve assy connector.
(c) Disconnect a PCV hose.

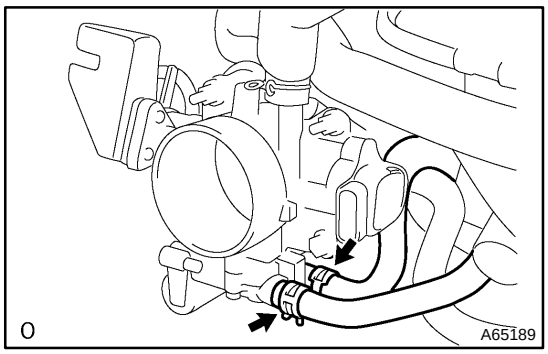

(d) Disconnect 2 water by–pass hoses.

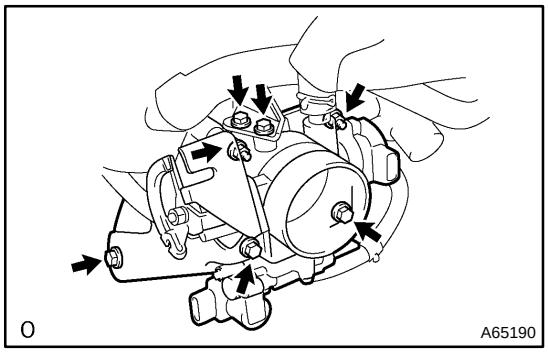

(e) Remove 5 bolts, 2 nuts, throttle body bracket and throttle body. (Transaxle M/T)

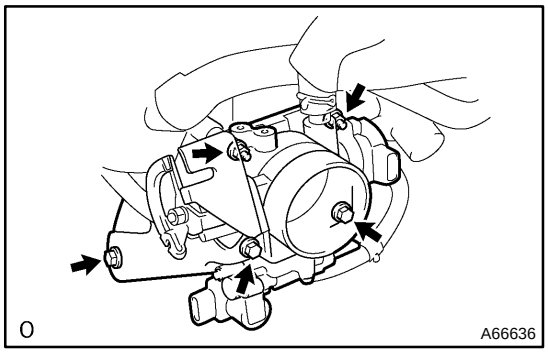

(f) Remove 3bolts, 2nuts and throttle body. (Transaxle A/T)

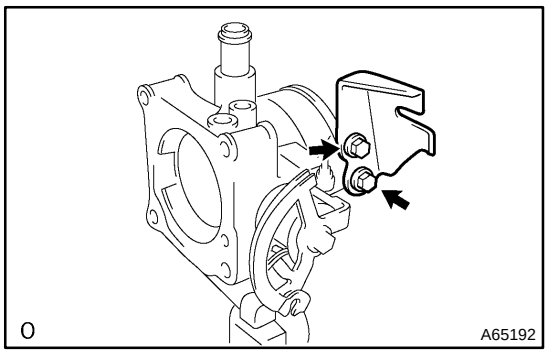

(g) Remove 2 bolts and accelerator cable bracket.

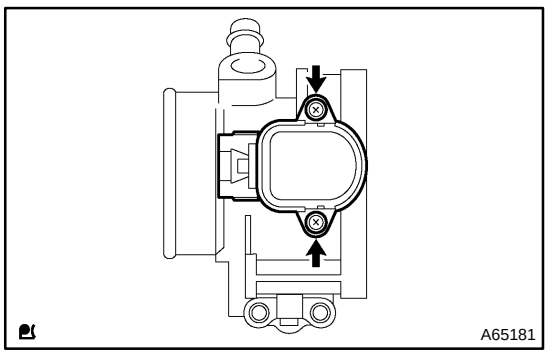

7. REMOVE E.F.I. THROTTLE POSITION SENSOR

(a) Remove 2 screws and the throttle position sensor as shown in the illustration.

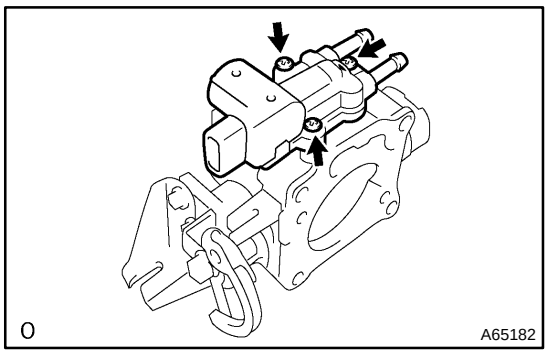

8. REMOVE THLOTTLE BODY IDLE SPEED CONTROL VALVE ASSY

(a) Remove 3 screws and the idle speed control valve assy.

(b) Remove the gasket from the throttle body.

9. INSTALL THLOTTLE BODY IDLE SPEED CONTROL VALVE ASSY

(a) Install a new gasket on the throttle body.

(b) Install the idle speed control valve assy with 3 screws.
Torque: 3.7 N·m (38 kgf·cm, 33 in.·lbf)

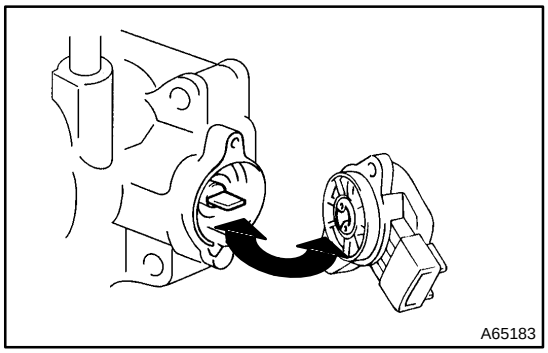

10. INSTALL E.F.I. THROTTLE POSITION SENSOR

(a) Check that the throttle valve is fully close.

(b) insert the throttle position sensor to the throttle body with it turned counterclockwise by 30° to 90° against the fully close valve position.

(c) By turning the throttle position sensor clockwise, tighten 2 screws.
Torque: 2.0 N·m (20 kgf·cm, 18 in.·lbf)

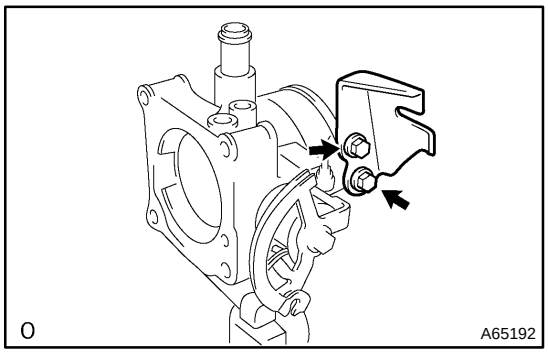

11. INSTALL THROTTLE BODY ASSY

(a) Install the accelerator control bracket with 2 bolts.
Torque: 13 N·m (133 kgf·cm, 9.6 ft·lbf)

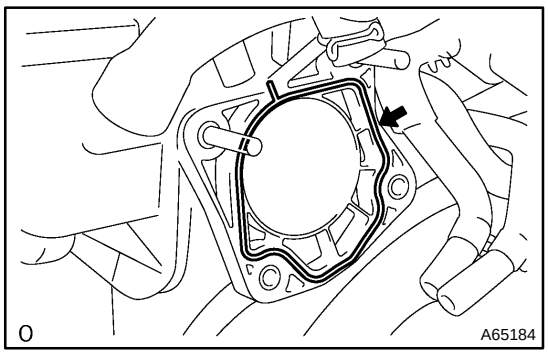

(b) Install a new gasket on the intake manifold, as shown in the illustration.

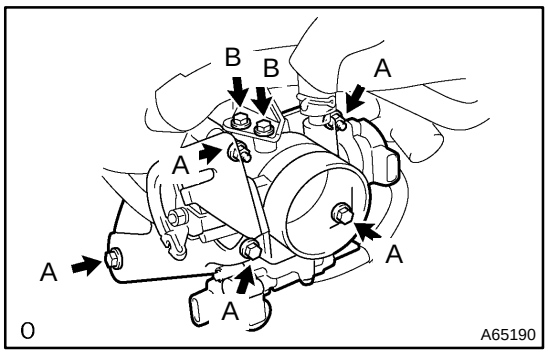

(c) Install the throttle body with 5 bolts and 2 nuts.(Transaxle M/T)

Torque:

A 30 N·m (306 kgf·cm, 22 ft·lbf)

B 13 N·m (133 kgf·cm, 9.6 ft·lbf)

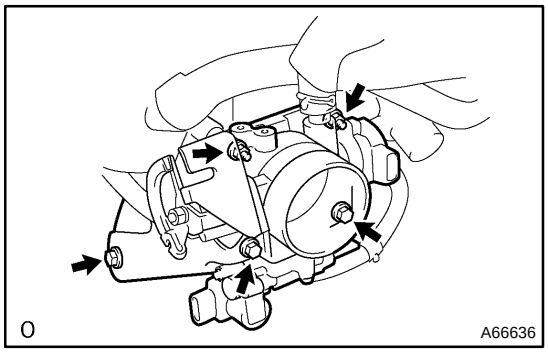

(d) Install the throttle body with 3 bolts and 2 nuts.(Transaxle A/T)

Torque: 30 N·m (306 kgf·cm, 22 ft·lbf)

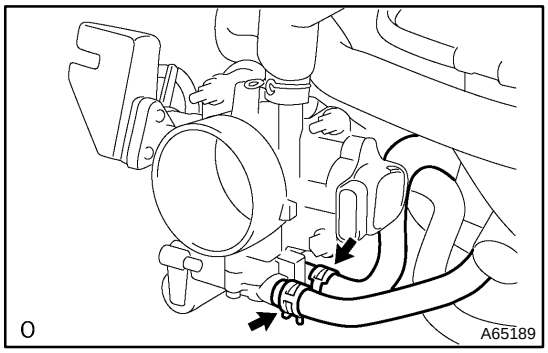

(e) Connect 2 water by–pass hoses to the throttle body.

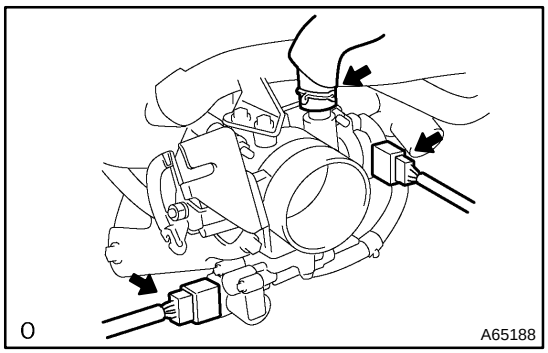

(f) Connect the PCV hose to the throttle body.

(g) Connect the throttle body idle speed control valve assy connector to the throttle body.

(h) Connect the throttle position sensor connector to the throttle body.

12. INSTALL AIR CLEANER CAP SUB–ASSY

(a) Install the air cleaner cap.

(b) Connect the air cleaner hose.

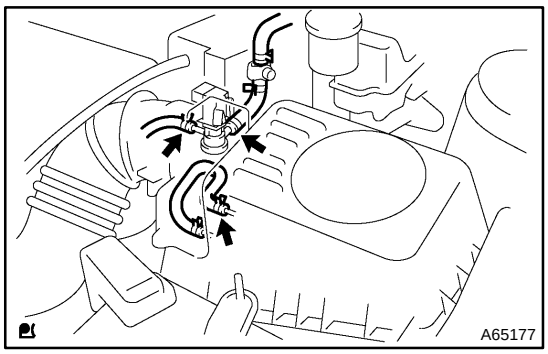

(c) Connect 3 vacuum hoses, as shown in the illustration.
(d) Connect the VSV connector.
(e) Connect the intake air flow meter connector.

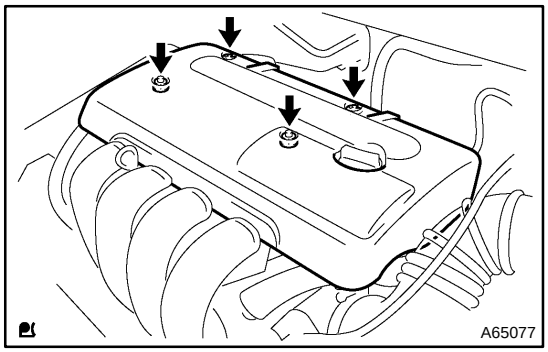

13. INSTALL CYLINDER HEAD COVER NO.2

(a) Install the cylinder head cover No. 2 with 2 nuts and 2 clips.
Torque: 7.0 N·m (71 kgf·cm, 62 in.·lbf)

14. ADD COOLANT(See page 16–6)

15. CHECK ENGINE COOLANT LEAK(See page 16–1)

THROTTLE BODY ASSY (2ZZ–GE)

COMPONENTS

1008O–01

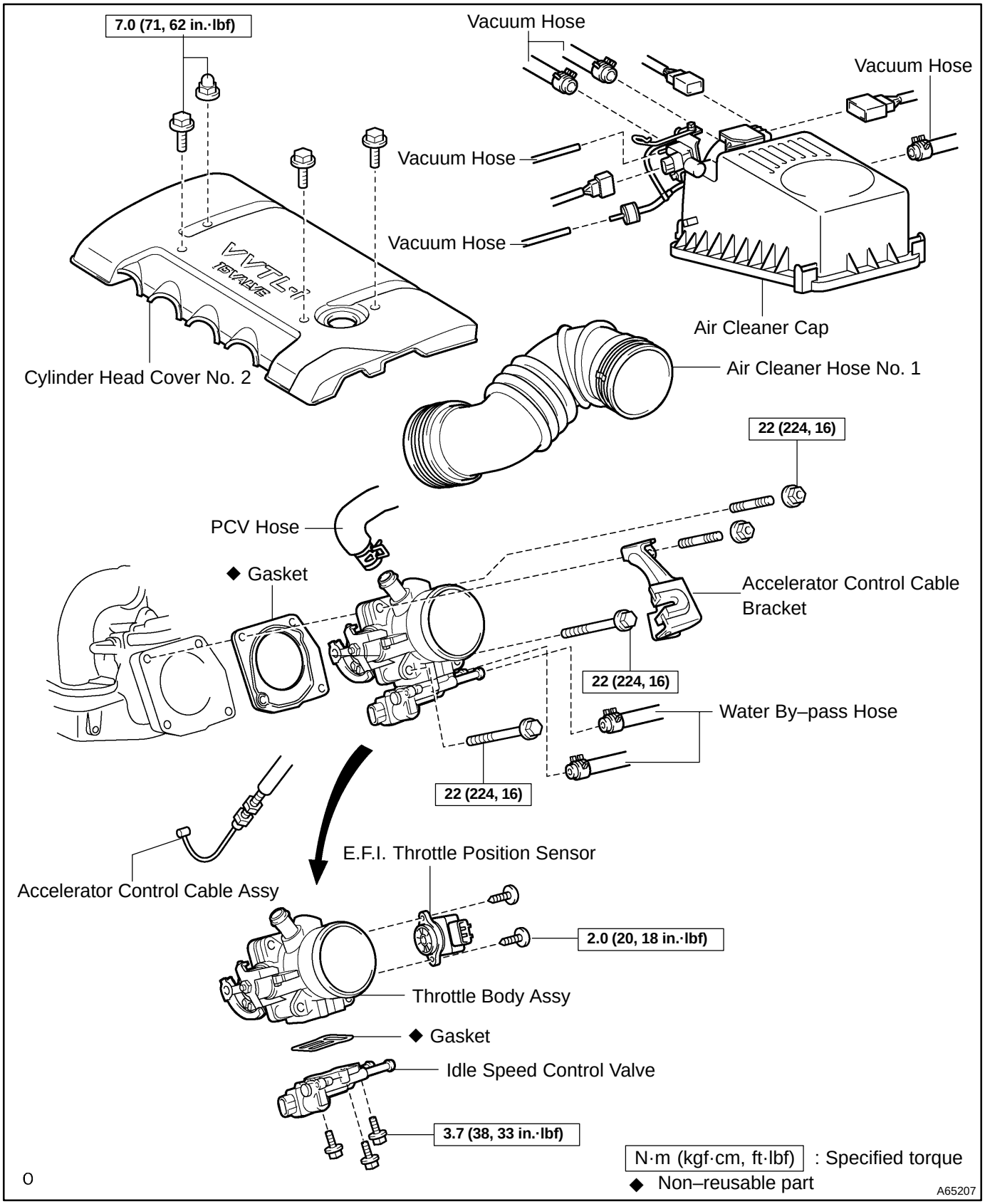

1008P–01

Removal & Installation and Disassembly & Reassembly

1. DRAIN COOLANT(See Page 16–6)

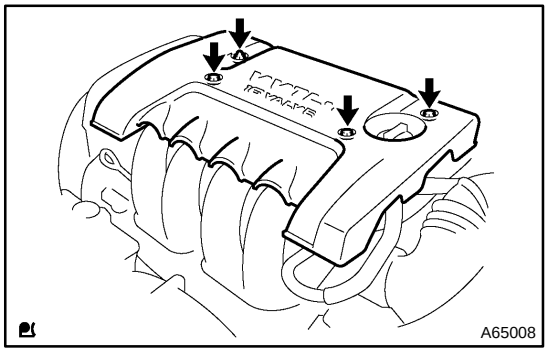

2. REMOVE CYLINDER HEAD COVER NO.2

(a) Remove 3 bolts, nut and cylinder head cover No. 2.

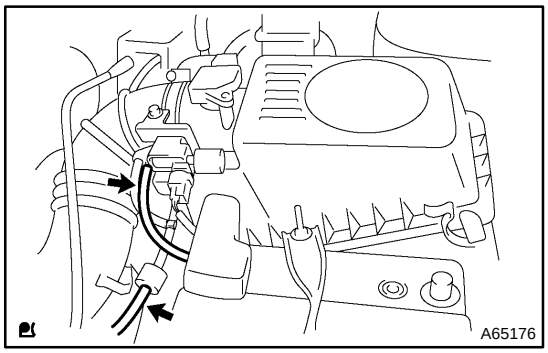

3. REMOVE AIR CLEANER CAP SUB–ASSY

(a) Disconnect 2 vacuum hoses as shown in the illustration.
(b) Disconnect the MAF connector.
(c) Disconnect 2 VSV connectors.

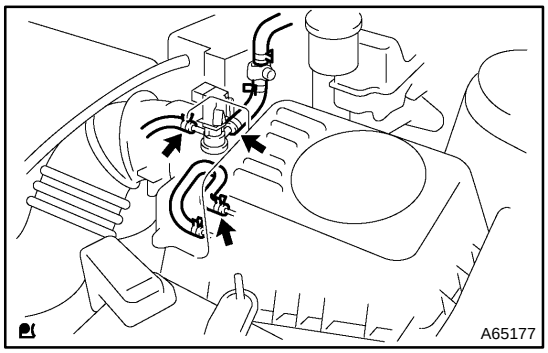

(d) Disconnect 3 vacuum hoses, as shown in the illustration.
(e) Loosen an air cleaner hose clamp and disconnect an air cleaner hose No. 1.
(f) Remove the air cleaner cap.

4. REMOVE AIR CLEANER HOSE NO.1

5. SEPARATE ACCELERATOR CONTROL CABLE ASSY

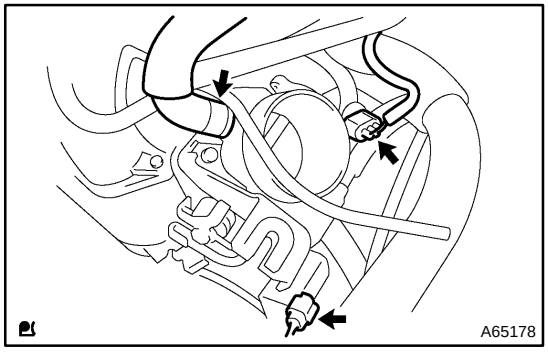

6. REMOVE THROTTLE BODY ASSY

(a) Disconnect an E.F.I. throttle position sensor connector.
(b) Disconnect a throttle body idle speed control valve assy connector.
(c) Disconnect a PCV hose from throttle body.

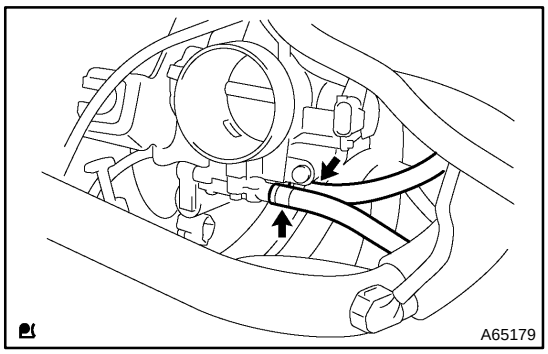

(d) Disconnect 2 water by–pass hoses from the throttle body.

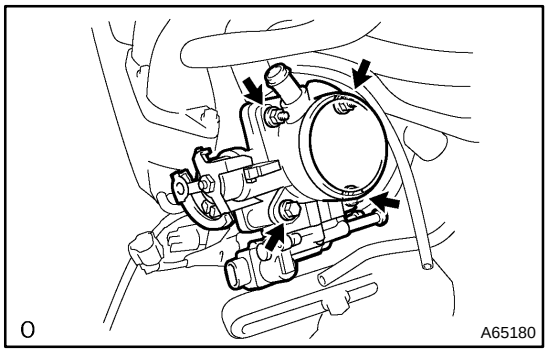

(e) Remove the throttle body and accelerator control cable bracket with 2 bolts and 2 nuts.

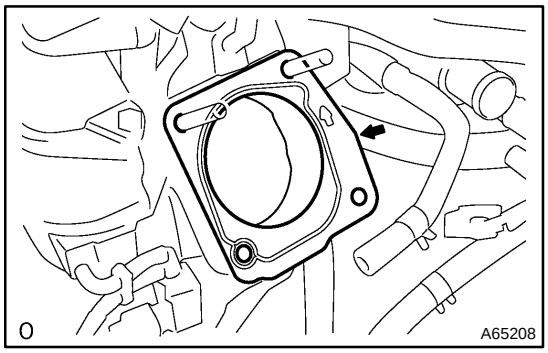

(f) Remove the gasket from the intake manifold.

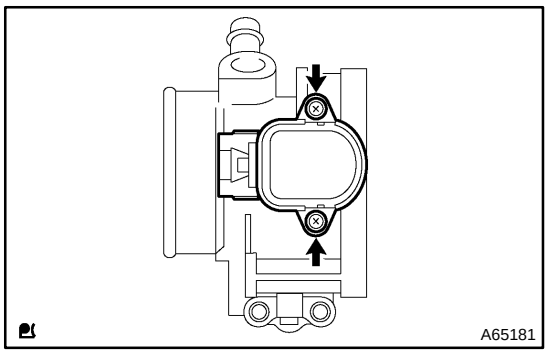

7. REMOVE E.F.I. THROTTLE POSITION SENSOR

(a) Remove 2 screws and throttle position sensor.

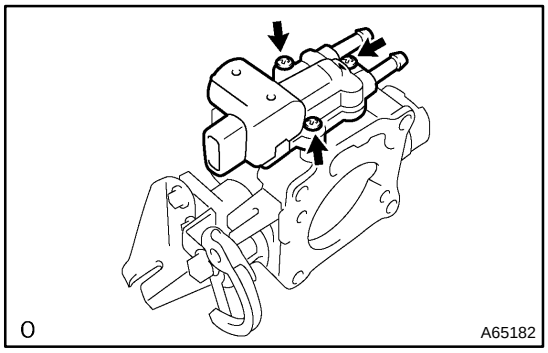

8. REMOVE THLOTTLE BODY IDLE SPEED CONTROL VALVE ASSY

(a) Remove 3 screws and idle speed control valve.

(b) Remove the gasket from the throttle body.

9. INSTALL THLOTTLE BODY IDLE SPEED CONTROL VALVE ASSY

(a) Install a new gasket on the throttle body.

(b) Install the idle speed control valve assy with 3 screws.
Torque: 3.7 N·m (38 kgf·cm, 33 in.·lbf)

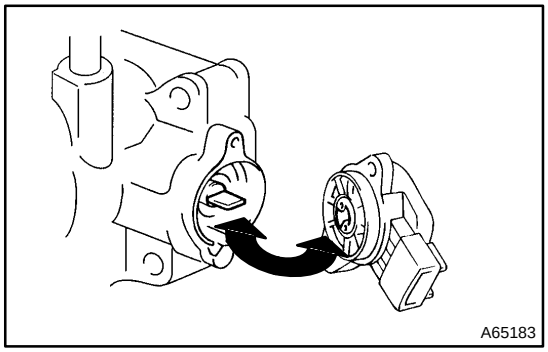

10. INSTALL E.F.I. THROTTLE POSITION SENSOR

(a) Check that the throttle valve is fully close.

(b) Insert the throttle position sensor to the throttle body with it turned clockwise by 30° to 90° against the fully close valve position.

(c) By turning the throttle position sensor clockwise, tighten 2 screws.
Torque: 2.0 N·m (20 kgf·cm, 18 in.·lbf)

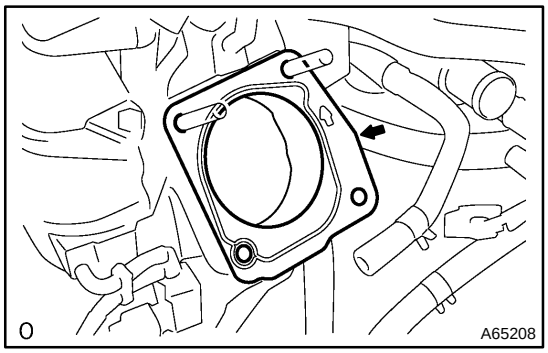

11. INSTALL THROTTLE BODY ASSY

(a) Install a new gasket on the intake manifold, as shown in the illustration.

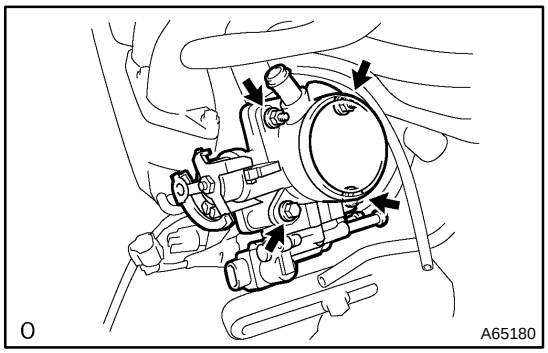

(b) Install the throttle body and accelerator control cable bracket with 2 bolts and 2 nuts.
Torque: 22 N·m (224 kgf·cm, 16 ft·lbf)

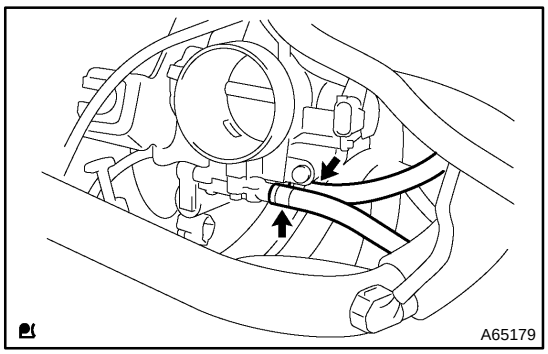

(c) Connect 2 water by–pass hoses to the throttle body.

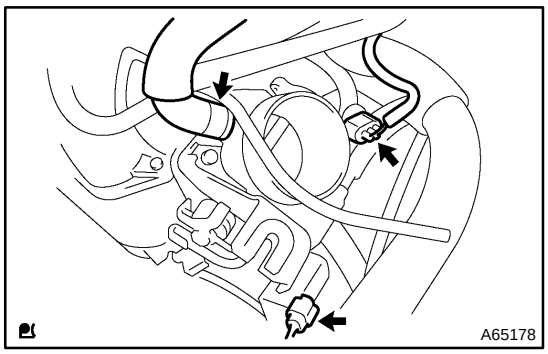

(d) Connect the PCV hose to the throttle body.
(e) Connect the throttle body idle speed control valve assy connector to the throttle body.
(f) Connect the throttle position sensor connector to the throttle body.

12. INSTALL AIR CLEANER CAP SUB–ASSY

(a) Install the air cleaner cap.
(b) Connect the air cleaner hose No. 1.

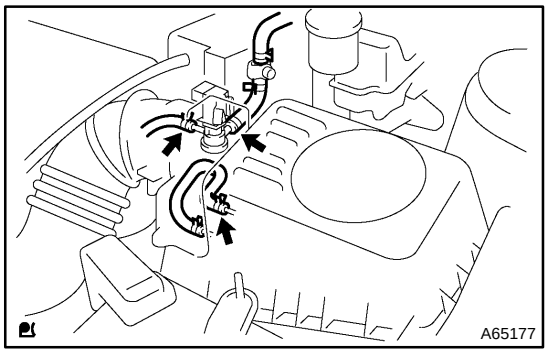

(c) Connect 3 vacuum hoses, as shown in the illustration.
(d) Connect 2 VSV connectors.
(e) Connect the MAF connector.

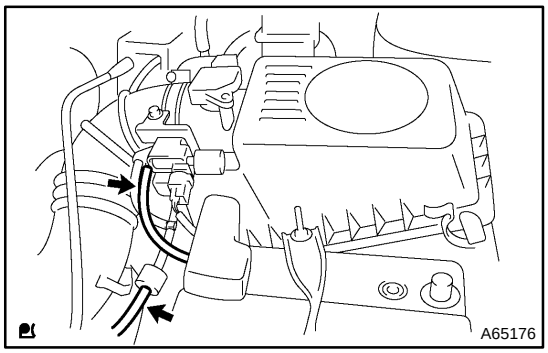

(f) Connect 2 vacuum hoses as shown in the illustration.

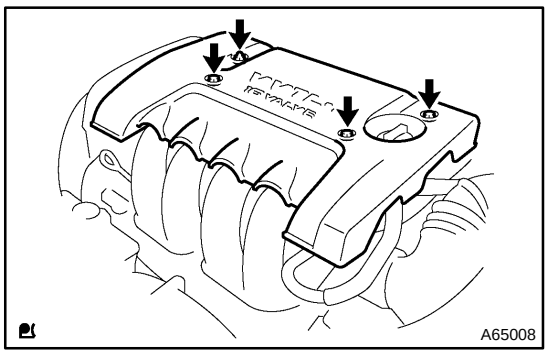

13. INSTALL CYLINDER HEAD COVER NO.2

(a) Install the cylinder head cover No. 2 with 3 bolts and a nut.
Torque: 7.0 N·m (71 kgf·cm, 62 in.·lbf)

14. ADD COOLANT (See Page 16–6)
15. CHECK ENGINE COOLANT LEAK (See Page 16–1)

1008L–01

INSPECTION

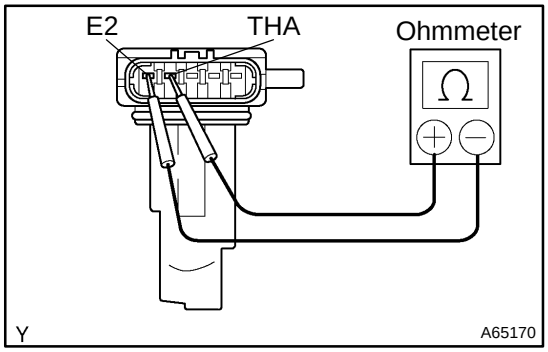

1. INTAKE AIR FLOW METER SUB–ASSY

(a) Inspect the intake air flow meter resistance.

(1) Using an ohmmeter, measure the resistance between terminals THA and E2.

Resistance:

At –20°C (–4°F) 13.6 – 18.4 kΩ

At 20°C (68°F) 2.21 – 2.69 kΩ

At 60°C (140°F) 0.49 – 0.67 kΩ

HINT:

If the resistance is not as specified, replace the intake air flow meter.

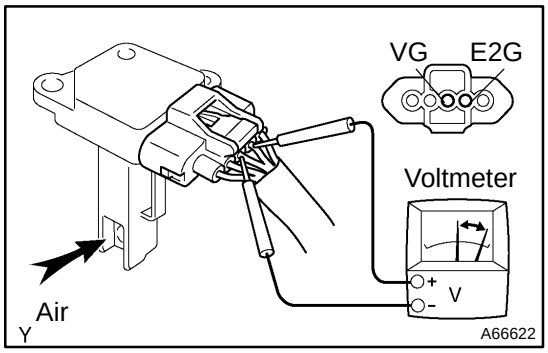

(b) Inspect the intake air flow meter operation.

(1) Connect the intake air flow meter connector.

(2) Turn the ignition switch to ON.

(3) Using a voltmeter, connect the positive (+) tester probe to terminal VG, and negative (–) tester probe to terminal E2G.

(4) Blow air into the intake air flow meter, and check that the voltage fluctuates.

HINT:

If operation is not as specified, replace the intake air flow meter.

(5) Turn the ignition switch to LOCK.

(6) Disconnect the intake air flow meter connector.

2. CAMSHAFT TIMING OIL CONTROL VALVE ASSY

(a) Resistance inspection.

(1) Using an ohmmeter, measure the resistance between the terminals.

Resistance: 6.9 – 7.9 Ω at 20°C (68°F)

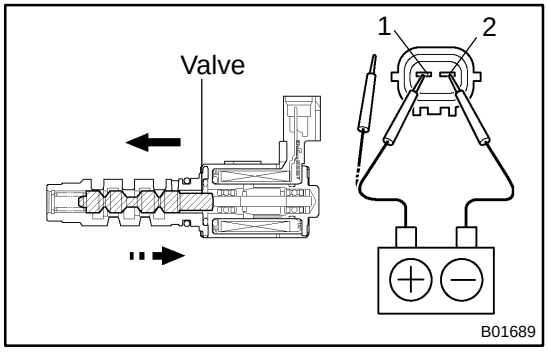

(b) Movement inspection.

(1) Connect the positive (+) lead from the battery to terminal 1 and negative (–) lead to terminal 2, and check the movement of the valve.

NOTICE:

Confirm the valve does not adhere.

HINT:

Bad returning of the valve by entrance of foreign objects causes subtle pressure leak to the advanced direction. Then, DTC can be detected.

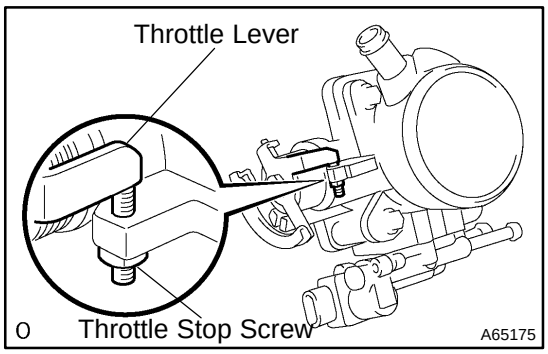

3. THROTTLE BODY ASSY

(a) Check throttle body.
  (1) Check that throttle valve shaft is not rickety.
  (2) Check that each port is not stopped up.
  (3) Check that throttle valve opens and closes smoothly.
  (4) Check that there is no clearance between the throttle stop screw and throttle lever at the throttle closed position.

NOTICE:

Do not adjust the throttle stop screw.

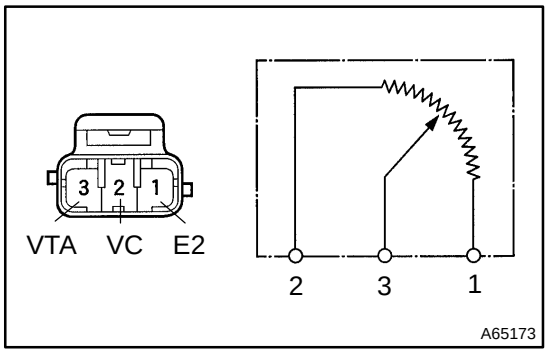

4. E.F.I. THROTTLE POSITION SENSOR

(a) Resistance inspection.
  (1) Disconnect the throttle position sensor connector.
  (2) Using an ohmmeter, measure the resistance between terminals VC and E2.

  Resistance: 2.5 – 6.0 kΩ

  (3) Check the change of resistance between terminals VTA and E2.

  Change of resistance:

  The resistance value increases in proportion to the throttle lever opening value.

HINT:

Throttle valve	Resistance
Fully open	0.2 – 5.7 kΩ
Fully close	2.0 – 10.2 kΩ

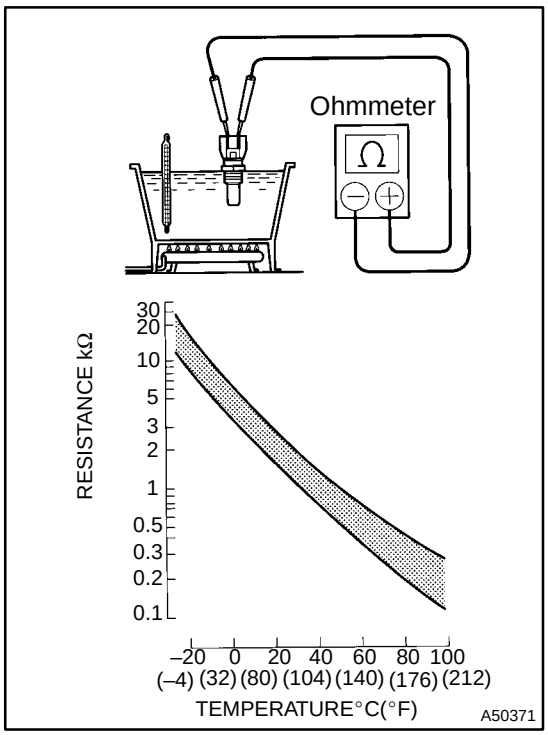

5. E.F.I. ENGINE COOLANT TEMPERATURE SENSOR

(a) Resistance inspection.

(1) Using an ohmmeter, measure the resistance between each terminal.

Resistance:

At 20°C (68°F) 2.32 – 2.59 kΩ

At 80°C (176°F) 0.310 – 0.326 kΩ

NOTICE:

In case of checking the water temperature sensor in the water, be careful not to allow water to go into the terminals, and after checking, wipe out the sensor.

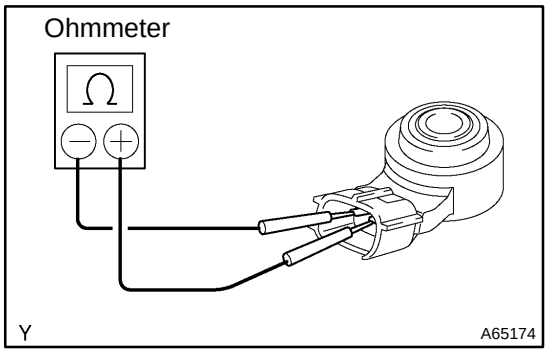

6. KNOCK CONTROL SENSOR

(a) Using an ohmmeter, measure the resistance between terminals.

Resistance: 120 – 280 kΩ at 20°C (68°F)

HINT:

If the resistance is not specified, replace the sensor.

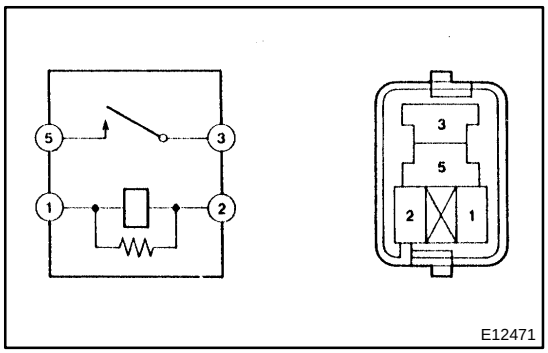

7. E.F.I. CIRCUIT OPENING RELAY ASSY

(a) Continuity inspection.

(1) Using an ohmmeter, check that continuity exists between each terminal.

Specified condition:

Between terminals 1 and 2 Continuity

Between terminals 3 and 5 No continuity

(2) Using an ohmmeter, check that continuity exists between terminals 3 and 5 when the battery voltage is applied across terminals 1 and 2.

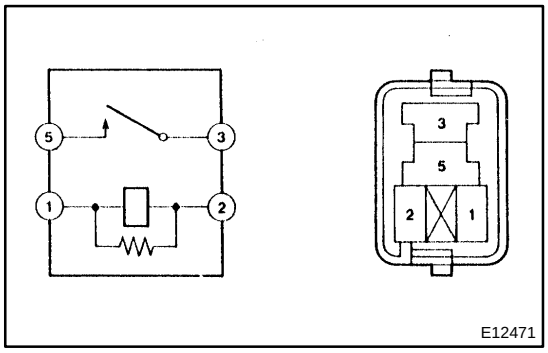

8. E.F.I ECU RELAY

(a) Continuity inspection.

(1) Using an ohmmeter, check that continuity exists between each terminal.

Specified condition:

Between terminals 1 and 2 Continuity

Between terminals 3 and 5 No continuity

(2) Using an ohmmeter, check that continuity exists between terminals 3 and 5 when the battery voltage is applied across terminals 1 and 2.

SFI SYSTEM (2ZZ–GE)

ON–VEHICLE INSPECTION

1008K–01

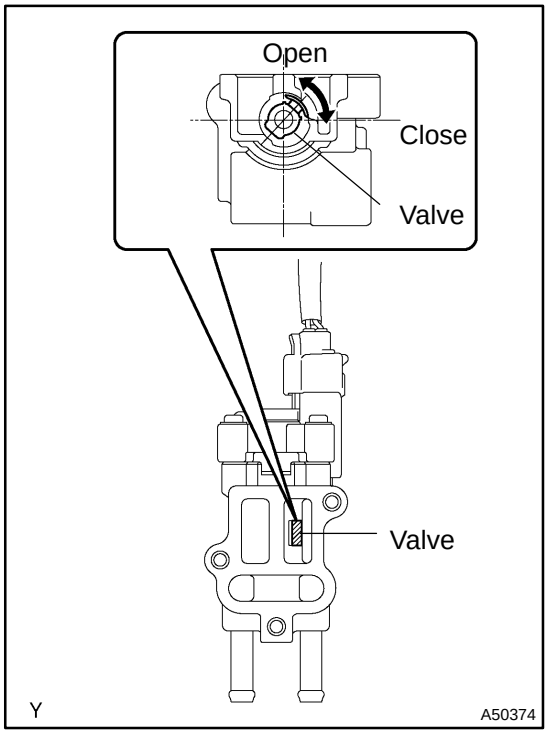

1. INSPECTION THROTTLE BODY IDLE SPEED CONTROL VALVE ASSY

NOTICE:

- **It is impossible to check the resister value and the operation of ISC valve by itself, because the ISC valve has an IC circuit inside it, which transforms the duty signal from the ECM to the derive signal.**
- **After checking, erase the DTC.**
- **Clear the DTC after inspection.**

HINT:

When the ISC valve system has malfunctions except for its adherence, DTC P0505 is detected.

(a) Operation inspection.

(1) Connect the ISC connector to the ISC valve.

(2) Check the ISC valve movement when the ignition switch is turned ON.

Movement:

Half open → fully close → fully open → half open

HINT:

ISC valve moves within 0.5 second.

110F6–01

INSPECTION

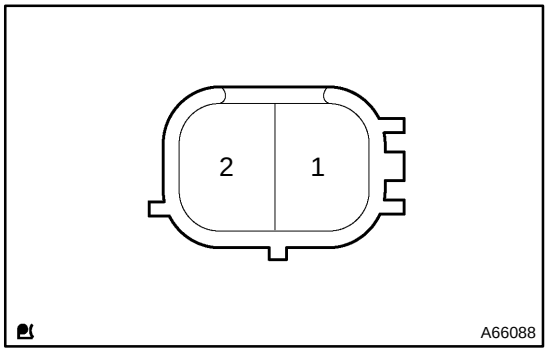

1. FUEL INJECTOR ASSY

(a) Inspect injector resistance.

(1) Using an ohmmeter,measure the resistance between the terminals.

Resistance: 13.4 – 14.2 Ω at 20°C (68°F)

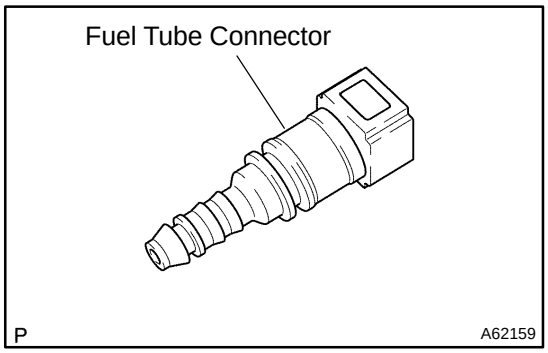

(b) Inspect injector inspection

CAUTION:

Keep injector clear of sparks during the test.

(1) Purchase a new fuel tube, and take out the fuel tube connector from its tube.

HINT:

Part No. 23901–0D010

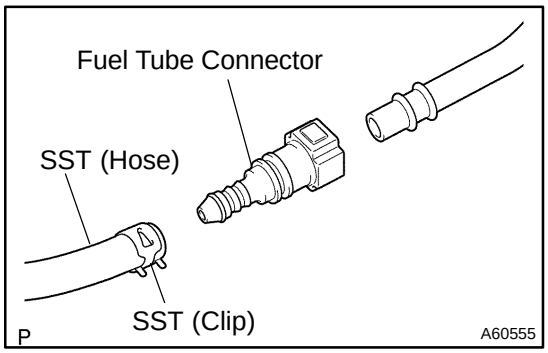

(2) Connect SST and fuel tube connector to the fuel pipe.

SST 09268–41047 (90467–13001, 95336–08070)

CAUTION:

Perform connecting operations of the fuel tube connector (quick type) after observing the precautions.

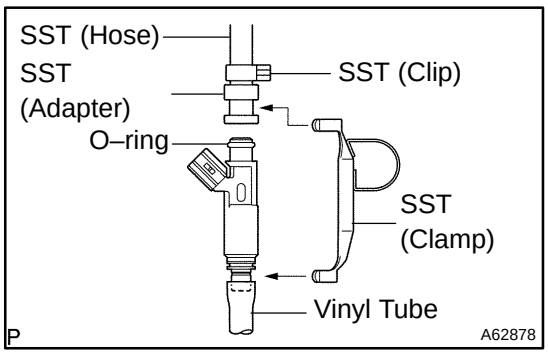

(3) Install an O–ring to the fuel injector.

(4) Connect SST (union and hose) to fuel the injector, and hold the fuel injector to prevent gasoline from splashing out. (See page 11–1)

SST 09268–41047 (90467–13001, 95336–08070, 09268–41110, 09268–41300)

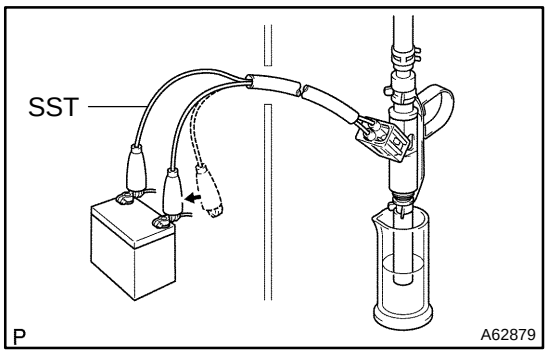

(5) Put the fuel injector into a graduated cylinder.

HINT:

Install a suitable vinyl tube onto the injector to prevent gasoline from splashing out.

(6) Operate the fuel pump.

(7) Connect SST to the connector of fuel injector.

SST 09842–30080

(8) Connect SST to the battery for 15 seconds, and measure the injection volume with a graduated cylinder. Test the each fuel injector 2 or 3 time.

Injection volume:

1ZZ–FE 60 – 73 cm^3 (3.7 – 4.5 cu in.) per 15 seconds

2ZZ–GE 77 – 94 cm^3 (4.7 – 5.7 cu in.) per 15 seconds

Difference between each injector:

1ZZ–FE 13 cm^3 (0.8 cu in.) or less

2ZZ–GE 17 cm^3 (1.0 cu in.) or less

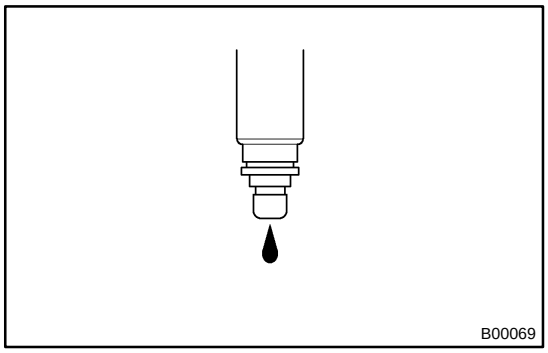

(c) Inspect leakage

(1) In the condition above, disconnect the test probes of the SST from the battery, and check the fuel leakage from the fuel injector.

Fuel drop: 1 drop or less per 12 minutes

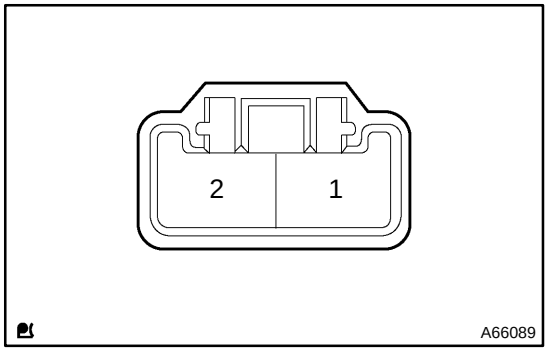

2. FUEL PUMP

(a) Inspect fuel pump resistance.

(1) Using an ohmmeter, measure the resistance between the terminals.

Resistance: 0.2 – 3.0 Ω at 20°C (68°F)

(b) Inspect fuel pump operation

(1) Apply battery voltage to both terminals. Check that the pump operates.

NOTICE:

- **These tests must be done quickly (within 10 seconds) to prevent the coil from burning out.**
- **Keep fuel pump as far away from the battery as possible.**
- **Always do the switching at the battery side.**

110F5–01

ON–VEHICLE INSPECTION

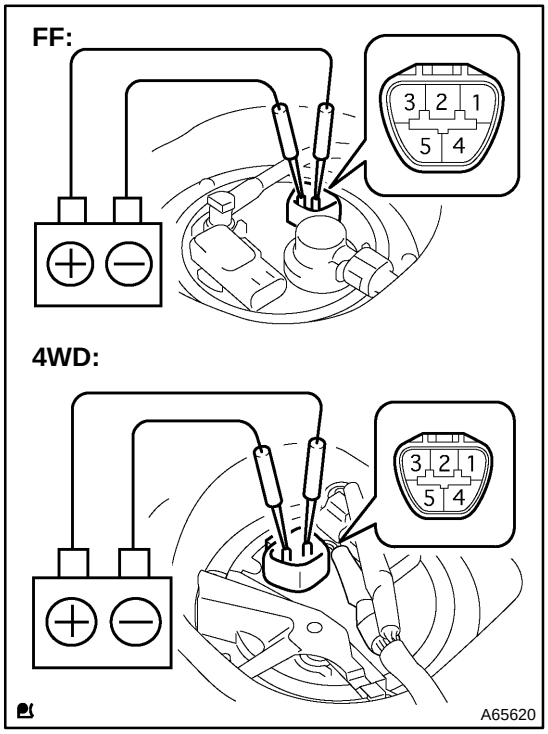

1. CHECK FUEL PUMP OPERATION

(a) Connect the hand–held tester to the DLC3.

(b) Turn the ignition switch ON and hand–held tester main switch ON.

NOTICE:

Do not start the engine.

(c) Select the active test mode on the hand–held tester.

(d) Please refer to the hand–held tester operator's manual for further details.

(e) If you have no hand–held tester, connect the positive (+) lead form the battery to terminal 4 of the connecter, and the negative (–) lead to terminal 5.

NOTICE:

- **These tests must be done quickly (within 10 seconds) to prevent the coil burning out.**
- **Keep the fuel pump as far away from the battery as possible.**
- **Always do the switching at the battery side.**

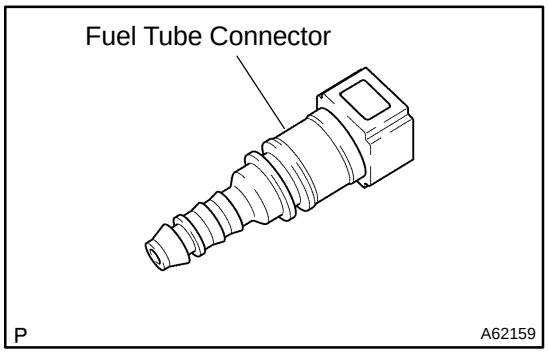

2. CHECK FUEL PRESSURE

(a) Prepare for inspection.

(1) Purchase a new fuel tube, and take out the fuel tube connector from its tube.

HINT:

Part No. 23901–0D010

(b) Work for prevent gasoline from spilling out. (See page 11–1)

(c) Disconnect the EFI fuel pipe clamp. (See page 11–1)

(d) Disconnect the fuel tube from the fuel main tube. (See page 11–1)

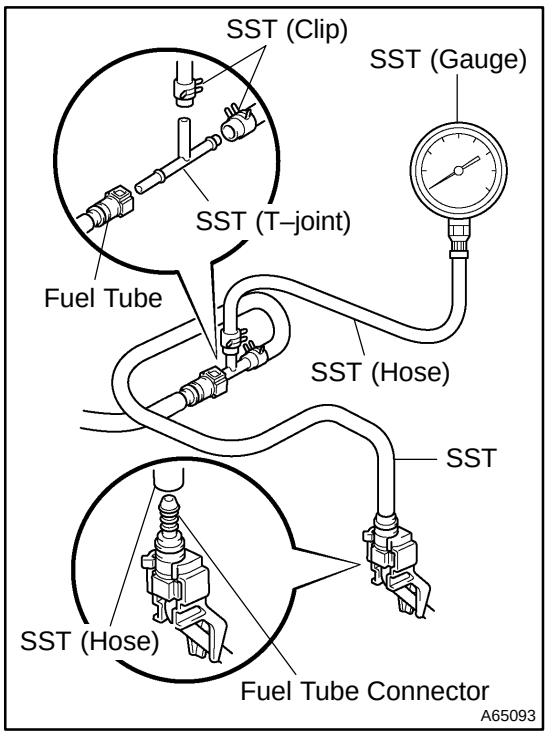

(e) Install SST (pressure gauge) as shown in the illustration by using the SST and fuel tube connector.
SST 09268–41047 (90467–13001, 95336–08070), 09268–45014 (09268–41200, 09268–41220, 09268–41250, 90467–13001)

(f) Wipe off any splattered gasoline.

(g) Start the engine.

(h) Measure the fuel pressure at idle.
Fuel pressure:
304 – 343 kPa (3.1 – 3.5 kgf·cm^2, 44 – 50 psi)

(i) Stop the engine.

(j) Check that the fuel pressure remains as specified for 5 minutes after the engine has stopped.
Fuel pressure:
147 kPa (1.5 kgf·cm^2, 21 psi) or more

If pressure is not as specified, check the fuel pump, pressure regulator and/or injectors.

(k) After checking fuel pressure, disconnect the negative (–) terminal cable from the battery and carefully, remove the SST and fuel tube connector to prevent gasoline from the splashing.

(l) Reconnect the fuel tube to fuel main tube.

(m) Install the EFI fuel pipe clamp.

(n) Check fuel leak. (See page 11–1)

FUEL SYSTEM

110F4–01

PRECAUTION

1. **BEFORE WORKING ON FUEL SYSTEM, DISCONNECT NEGATIVE (–) TERMINAL CABLE FROM BATTERY**
2. **DO NOT SMOKE OR WORK NEAR AN OPEN FLAME WHEN WORKING ON FUEL SYSTEM**
3. **KEEP GASOLINE AWAY FROM RUBBER OR LEATHER PARTS**

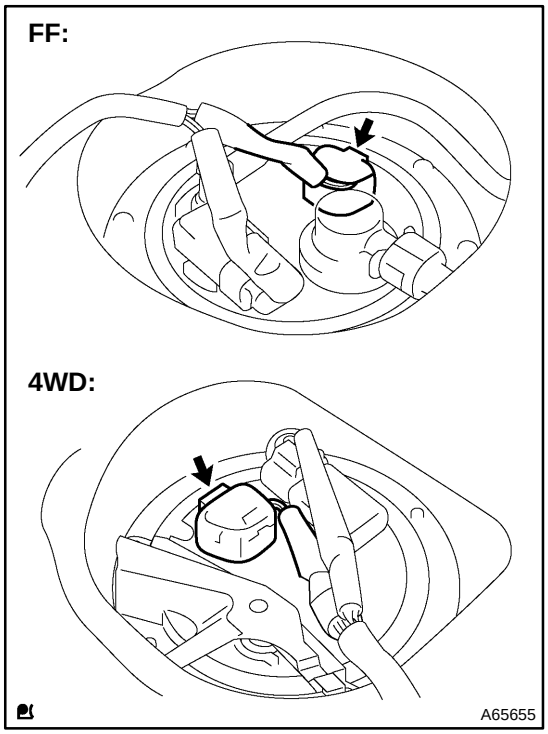

4. WORK FOR PREVENT GASOLINE FROM SPILLING OUT

(a) Remove the rear seat cushion.
(See page FF: 11–21, 4WD: 11–29)
(b) Remove rear floor service hole cover.
(See page FF: 11–21, 4WD: 11–29)
(c) Disconnect the fuel pump connector.
(d) Start the engine. After the engine has stopped on its own, turn the ignition switch to lock.
(e) Disconnect negative (–) terminal cable from battery.
(f) Connect the fuel pump connector.
(g) Install rear floor service hole cover.
(See page FF: 11–21, 4WD: 11–29)
(h) Install the rear seat cushion.
(See page FF: 11–21, 4WD: 11–29)

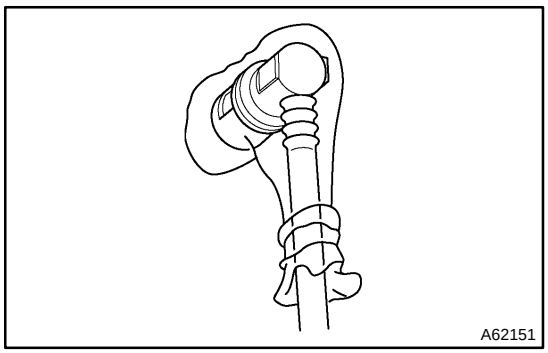

5. FUEL SYSTEM

(a) When disconnecting the high fuel pressure line, a large amount of gasoline will spill out, so observe these procedures.
  (1) Work for prevent gasoline from spilling out.
  (2) Disconnect the fuel tank main tube.
  (3) Drain the fuel remained inside the fuel tank main tube.
  (4) Protect the disconnected fuel tank main tube from damage and foreign material by covering it with a vinyl bag.

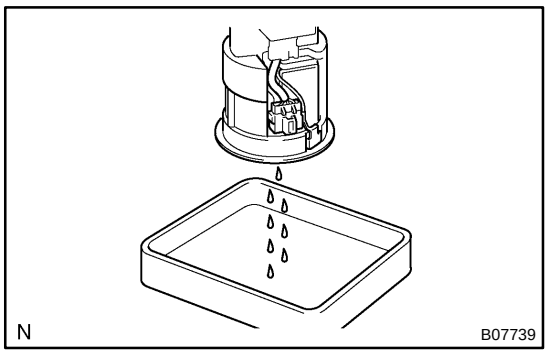

(5) Put a container under the connection.

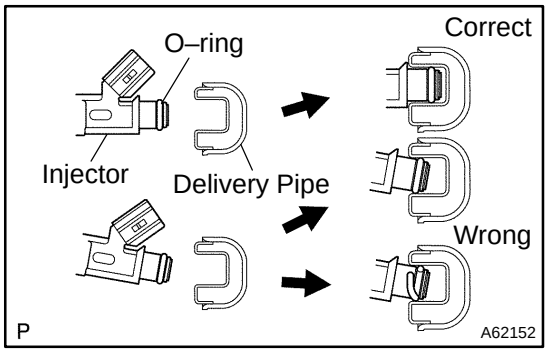

(b) Observe these precautions when removing and installing the fuel injector.
(1) Never reuse an O–ring.
(2) When placing a new O–ring on the fuel injector, take care not to damage it in any way.
(3) Coat a new O–ring with spindle oil or gasoline before installing.

NOTICE:
Never use engine, gear or brake oil.

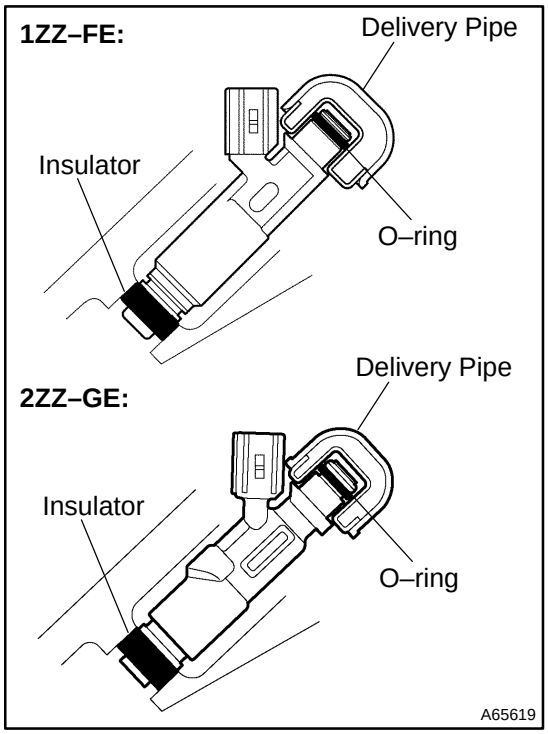

(c) Install the fuel injector to the fuel delivery pipe and cylinder head, as shown in the illustration. Before installing the fuel injector, be sure to apply spindle oil or gasoline on the place where the fuel delivery pipe touches an O–ring of the fuel injector.

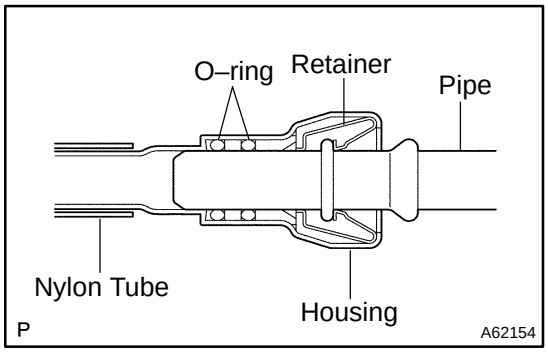

(d) Observe these precautions when disconnecting the fuel delivery pipe.

HINT:
The structure of the metallic connector is shown as illustration.

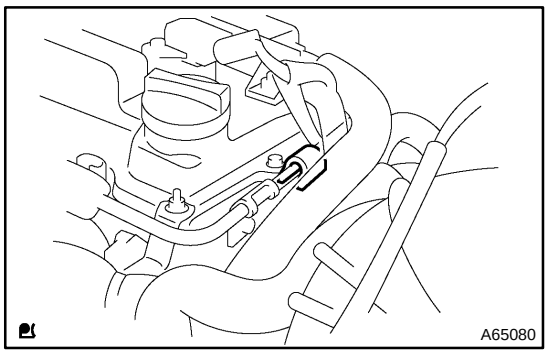

(1) Remove the EFI fuel pipe clamp. (1ZZ–FE)
(2) Get the metallic connector of the fuel tube assembly, pull it out towards the rear and hold it as it is.

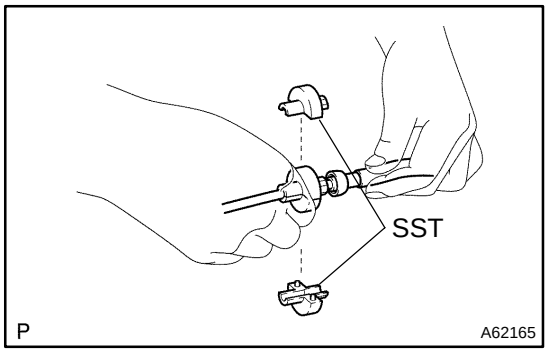

(3) Assemble SST to the connection as shown.
SST 09268–21010

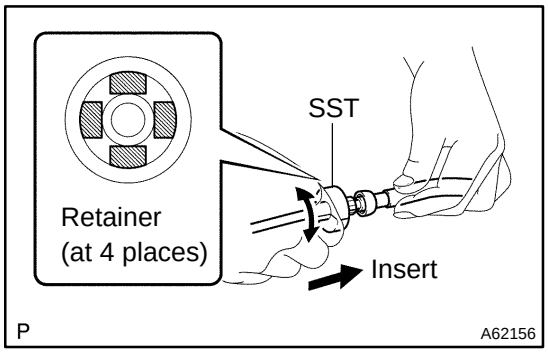

(4) Turn SST, align the retainers inside the connector with SST chamfered parts and insert SST into the connector.
(5) Slide the SST and the connector together towards the fuel tube assembly.

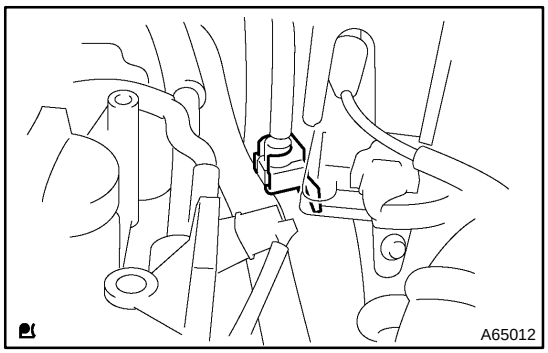

(e) Observe these precautions when disconnecting the fuel tube connector (quick type).
(1) Remove the EFI fuel pipe clamp.
(2) Check if there is any dirt like mud on the pipe and around the connector before disconnecting them and clean the dirt away.

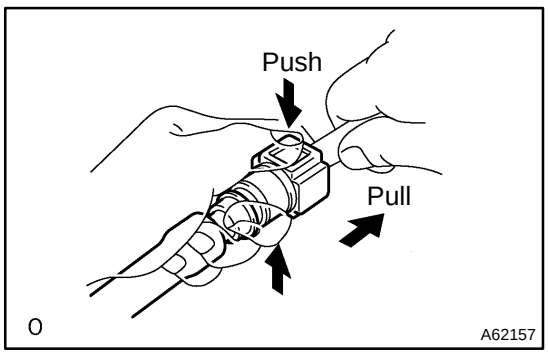

(3) Be sure to disconnect with hands.
(4) When the connector and the pipe are stuck, pinch the retainer between the hands, push and pull the connector to free to disconnect and pull it out.

NOTICE:
Do not use any tool at this time.

(5) Inspect if there is any dirt or the likes on the seal surface of the disconnected pipe and clean it away.

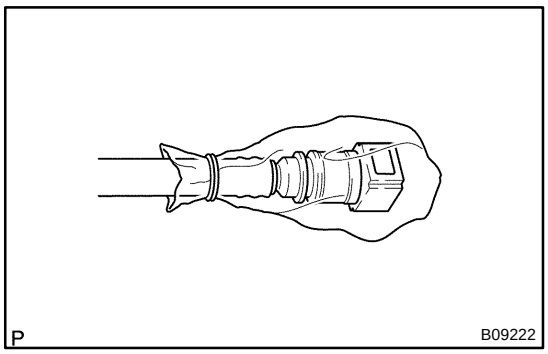

(6) Prevent the disconnected pipe and connector from damaging and mixing foreign objects by covering them with a vinyl bag.

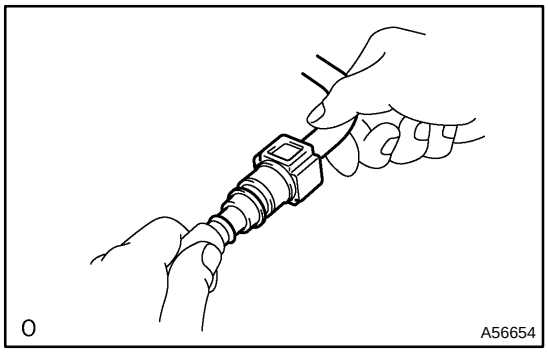

(f) Observe these precautions when connecting the fuel tube connector (quick type).
(1) Match the axis of the connector with axis of the pipe, and push in the connector until retainer makes a ”click” sound. In case that the connections is tight, apply little amount of new engine oil on the tip of the pipe.
(2) After having finished the connection, check if the pipe and the connector are securely connected by pulling them.

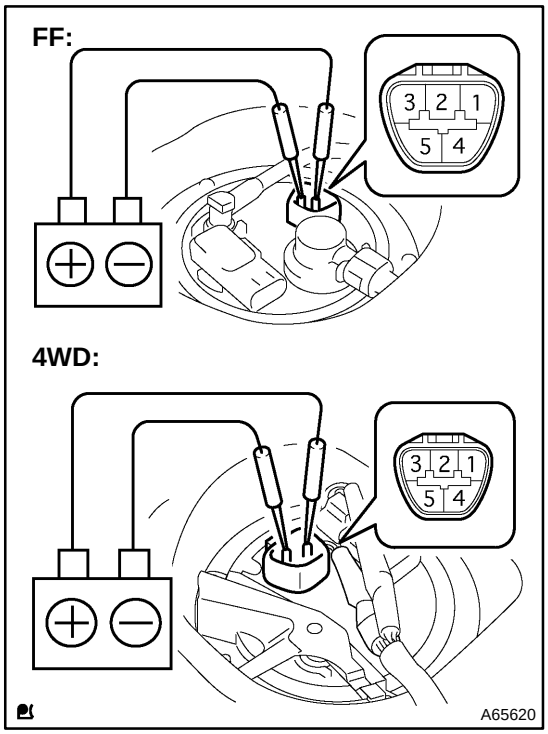

6. CHECK FUEL LEAK

(a) Check that there are no fuel leaks after doing maintenance anywhere on the fuel system.
(1) Connect the hand–held tester to the DLC3.
(2) Turn the ignition switch ON and hand–held tester main switch ON.
(3) Select the active test mode on the hand–held tester.
(4) Please refer to the hand–held tester operator’s manual for further details.
(5) If you have no hand–held tester, connect the positive (+) and negative (–) leads from the battery to the fuel pump connector.
(6) Check that there are no leaks from any part of the fuel system.
(7) Turn the ignition switch to LOCK.
(8) Disconnect the hand–held tester from the DLC3.

FUEL INJECTOR ASSY (1ZZ–FE)

COMPONENTS

110F2–01

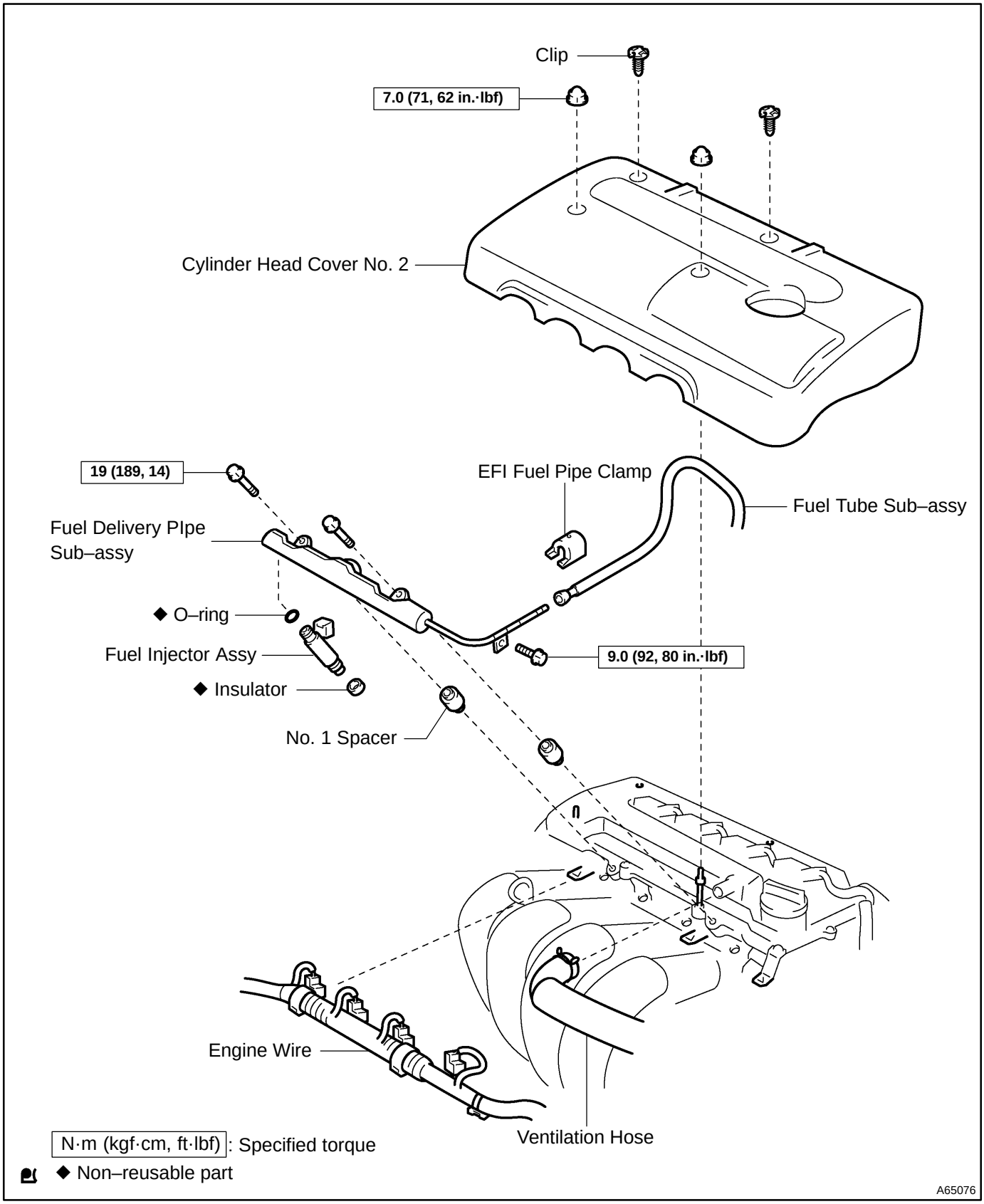

110F3–01

REPLACEMENT

1. WORK FOR PREVENTING GASOLINE FROM SPILLING OUT (See page 11–1)

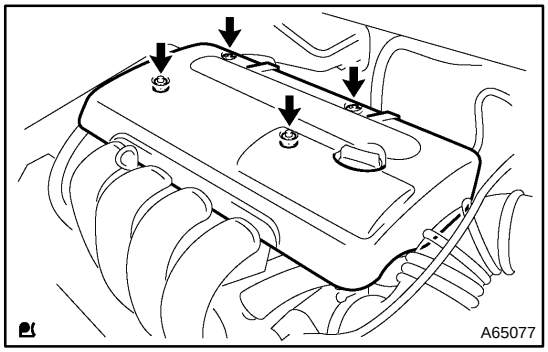

2. REMOVE CYLINDER HEAD COVER NO.2

(a) Remove the 2 nuts, 2 clips and cylinder head cover.

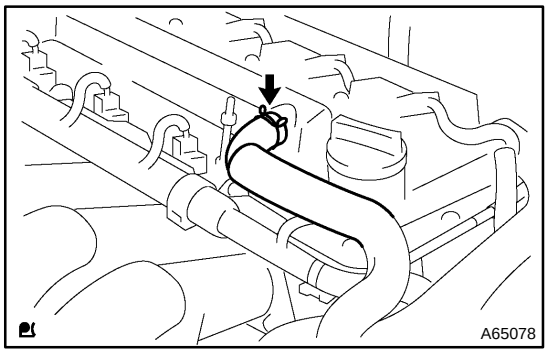

3. DISCONNECT VENTILATION HOSE

(a) Disconnect the ventilation hose from the cylinder head cover.

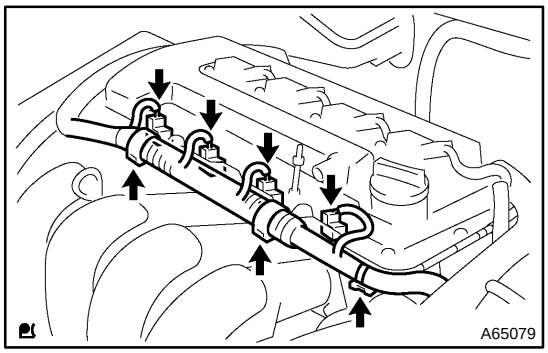

4. DISCONNECT ENGINE WIRE

(a) Disconnect the 4 fuel injector connectors.

(b) Remove the 3 wire harness clamps from the clamp brackets.

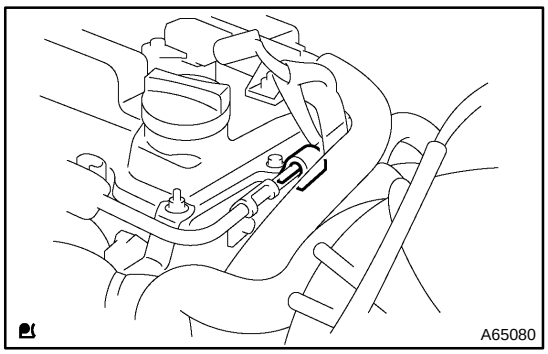

5. REMOVE EFI FUEL PIPE CLAMP

(a) Remove the EFI fuel pipe clamp.

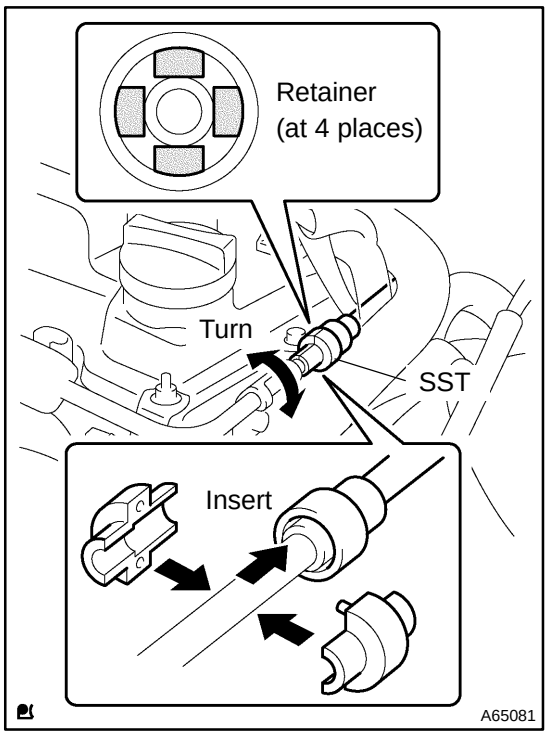

6. DISCONNECT FUEL TUBE SUB–ASSY

(a) Using a SST, disconnect the fuel tube.

SST 09268–21010

(1) Assemble the SST to the connection as shown.

(2) Turn the SST, align the retainers inside the connector with the SST chamfered parts and insert the SST into the connector.

(3) Slide the SST and the connector together towards the fuel tube assembly.

NOTICE:

- **Check if there is dirt mud on the pipe and around the connector before disconnecting them and clean the dirt away.**
- **Do not bent, fold and rotate the nylon tube.**
- **When the connector and the pipe are stuck, push and pull the connector to free to disconnect and pull it out.**
- **Prevent the disconnected pipe and connector from damaging and mixing foreign objects by covering them with a vinyl bag.**

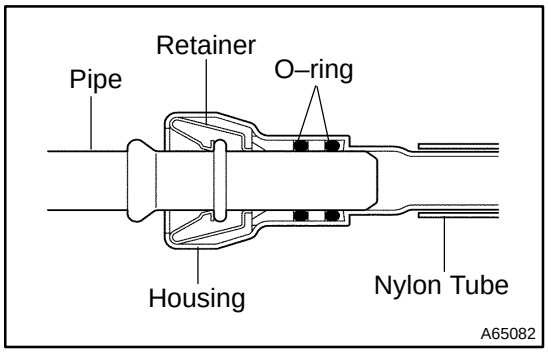

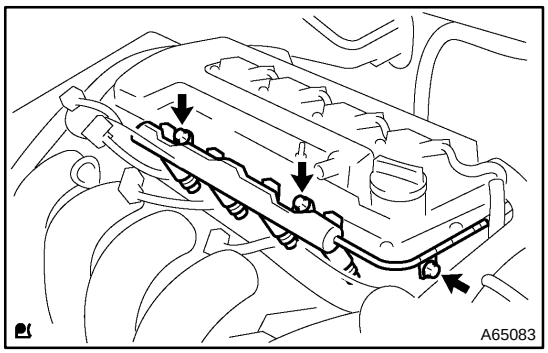

7. REMOVE FUEL DELIVERY PIPE SUB–ASSY

(a) Remove the 3 bolts and fuel delivery pipe together with the 4 fuel injectors.

NOTICE:

Be careful not to drop the fuel injectors when removing the fuel delivery pipe.

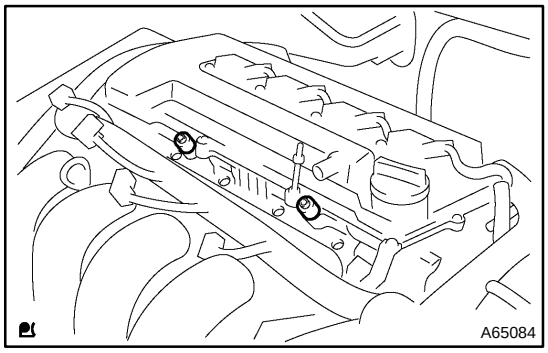

(b) Remove the 2 spacers from the cylinder head.

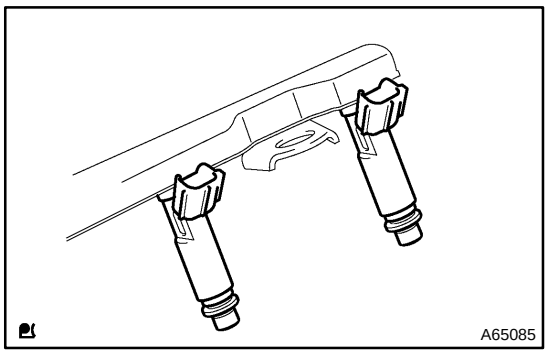

8. REMOVE FUEL INJECTOR ASSY

(a) Pull out the 4 fuel injectors from the fuel delivery pipe.

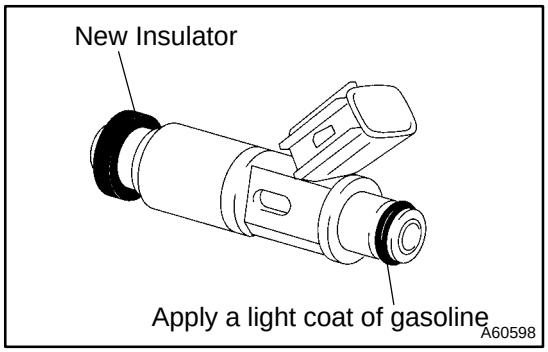

9. INSTALL FUEL INJECTOR ASSY

(a) Install a new insulator to the each fuel injector.

(b) Apply a light coat of spindle oil or gasoline to a new O–ring, and install it to the each fuel injector.

NOTICE:

Never use engine, gear or brake oil.

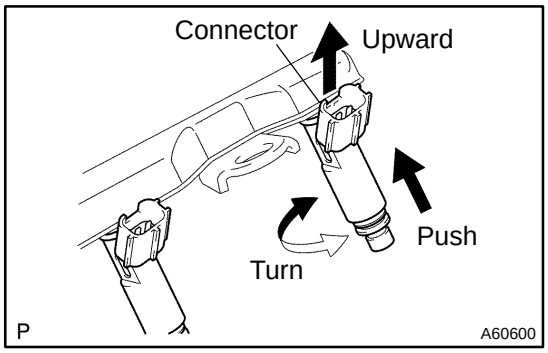

(c) Apply a light coat of spindle oil or gasoline on the place where the fuel delivery pipe touches on the O–ring.

(d) While turning the fuel injector clockwise and counter-clockwise, and push it to the fuel delivery pipe.

NOTICE:

- **Be careful not twist the O–ring.**
- **After installing the fuel injectors, Check that they turns smoothly. If the fuel injector does not, reinstall it with a new O–ring.**

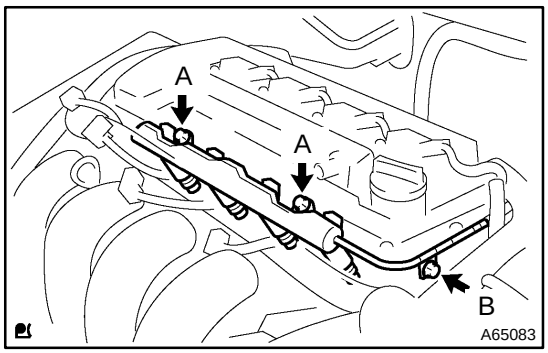

10. INSTALL FUEL DELIVERY PIPE SUB–ASSY

(a) Install the 2 spacers to the cylinder head.

(b) Install the fuel delivery pipe together with the 4 fuel injectors with the 3 bolts.

Torque:

Bolt A 19 N·m (194 kgf·cm, 14 ft·lbf)

Bolt B 9.0 N·m (92 kgf·cm, 80 in.·lbf)

NOTICE:

- **Be careful not drop the fuel injectors when installing the fuel delivery pipe.**
- **Check that the fuel injectors rotate smoothly after installing the fuel delivery pipe.**

11. CONNECT FUEL TUBE SUB–ASSY

(a) Connect the fuel tube to the fuel delivery pipe.

NOTICE:

- **Check if there is any damage or foreign objects on the connected part of the fuel tube.**
- **After connecting, check if the fuel tube and the connector are securely connected by pulling them.**

12. INSTALL CYLINDER HEAD COVER NO.2

(a) Install the cylinder head cover with the 2 nuts and 2 clips.
Torque: 7.0 N·m (71 kgf·cm, 62 in.·lbf)

13. CHECK FUEL LEAK (See page 11–1)

FUEL PUMP ASSY (FF)

COMPONENTS

110EY–01

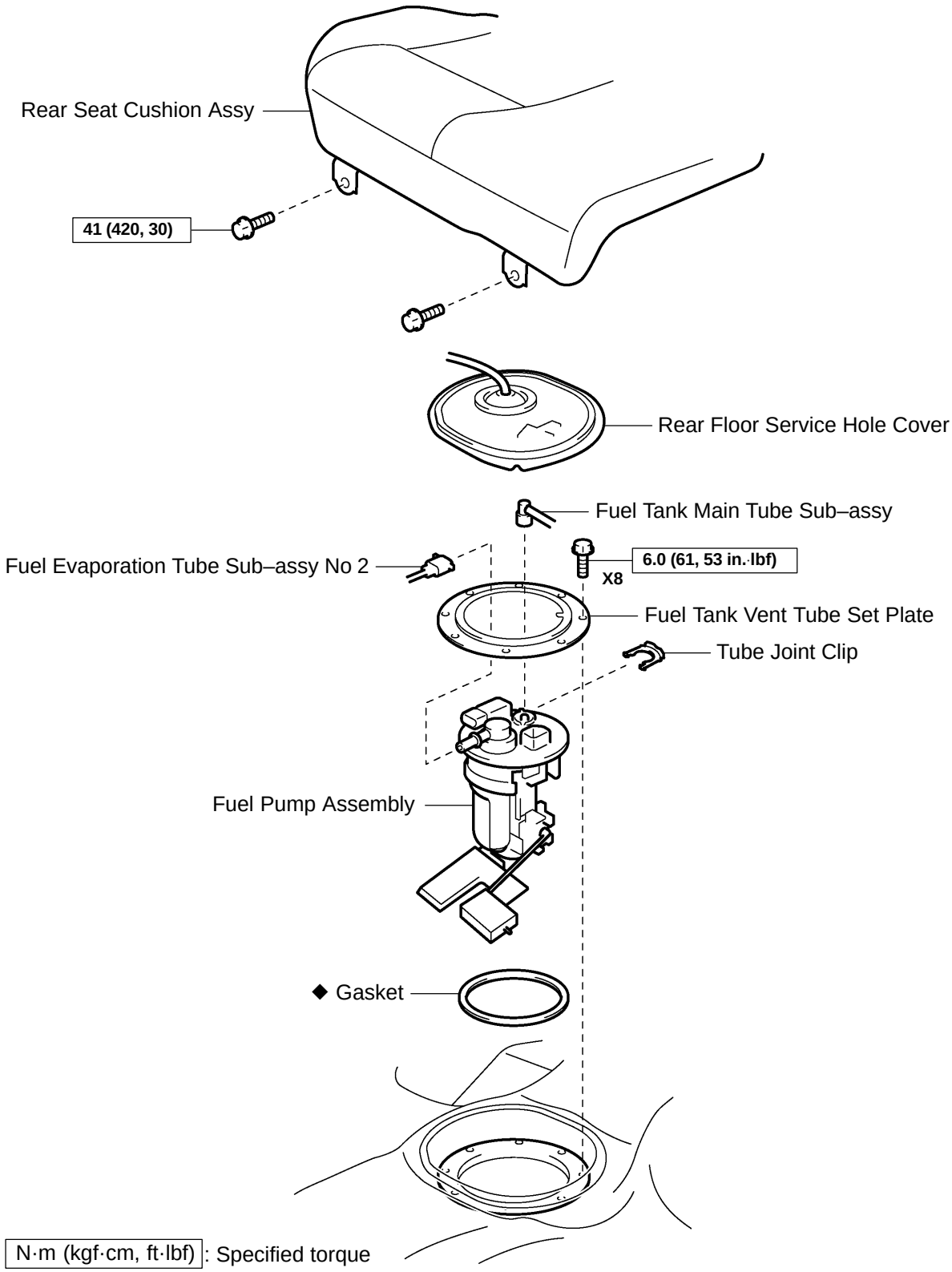

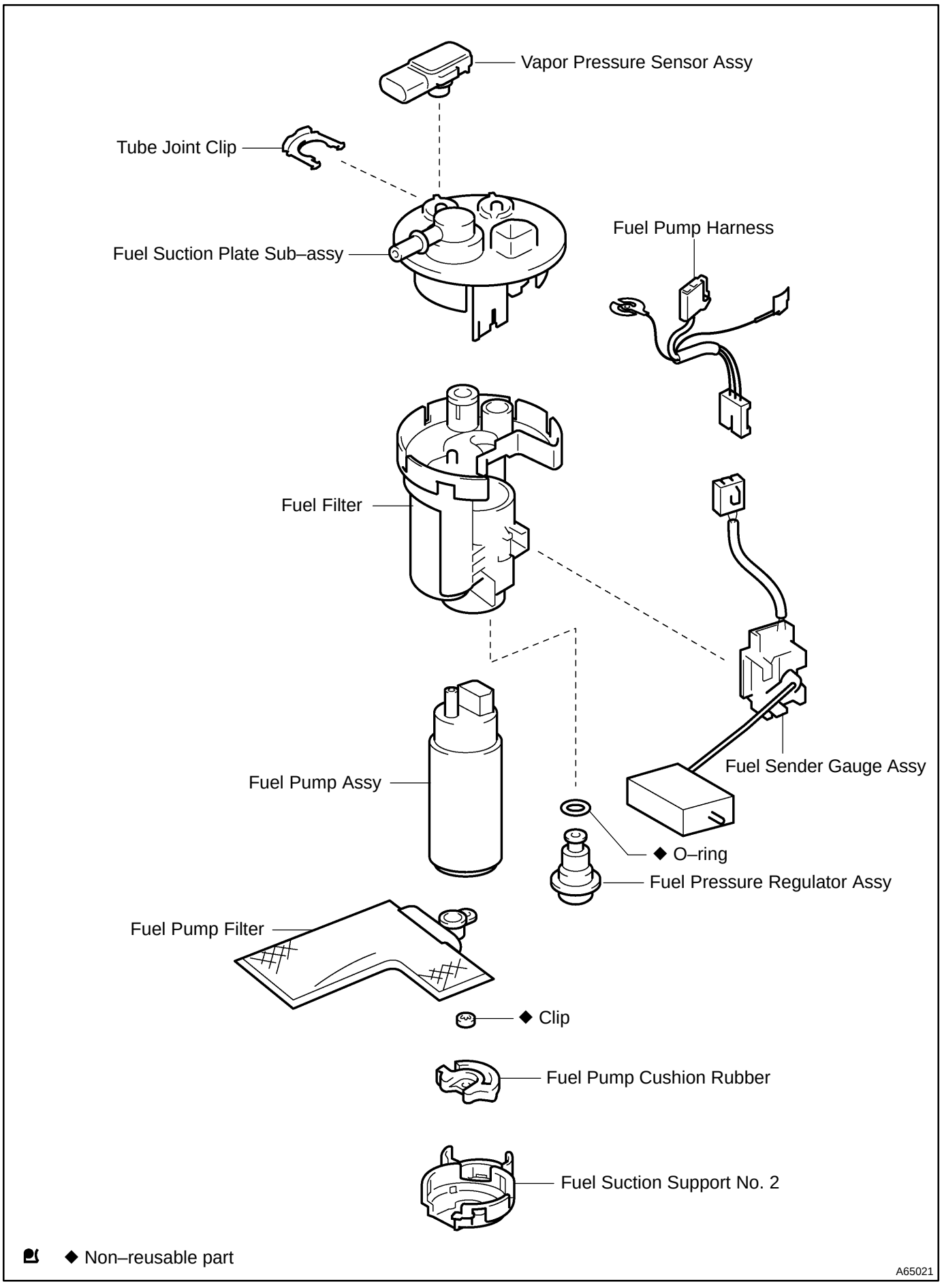
Vapor Pressure Sensor Assy
Tube Joint Clip
Fuel Suction Plate Sub–assy
Fuel Pump Harness
Fuel Filter
Fuel Pump Assy
Fuel Sender Gauge Assy
◆ O–ring
Fuel Pressure Regulator Assy
Fuel Pump Filter
◆ Clip
Fuel Pump Cushion Rubber
Fuel Suction Support No. 2
◆ Non–reusable part
A65021

110EZ–01

Removal & Installation and Disassembly & Reassembly

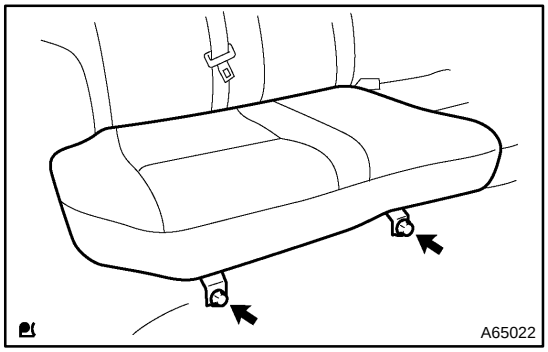

1. REMOVE SEPARATE TYPE REAR SEAT CUSHION ASSY

(a) Remove the 2 installing bolts of the rear seat cushion.

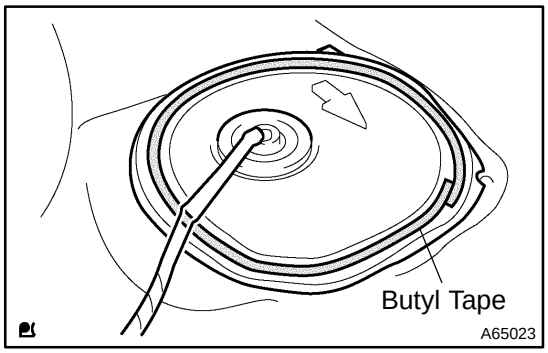

2. REMOVE REAR FLOOR SERVICE HOLE COVER

(a) Remove the rear service hole cover.

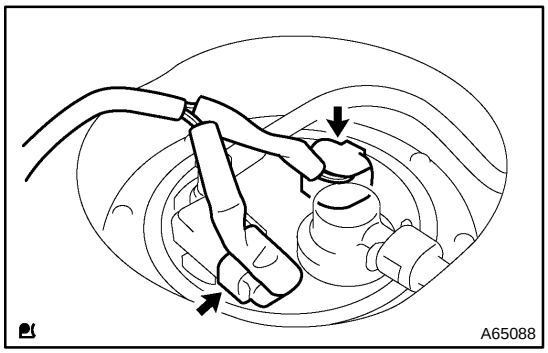

(b) Disconnect the fuel pump and vapor pressure sensor connector.

3. WORK FOR PREVENTING GASOLINE FROM SPILLING OUT

(a) Start the engine.

(b) After the engine has stopped on the its own, turn the ignition switch to lock.

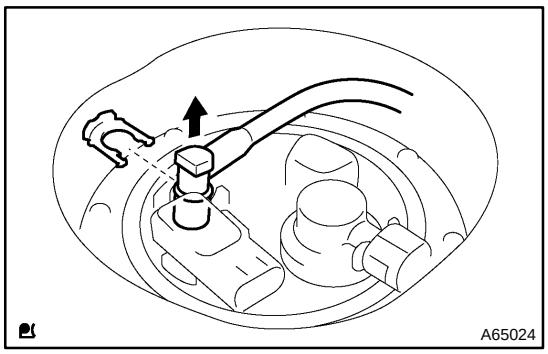

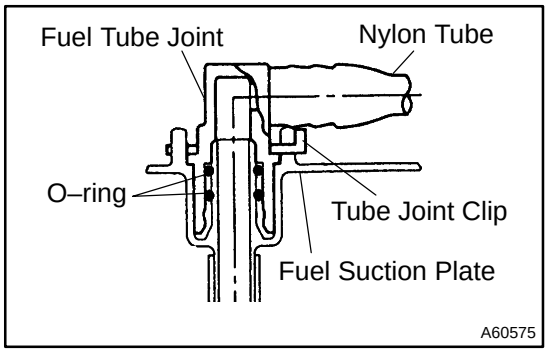

4. DISCONNECT FUEL TANK MAIN TUBE SUB–ASSY

(a) Remove the tube joint clip, and pull out the fuel tank main tube.

NOTICE:

- **Check if there is any dirt like mud around the fuel tube joint before this work and clean dirt away.**
- **Be careful of dirt like mud because the fuel tube joint has an O–ring to seal the fuel tube connector and fuel suction plate.**
- **Do not use any tool in this work.**
- **Do not bend or twist the nylon tube by force.**
- **After disconnecting, cover the fuel tube joint with a vinyl bag.**
- **When the fuel tube joint and fuel suction plate are stuck, pinch the fuel tank main tube between fingers, and turn it carefully to free and then disconnect the fuel tank main tube.**

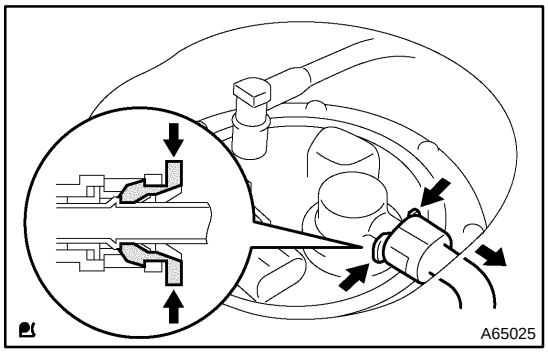

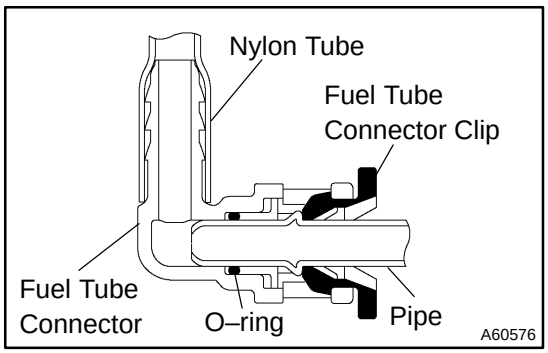

5. DISCONNECT FUEL EMISSION TUBE SUB–ASSY NO.1

(a) Pinch the fuel tube connector clip and then pull out the fuel emission tube.

NOTICE:

- **Check if there is any dirt like mud around the fuel tube connector before this work and clean dirt away.**
- **Be careful of dirt like mud because the fuel tube connector has an O–ring to seal the fuel tube connector and pipe.**
- **Do not use any tool in this work.**
- **Do not bend or twist the nylon tube by force.**
- **After disconnecting, cover the fuel tube connector with a vinyl bag.**
- **When the fuel tube connector and pipe are stuck, pinch the fuel emission tube between fingers, and turn it carefully to free and then disconnect the fuel emission tube.**

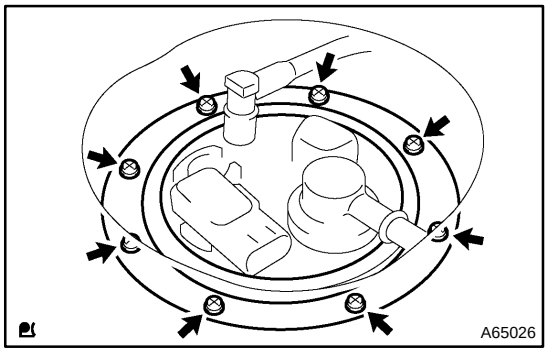

6. REMOVE FUEL TANK VENT TUBE SET PLATE

(a) Remove the 8 bolts and fuel tank vent tube set plate.

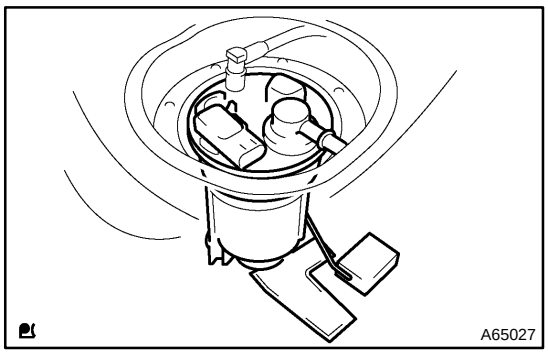

7. REMOVE FUEL PUMP ASSEMBLY

(a) Pull out the fuel pump assembly.

NOTICE:

- **Do not damage the fuel pump filter.**
- **Be careful that the arm of the fuel sender gauge should not bent.**

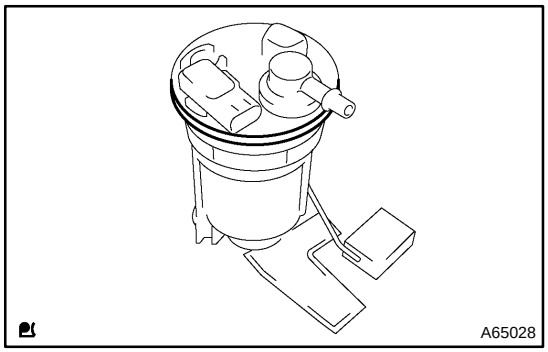

8. REMOVE FUEL SUCTION TUBE SET GASKET

(a) Remove the gasket from the fuel pump assembly.

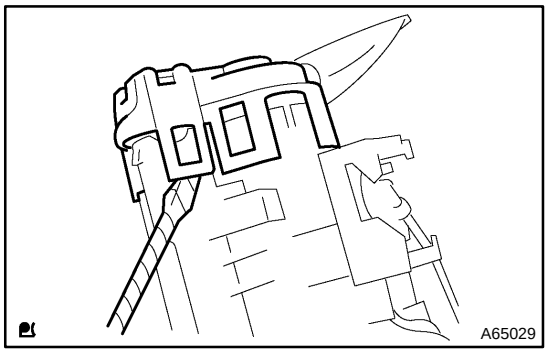

9. REMOVE FUEL SUCTION SUPPORT NO.2

(a) Using a screwdriver, disconnect the 5 snap claws from the claw holes, and remove the fuel suction support.

NOTICE:

Do not damage the fuel suction support.

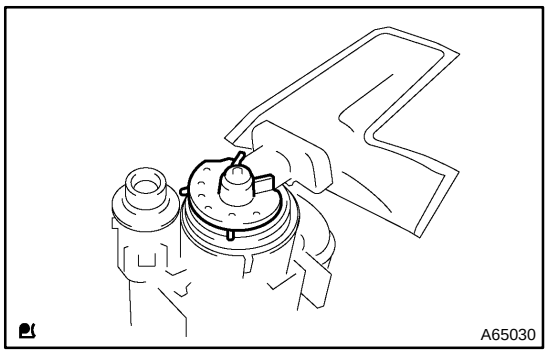

10. REMOVE FUEL PUMP CUSHION RUBBER

(a) Remove the fuel pump cushion rubber.

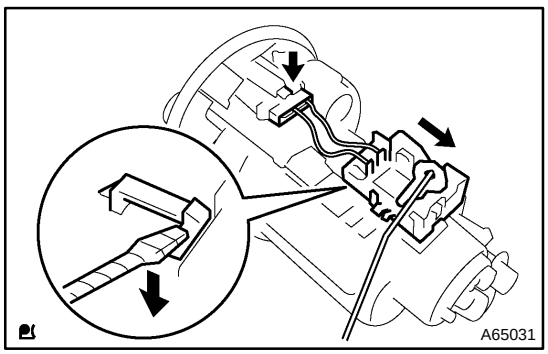

11. REMOVE FUEL SENDER GAGE ASSY

(a) Disconnect the fuel sender gage connector.

(b) Using a screwdriver, unlock the fuel sender gage, and slide it remove.

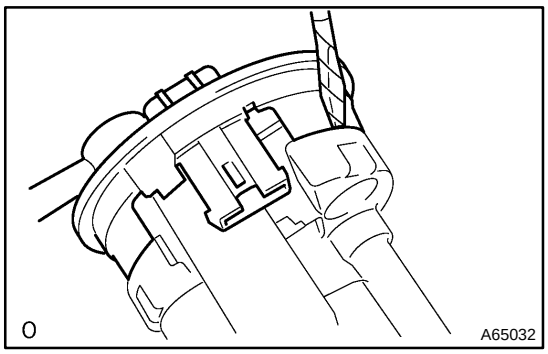

12. REMOVE FUEL SUCTION PLATE SUB–ASSY

(a) Disconnect the fuel pump connector.

(b) Using a screwdriver, disconnect the 4 snap claws from the claw holes, and remove the fuel suction plate.

NOTICE:

Do not damage the fuel suction plate.

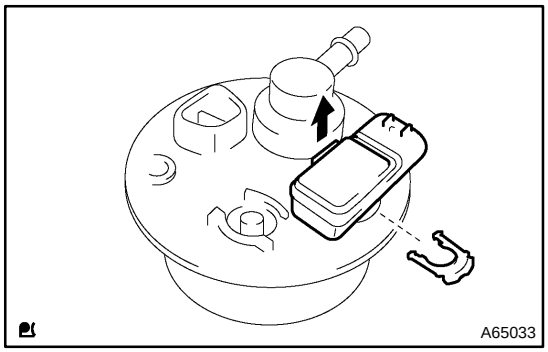

13. REMOVE VAPOR PRESSURE SENSOR ASSY

(a) Remove the tube joint clip, and pull out the vapor pressure sensor.

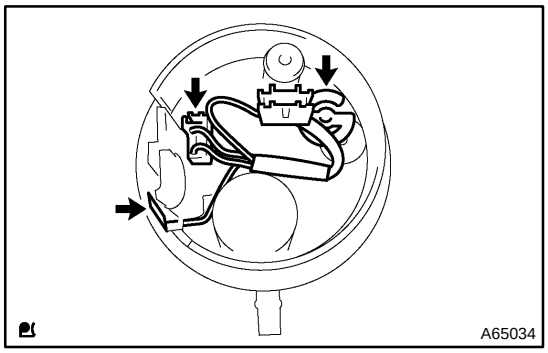

14. REMOVE FUEL PUMP HARNESS

(a) Remove the fuel pump harness from the fuel suction plate.

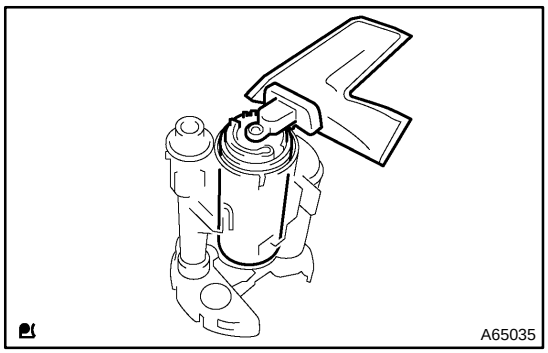

15. REMOVE FUEL PUMP

(a) Pull out the fuel pump from the fuel filter.

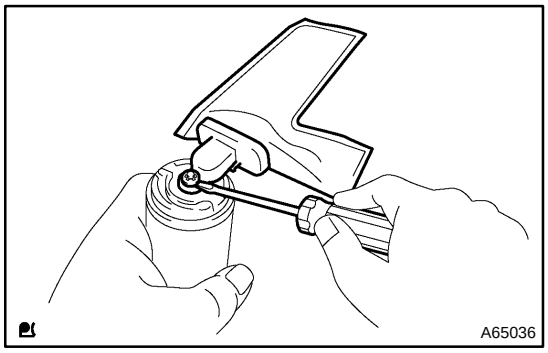

16. REMOVE FUEL PUMP FILTER

(a) Using a small screwdriver, pry out the clip.

(b) Pull out the fuel pump filter from the fuel pump.

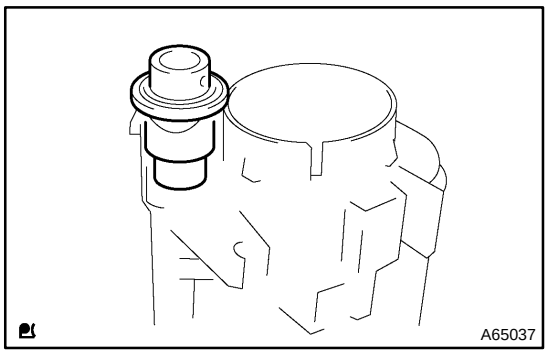

17. REMOVE FUEL PRESSURE REGULATOR ASSY

(a) Pull out the fuel pressure regulator from the fuel filter.

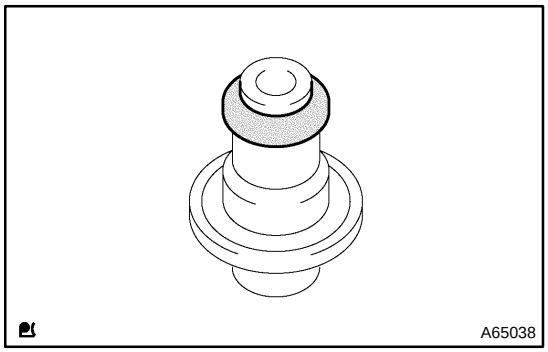

18. REMOVE FUEL PRESSURE REGULATOR O–RING

(a) Remove an O–ring from the fuel pressure regulator.

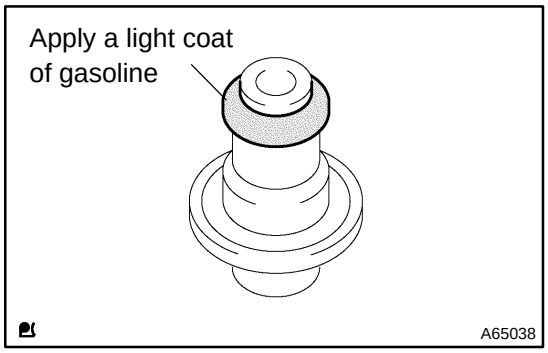

19. INSTALL FUEL PRESSURE REGULATOR O–RING

(a) Apply a light coat of gasoline to a new O–ring, and install it to the fuel pressure regulator.

20. INSTALL FUEL PUMP FILTER

(a) Install the fuel pump filter with a new clip.

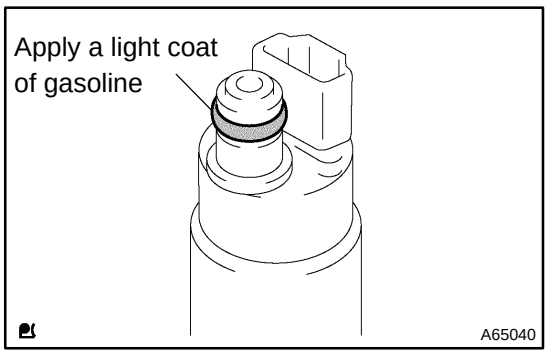

21. INSTALL FUEL PUMP

(a) Apply a light coat of gasoline to an O–ring, and install the fuel pump to the fuel filter.

22. INSTALL VAPOR PRESSURE SENSOR ASSY

(a) Install the vapor pressure sensor with the tube joint clip.

NOTICE:

- **Check that there is no scratch or foreign objects on the connecting parts.**
- **Check that the fuel tube joint is inserted fully and securely.**
- **Check that the tube joint clip is on the collar of the fuel tube joint.**
- **After installing the tube joint clip, check that the fuel tube joint connector is not pulled off.**

23. INSTALL FUEL SUCTION TUBE SET GASKET

(a) Install a new gasket to the fuel pump assembly.

24. INSTALL FUEL PUMP ASSEMBLY

(a) Install the fuel pump assembly to the fuel tank.

NOTICE:

- **Do not damage the fuel pump filter.**
- **Be careful that the arm of the fuel sender gauge should not bent.**

25. INSTALL FUEL TANK VENT TUBE SET PLATE

(a) Install the fuel tank vent tube set plate with the 8 bolts.

Torque: 6.0 N·m (61 kgf·cm, 53 in.·lbf)

26. CONNECT FUEL EMISSION TUBE SUB–ASSY NO.1

(a) Push in the fuel emission tube to the pipe until fuel tube connector makes ”click” sound.

NOTICE:

- **Check if there is any damage or foreign objects on the connected part.**
- **After connecting, check if the pipe and fuel tube connector are securely connected by pulling them.**

27. CONNECT FUEL TANK MAIN TUBE SUB–ASSY

(a) Connect the fuel tank main tube with the tube joint clip.

NOTICE:

- **Check that there is no scratch or foreign objects on the connecting parts.**
- **Check that the fuel tube joint is inserted fully and securely.**
- **Check that the tube joint clip is on the collar of the fuel tube joint.**
- **After installing the tube joint clip, check that the fuel tube joint is not pulled off.**

28. CHECK FUEL LEAK (See page 11–1)

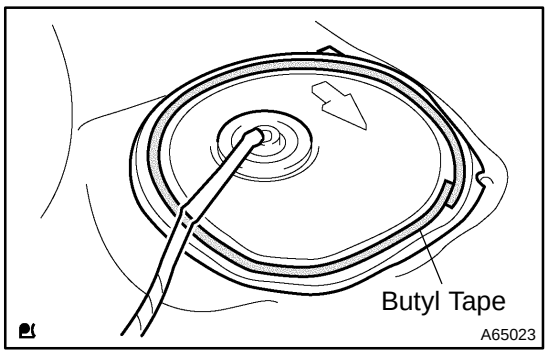

29. INSTALL REAR FLOOR SERVICE HOLE COVER

(a) Using the butyl tape, install the rear floor service hole cover.

30. INSTALL SEPARATE TYPE REAR SEAT CUSHION ASSY

(a) Install the rear seat cushion with the 2 bolts.

Torque: 41 N·m (420 kgf·cm, 30 ft·lbf)

FUEL TANK ASSY (FF)

COMPONENTS

110EU–01

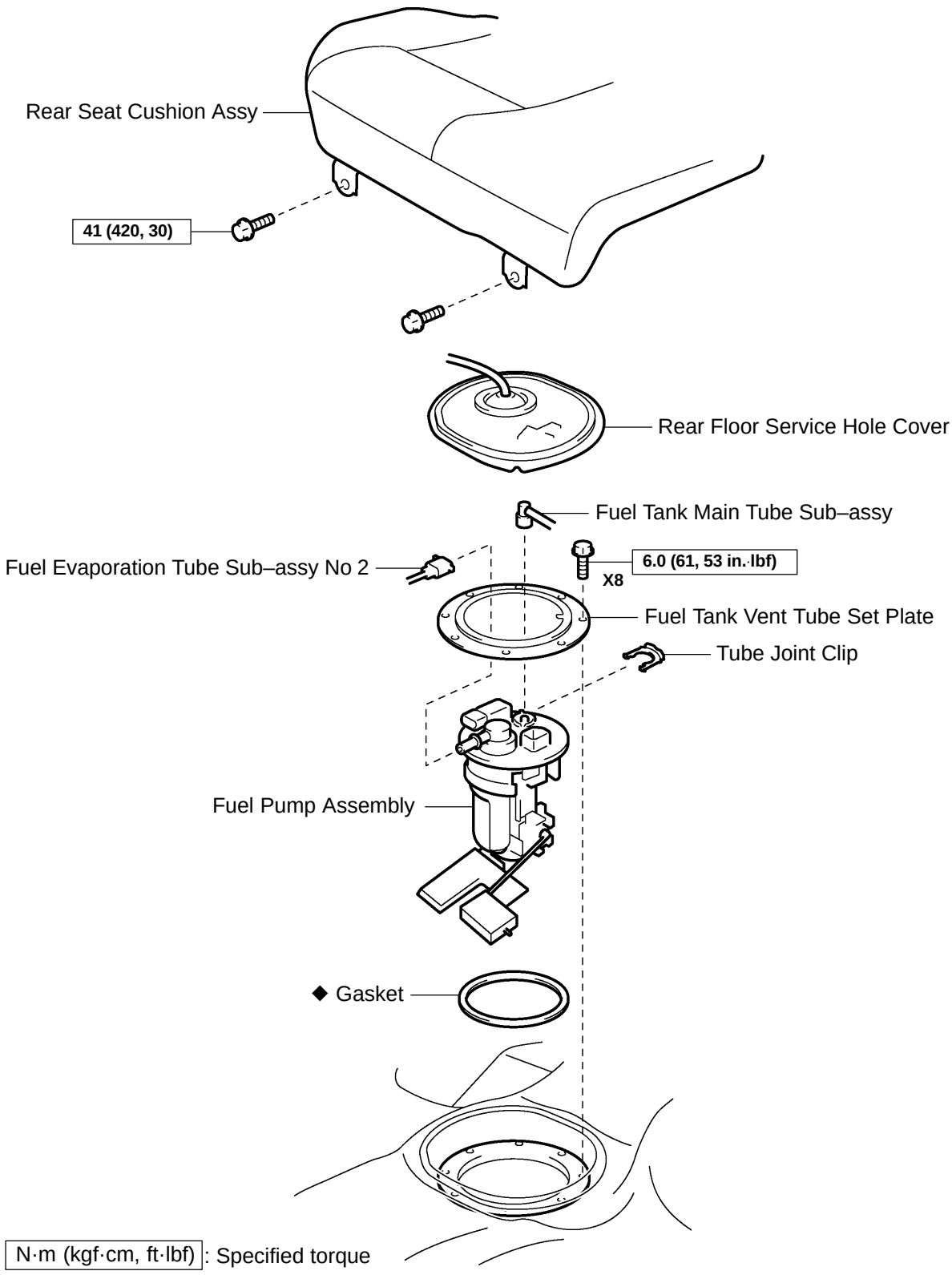

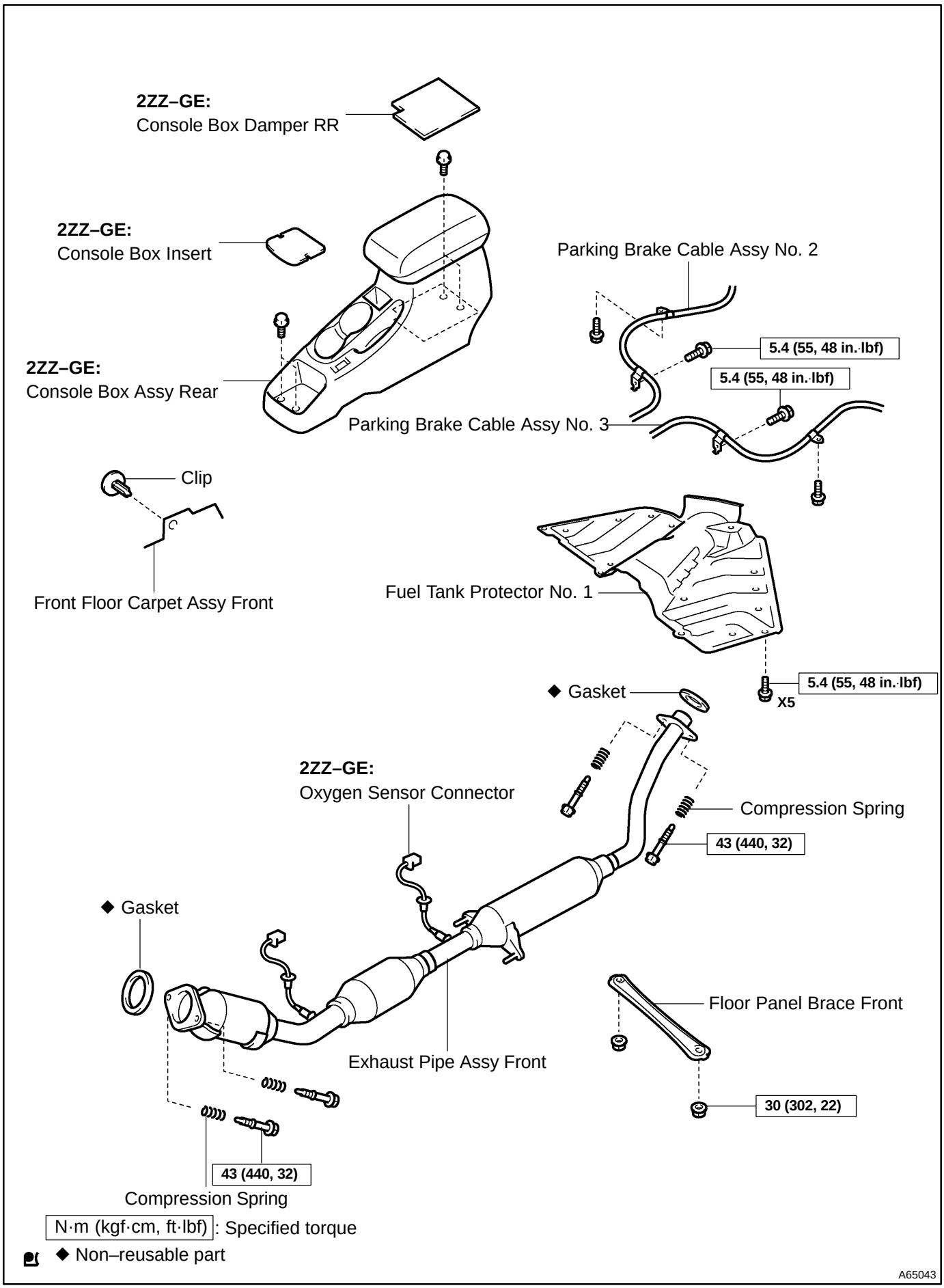
2ZZ–GE:
Console Box Damper RR
2ZZ–GE:
Console Box Insert
2ZZ–GE:
Console Box Assy Rear
Parking Brake Cable Assy No. 2
5.4 (55, 48 in.·lbf)
5.4 (55, 48 in.·lbf)
Parking Brake Cable Assy No. 3
Clip
Front Floor Carpet Assy Front
Fuel Tank Protector No. 1
5.4 (55, 48 in.·lbf)
X5
◆ Gasket
2ZZ–GE:
Oxygen Sensor Connector
Compression Spring
43 (440, 32)
◆ Gasket
Floor Panel Brace Front
Exhaust Pipe Assy Front
30 (302, 22)
43 (440, 32)
Compression Spring
N·m (kgf·cm, ft·lbf): Specified torque
◆ Non–reusable part
A65043

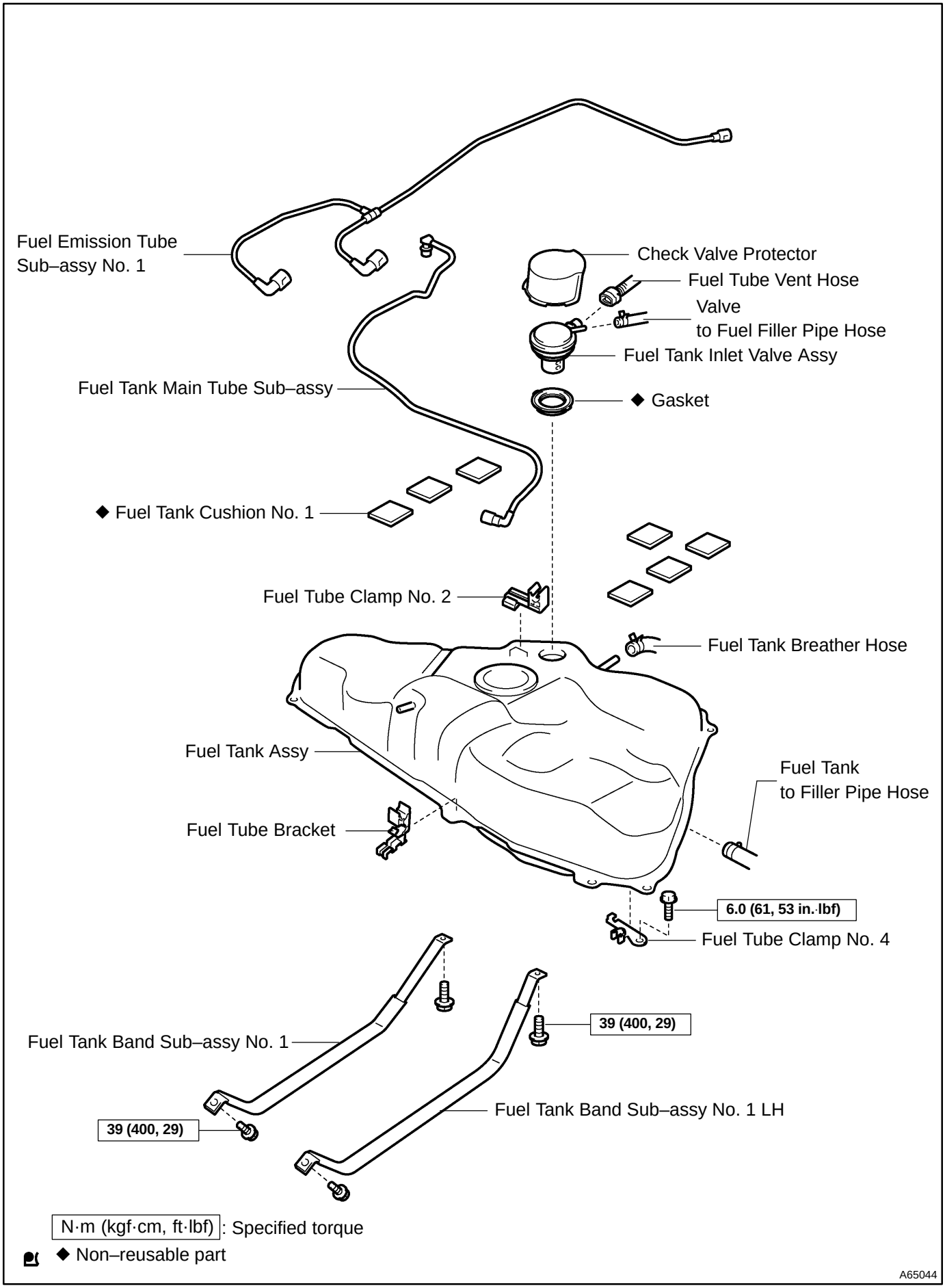
Fuel Emission Tube Sub–assy No. 1
Check Valve Protector
Fuel Tube Vent Hose
Valve to Fuel Filler Pipe Hose
Fuel Tank Inlet Valve Assy
Fuel Tank Main Tube Sub–assy
◆ Gasket
◆ Fuel Tank Cushion No. 1
Fuel Tube Clamp No. 2
Fuel Tank Breather Hose
Fuel Tank Assy
Fuel Tank to Filler Pipe Hose
Fuel Tube Bracket
6.0 (61, 53 in.·lbf)
Fuel Tube Clamp No. 4
39 (400, 29)
Fuel Tank Band Sub–assy No. 1
39 (400, 29)
Fuel Tank Band Sub–assy No. 1 LH
N·m (kgf·cm, ft·lbf): Specified torque
◆ Non–reusable part
A65044

110EV–01

Removal & Installation and Disassembly & Reassembly

1. REMOVE SEPARATE TYPE REAR SEAT CUSHION ASSY (See page 11–21)

2. REMOVE REAR FLOOR SERVICE HOLE COVER (See page 11–21)

3. WORK FOR PREVENTING GASOLINE FROM SPILLING OUT

(a) Start the engine.

(b) After the engine has stopped on the its own, turn the ignition switch to lock.

4. DISCONNECT FUEL TANK MAIN TUBE SUB–ASSY (See page 11–21)

5. DISCONNECT FUEL EMISSION TUBE SUB–ASSY NO.1 (See page 11–21)

6. REMOVE FUEL TANK VENT TUBE SET PLATE (See page 11–21)

7. REMOVE FUEL PUMP ASSEMBLY (See page 11–21)

8. REMOVE FUEL SUCTION TUBE SET GASKET (See page 11–21)

9. DRAIN FUEL

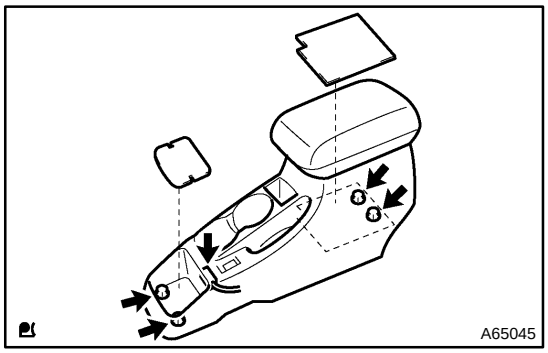

10. REMOVE CONSOLE BOX ASSY REAR (2ZZ–GE ENGINE TYPE)

(a) Remove the console box insert.

(b) Remove the console box damper.

(c) Remove the 4 bolts.

(d) Disconnect the power point socket connector, and remove the console box.

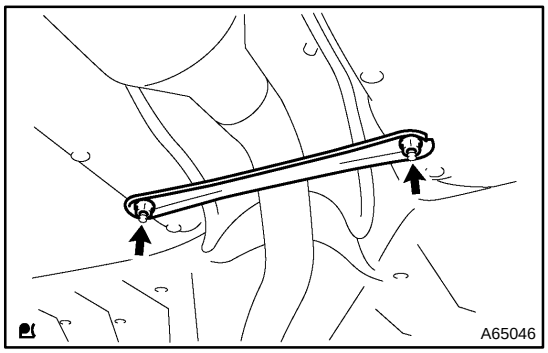

11. REMOVE FLOOR PANEL BRACE FRONT

(a) Remove the 2 nuts and floor panel brace front.

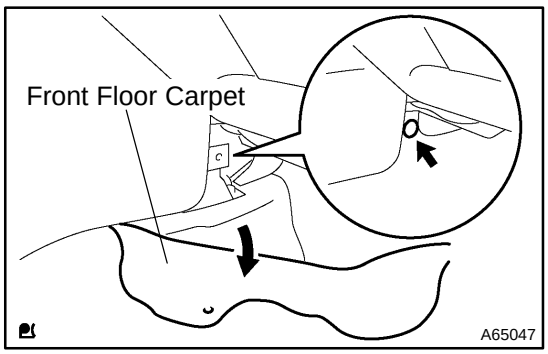

12. REMOVE EXHAUST PIPE ASSY FRONT

(a) Using a clip remover, remove the clip.

(b) Tear off the front floor carpet.

(c) 1ZZ–FE:
  (1) Disconnect the oxygen sensor connector.
(d) 2ZZ–GE:
  (1) Disconnect the 2 oxygen sensor connectors.
(e) Remove the 2 exhaust pipe supports.
(f) Remove the 4 bolts, 4 compression springs and exhaust pipe.

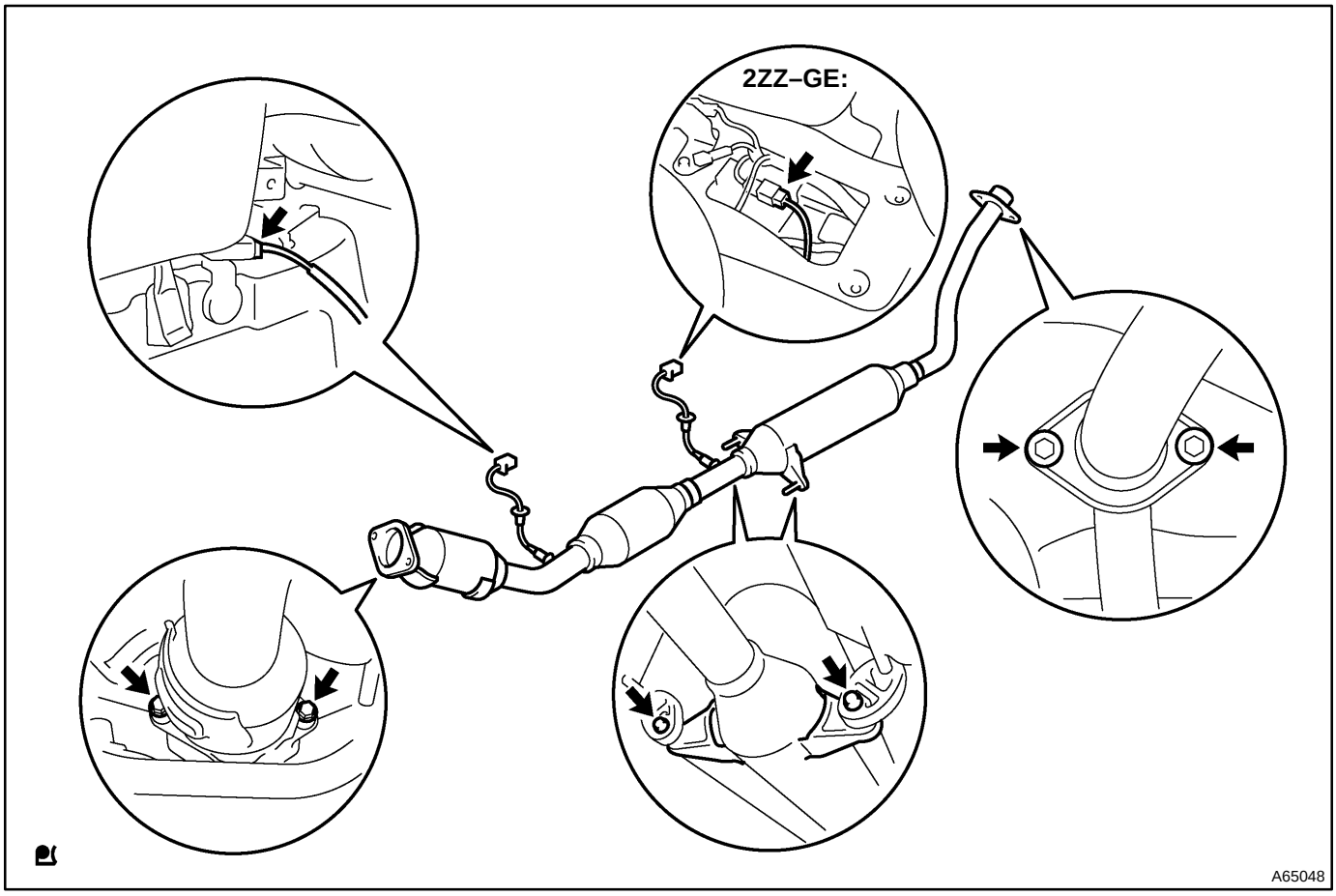

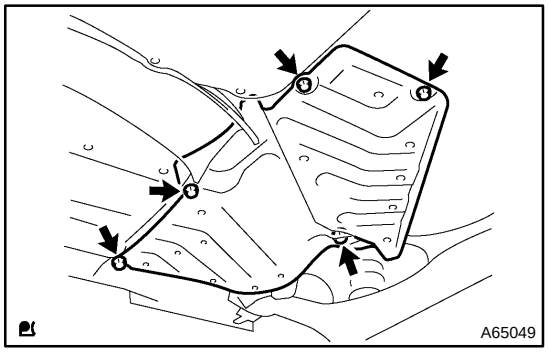

13. REMOVE FUEL TANK PROTECTOR NO.1

(a) Remove the 5 bolts and fuel tank protector.

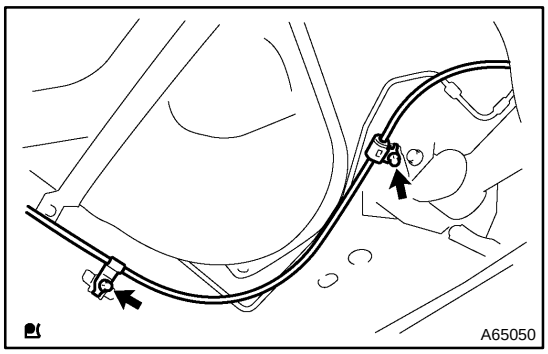

14. SEPARATE PARKING BRAKE CABLE ASSY NO.2

(a) Remove the 2 installing bolts of the parking brake cable.

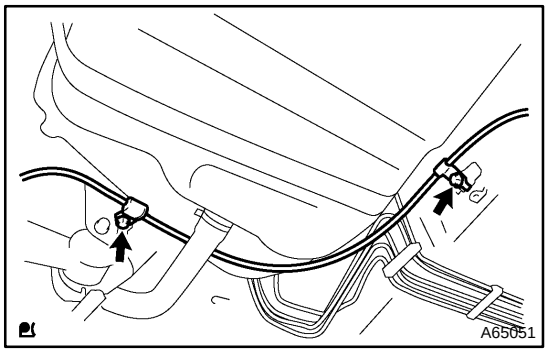

15. SEPARATE PARKING BRAKE CABLE ASSY NO.3

(a) Remove the 2 installing bolts of the parking brake cable.

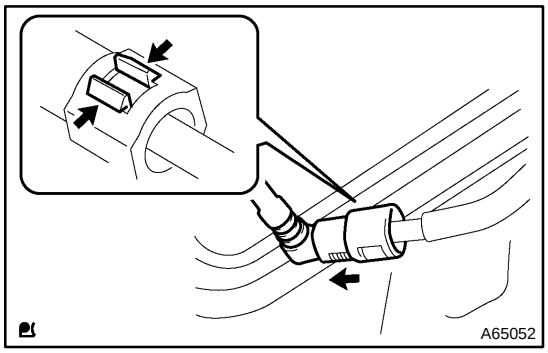

16. DISCONNECT FUEL TANK MAIN TUBE SUB–ASSY

(a) Pinch the fuel tube connector clip, and remove the fuel tube connector clip.

(b) Pull out the fuel tank main tube.

NOTICE:

- **Check if there is any dirt like mud around the fuel tube connector before this work and clean the dirt away.**
- **Be careful of dirt like mud because the fuel tube connector has an O–ring to seal the fuel tube connector and pipe.**
- **Do not use any tool in this work.**
- **Do not bend or twist the nylon tube by force.**
- **After disconnecting, cover the fuel tube connector with a vinyl bag.**
- **When the fuel tube connector and pipe are stuck, pinch the fuel tank main tube between fingers, and turn it carefully to free and then disconnect the fuel tank main tube.**

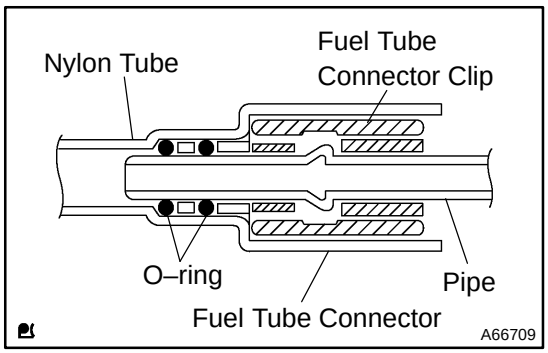

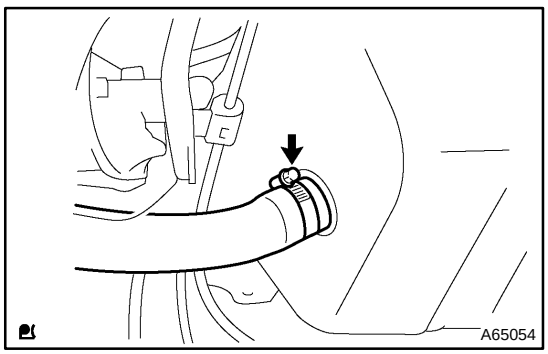

17. DISCONNECT FUEL TANK INLET PIPE FUEL HOSE

(a) Disconnect the fuel tank inlet filler pipe hose from the fuel tank.

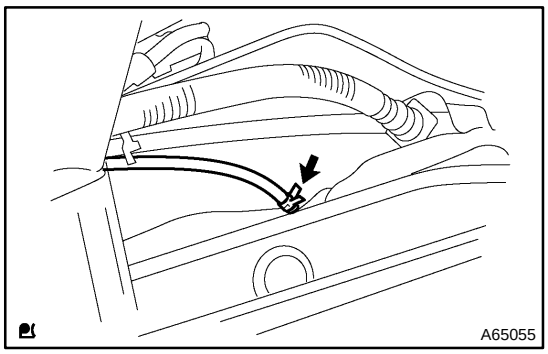

18. DISCONNECT FUEL TANK BREATHER HOSE

(a) Disconnect the fuel tank breather hose from the fuel tank.

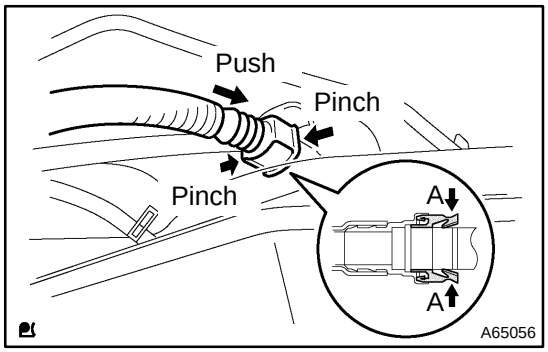

19. DISCONNECT FUEL TANK VENT HOSE

(a) Disconnect the fuel tank bent hose from the charcoal canister.
   (1) Push the connector deep inside.
   (2) Pinch portion A.
   (3) Pull out the connector.

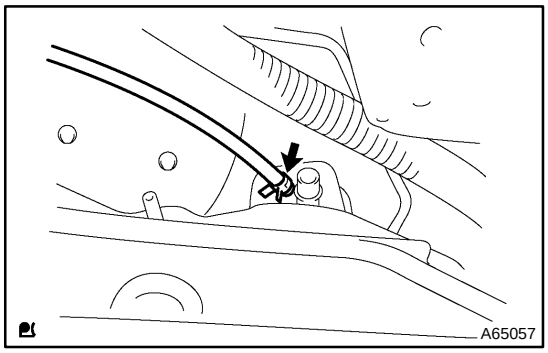

20. DISCONNECT VALVE TO FUEL FILLER PIPE HOSE

(a) Disconnect the valve to fuel filler pipe hose from the fuel tank inlet pipe.

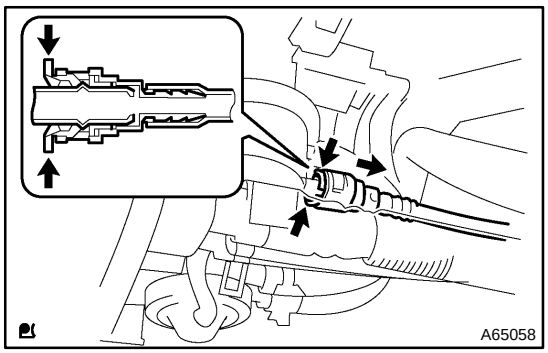

21. DISCONNECT FUEL EMISSION TUBE SUB–ASSY NO.1

(a) Pinch the fuel tube connector clip and then pull out the fuel emission tube.

NOTICE:

- **Check if there is any dirt like mud around the fuel tube connector before this work and clean the dirt away.**
- **Be careful of dirt like mud because the fuel tube connector has an O–ring to seal the fuel tube connector and pipe.**
- **Do not use any tool in this work.**
- **Do not bend or twist the nylon tube by force.**
- **After disconnecting, cover the fuel tube connector with a vinyl bag.**
- **When the fuel tube connector and pipe are stuck, pinch the fuel emission tube between fingers, and turn it carefully to free and then disconnect the fuel emission tube.**

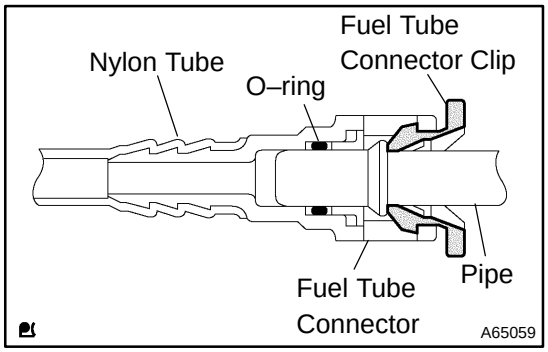

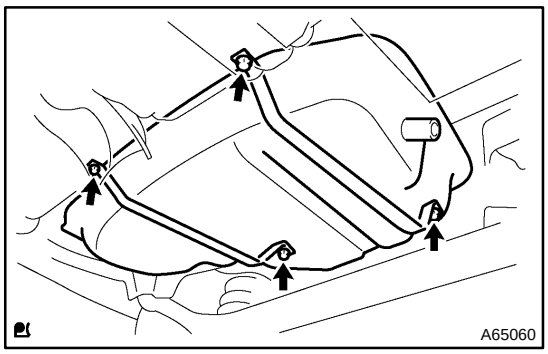

22. REMOVE FUEL TANK ASSY

(a) Set a mission jack to the fuel tank.

(b) Remove the 4 bolts, 2 fuel tank bands and fuel tank.

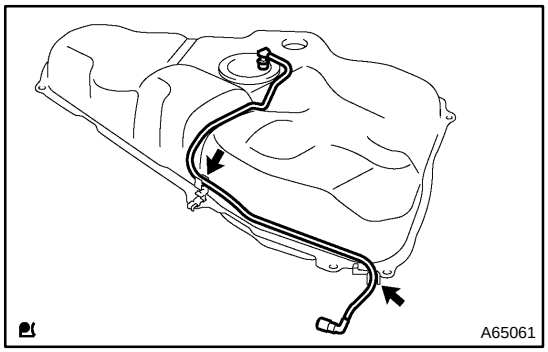

23. REMOVE FUEL TANK MAIN TUBE SUB–ASSY

(a) Remove the fuel tank main tube from the fuel tube clamp and bracket.

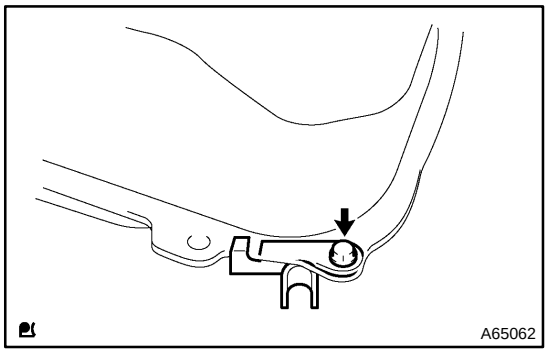

24. REMOVE FUEL TUBE CLAMP NO.4

(a) Remove the bolt and fuel tank clamp.

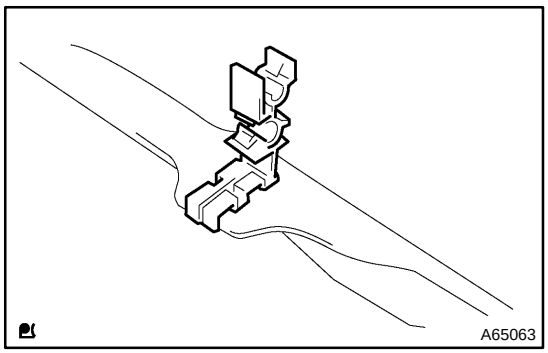

25. REMOVE FUEL TUBE BRACKET

(a) Remove the fuel tube bracket from the fuel tank.

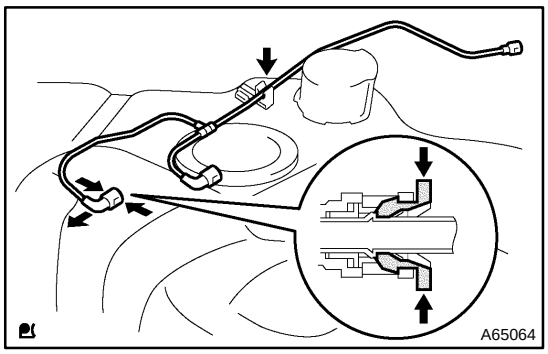

26. REMOVE FUEL EMISSION TUBE SUB–ASSY NO.1

(a) Pinch the fuel tube connector clip and then pull out the fuel emission tube.

NOTICE:

- **Check if there is any dirt like mud around the fuel tube connector before this work and clean the dirt away.**
- **Be careful of dirt like mud because the fuel tube connector has an O–ring to seal the fuel tube connector and pipe.**
- **Do not use any tool in this work.**
- **Do not bend or twist the nylon tube by force.**
- **After disconnecting, cover the fuel tube connector with a vinyl bag.**
- **When the fuel tube connector and pipe are stuck, pinch the fuel emission tube between fingers, and turn it carefully to free and then disconnect the fuel emission tube.**

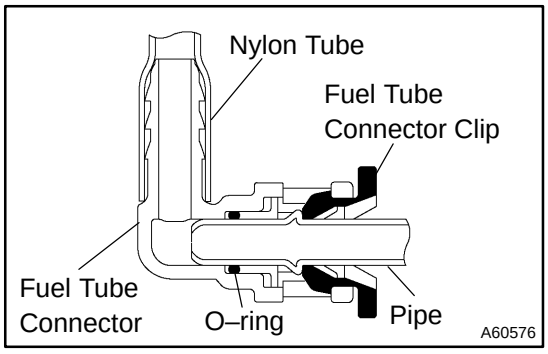

27. REMOVE FUEL TUBE CLAMP NO.2

(a) Remove the fuel tube clamp from the fuel tank.

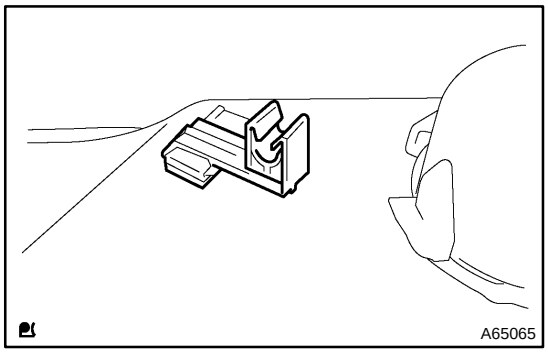

28. REMOVE CHECK VALVE PROTECTOR

(a) Using a screwdriver, unlock the claw, and remove the check valve protector by turning it counter clockwise.

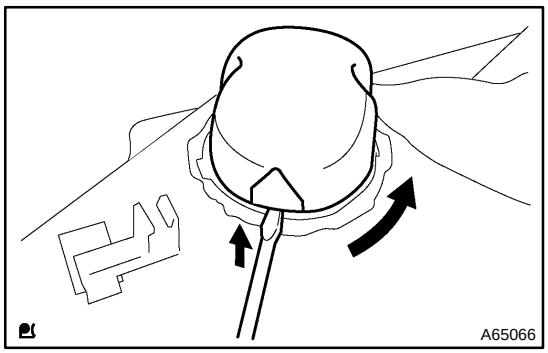

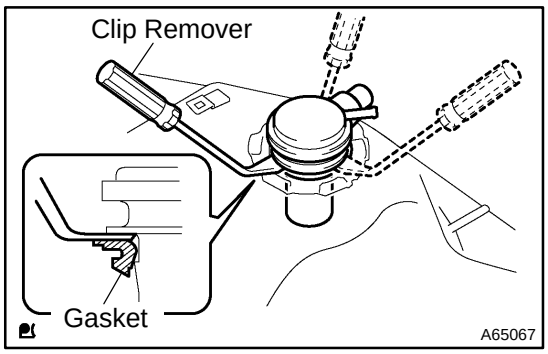

29. REMOVE FUEL TANK INLET VALVE ASSY

(a) Insert a clip remover between the fuel tank inlet valve and gasket, remove the fuel tank inlet valve by gradually pushing it upward.

NOTICE:

- **Work accurately to maintain the sealing performance of the fuel tank inlet valve, since it is made from resin. It is easy to damage by removing and installing forcibly.**
- **Be sure to install a new fuel tank inlet valve and gasket.**

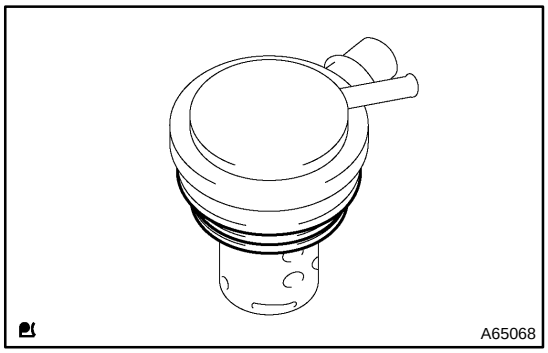

30. REMOVE CHECK VALVE GASKET

(a) Remove the gasket from the fuel tank inlet valve.

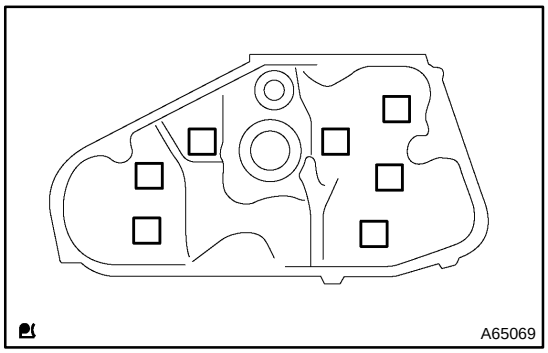

31. REMOVE FUEL TANK CUSHION NO.1

(a) Remove the 7 fuel tank cushions from the fuel tank.

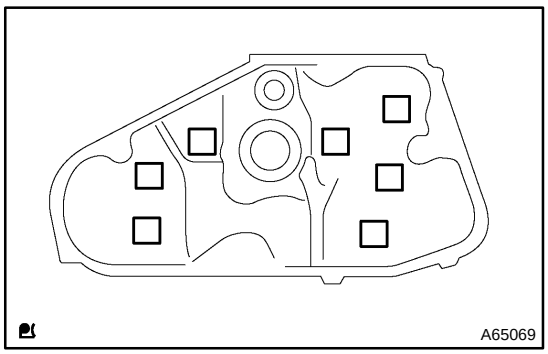

32. INSTALL FUEL TANK CUSHION NO.1

(a) Install the 7 new fuel tank cushions to the fuel tank.

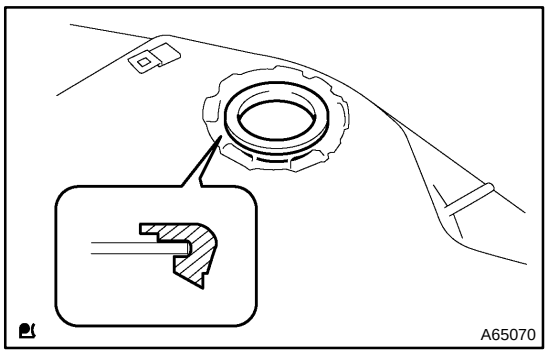

33. INSTALL CHECK VALVE GASKET

(a) Install a new gasket to the fuel tank.

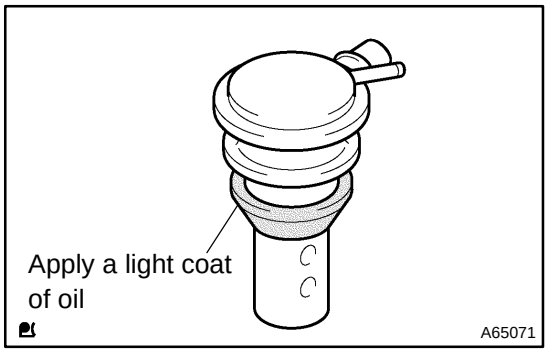

34. INSTALL FUEL TANK INLET VALVE ASSY

(a) Apply a light coat of oil around the fuel tank inlet valve as shown in the illustration, and insert it into the fuel tank without force.

NOTICE:

Be careful not to drop the gasket into the fuel tank.

35. INSTALL FUEL EMISSION TUBE SUB–ASSY NO.1

(a) Push in the fuel tube connector to the pipe until fuel tube connector makes ”click” sound.

NOTICE:

- **Check if there is any damage or foreign objects on the connected part.**
- **After connecting, check if the pipe and fuel tube connector are securely connected by pulling them.**

36. INSTALL FUEL TUBE CLAMP NO.4

(a) Install the fuel tube clamp with the bolt.

Torque: 6.0 N·m (61 kgf·cm, 53 in.·lbf)

37. INSTALL FUEL TANK ASSY

(a) Set a mission jack to the fuel tank.

(b) Install the fuel tank and 2 fuel tank bands with the 4 bolts.

Torque: 39 N·m (400 kgf·cm, 29 ft·lbf)

38. CONNECT FUEL EMISSION TUBE SUB–ASSY NO.1

(a) Push in the fuel tube connector to the pipe until fuel tube connector makes ”click” sound.

NOTICE:

- **Check if there is any damage or foreign objects on the connected part.**
- **After connecting, check if the fuel tube connector and pipe are securely connected by pulling them.**

39. CONNECT FUEL TANK MAIN TUBE SUB–ASSY

(a) Push in the fuel tube connector to pipe until fuel tube connector, and install the fuel tube connector clip.

NOTICE:

- **Check if there is any damage or foreign objects on the connected part.**
- **After connecting, check if the fuel tube connector and pipe are securely connected by pulling them.**

40. INSTALL PARKING BRAKE CABLE ASSY NO.3

(a) Install the parking brake cable with the 2 bolts.

Torque: 5.4 N·m (55 kgf·cm, 48 in.·lbf)

41. INSTALL PARKING BRAKE CABLE ASSY NO.2

(a) Install the parking brake cable with the 2 bolts.
Torque: 5.4 N·m (55 kgf·cm, 48 in.·lbf)

42. INSTALL FUEL TANK PROTECTOR NO.1

(a) Install the fuel tank protector with the 5 bolts.
Torque: 5.4 N·m (55 kgf·cm, 48 in.·lbf)

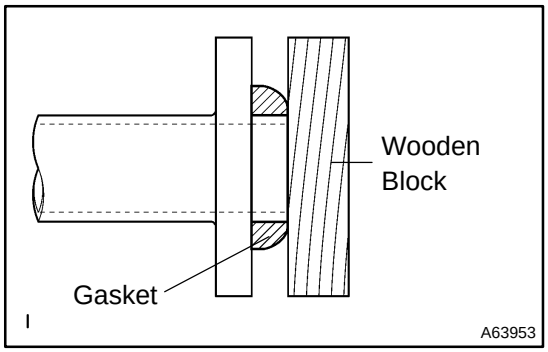

43. INSTALL EXHAUST PIPE ASSY FRONT

(a) Using vernier calipers, measure the free length of the compression spring.
Free length:
Front side 43mm (1.6929 in.)
Rear side 40mm (1.5748 in.)

(b) Using a hammer and wooden block, tap in a new gasket until its surface is flush with the exhaust manifold.

NOTICE:

- **Tap in the gasket in the correct direction.**
- **Do not reuse the removed gasket.**
- **Be sure not to push in the gasket by installing the exhaust pipe.**

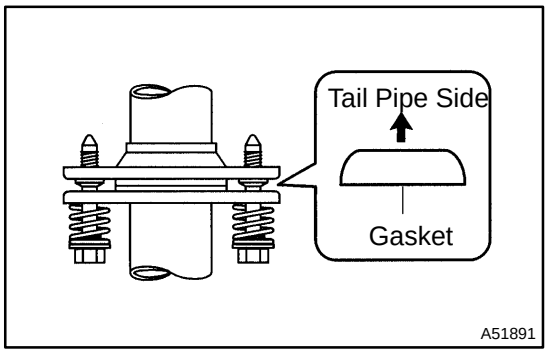

(c) Install a new gasket on the exhaust pipe (rear side).

(d) Install the exhaust pipe with the 4 compression springs and 4 bolts.
Torque: 43 N·m (440 kgf·cm, 32 ft·lbf)

(e) Install the 2 exhaust pipe supports.

(f) 1ZZ–FE:
(1) Connect the oxygen sensor connector.

(g) 2ZZ–GE:
(1) Connect the 2 oxygen sensor connectors.

(h) Install the font floor carpet with a clip.

44. INSTALL FLOOR PANEL BRACE FRONT

(a) Install the floor panel brace front with the 2 nuts.
Torque: 30 N·m (302 kgf·cm, 22 ft·lbf)

45. INSTALL FUEL SUCTION TUBE SET GASKET (See page 11–21)

46. INSTALL FUEL PUMP ASSEMBLY (See page 11–21)

47. INSTALL FUEL TANK VENT TUBE SET PLATE (See page 11–21)

48. CONNECT FUEL EMISSION TUBE SUB–ASSY NO.1 (See page 11–21)

49. CONNECT FUEL TANK MAIN TUBE SUB–ASSY (See page 11–21)

50. CHECK FUEL LEAK (See page 11–5)

51. CHECK EXHAUST GAS LEAK

52. INSTALL REAR FLOOR SERVICE HOLE COVER (See page 11–21)

53. INSTALL SEPARATE TYPE REAR SEAT CUSHION ASSY (See page 11–21)

FUEL INJECTOR ASSY (2ZZ–GE)

110F0–01

COMPONENTS

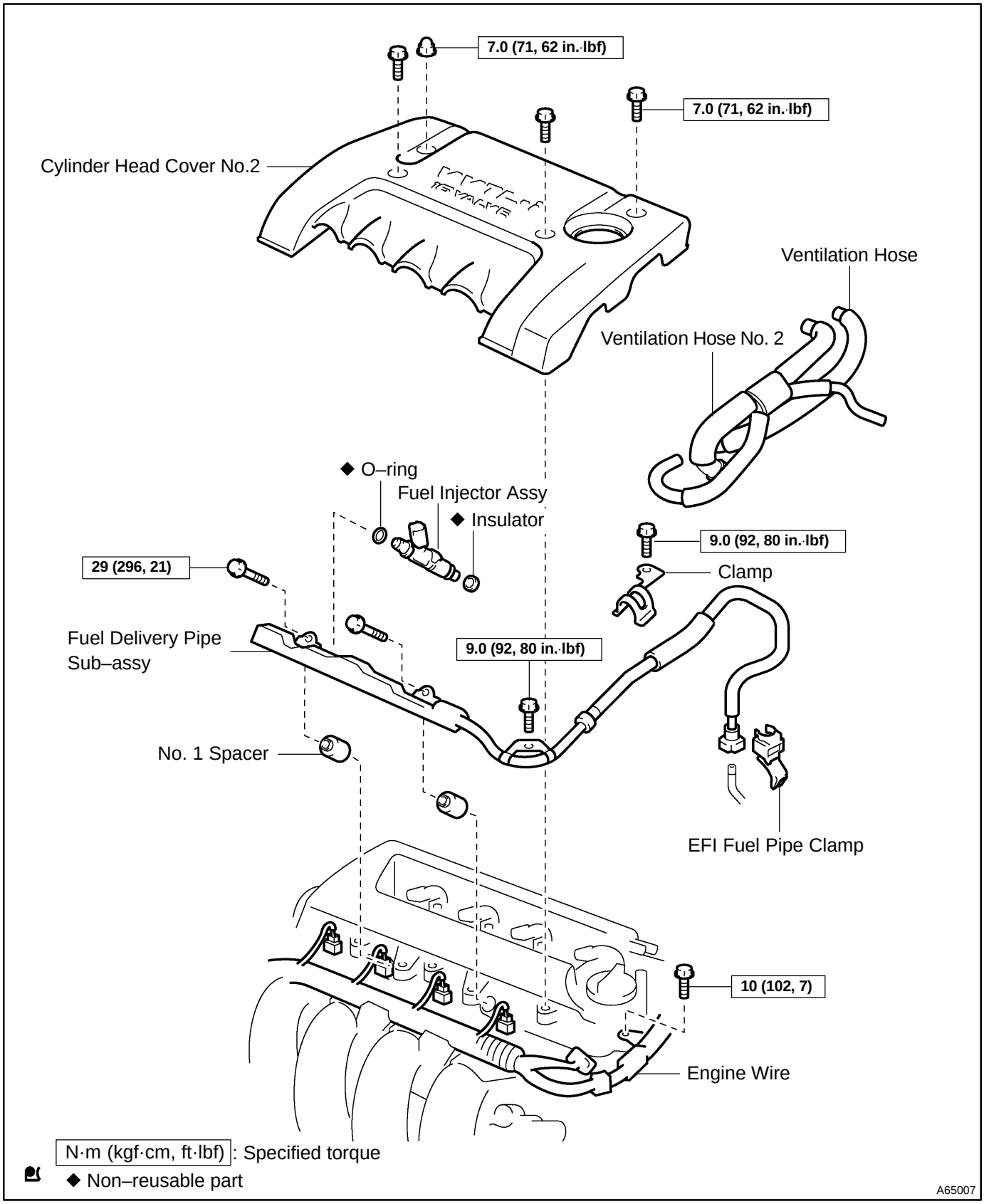

110F1–01

REPLACEMENT

1. WORK FOR PREVENTING GASOLINE FROM SPILLING OUT (See page 11–1)

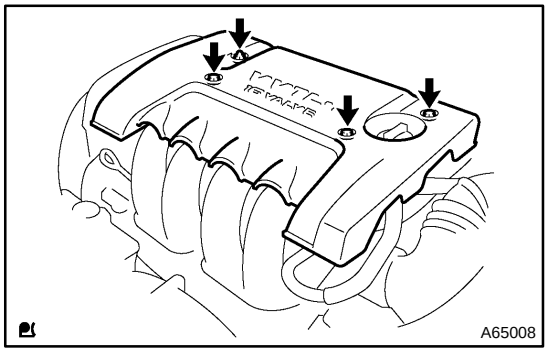

2. REMOVE CYLINDER HEAD COVER NO.2

(a) Remove the 3 bolts, nut and cylinder head cover.

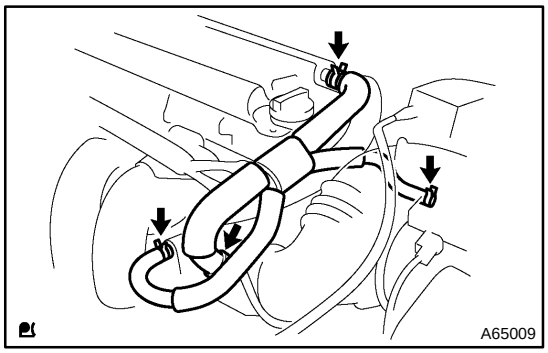

3. REMOVE VENTILATION HOSE NO.2

(a) Remove the ventilation hose.

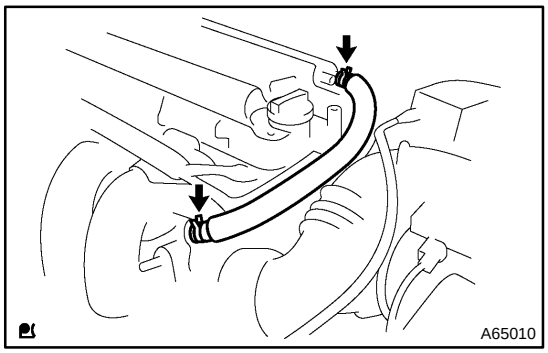

4. REMOVE VENTILATION HOSE

(a) Remove the ventilation hose.

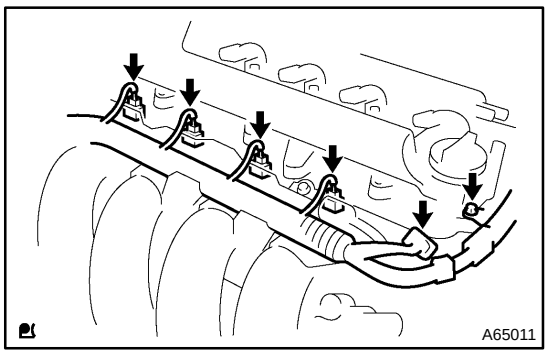

5. DISCONNECT ENGINE WIRE

(a) Remove the bolt.
(b) Disconnect the 4 fuel injector connectors.
(c) Disconnect the cam position sensor connector.

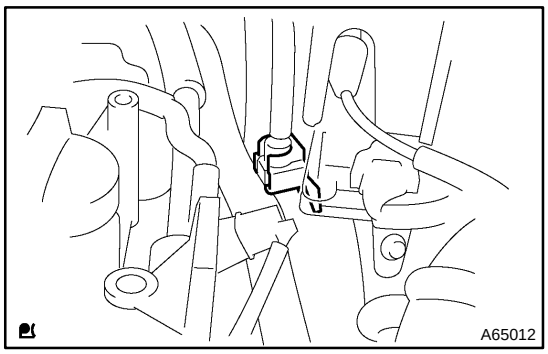

6. REMOVE EFI FUEL PIPE CLAMP

(a) Remove the EFI fuel pipe clamp.

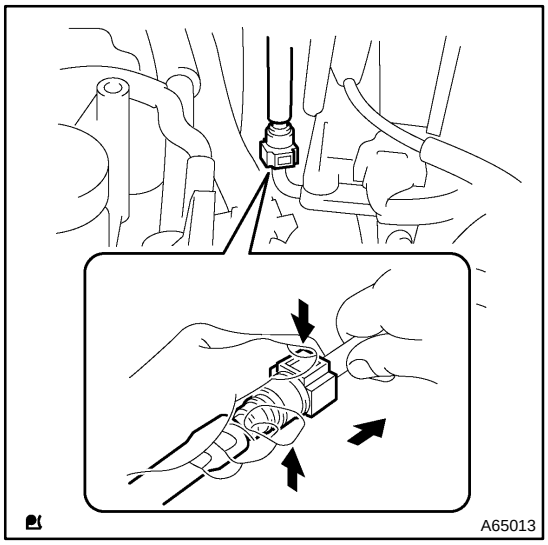

7. REMOVE FUEL DELIVERY PIPE SUB–ASSY

(a) Disconnect the fuel tube (fuel tube connector) from the fuel pipe.

CAUTION:

- **Perform disconnecting operations of the fuel tube connector (quick type) after observing the precautions.**
- **As there is retained pressure in the fuel pipe line, prevent it from splashing inside the engine compartment.**

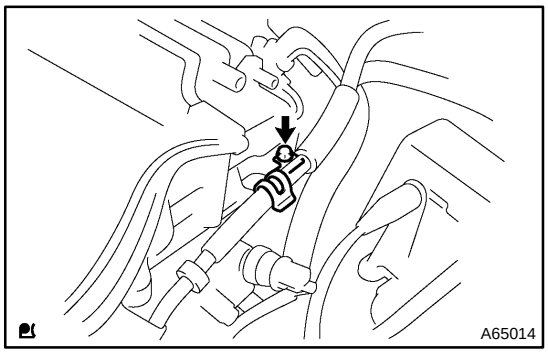

(b) Remove the bolt and clamp.

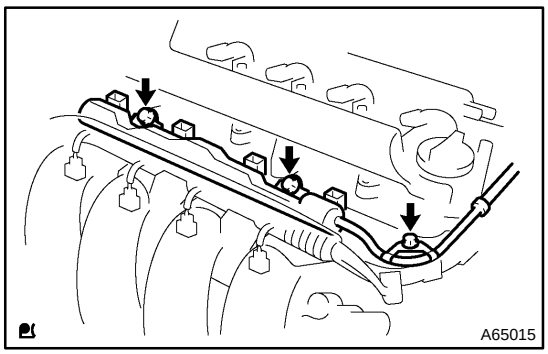

(c) Remove the 3 bolts and fuel delivery pipe together with the 4 fuel injectors and fuel tube.

NOTICE:

Be careful not to drop the fuel injectors when removing the fuel delivery pipe.

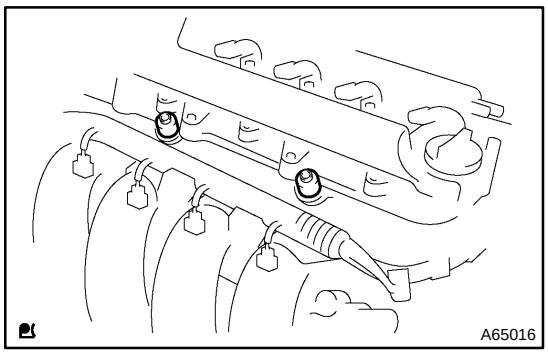

(d) Remove the 2 spacers from the cylinder head.

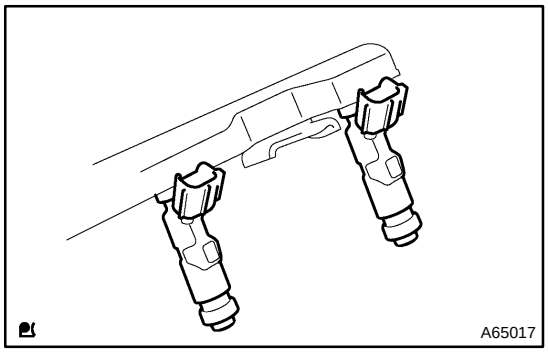

8. REMOVE FUEL INJECTOR ASSY

(a) Pull out the 4 fuel injectors from the fuel delivery pipe.

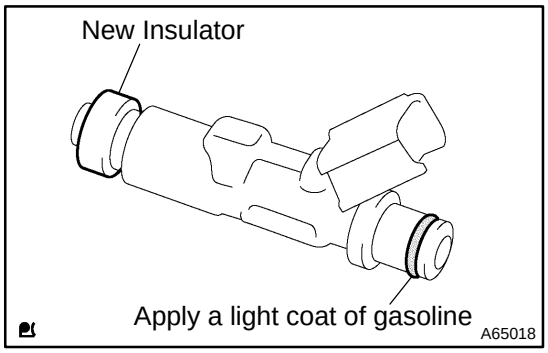

9. INSTALL FUEL INJECTOR ASSY

(a) Install a new insulator to the each fuel injector.

(b) Apply a light coat of spindle oil or gasoline to a new O–ring, and install it to the each fuel injector.

NOTICE:

Never use engine, gear or brake oil.

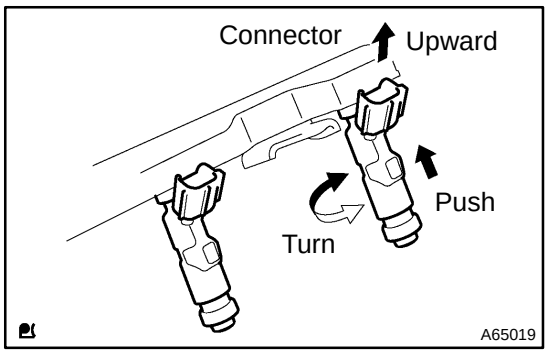

(c) Apply a light coat of spindle oil or gasoline on the place where the fuel delivery pipe touches on O–ring.

(d) While turning the fuel injector clockwise and counter-clockwise, and push it to the fuel delivery pipe.

NOTICE:

- **Be careful not twist the O–ring.**
- **After installing the fuel injectors, check that they turns smoothly. If the fuel injector does not, reinstall it with a new O–ring.**

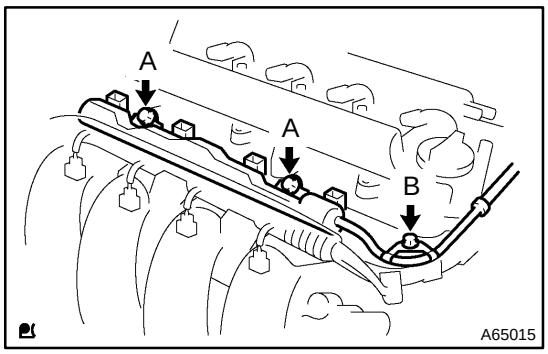

10. INSTALL FUEL DELIVERY PIPE SUB–ASSY

(a) Install the 2 spacers to the cylinder head.

(b) Install the fuel delivery pipe together with the 4 fuel injectors and fuel tube with the 3 bolts.

Torque:
Bolt A 29 N·m (296 kgf·cm, 21 ft·lbf)
Bolt B 9.0 N·m (92 kgf·cm, 80 in.·lbf)

NOTICE:

- **Be careful not drop the fuel injectors when installing the fuel delivery pipe.**
- **Check that the fuel injectors rotate smoothly after installing the fuel delivery pipe.**

(c) Install the clamp with the bolt.

Torque: 9.0 N·m (92 kgf·cm, 80 in.·lbf)

(d) Connect the fuel tube (fuel tube connector) to the fuel pipe.

CAUTION:
Perform connecting operations of the connector (quick type) after observing the precautions.

11. CONNECT ENGINE WIRE

(a) Connect the composition sensor connector.

(b) Connect the 4 fuel injector connectors.

(c) Install the bolt.

Torque: 10 N·m (102 kgf·cm, 7 ft·lbf)

12. INSTALL CYLINDER HEAD COVER NO.2

(a) Install the cylinder head cover with the 3 bolts and nut.

Torque: 7.0 N·m (71 kgf·cm, 62 in.·lbf)

13. CHECK FUEL LEAK (See page 11–1)

FUEL PUMP ASSY (4WD)

110EW–01

COMPONENTS

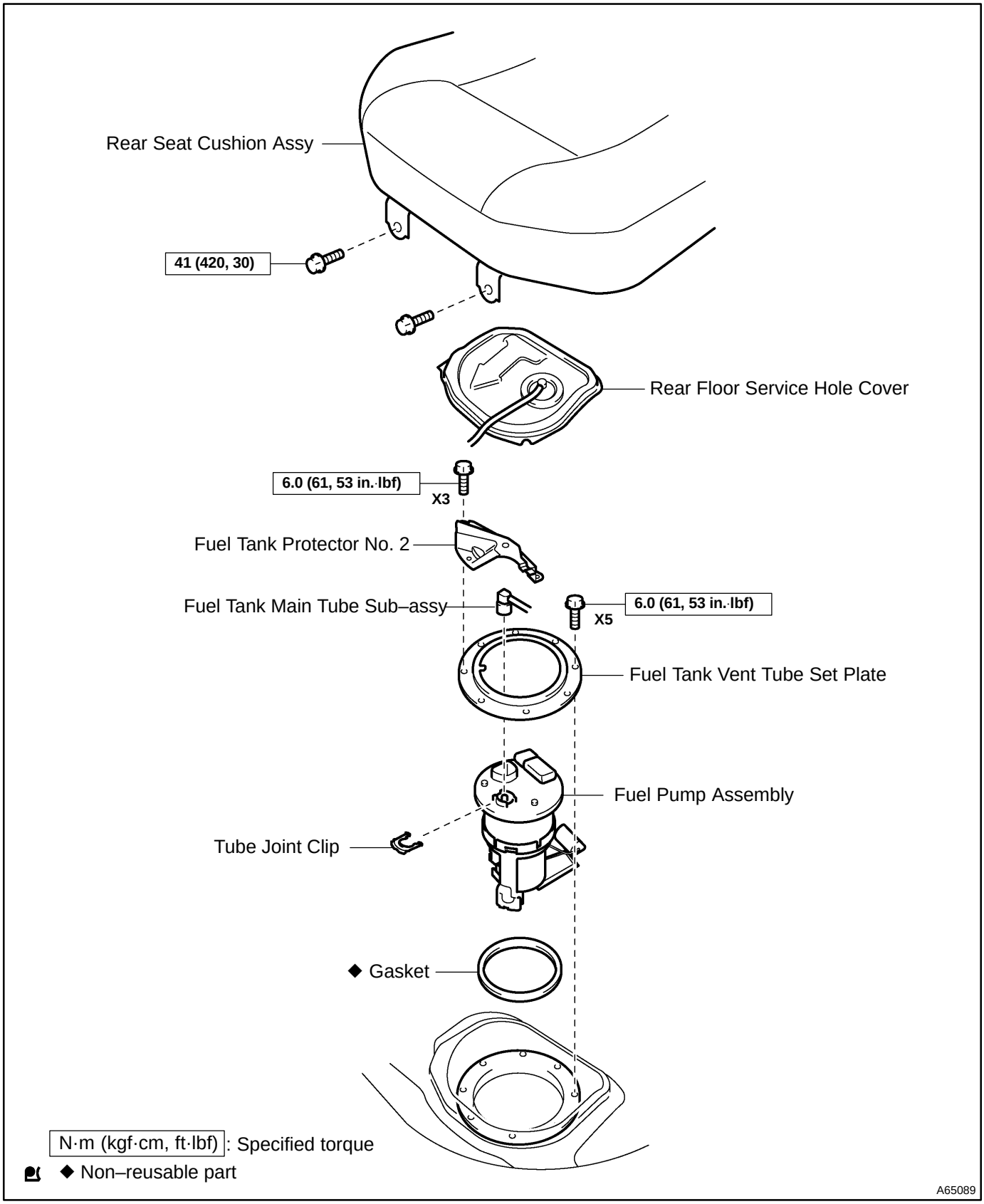

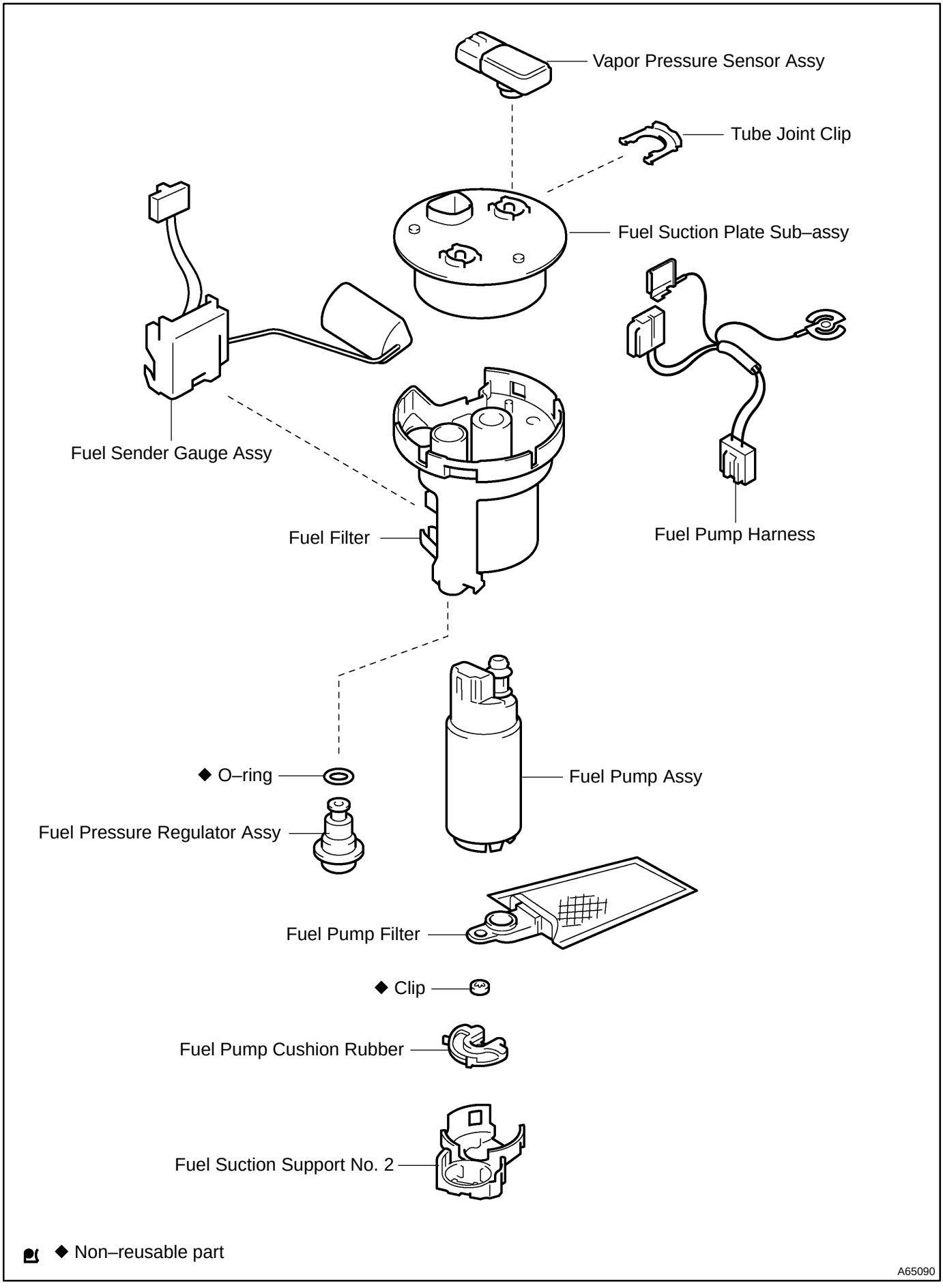
Vapor Pressure Sensor Assy
Tube Joint Clip
Fuel Suction Plate Sub–assy
Fuel Sender Gauge Assy
Fuel Filter
Fuel Pump Harness
◆ O–ring
Fuel Pump Assy
Fuel Pressure Regulator Assy
Fuel Pump Filter
◆ Clip
Fuel Pump Cushion Rubber
Fuel Suction Support No. 2
◆ Non–reusable part
A65090

110EX–01

Removal & Installation and Disassembly & Reassembly

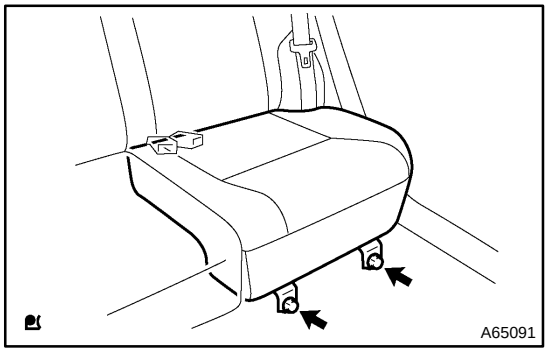

1. REMOVE SEPARATE TYPE REAR SEAT CUSHION ASSY

(a) Remove the 2 installing bolts of the rear seat cushion.

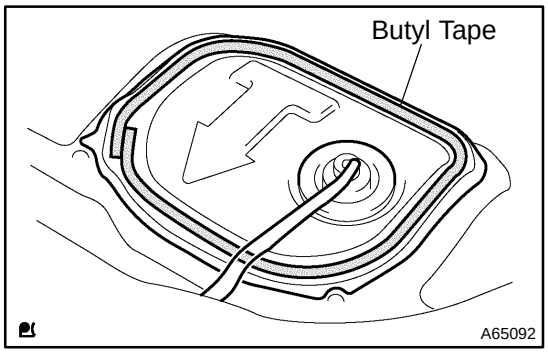

2. REMOVE REAR FLOOR SERVICE HOLE COVER

(a) Remove the rear service hole cover.

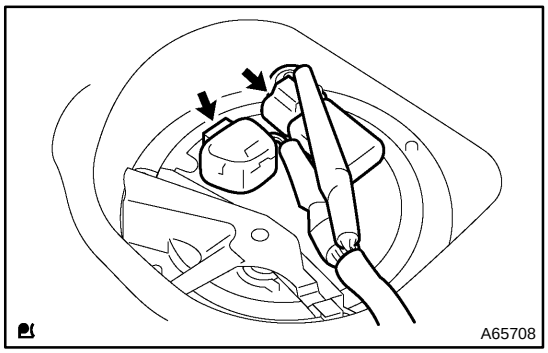

(b) Disconnect the fuel pump and vapor pressure sensor connector.

3. WORK FOR PREVENTING GASOLINE FROM SPILLING OUT

(a) Start the engine.

(b) After the engine has stopped on the its own, turn the ignition switch to lock.

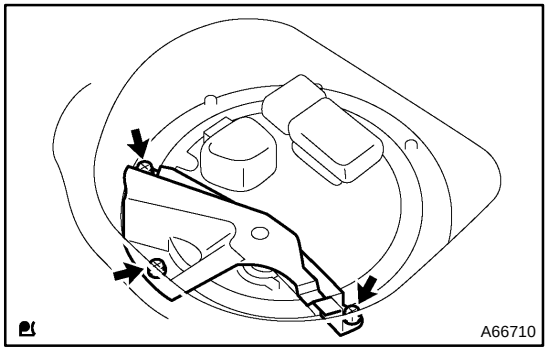

4. REMOVE FUEL TANK PROTECTOR NO.2

(a) Remove the 3 bolts and fuel tank protector.

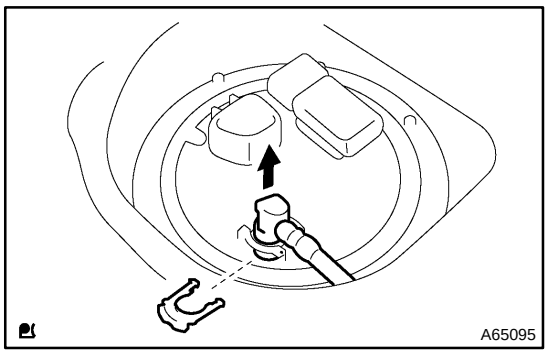

5. DISCONNECT FUEL TANK MAIN TUBE SUB–ASSY

(a) Remove the tube joint clip, and pull out the fuel tank main tube.

NOTICE:

- **Check if there is any dirt like mud around the fuel tube joint before this work and clean dirt away.**
- **Be careful of dirt like mud because the fuel tube connector has an O–ring to seal the fuel tube joint and fuel suction plate.**
- **Do not use any tool in this work.**
- **Do not bend or twist the nylon tube by force.**
- **After disconnecting, cover the fuel tube joint with a vinyl bag.**
- **When the fuel tube joint and plug are stuck, pinch the fuel tank main tube between fingers, and turn it carefully to free and then disconnect the fuel tank main tube.**

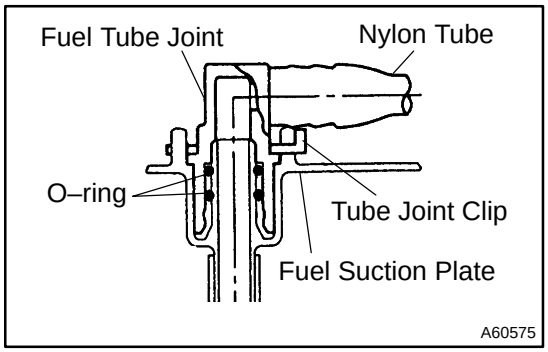

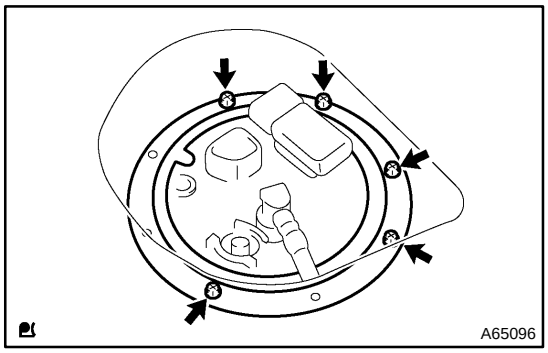

6. REMOVE FUEL TANK VENT TUBE SET PLATE

(a) Remove the 5 bolts and fuel tank vent tube set plate.

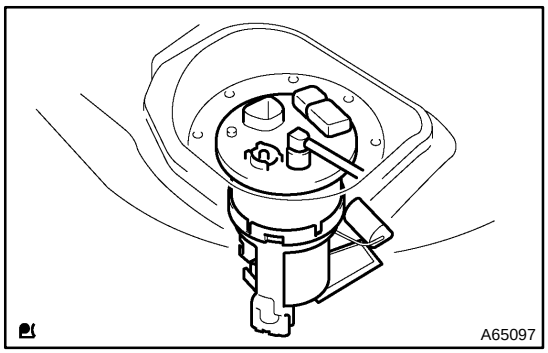

7. REMOVE FUEL PUMP ASSEMBLY

(a) Pull out the fuel pump assembly.

NOTICE:

- **Do not damage the fuel pump filter.**
- **Be careful that the arm of the fuel sender gauge should not bent.**

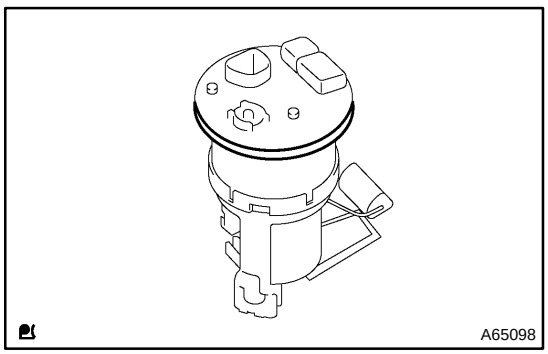

8. REMOVE FUEL SUCTION TUBE SET GASKET

(a) Remove the gasket from the fuel pump assembly.

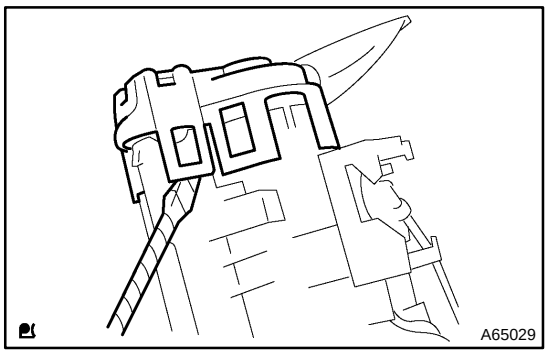

9. REMOVE FUEL SUCTION SUPPORT NO.2

(a) Using a screwdriver, disconnect the 5 snap claws from the claw holes, and remove the fuel suction support.

NOTICE:

Do not damage the fuel suction support.

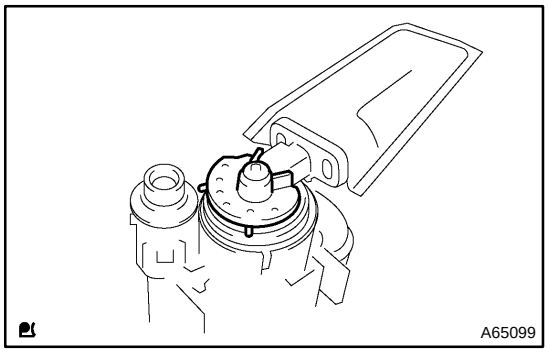

10. REMOVE FUEL PUMP CUSHION RUBBER

(a) Remove the fuel pump cushion rubber.

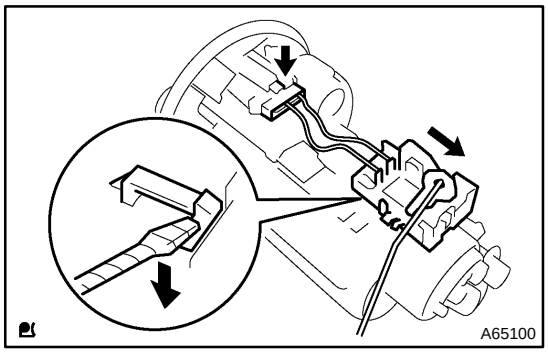

11. REMOVE FUEL SENDER GAGE ASSY

(a) Disconnect the fuel sender gage connector.

(b) Using a screwdriver, unlock the fuel sender gage, and slide it remove.

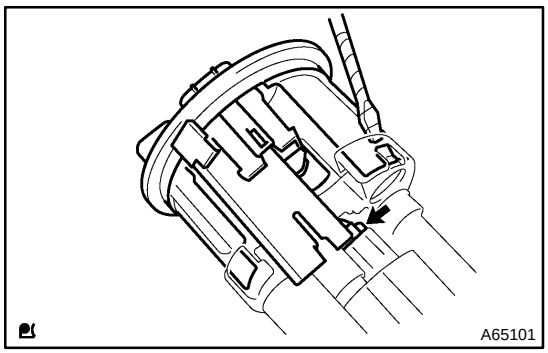

12. REMOVE FUEL SUCTION PLATE SUB–ASSY

(a) Disconnect the fuel pump connector.

(b) Using a screwdriver, disconnect the 4 snap claws from the claw holes, and pull out the fuel suction plate.

NOTICE:

Do not damage the fuel suction plate.

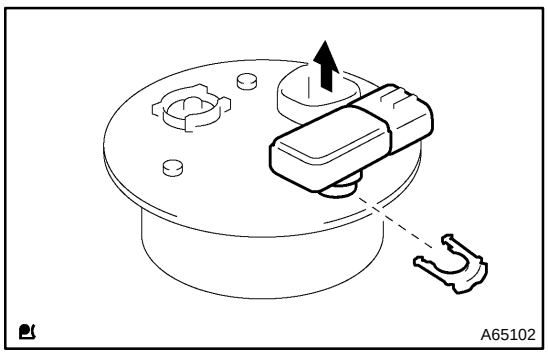

13. REMOVE VAPOR PRESSURE SENSOR ASSY

(a) Remove the tube joint clip, and pull out the vapor pressure sensor.

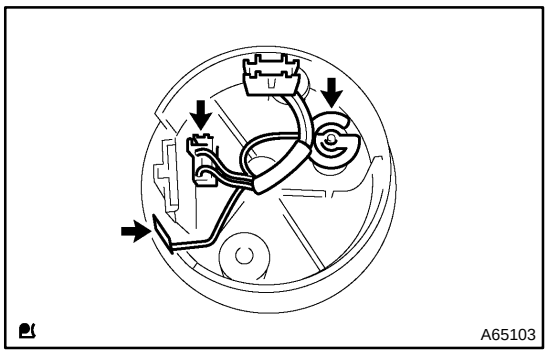

14. REMOVE FUEL PUMP HARNESS

(a) Remove the fuel pump harness from the fuel suction plate.

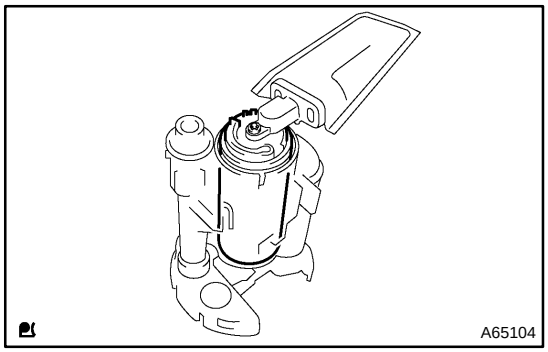

15. REMOVE FUEL PUMP

(a) Pull out the fuel pump from the fuel filter.

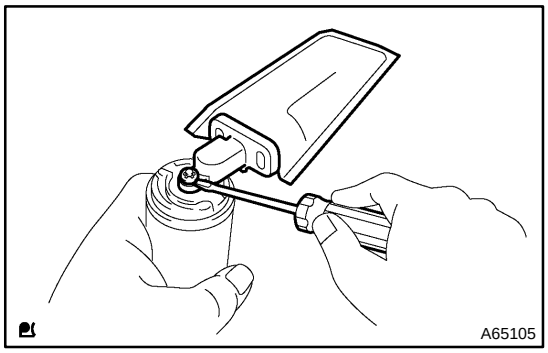

16. REMOVE FUEL PUMP FILTER

(a) Using a small screwdriver, pry out the clip.

(b) Pull out the fuel pump filter from the fuel pump.

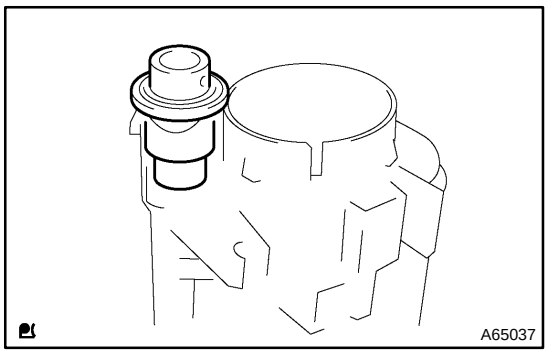

17. REMOVE FUEL PRESSURE REGULATOR ASSY

(a) Pull out the fuel pressure regulator from the fuel filter.

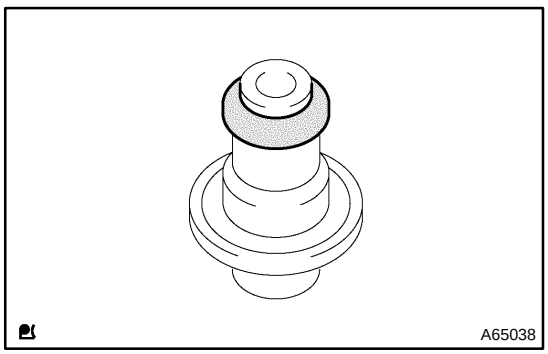

18. REMOVE FUEL PRESSURE REGULATOR O–RING

(a) Remove an O–ring from the fuel pressure regulator.

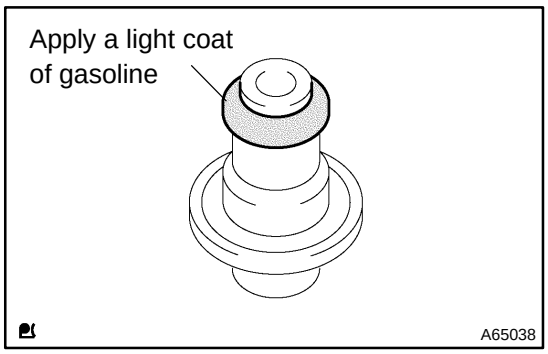

19. INSTALL FUEL PRESSURE REGULATOR O–RING

(a) Apply a light coat of gasoline to a new O–ring, and install it to the fuel pressure regulator.

20. INSTALL FUEL PUMP FILTER

(a) Install the fuel pump filter with a new clip.

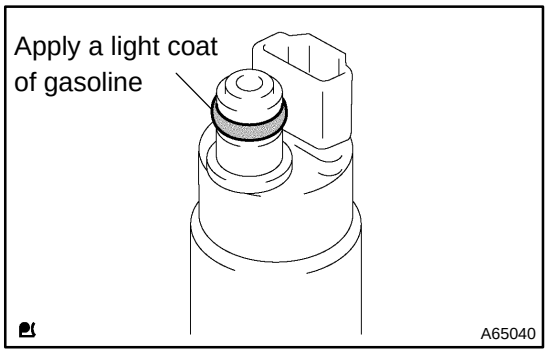

21. INSTALL FUEL PUMP

(a) Apply a light coat of gasoline to an O–ring, and install the fuel pump to the fuel filter.

22. INSTALL VAPOR PRESSURE SENSOR ASSY

(a) Install the vapor pressure sensor with the tube joint clip.

NOTICE:

- **Check that there is no scratch or foreign objects on the connecting parts.**
- **Check that the fuel tube joint is inserted fully and securely.**
- **Check that the tube joint clip is on the collar of the fuel tube joint.**
- **After installing the tube joint clip, check that the fuel tube joint is not pulled off.**

23. INSTALL FUEL SUCTION TUBE SET GASKET

(a) Install a new gasket to the fuel pump assembly.

24. INSTALL FUEL PUMP ASSEMBLY

(a) Install the fuel pump assembly to the fuel tank.

NOTICE:

- **Do not damage the fuel pump filter.**
- **Be careful that the arm of the fuel sender gauge should not bent.**

25. INSTALL FUEL TANK VENT TUBE SET PLATE

(a) Install the fuel tank vent tube set plate with the 5 bolts.

Torque: 6.0 N·m (61 kgf·cm, 53 in.·lbf)

26. CONNECT FUEL TANK MAIN TUBE SUB–ASSY

(a) Install the fuel tank main tube with the tube joint clip.

NOTICE:

- **Check that there is no scratch or foreign objects on the connecting parts.**
- **Check that the fuel tube joint is inserted fully and securely.**
- **Check that the tube joint clip is on the collar of the fuel tube joint.**
- **After installing the tube joint clip, check that the fuel tube joint is not pulled off.**

27. INSTALL FUEL TANK PROTECTOR NO.2

(a) Install the fuel tank protector with the 3 bolts.
Torque: 6.0 N·m (61 kgf·cm, 53 in.·lbf)

28. CHECK FUEL LEAK (See page 11–1)

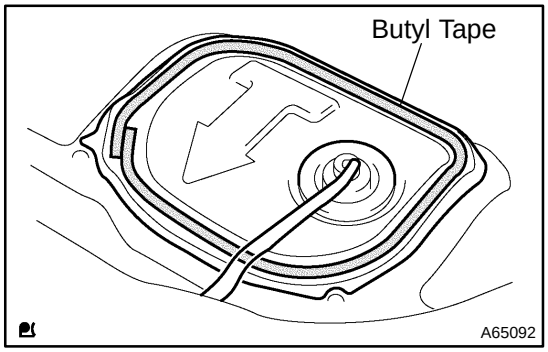

29. INSTALL REAR FLOOR SERVICE HOLE COVER

(a) Using the butyl tape, install the rear floor service hole cover.

30. INSTALL SEPARATE TYPE REAR SEAT CUSHION ASSY

(a) Install the rear seat cushion with the 2 bolts.
Torque: 41 N·m (420 kgf·cm, 30 ft·lbf)

FUEL TANK ASSY (4WD)

110ES–01

COMPONENTS

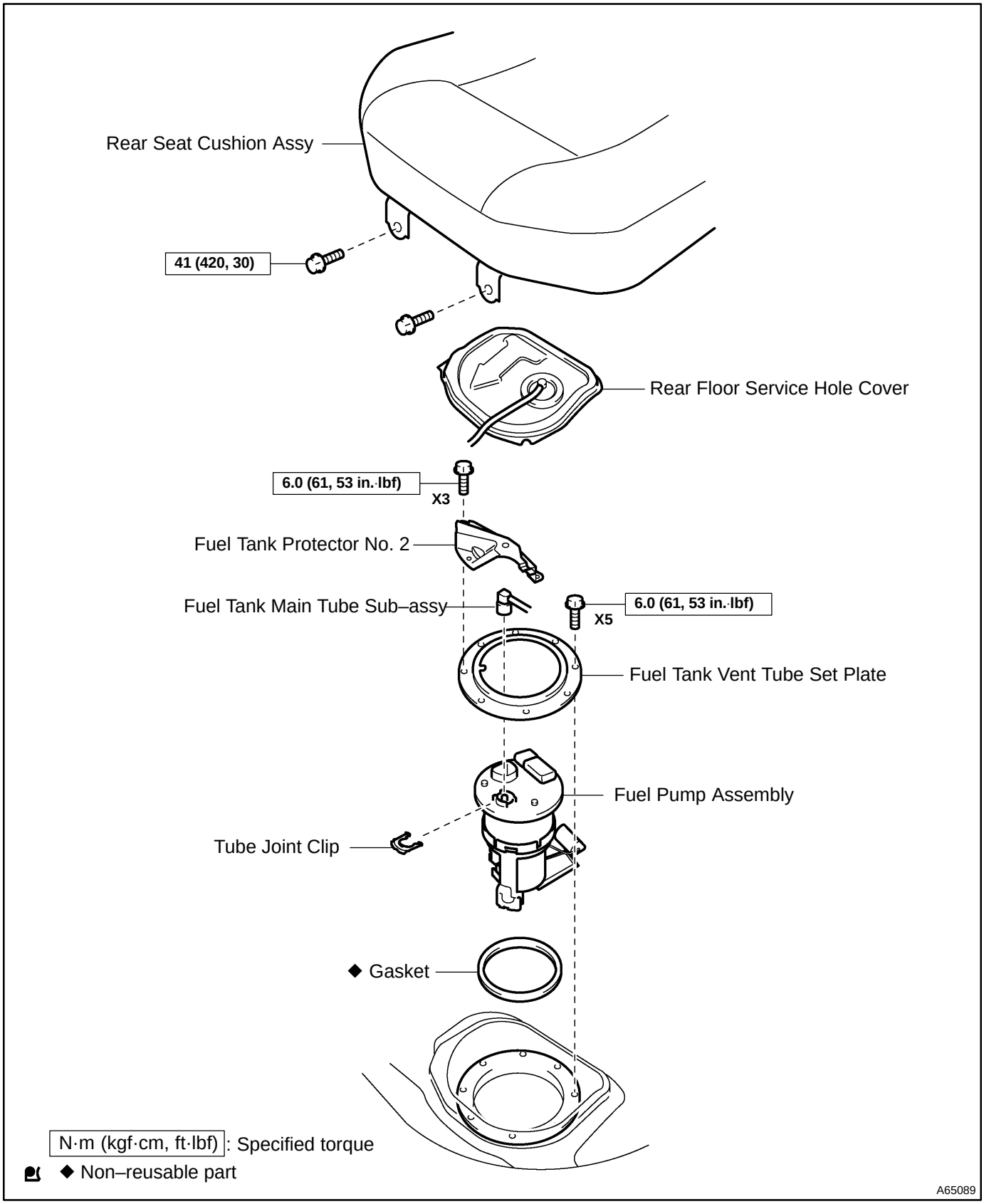

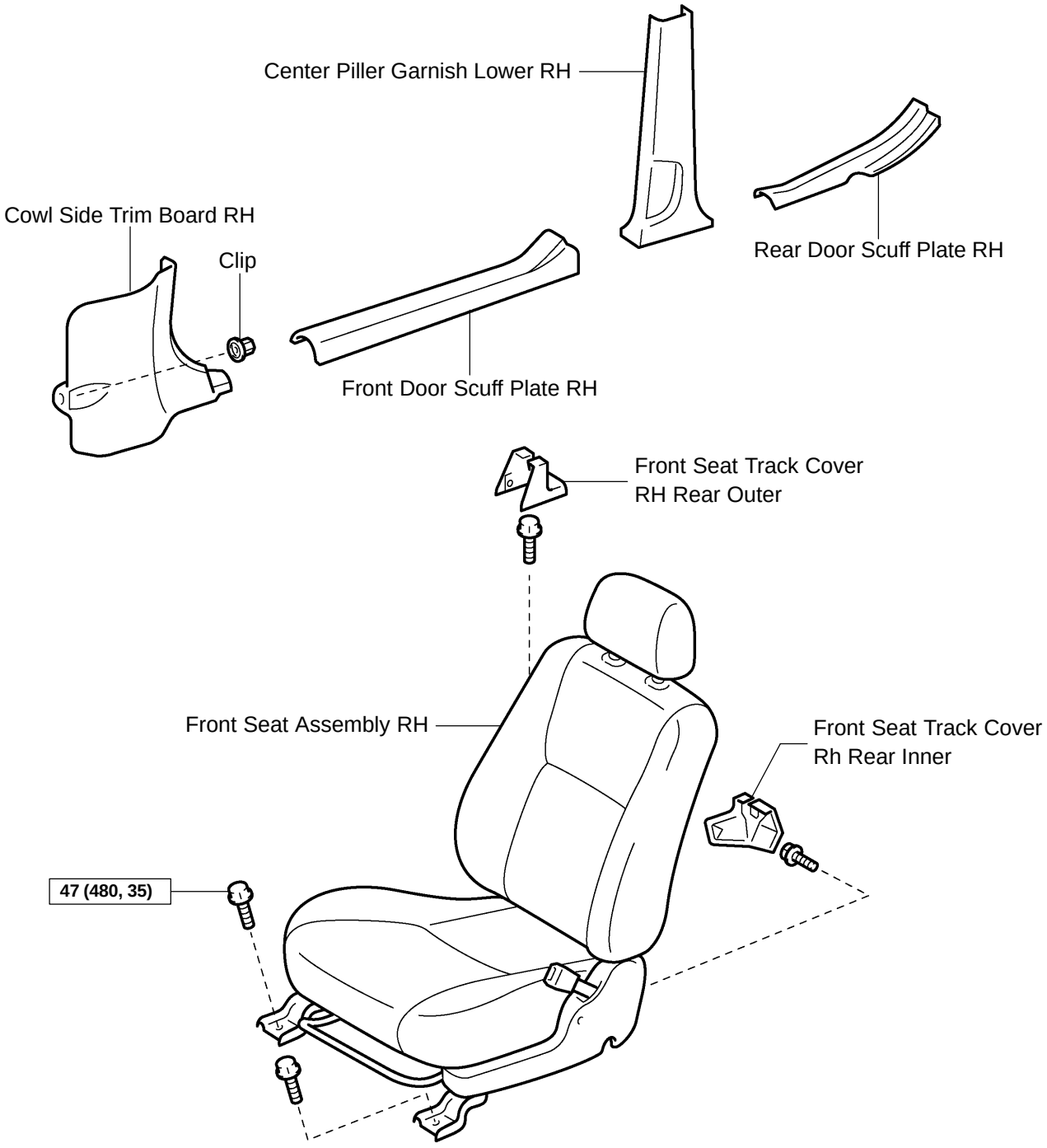

N·m (kgf·cm, ft·lbf): Specified torque

◆ Non–reusable part

A65621

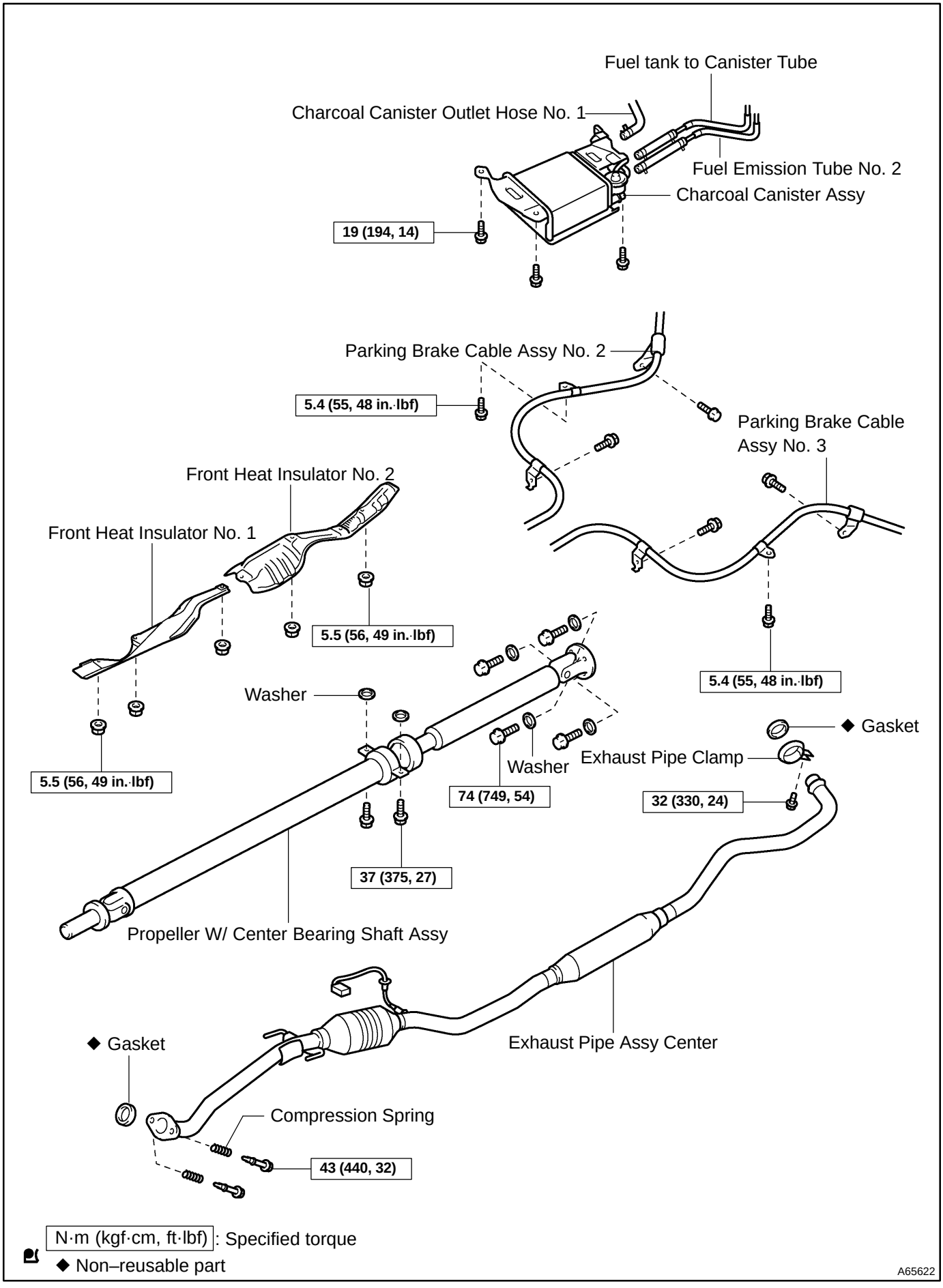
Fuel tank to Canister Tube
Charcoal Canister Outlet Hose No. 1
Fuel Emission Tube No. 2
Charcoal Canister Assy
19 (194, 14)
Parking Brake Cable Assy No. 2
5.4 (55, 48 in.·lbf)
Parking Brake Cable Assy No. 3
Front Heat Insulator No. 2
Front Heat Insulator No. 1
5.5 (56, 49 in.·lbf)
5.4 (55, 48 in.·lbf)
Washer
◆ Gasket
Exhaust Pipe Clamp
Washer
74 (749, 54)
32 (330, 24)
5.5 (56, 49 in.·lbf)
37 (375, 27)
Propeller W/ Center Bearing Shaft Assy
◆ Gasket
Exhaust Pipe Assy Center
Compression Spring
43 (440, 32)
N·m (kgf·cm, ft·lbf): Specified torque
◆ Non–reusable part
A65622

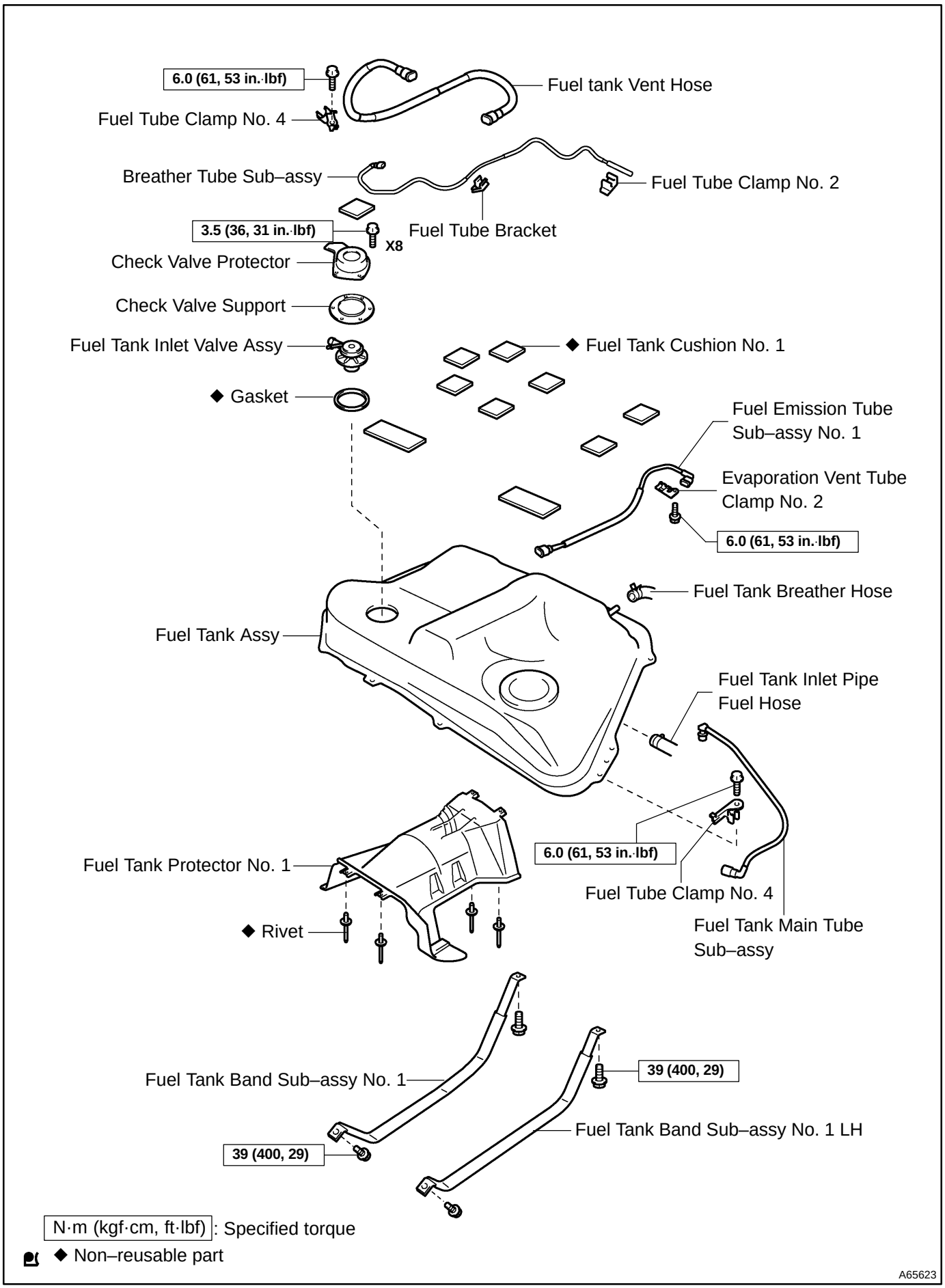
6.0 (61, 53 in.·lbf)
Fuel tank Vent Hose
Fuel Tube Clamp No. 4
Breather Tube Sub–assy
Fuel Tube Clamp No. 2
3.5 (36, 31 in.·lbf)
X8
Fuel Tube Bracket
Check Valve Protector
Check Valve Support
Fuel Tank Inlet Valve Assy
◆ Fuel Tank Cushion No. 1
◆ Gasket
Fuel Emission Tube Sub–assy No. 1
Evaporation Vent Tube Clamp No. 2
6.0 (61, 53 in.·lbf)
Fuel Tank Breather Hose
Fuel Tank Assy
Fuel Tank Inlet Pipe Fuel Hose
6.0 (61, 53 in.·lbf)
Fuel Tank Protector No. 1
Fuel Tube Clamp No. 4
◆ Rivet
Fuel Tank Main Tube Sub–assy
Fuel Tank Band Sub–assy No. 1
39 (400, 29)
Fuel Tank Band Sub–assy No. 1 LH
39 (400, 29)
N·m (kgf·cm, ft·lbf): Specified torque
◆ Non–reusable part
A65623

110ET–01

Removal & Installation and Disassembly & Reassembly

1. REMOVE SEPARATE TYPE REAR SEAT CUSHION ASSY (See page 11–29)
2. REMOVE REAR FLOOR SERVICE HOLE COVER (See page 11–29)
3. WORK FOR PREVENTING GASOLINE FROM SPILLING OUT
(a) Start the engine.
(b) After the engine has stopped on the its own, turn the ignition switch to lock.
4. REMOVE FUEL TANK PROTECTOR NO.2 (See page 11–29)
5. DISCONNECT FUEL TANK MAIN TUBE SUB–ASSY (See page 11–29)
6. REMOVE FUEL TANK VENT TUBE SET PLATE (See page 11–29)
7. REMOVE FUEL PUMP ASSEMBLY (See page 11–29)
8. REMOVE FUEL SUCTION TUBE SET GASKET (See page 11–29)
9. DRAIN FUEL
10. REMOVE FRONT DOOR SCUFF PLATE RH (See page 76–17)
11. REMOVE COWL SIDE TRIM BOARD RH (See page 76–17)
12. REMOVE REAR DOOR SCUFF PLATE RH (See page 76–17)
13. REMOVE CENTER PILLAR GARNISH LOWER RH (See page 76–17)
14. REMOVE FRONT SEAT ASSY RH (See page 72–6)
15. REMOVE EXHAUST PIPE ASSY CENTER
(a) Disconnect the oxygen sensor connector.
(b) Remove the 2 exhaust pipe support.
(c) Remove the bolt and clamp.
(d) Remove the 2 bolts, 2 compression springs and exhaust pipe.

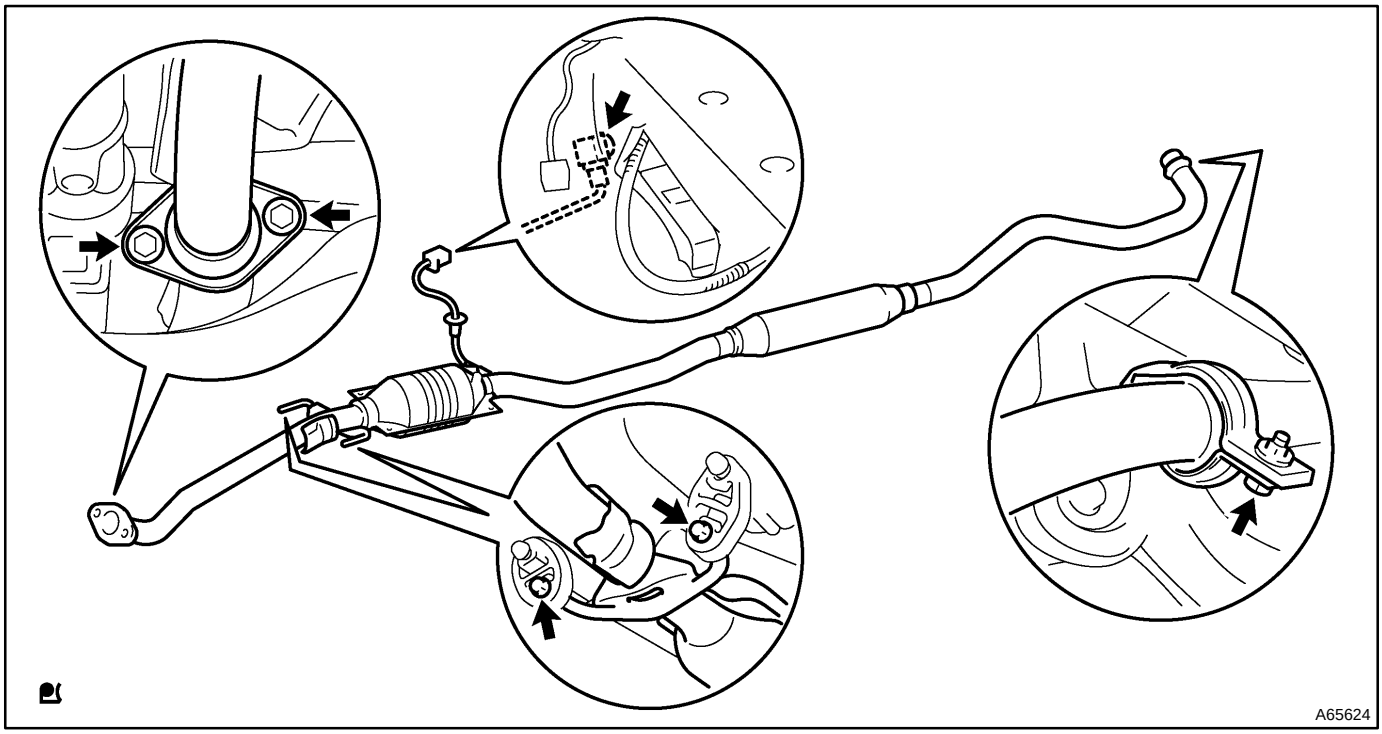

16. REMOVE PROPELLER W/CENTER BEARING SHAFT ASSY (See page 30–6)

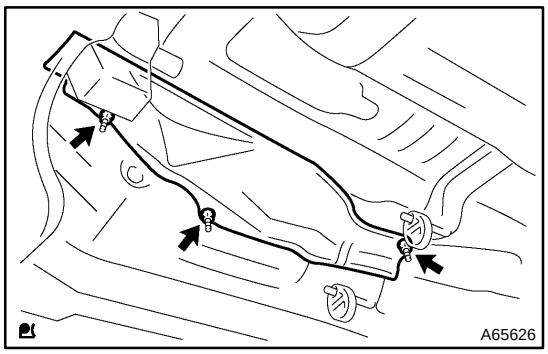

17. REMOVE FRONT FLOOR HEAT INSULATOR NO.1

(a) Remove the 3 nuts and front floor heat insulator.

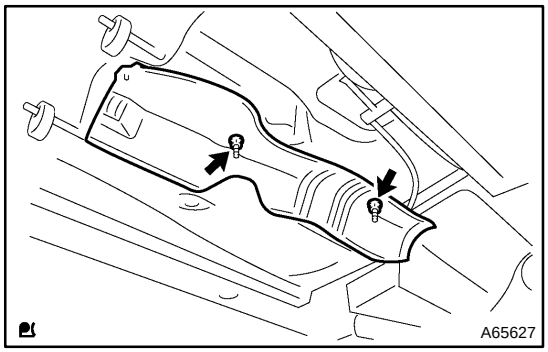

18. REMOVE FRONT FLOOR HEAT INSULATOR NO.2

(a) Remove the 2 nuts and front floor heat insulator.

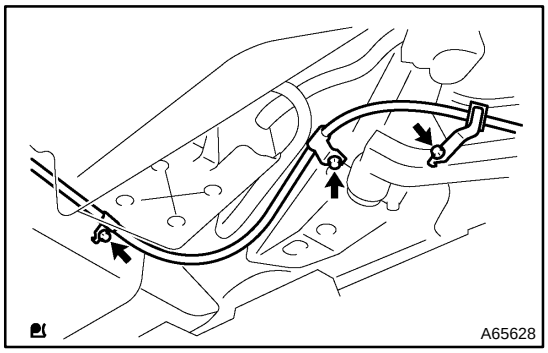

19. SEPARATE PARKING BRAKE CABLE ASSY NO.2

(a) Remove the 3 installing bolts of the parking brake cable.

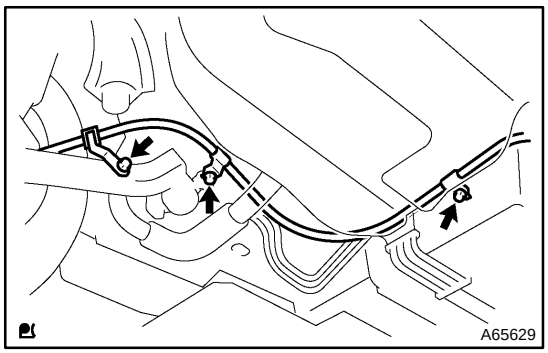

20. SEPARATE PARKING BRAKE CABLE ASSY NO.3

(a) Remove the 3 installing bolts of the parking brake cable.

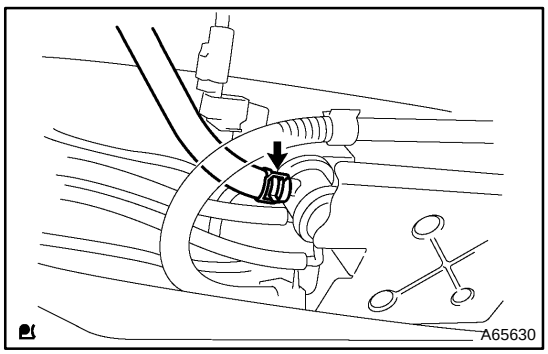

21. DISCONNECT CHARCOAL CANISTER OUTLET HOSE NO.1

(a) Disconnect the charcoal canister outlet hose from the charcoal canister.

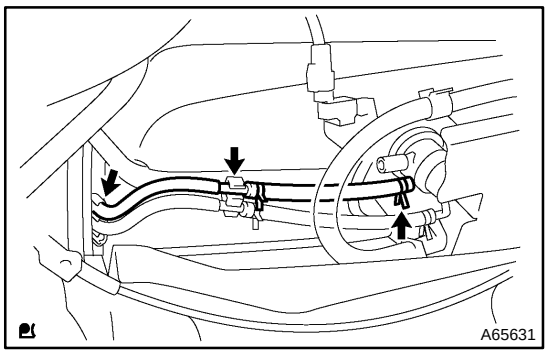

22. DISCONNECT FUEL TANK TO CANISTER TUBE

(a) Disconnect the fuel tank to canister tube from the charcoal canister.

(b) Remove the fuel tank to canister tube from the 2 evaporation vent tube clamps.

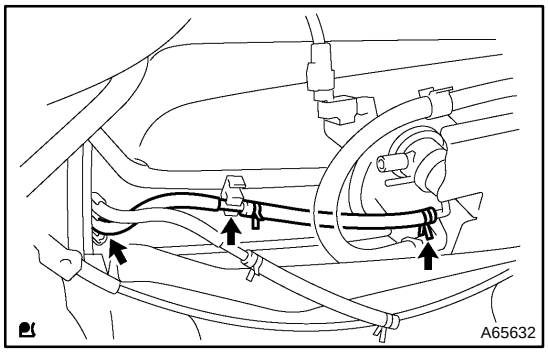

23. DISCONNECT FUEL EMISSION TUBE NO.2

(a) Disconnect the fuel emission tube from the charcoal canister.

(b) Remove the fuel tank to canister tube from the 2 evaporation vent tube clamps.

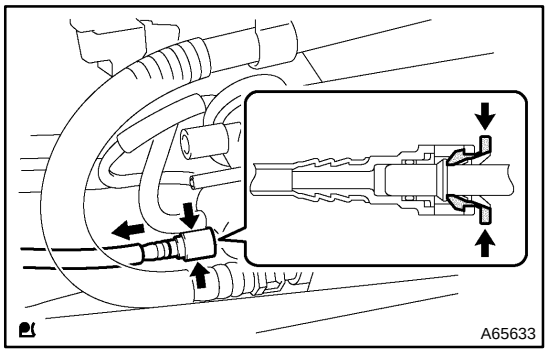

24. DISCONNECT FUEL EVAPORATION TUBE SUB–ASSY NO.1

(a) Pinch the fuel tube connector clip and then pull out the fuel evaporation tube.

NOTICE:

- **Check if there is any dirt like mud around the fuel tube connector before this work and clean the dirt away.**
- **Be careful of dirt like mud because the fuel tube connector has an O–ring to seal the fuel tube connector and pipe.**
- **Do not use any tool in this work.**
- **Do not bend or twist the nylon tube by force.**
- **After disconnecting, cover the fuel tube connector with a vinyl bag.**
- **When the fuel tube connector and pipe are stuck, pinch the fuel evaporation tube between fingers, and turn it carefully to free and then disconnect the fuel evaporation tube.**

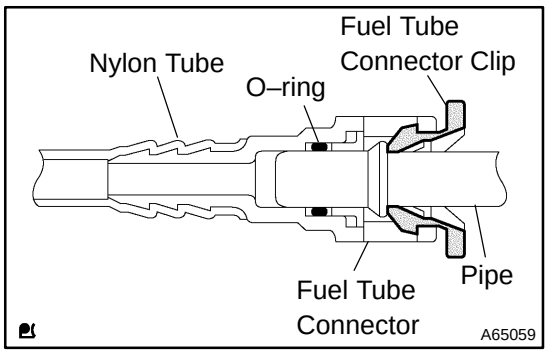

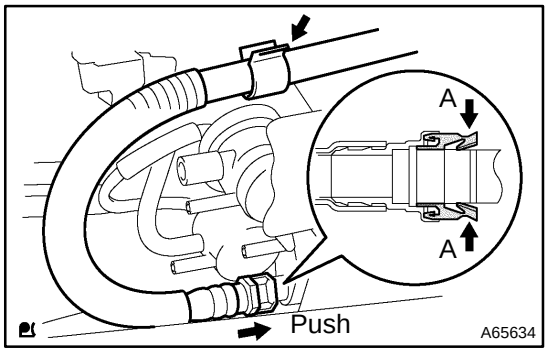

25. DISCONNECT FUEL TANK VENT HOSE

(a) Disconnect the fuel tank bent hose from the charcoal canister.

(1) Push the connector deep inside.

(2) Pinch portion A.

(3) Pull out the connector.

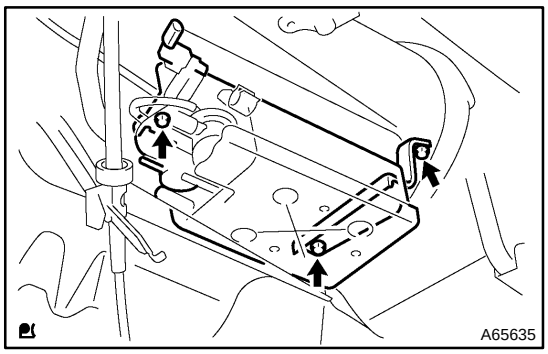

26. REMOVE CHARCOAL CANISTER ASSY

(a) Disconnect the pressure switching valve connector.

(b) Remove the 3 bolts and charcoal canister.

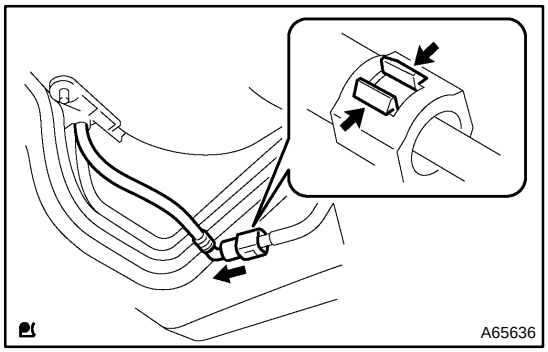

27. DISCONNECT FUEL TANK MAIN TUBE SUB–ASSY

(a) Pinch the fuel tube connector clip, and remove the fuel tube connector clip.

(b) Pull out the fuel tank main tube.

NOTICE:

- **Check if there is any dirt like mud around the fuel tube connector before this work and clean the dirt away.**
- **Be careful of dirt like mud because the fuel tube connector has an O–ring to seal the fuel tube connector and pipe.**
- **Do not use any tool in this work.**
- **Do not bend or twist the nylon tube by force.**
- **After disconnecting, cover the connector with a vinyl bag.**
- **When the fuel tube connector and pipe are stuck, pinch the fuel tank main tube between fingers, and turn it carefully to free and then disconnect the fuel tank main tube.**

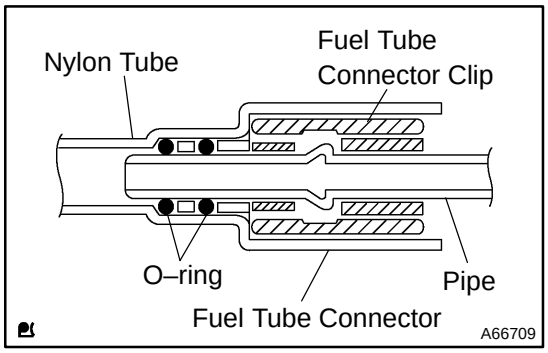

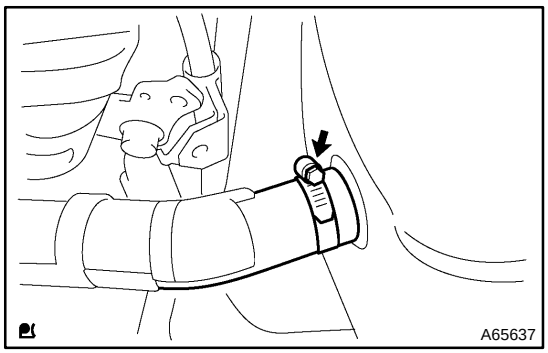

28. DISCONNECT FUEL TANK INLET PIPE FUEL HOSE

(a) Disconnect the fuel tank inlet pipe fuel hose from the fuel tank.

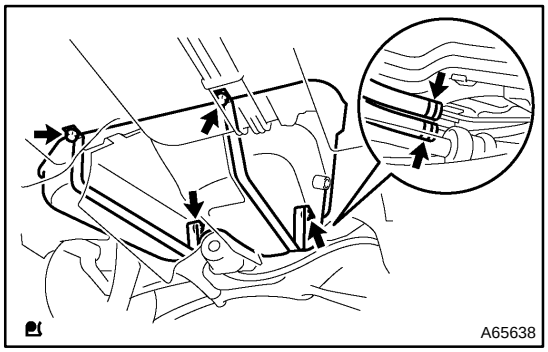

29. REMOVE FUEL TANK ASSY

(a) Set a mission jack top the fuel tank.

(b) Remove the 4 bolts and 2 fuel tank bands.

(c) Operate the mission jack and then disconnect the 2 fuel tank breather hoses.

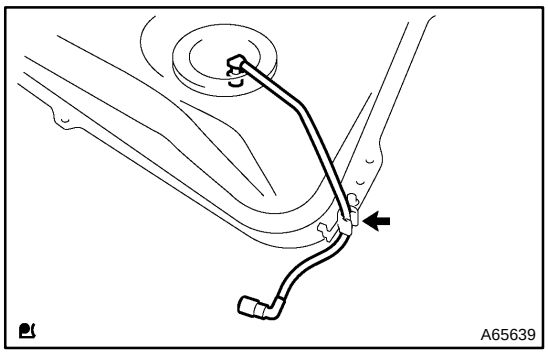

30. REMOVE FUEL TANK MAIN TUBE SUB–ASSY

(a) Remove the fuel tank main tube from the fuel tube clamp.

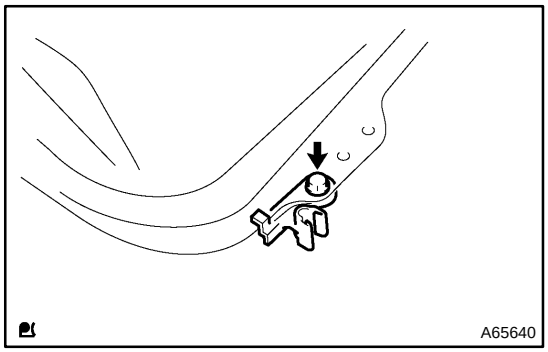

31. REMOVE FUEL TUBE CLAMP NO.4

(a) Remove the bolt and fuel tube clamp.

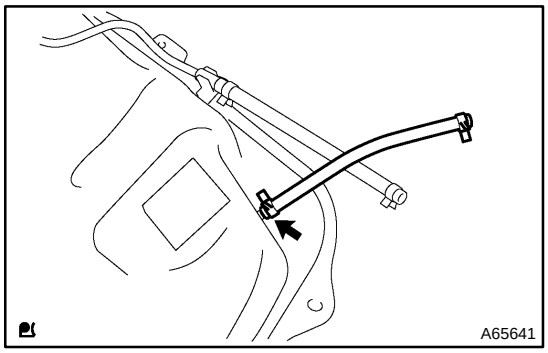

32. REMOVE FUEL TANK BREATHER HOSE

(a) Remove the fuel breather hose from the fuel tank.

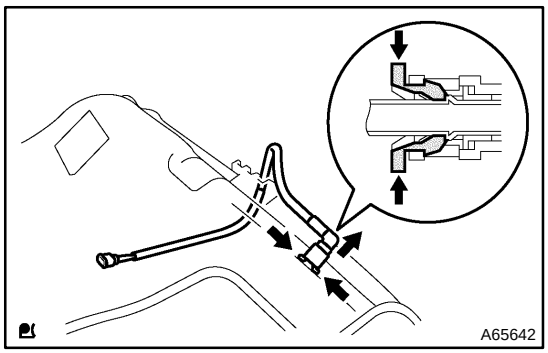

33. REMOVE FUEL EMISSION TUBE SUB–ASSY NO.1

(a) Pinch the fuel tube connector clip and then pull out the fuel emission tube.

NOTICE:

- **Check if there is any dirt like mud around the fuel tube connector before this work and clean dirt away.**
- **Be careful of dirt like mud because the fuel tube connector has an O–ring to seal the fuel tube connector and pipe.**
- **Do not use any tool in this work.**
- **Do not bend or twist the nylon tube by force.**
- **After disconnecting, cover the fuel tube connector with a vinyl bag.**
- **When the fuel tube connector and pipe are stuck, pinch the fuel emission tube between fingers, and turn it carefully to free and then disconnect the fuel emission tube.**

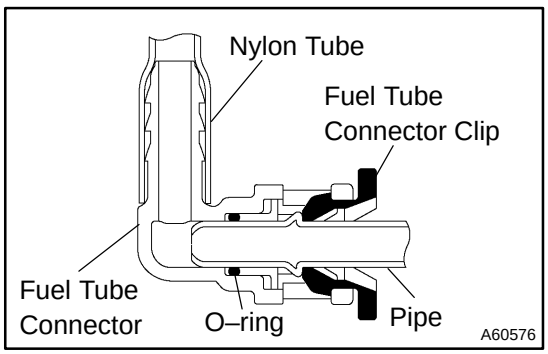

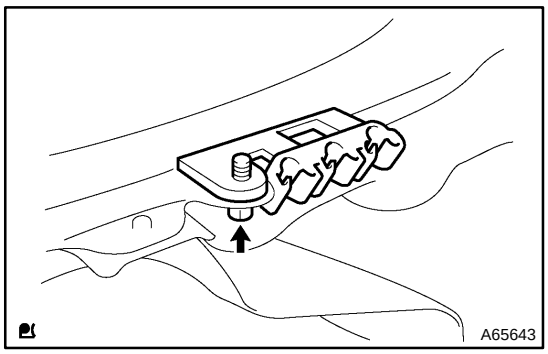

34. REMOVE EVAPORATION VENT TUBE CLAMP NO.2

(a) Remove the bolt and evaporation vent tube clamp.

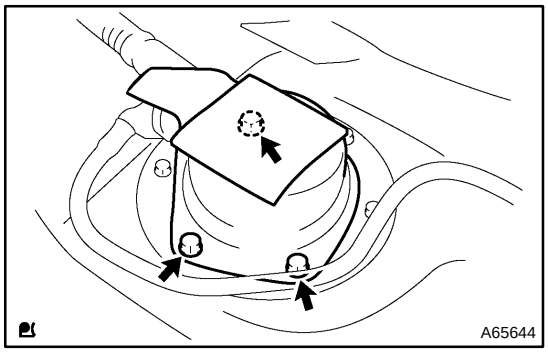

35. REMOVE CHECK VALVE PROTECTOR

(a) Remove the 3 bolts and check valve protector.

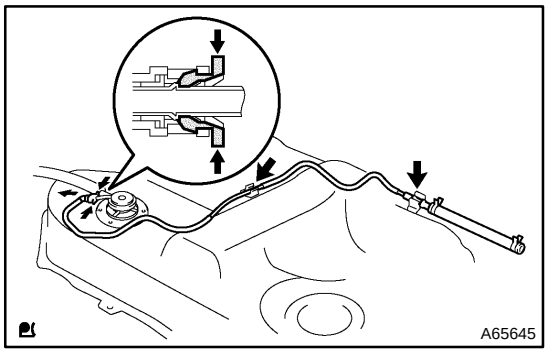

36. REMOVE BREATHER TUBE SUB–ASSY

(a) Pinch the fuel tube connector clip and then pull out the breather tube.

NOTICE:

- **Check if there is any dirt like mud around the connector before this work and clean dirt away.**
- **Be careful of dirt like mud because the fuel tube connector has an O–ring to seal the fuel tube connector and pipe.**
- **Do not use any tool in this work.**
- **Do not bend or twist the nylon tube by force.**
- **After disconnecting, cover the connector with a vinyl bag.**
- **When the fuel tube connector and pipe are stuck, pinch the tube between fingers, and turn it carefully to free and then disconnect the tube.**

(b) Remove the breather tube from the Fuel tube bracket and clamp.

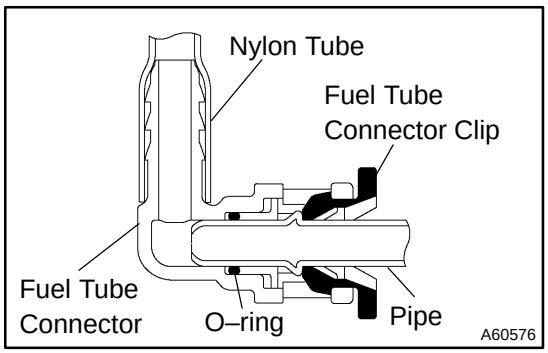

37. REMOVE FUEL TUBE BRACKET

(a) Remove the fuel tube bracket from the fuel tank.

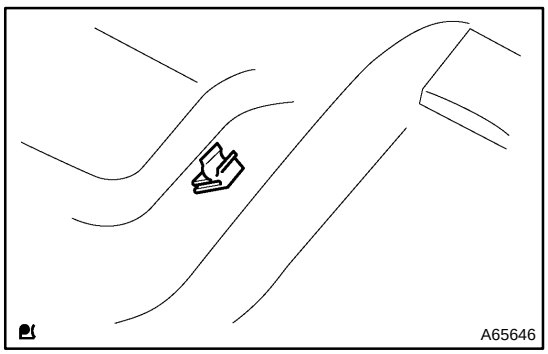

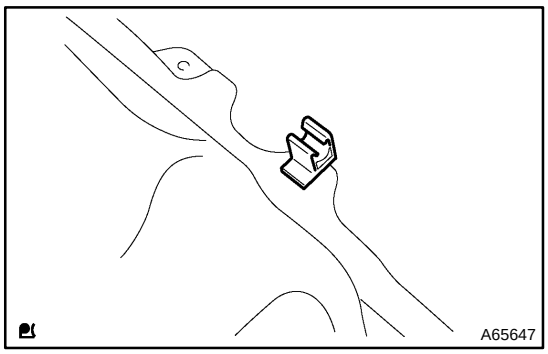

38. REMOVE FUEL TUBE CLAMP NO.2

(a) Remove the fuel tube clamp from the fuel tank.

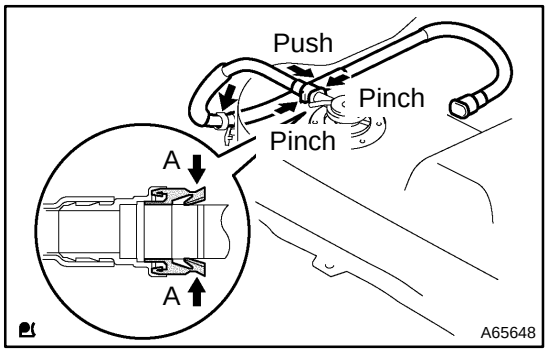

39. REMOVE FUEL TANK VENT HOSE

(a) Disconnect the fuel tank bent hose from the charcoal canister.
  (1) Push the connector deep inside.
  (2) Pinch portion A.
  (3) Pull out the connector.

(b) Remove the fuel tank vent hose from the fuel tube clamp.

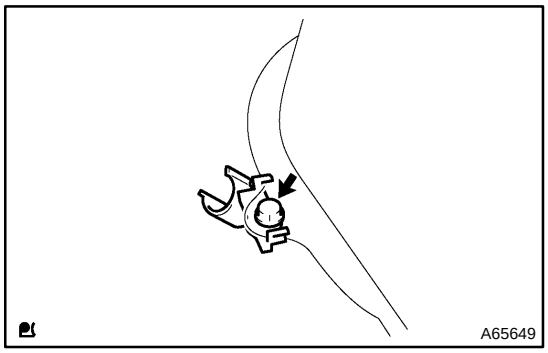

40. REMOVE FUEL TUBE CLAMP NO.4

(a) Remove the bolt and fuel tube clamp.

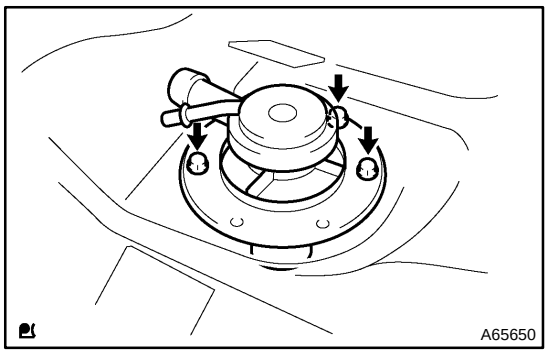

41. REMOVE FUEL TANK INLET VALVE ASSY

(a) Remove the 3 bolt, check valve support and fuel tank inlet valve.

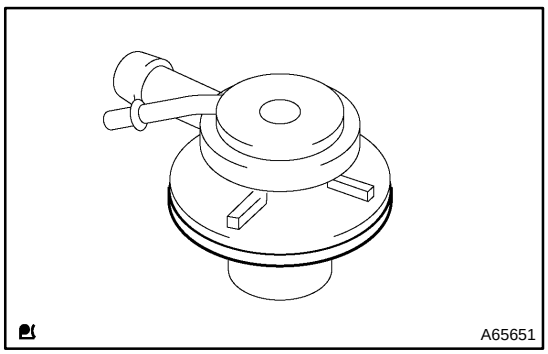

42. REMOVE CHECK VALVE GASKET

(a) Remove the gasket from the fuel tank inlet valve.

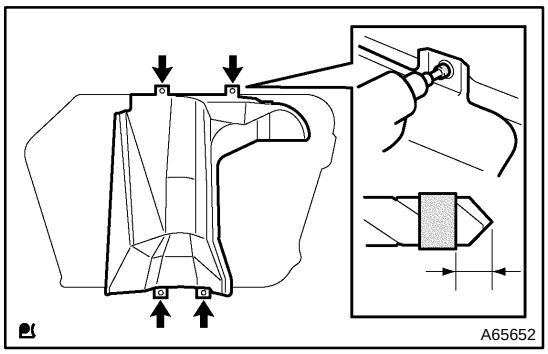

43. REMOVE FUEL TANK PROTECTOR NO.1

(a) Using a drill, cut the flange portion of the rivet.

HINT:

Wind tape so that the drill blade appears approx. 5.0 mm (0.197 in.) on the edge.

NOTICE:

- **If the drill is pressed too firmly, the rivet will also rotate with the drill edge, thus flange will not be cut.**
- **If the drill is pried against the rivet, the installation hole of the rivet may be cut or the drill blade may be damaged.**
- **Use caution against the hot rivet after cut.**

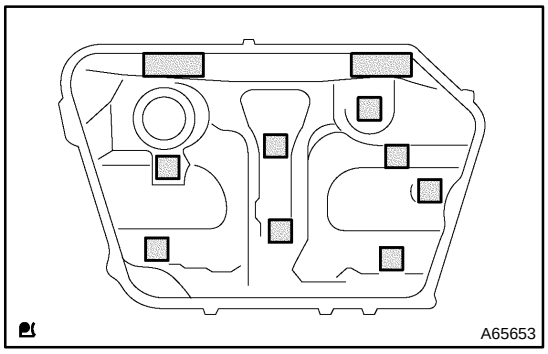

44. REMOVE FUEL TANK CUSHION NO.1

(a) Remove the 10 fuel tank cushions from the fuel tank.

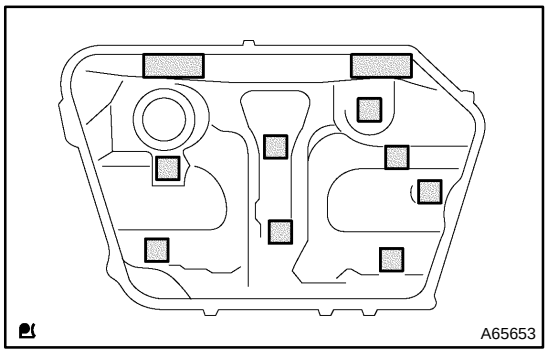

45. INSTALL FUEL TANK CUSHION NO.1

(a) Install the 10 fuel tank cushions to the fuel tank.

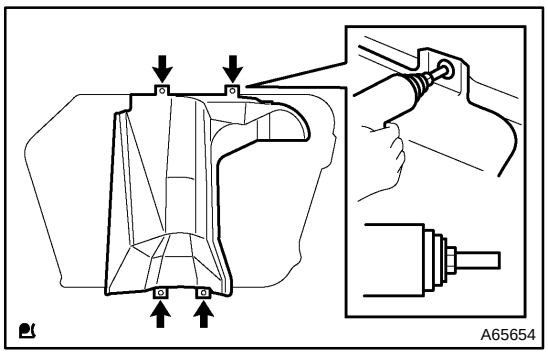

46. INSTALL FUEL TANK PROTECTOR NO.1

(a) Using a riveter, install the fuel tank protector with the 4 new rivet.

HINT:

Install them with the rivet firmly pressed perpendicularly against the installation hole.

47. INSTALL CHECK VALVE GASKET

(a) Install a new gasket to the fuel tank inlet valve.

48. INSTALL FUEL TANK INLET VALVE ASSY

(a) Install the fuel tank inlet valve and check valve support with the 3 bolts.

Torque: 3.5 N·m (36 kgf·cm, 31 in.·lbf)

49. INSTALL FUEL TUBE CLAMP NO.4

(a) Install the fuel tube clamp with the bolt.
Torque: 6.0 N·m (61 kgf·cm, 53 in.·lbf)

50. INSTALL BREATHER TUBE SUB–ASSY

(a) Push in the breather tube to the pipe until fuel tube connector makes ”click” sound.

NOTICE:

- **Check if there is any damage or foreign objects on the connected part.**
- **After connecting, check if the fuel tube connector and pipe are securely connected by pulling them.**

51. INSTALL CHECK VALVE PROTECTOR

(a) Install the check valve protector with 3 bolts.
Torque: 3.5 N·m (36 kgf·cm, 31 in.·lbf)

52. INSTALL EVAPORATION VENT TUBE CLAMP NO.2

(a) Install the evaporation vent tube clamp with the bolt.
Torque: 6.0 N·m (61 kgf·cm, 53 in.·lbf)

53. INSTALL FUEL EMISSION TUBE SUB–ASSY NO.1

(a) Push in the fuel emission tube to the pipe until fuel tube connector makes ”click” sound.

NOTICE:

- **Check if there is any damage or foreign objects on the connected part.**
- **After connecting, check if the fuel tube connector and pipe are securely connected by pulling them.**

54. INSTALL FUEL TUBE CLAMP NO.4

(a) Install the fuel tube clamp with the bolt.
Torque: 6.0 N·m (61 kgf·cm, 53 in.·lbf)

55. INSTALL FUEL TANK ASSY

(a) Set the mission jack to the fuel tank.
(b) Operate the mission jack and then connect the 2 fuel tank breather hoses.
(c) Install 2 fuel tank bands with the 4 bolts.
Torque: 39 N·m (400 kgf·cm, 29 ft·lbf)

56. CONNECT FUEL TANK MAIN TUBE SUB–ASSY

(a) Push in the fuel tube connector to pipe until fuel tube connector, and install the fuel tube connector clip.

NOTICE:

- **Check if there is any damage or foreign objects on the connected part.**
- **After connecting, check if the fuel tube connector and pipe are securely connected by pulling them.**

57. INSTALL CHARCOAL CANISTER ASSY

(a) Install the charcoal canister with 3 bolts.
Torque: 19 N·m (194 kgf·cm, 14 ft·lbf)
(b) Connect pressure switching valve connector.

58. CONNECT FUEL EVAPORATION TUBE SUB–ASSY NO.1

(a) Push in the fuel evaporation tube to the pipe until fuel tube connector makes ”click” sound.

NOTICE:

- **Check if there is any damage or foreign objects on the connected part.**
- **After connecting, check if the fuel tube connector and pipe are securely connected by pulling them.**

59. INSTALL PARKING BRAKE CABLE ASSY NO.2

(a) Install the parking brake cable with 3 bolts.
Torque: 5.4 N·m (55 kgf·cm, 48 in.·lbf)

60. INSTALL PARKING BRAKE CABLE ASSY NO.3

(a) Install the parking brake cable with 3 bolts.
Torque: 5.4 N·m (55 kgf·cm, 48 in.·lbf)

61. INSTALL FRONT FLOOR HEAT INSULATOR NO.2

(a) Install the front floor heat insulator with 2 nuts.
Torque: 5.5 N·m (56 kgf·cm, 49 in.·lbf)

62. INSTALL FRONT FLOOR HEAT INSULATOR NO.1

(a) Install the front floor heat insulator with 3 nuts.
Torque: 5.5 N·m (56 kgf·cm, 49 in.·lbf)

63. INSTALL PROPELLER W/CENTER BEARING SHAFT ASSY (See page 30–6)

64. INSTALL EXHAUST PIPE ASSY CENTER

(a) Using vernier calipers, measure the free length of the compression spring.
Free length: 40mm (1.5748 in.)

(b) Install a new gasket on the exhaust pipe front.

(c) Install a new gasket on the exhaust pipe center (rear side).

(d) Install the exhaust pipe center with the 2 compression springs, clamp and 3 bolts.
Torque:
Front 43 N·m (440 kgf·cm, 32 ft·lbf)
Rear 32 N·m (330 kgf·cm, 24 ft·lbf)

(e) Install the 2 exhaust pipe supports.

(f) Connect the oxygen sensor connector.

65. INSTALL FRONT SEAT ASSY RH (See page 72–6)

66. INSTALL FUEL SUCTION TUBE SET GASKET (See page 11–29)

67. INSTALL FUEL PUMP ASSEMBLY (See page 11–29)

68. INSTALL FUEL TANK VENT TUBE SET PLATE (See page 11–29)

69. CONNECT FUEL TANK MAIN TUBE SUB–ASSY (See page 11–29)

70. INSTALL FUEL TANK PROTECTOR NO.2 (See page 11–29)

71. CHECK FUEL LEAK (See page 11–1)

72. CHECK EXHAUST GAS LEAK

73. INSTALL REAR FLOOR SERVICE HOLE COVER (See page 11–29)

74. INSTALL SEPARATE TYPE REAR SEAT CUSHION ASSY (See page 11–29)

1204T–01

INSPECTION

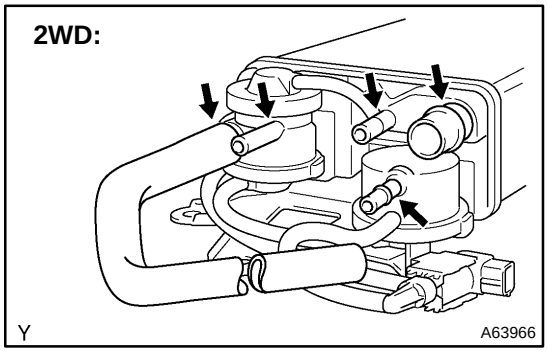

1. CHARCOAL CANISTER ASSY

(a) Visually check the charcoal canister for cracks or damage.

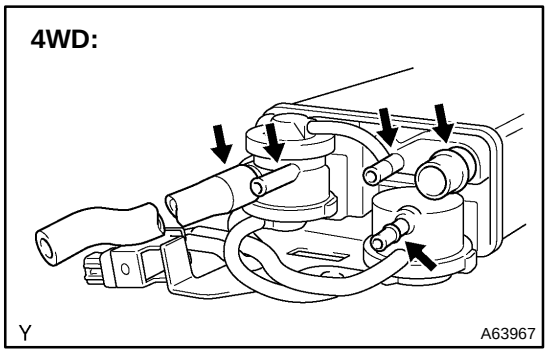

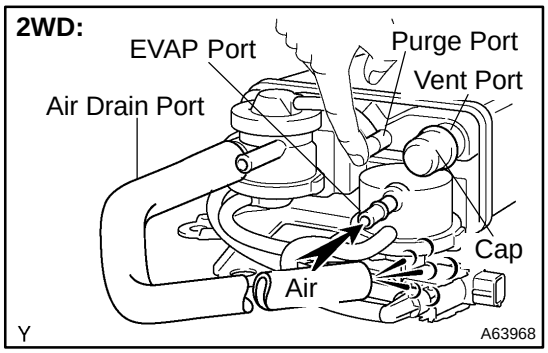

(b) Inspect the charcoal canister operation.
   (1) Plug the vent port with the cap.
   (2) While holding the purge port closed, blow air (1.76 kPa, 18 gf/cm^2, 0.26 psi) into the EVAP port and check that air flows from the air drain port.

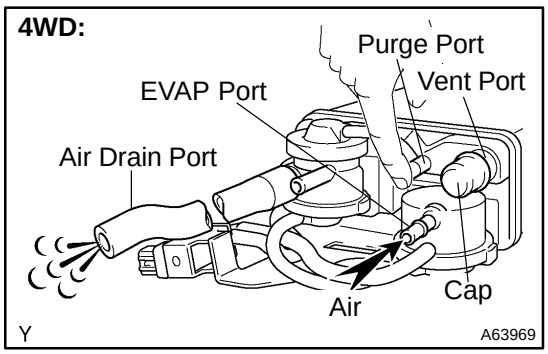

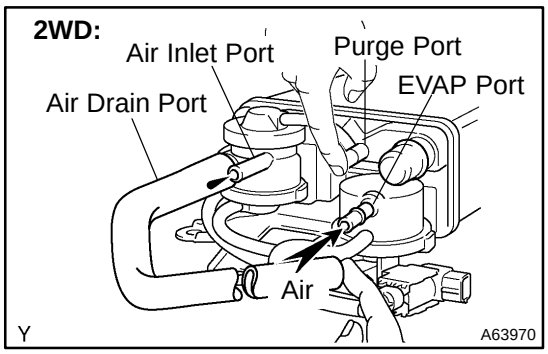

(3) While holding the purge port and the air drain port closed, blow air (1.76 kPa, 18 gf/cm^2, 0.26 psi) into the EVAP port and check that air does not flow from the air inlet port.

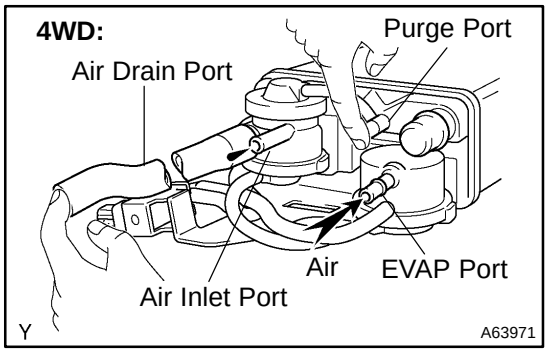

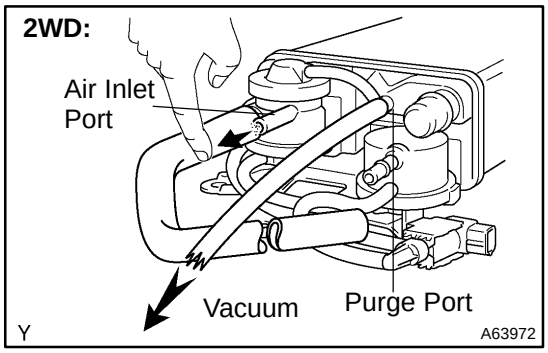

(4) Apply vaccum (3.43 kPa, 25.7 mmHg, 1.01 in.Hg) to the purge port, check that the vacuum dose not decrease when the air inlet port is closed, and check that the vacuum decreases when the air inlet port is released.

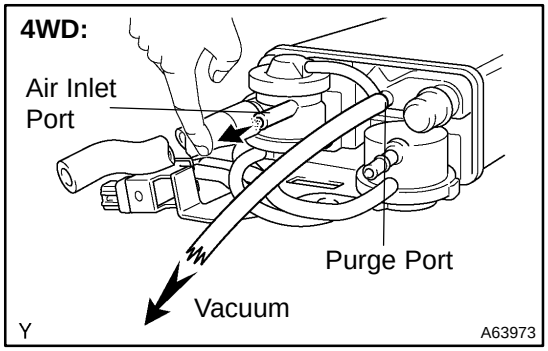

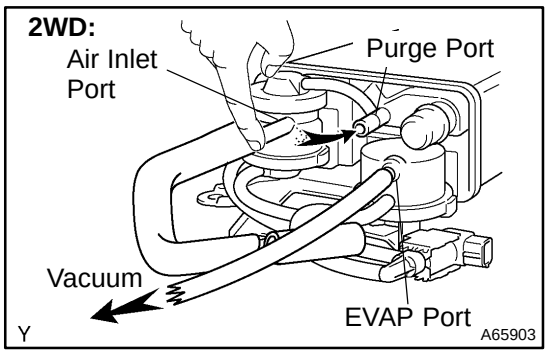

(5) While holding the air inlet port closed, apply vacuum (3.43 kPa, 25.7 mmHg, 1.01 in.Hg) to the EVAP port and check that air flows into the purge port.

If operation is not as spacified, replace the charcoal canister.

(6) Remove the hose and cap from vent port.

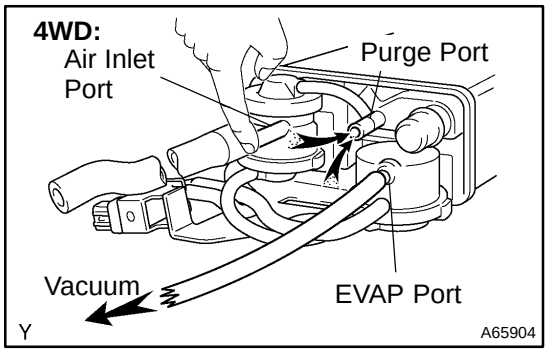

(c) Inspect VSV for Pressure Swiching Valve

(1) Using an ohmmeter, check that there is continuity between the terminals.

Resistance: 37 – 44 Ω at 20°C (68°F)

If there is no continuity, replace the VSV.

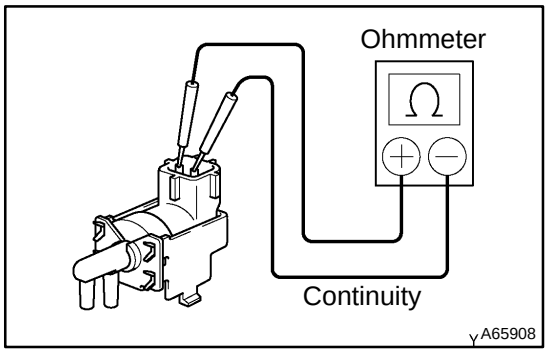

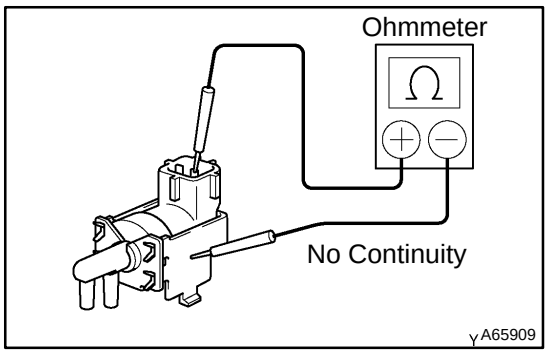

(2) Using an ohmmeter, check that there is no continuity between each terminal and the body.

If there is continuity, replace the VSV.

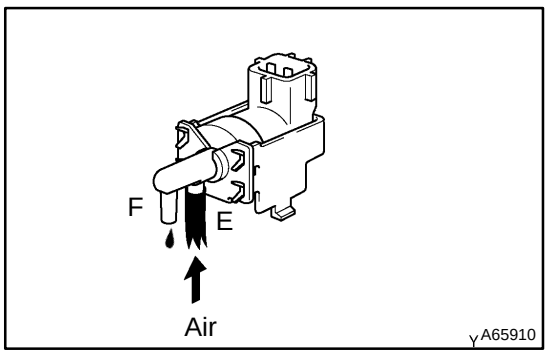

(3) Check that air does not flow from ports E to F.

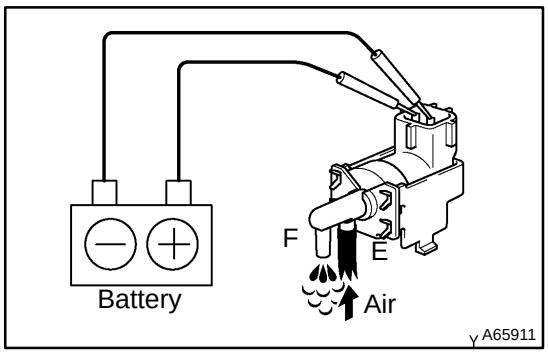

(4) Apply battery positive voltage across the terminals.
(5) Check that air flows from ports E to F.

If operation is not as specified, replace the VSV.

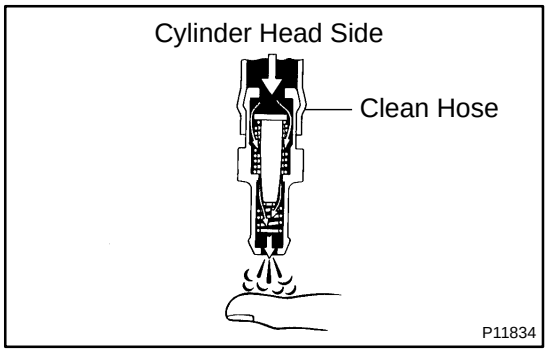

2. VENTILATION VALVE SUB–ASSY

(a) Install clean hose to the PCV valve.
(b) Inspect the PCV valve operation.
(1) Blow air into the cylinder head side, and check that air passes through easily.

CAUTION:
Do not suck air through the valve. Petroleum substances inside the valve air harmful.

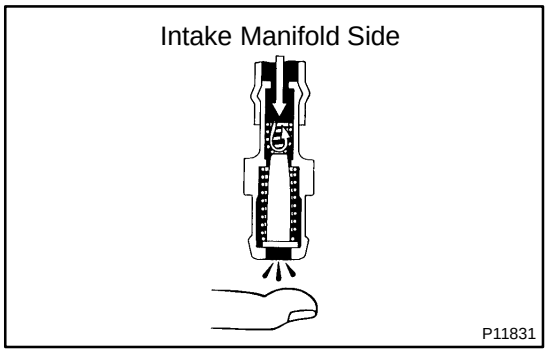

(2) Blow air into the intake manifold side, and check that air passes through with difficulty.

If operation is not as specified, replace the PCV valve.

(c) Remove clean hose from the PCV valve.

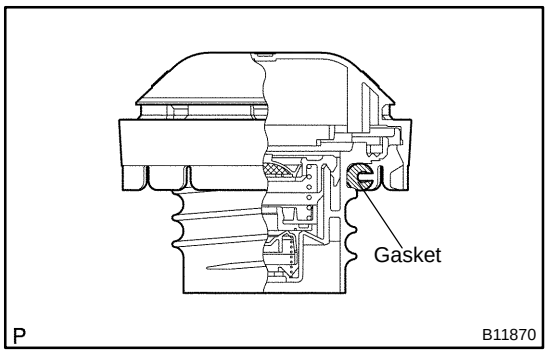

3. FUEL TANK CAP ASSY

(a) Visually check if cap and/or gasket are deformed or damaged.

If necessary, repair or replace the cap.

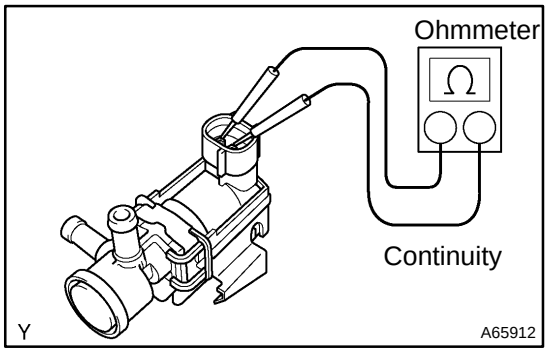

4. VACUUM SWITCHING VALVE NO.1

(a) Inspect VSV for evaporative emission (EVAP).
(1) Using an ohmmeter, check that there is continuity between the terminals.

Resistance: 27 – 33 Ω at 20°C (68°F)

If there is no continuity, replace the VSV.

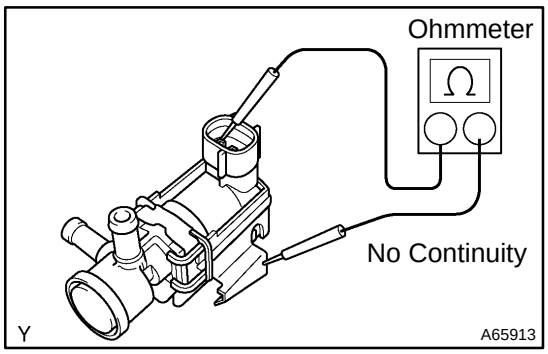

(2) Using an ohmmeter, check that there is no continuity between each terminal and the body.

If there is continuity, replace the VSV.

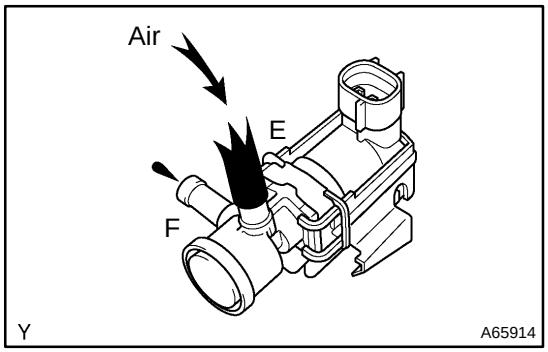

(3) Check that air flows from ports E to F.

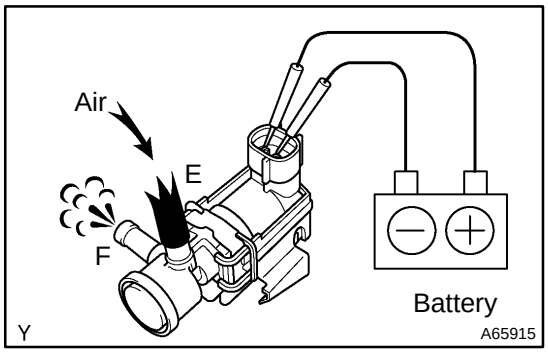

(4) Apply battery positive voltage across the terminals.

(5) Check that air does not flow from ports E to F.

If operation is not as specified, replace the VSV.

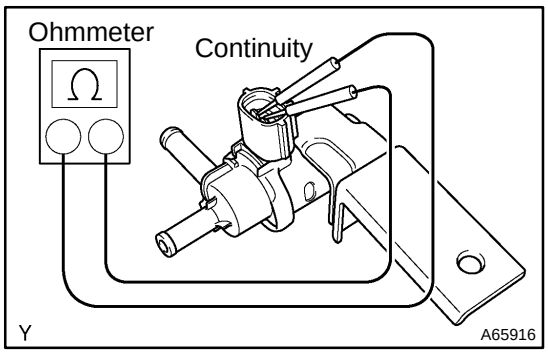

5. VACUUM SWITCHING VALVE ASSY NO.1

(a) Inspect VSV for Canister Closed valve (CCV).

(1) Using an ohmmeter, check that there is continuity between the terminals.

Resistance: 25 – 30 Ω at 20°C (68°F)

If there is no continuity, replace the VSV.

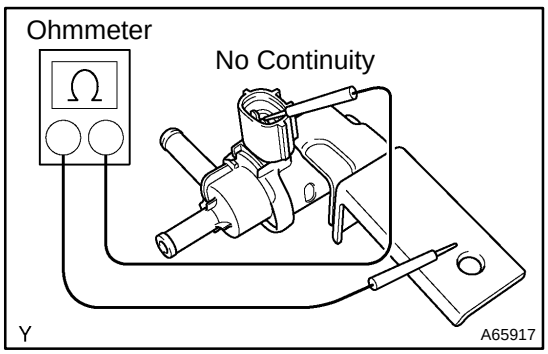

(2) Using an ohmmeter, check that there is no continuity between each terminal and the body.

If there is continuity, replace the VSV.

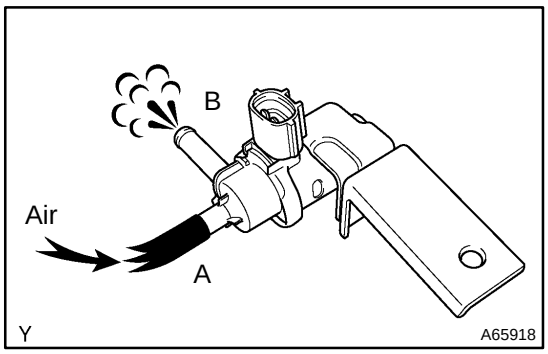

(3) Check that air flows from ports A to B.

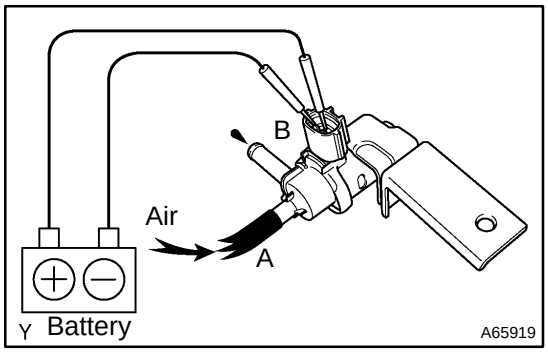

(4) Apply battery positive voltage across the terminals.
(5) Check that air does not flow from ports A to B.

If operation is not as specified, replace the VSV.

EMISSION CONTROL SYSTEM (1ZZ–FE)

1204S–01

ON–VEHICLE INSPECTION

1. INSPECT AIR–FUEL RATIO COMPENSATION SYSTEM

HINT:

You can also check the system by choosing ”DATA MONITOR”, then ”O_2 SENSOR OUTPUT VOLTAGE” on the monitor of the hand–held tester.

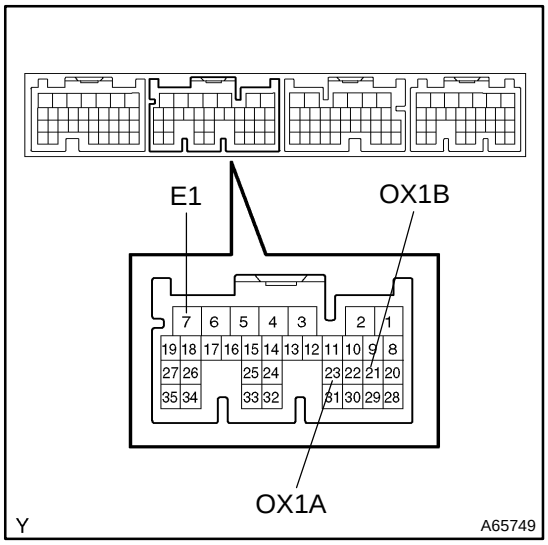

(a) Connect the hand–held tester to the terminal 23 (OX1A) ⇔ 7 (E1) and 21 (OX1B) ⇔ 7 (E1) of the ECM.

CAUTION:

Connect test leads from the back side of the connector with the ECU connected.

(b) Warm up the oxygen sensor with the engine speed at 2,500 rpm for approx. 2 minutes.

(c) Confirm that the voltage changes between 0V to 1V with the engine speed at 2,500 rpm.

OK:

The voltage changes more than 8 times in 10 seconds.

CAUTION:

- **Perform the check immediately after the end of the warming up.**
- **If not confirming the change of voltage, warming up the oxygen sensor again.**

2. INSPECT FUEL CUT OFF RPM

(a) Increase the engine speed to at least 3,500 rpm.

(b) Use a sound scope to check for injector operating noise.

(c) Check that when the throttle lever is released, injector operation noise stops momentarily and then resumes.

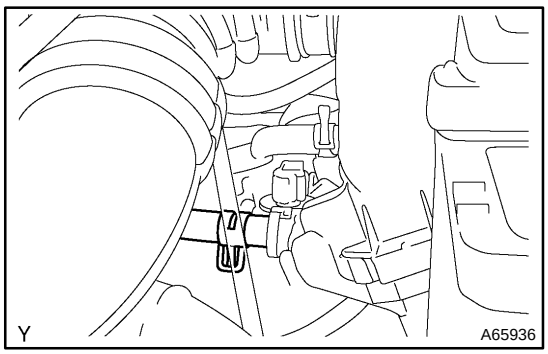

3. INSPECT EVAPORATIVE EMISSION CONTROL SYSTEM

(a) After starting the engine, disconnect the vacuum hose shown in the illustration.

(b) Confirm vacuum occurs at the vsv port, when choosing ”ACTIVE TEST” and ”PURGE VSV” according to the display on hand–held tester.

(c) Finish ”ACTIVE TEST”, then connect the vacuum hose again.

(d) After going to ”ECM DATA MONITOR” on the hand–held tester, choose ”PURGE VSV” to check the operation of the purge VSV.

(e) After warm up the engine and drive the vehicle, confirm the VSV turns on from off.

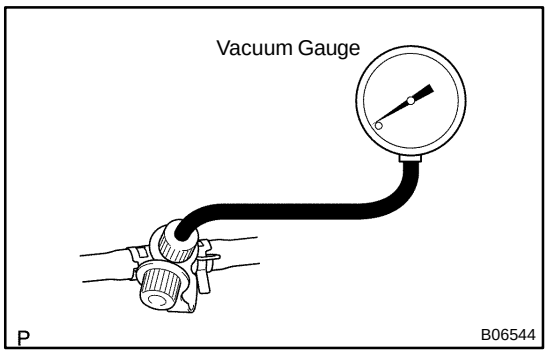

4. INSPECT EVAP SYSTEM LINE

(a) Warm up the engine and stop the engine. Allow the engine to warm up to normal operating temperature.

(b) Install a vacuum gauge (EVAP control system test equipment vacuum gauge) to the EVAP service port on the purge line.

(c) TOYOTA Hand–Held Tester:
Forced driving of the VSV for the EVAP.
(1) Connect a TOYOTA hand–held tester to the DLC3
(2) Start the engine.
(3) Push the TOYOTA hand–held tester main switch ON.
(4) Use the ACTIVE TEST mode on the TOYOTA hand–held tester to operate the VSV for the EVAP.

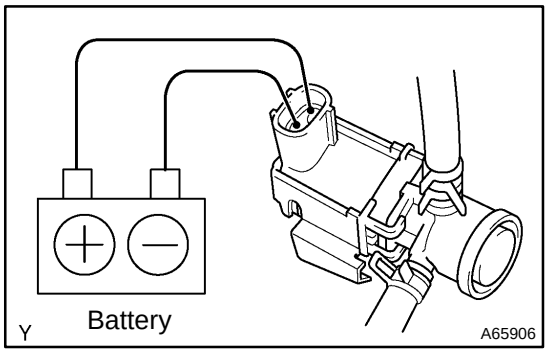

(d) If you have no TOYOTA Hand–Held Tester:
Forced driving of the VSV for the EVAP.
(1) Disconnect the VSV connector for the EVAP.
(2) Connect the positive (+) and negative (–) leads from the battery to the VSV terminals for the EVAP.
(3) Start the engine.

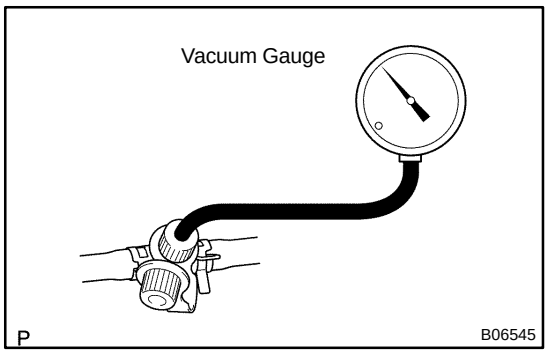

(e) Check the vacuum at idle
Vacuum:
Maintain at 0.368 – 19.713 in.Hg (5 –268 in.Aq) for over 5 seconds.

HINT:
If the vacuum does not change, you can conclude that the hose connecting the VSV to the service port has come loose or is blocked, or the VSV is malfunctioning.

(f) TOYOTA Hand–Held Tester:
Conclude forced driving of the VSV for the EVAP.
(1) Stop the engine.
(2) Disconnect the TOYOTA hand–held tester from the DLC3.

(g) If you have no TOYOTA Hand–Held tester:
Conclude forced driving of the VSV for the EVAP.
(1) Stop the engine.

(2) Disconnect the positive (+) and negative (–) leads from the battery from the VSV terminals for the EVAP.

(3) Connect the VSV connector for the EVAP.

(h) Disconnect the vacuum gauge from the EVAP service port on the purge line.

(i) Connect a pressure gauge to the EVAP service port on the purge line.

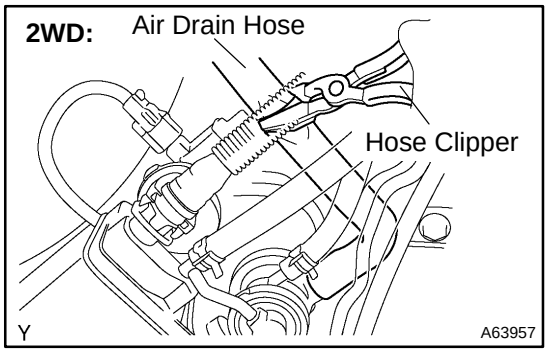

(j) Check the pressure.

(1) Close off the air drain hose at the marked position of the canister with a hose clipper or similar instrument.

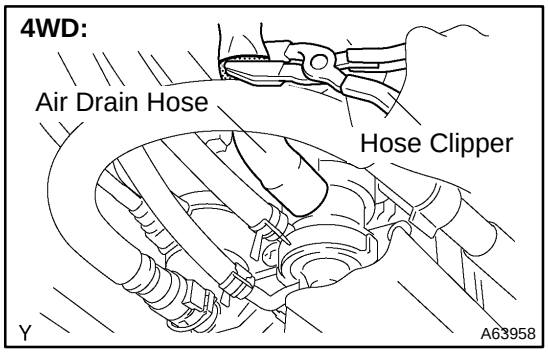

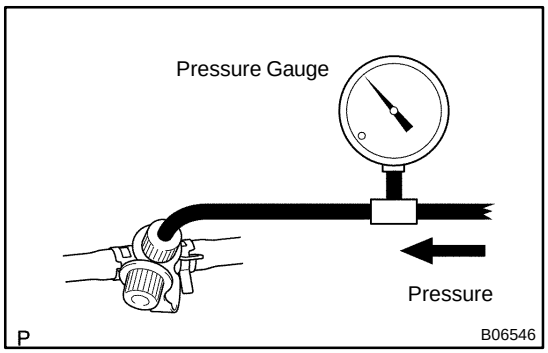

(2) Add the pressure (13.5 – 15.5 in. Aq) from the EVAP service port.

Pressure:

2 minutes after the pressure is added, the gauge should be over 7.7–8.8 in.Aq.

HINT:

If you can not add pressure, you can conclude that the hose connecting the VSV – canister – fuel tank has slipped off or the VSV is open.

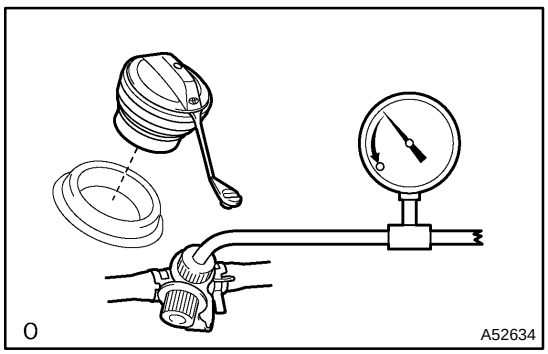

(3) Check if the pressure decreases when the fuel tank cap is removed while adding pressure.

HINT:

If the pressure dose not decrease when the filler cap is removed, then you can conclude that the hose connecting the service port to the fuel tank is blocked, etc.

(k) Disconnect the pressure gauge from the EVAP service port on the purge line.

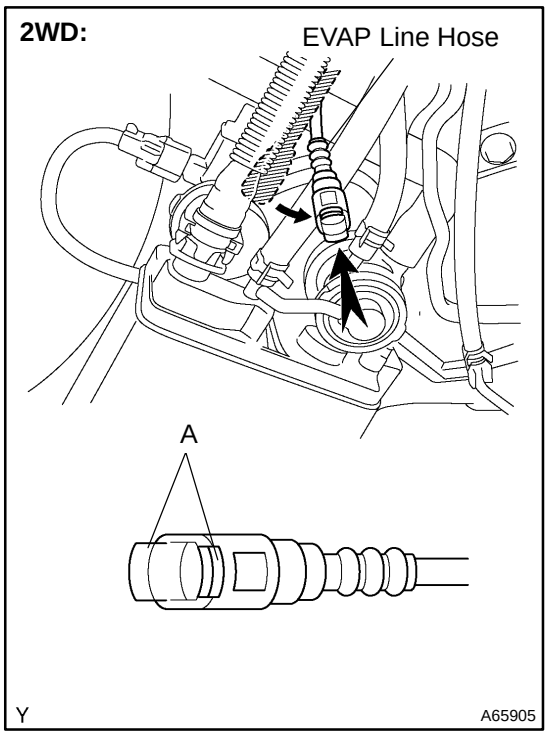

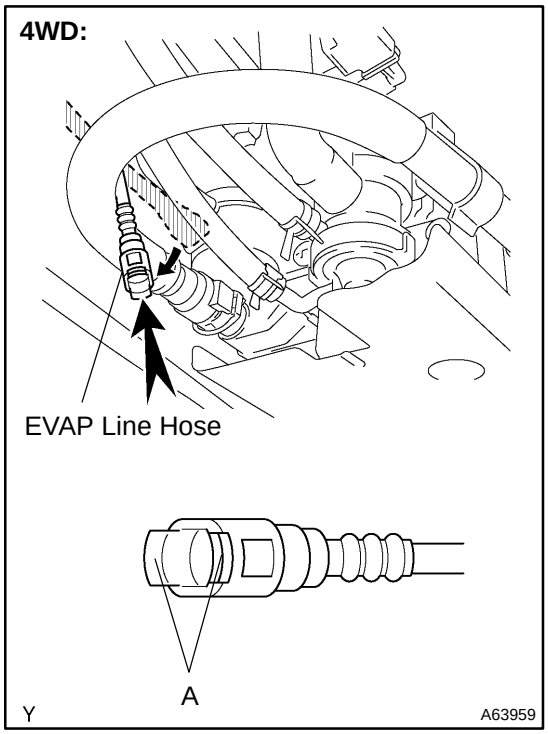

5. CHECK AIRTIGHTNESS IN FUEL TANK AND FILLER PIPE

(a) Disconnect the EVAP line hose from the charcoal canister.
  (1) Pinch portion A.
  (2) Pull out the connector.

(b) Pressurize and make the internal pressure in the fuel tank 4 kPa (41 gf/cm^2, 0.58 psi).

(c) Check that the internal pressure of the fuel tank can be hold for 1 minute.

(d) Check the connected portions of each hose and pipe.

(e) Check the installed parts on the fuel tank.

If there is no abnormality, replace the fuel tank and filler pipe.

(f) Reconnect the EVAP line hose to the charcoal canister.

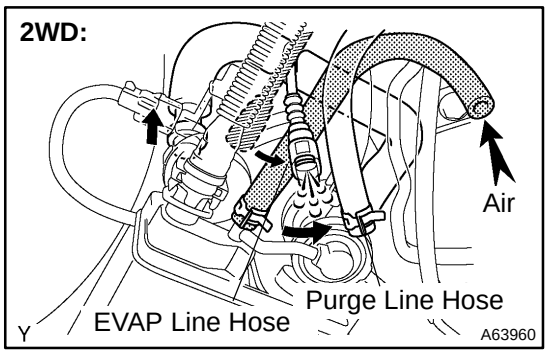

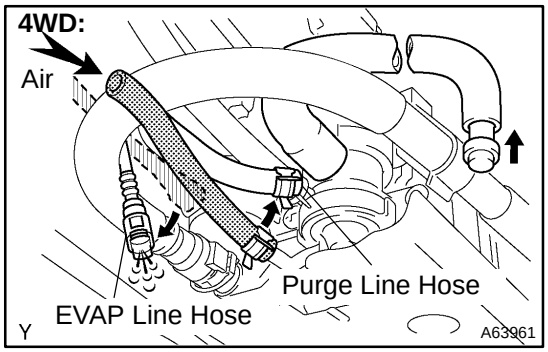

6. INSPECT FUEL CUT OFF VALVE AND FILL CHECK VALVE

(a) Disconnect the purge line hose and EVAP line hose from the charcoal canister.

(b) Plug the cap to the air drain hose.

(c) Pressurize 4 kPa (41 gf/cm^2, 0.58 psi) to the purge port and check that there is ventilation through the EVAP line hose.

HINT:

In the condition that the fuel is full, as the float value of the fill check valve is closed and has no ventilation, it is necessary to check the fuel amount (volume).

(d) Check if there is anything struck in the vent line hose and EVAP line hose.

If there is no stuck in hoses, replace the fuel cut off valve and fill check valve.

(e) Reconnect the purge line hose and EVAP line hose to the charcoal canister.

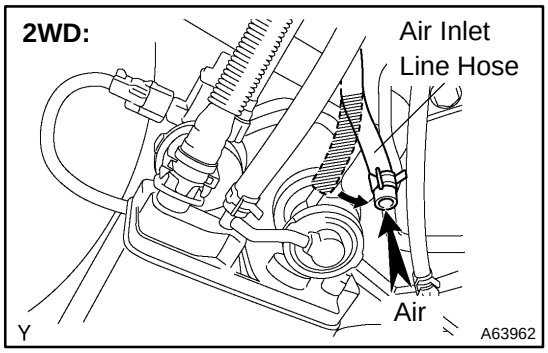

7. CHECK AIR INLET LINE

(a) Disconnect the air inlet line hose from the charcoal canister.

(b) Check that there is ventilation in the air inlet line.

(c) Reconnect the air inlet line hose to the charcoal canister.

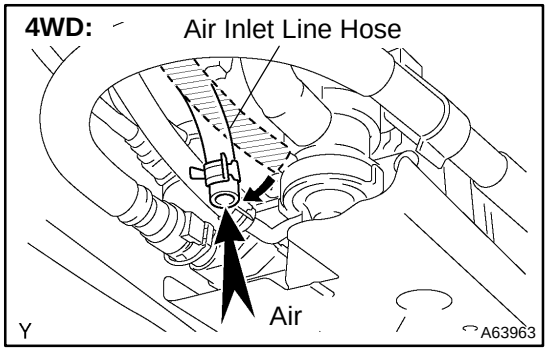

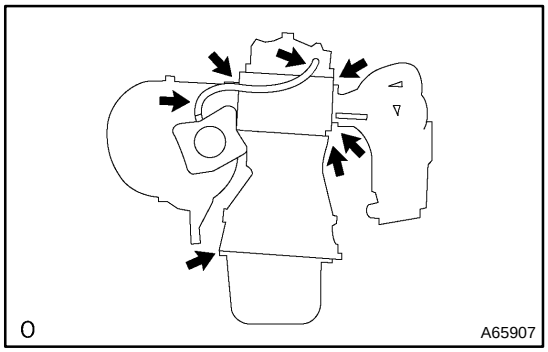

8. VISUALLY INSPECT HOSES, CONNECTIONS AND GASKETS

(a) Check for cracks, leaks or damage.

HINT:

Separation of the engine oil dipstick, oil filler cap, PCV hose, etc. may cause the engine to run out of turn. Disconnection, looseness or cracks in the parts of the air induction system between the throttle body and cylinder head will allow air suction and cause the engine to run out of turn.

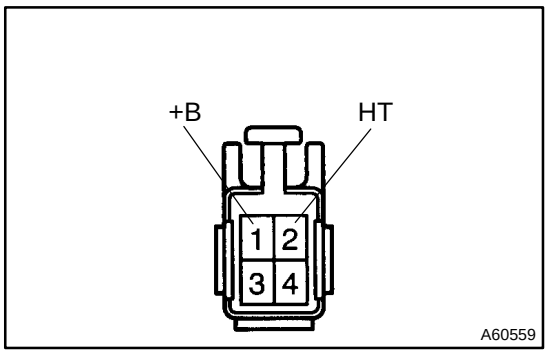

9. INSPECT HEATER RESISTANCE OF HEATED OXYGEN SENSOR

(a) Disconnect the oxygen sensor connector.

(b) Using an ohmmeter, measure the resistance between the terminals HT and +B.

Resistance: 11 – 16 Ω at 20°C (68°F)

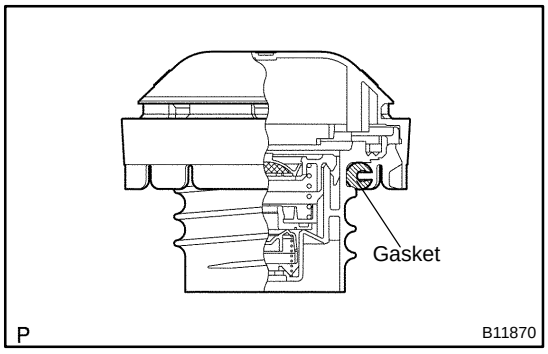

10. INSPECT FUEL TANK CAP

(a) Visually check if the cap and/or gasket are deformed or damaged.

INSPECTION

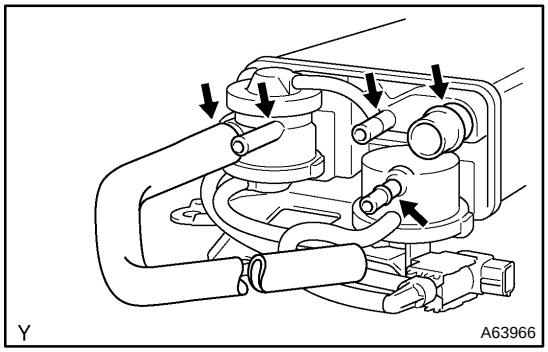

1. CHARCOAL CANISTER ASSY

(a) Visually check the charcoal canister for cracks or damage.

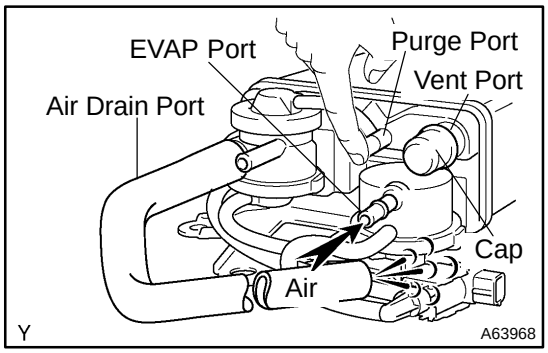

(b) Inspect the charcoal canister operation.

(1) Plug the vent port with the cap.

(2) While holding the purge port closed, blow air (1.76 kPa, 18 gf/cm^2, 0.26 psi) into the EVAP port and check that air flows from the air drain port.

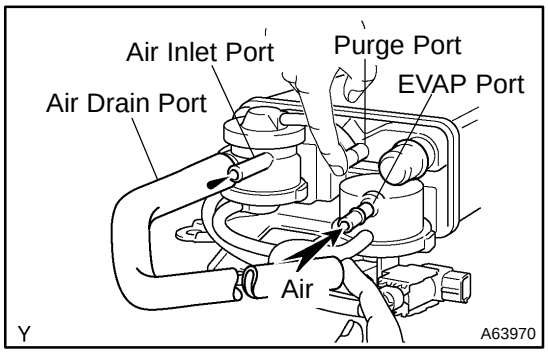

(3) While holding the purge port and the air drain port closed, blow air (1.76 kPa, 18 gf/cm^2, 0.26 psi) into the EVAP port and check that air does not flow from the air inlet port.

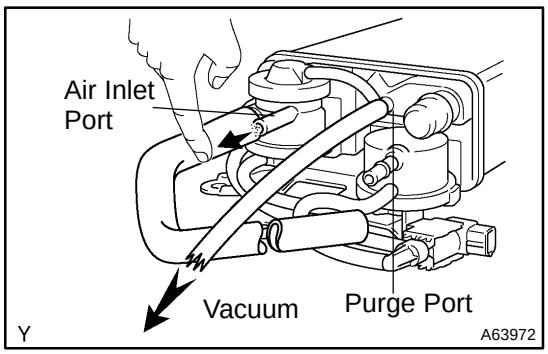

(4) Apply vaccum (3.43 kPa, 25.7 mmHg, 1.01 in.Hg) to the purge port, check that the vacuum dose not decrease when the air inlet port is closed, and check that the vacuum decreases when the air inlet port is released.

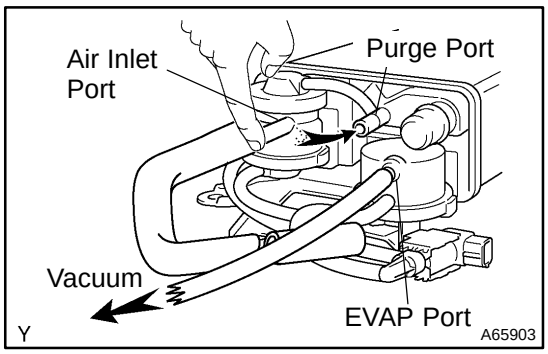

(5) While holding the air inlet port closed, apply vacuum (3.43 kPa, 25.7 mmHg, 1.01 in.Hg) to the EVAP port and check that air flows into the purge port.

If operation is not as spacified, replace the charcoal canister.

(6) Remove the hose and cap from vent port.

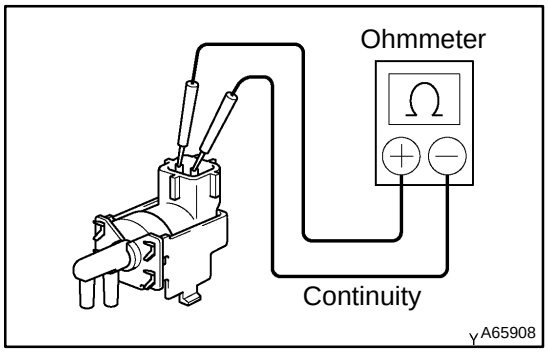

(c) Inspect VSV for Pressure Swiching Valve

(1) Using an ohmmeter, check that there is continuity between the terminals.

Resistance: 37 – 44 Ω at 20°C (68°F)

If there is no continuity, replace the VSV.

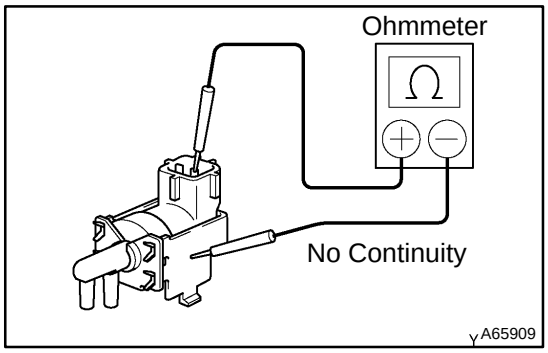

(2) Using an ohmmeter, check that there is no continuity between each terminal and the body.

If there is continuity, replace the VSV.

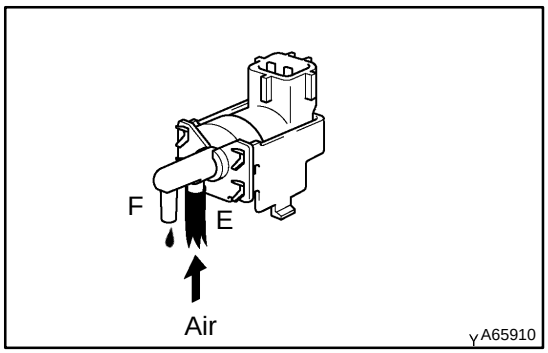

(3) Check that air does not flow from ports E to F.

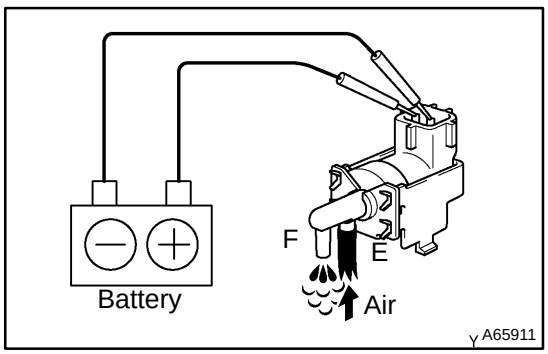

(4) Apply battery positive voltage across the terminals.

(5) Check that air flows from ports E to F.

If operation is not as specified, replace the VSV.

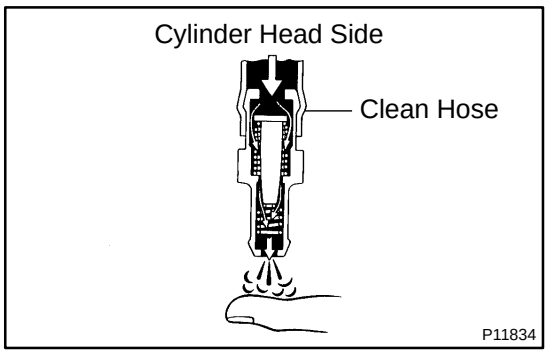

2. VENTILATION VALVE SUB–ASSY

(a) Install clean hose to the PCV valve.

(b) Inspect the PCV valve operation.

(1) Blow air into the cylinder head side, and check that air passes through easily.

CAUTION:

Do not suck air through the valve. Petroleum substances inside the valve air harmful.

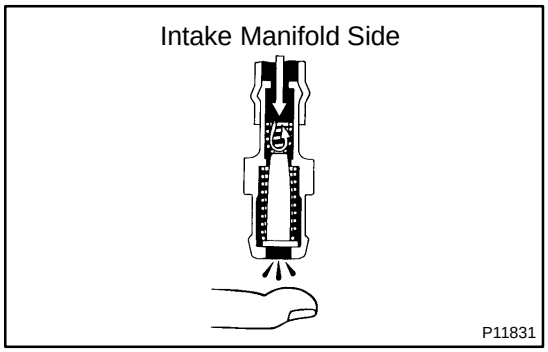

(2) Blow air into the intake manifold side, and check that air passes through with difficulty.

If operation is not as specified, replace the PCV valve.

(c) Remove clean hose from the PCV valve.

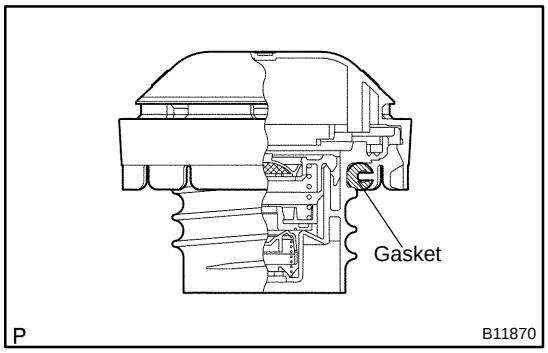

3. FUEL TANK CAP ASSY

(a) Visually check if cap and/or gasket are deformed or damaged.

If necessary, repair or replace the cap.

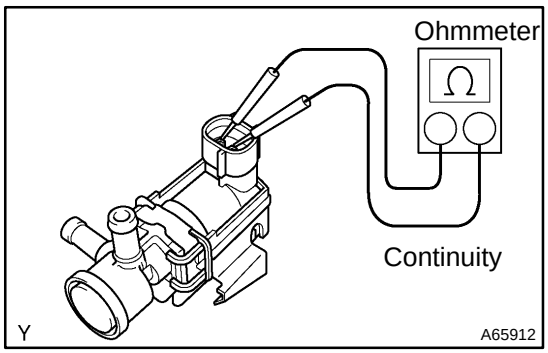

4. VACUUM SWITCHING VALVE NO.1

(a) Inspect VSV for evaporative emission (EVAP).

(1) Using an ohmmeter, check that there is continuity between the terminals.

Resistance: 27 – 33 Ω at 20°C (68°F)

If there is no continuity, replace the VSV.

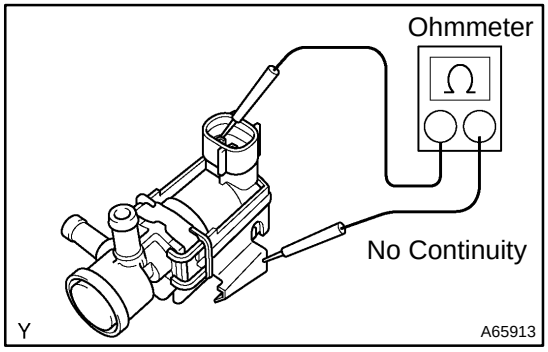

(2) Using an ohmmeter, check that there is no continuity between each terminal and the body.

If there is continuity, replace the VSV.

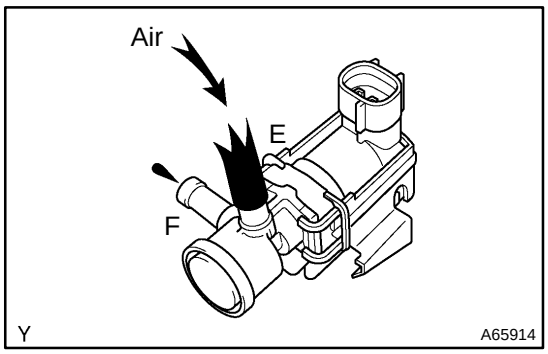

(3) Check that air flows from ports E to F.

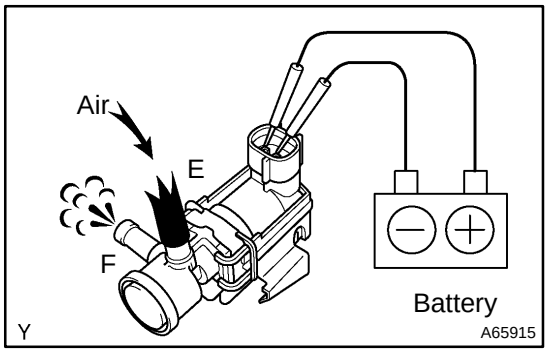

(4) Apply battery positive voltage across the terminals.
(5) Check that air does not flow from ports E to F.

If operation is not as specified, replace the VSV.

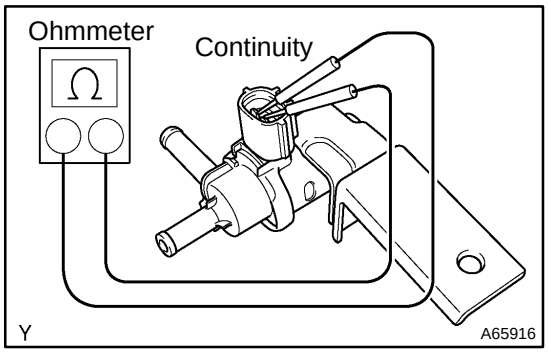

5. VACUUM SWITCHING VALVE ASSY NO.1

(a) Inspect VSV for Canister Closed valve (CCV).
(1) Using an ohmmeter, check that there is continuity between the terminals.

Resistance: 25 – 30 Ω at 20°C (68°F)

If there is no continuity, replace the VSV.

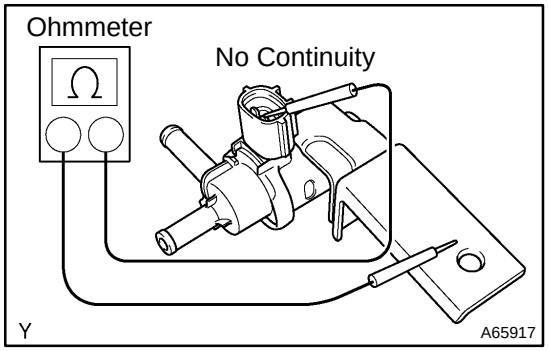

(2) Using an ohmmeter, check that there is no continuity between each terminal and the body.

If there is continuity, replace the VSV.

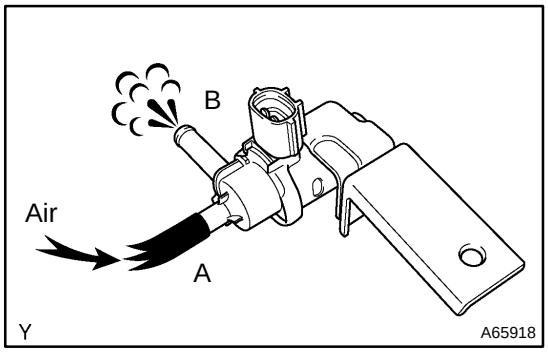

(3) Check that air flows from ports A to B.

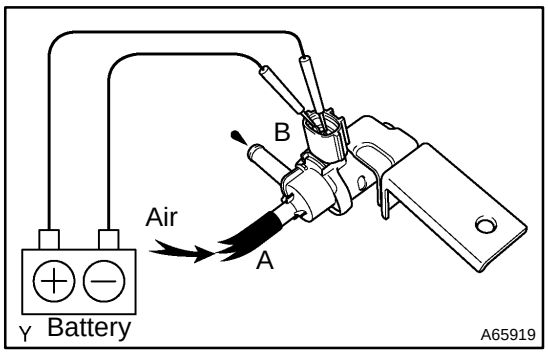

(4) Apply battery positive voltage across the terminals.
(5) Check that air does not flow from ports A to B.

If operation is not as specified, replace the VSV.

EMISSION CONTROL SYSTEM (2ZZ–GE)

1204D–02

ON–VEHICLE INSPECTION

1. INSPECT AIR–FUEL RATIO COMPENSATION SYSTEM

HINT:

You can also check the system by choosing ”DATA MONITOR”, then ”O_2 SENSOR OUTPUT VOLTAGE” on the monitor of the hand–held tester.

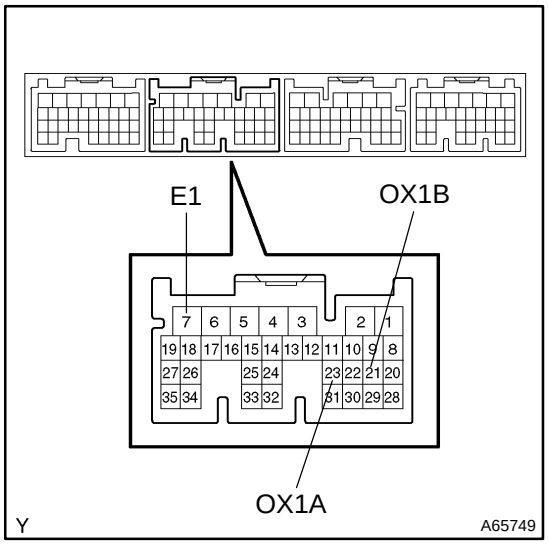

(a) Connect the hand–held tester to the terminal 23 (OX1A) ⇔ 7 (E1) and 21 (OX1B) ⇔ 7 (E1) of the ECM.

CAUTION:

Connect test leads from the back side of the connector with the ECU connected.

(b) Warm up the oxygen sensor with the engine speed at 2,500 rpm for approx. 2 minutes.

(c) Confirm that the voltage changes between 0V to 1V with the engine speed at 2,500 rpm.

OK:

The voltage changes more than 8 times in 10 seconds.

CAUTION:

- **Perform the check immediately after the end of the warming up.**
- **If not confirming the change of voltage, warming up the oxygen sensor again.**

2. INSPECT FUEL CUT OFF RPM

(a) Increase the engine speed to at least 3,500 rpm.

(b) Use a sound scope to check for injector operating noise.

(c) Check that when the throttle lever is released, injector operation noise stops momentarily and then resumes.

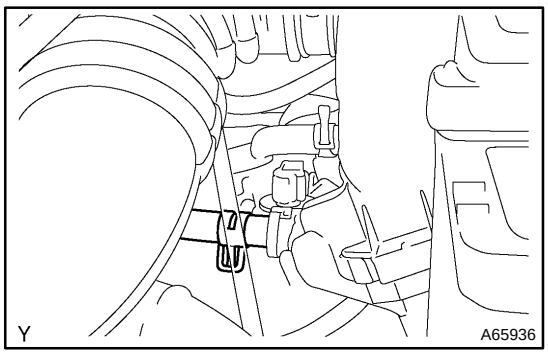

3. INSPECT EVAPORATIVE EMISSION CONTROL SYSTEM

(a) After starting the engine, disconnect the vacuum hose shown in the illustration.

(b) Confirm vacuum occurs at the vsv port, when choosing ”ACTIVE TEST” and ”PURGE VSV” according to the display on hand–held tester.

(c) Finish ”ACTIVE TEST”, then connect the vacuum hose again.

(d) After going to ”ECM DATA MONITOR” on the hand–held tester, choose ”PURGE VSV” to check the operation of the purge VSV.

(e) After warm up the engine and drive the vehicle, confirm the VSV turns on from off.

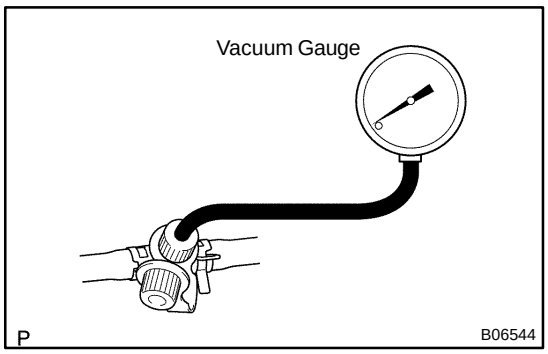

4. INSPECT EVAP SYSTEM LINE

(a) Warm up the engine and stop the engine. Allow the engine to warm up to normal operating temperature.

(b) Install a vacuum gauge (EVAP control system test equipment vacuum gauge) to the EVAP service port on the purge line.

(c) TOYOTA Hand–Held Tester:
Forced driving of the VSV for the EVAP.
(1) Connect a TOYOTA hand–held tester to the DLC3
(2) Start the engine.
(3) Push the TOYOTA hand–held tester main switch ON.
(4) Use the ACTIVE TEST mode on the TOYOTA hand–held tester to operate the VSV for the EVAP.

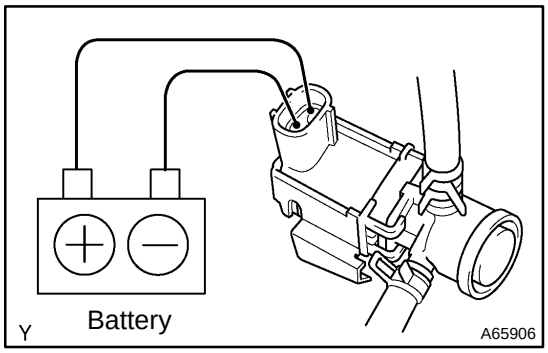

(d) If you have no TOYOTA Hand–Held Tester:
Forced driving of the VSV for the EVAP.
(1) Disconnect the VSV connector for the EVAP.
(2) Connect the positive (+) and negative (–) leads from the battery to the VSV terminals for the EVAP.
(3) Start the engine.

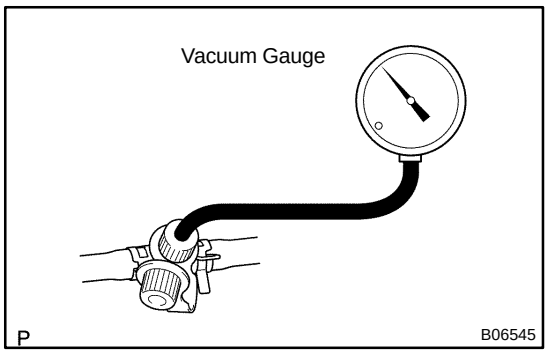

(e) Check the vacuum at idle
Vacuum:
Maintain at 0.368 – 19.713 in.Hg (5 –268 in.Aq) for over 5 seconds.

HINT:
If the vacuum does not change, you can conclude that the hose connecting the VSV to the service port has come loose or is blocked, or the VSV is malfunctioning.

(f) TOYOTA Hand–Held Tester:
Conclude forced driving of the VSV for the EVAP.
(1) Stop the engine.
(2) Disconnect the TOYOTA hand–held tester from the DLC3.

(g) If you have no TOYOTA Hand–Held tester:
Conclude forced driving of the VSV for the EVAP.
(1) Stop the engine.

(2) Disconnect the positive (+) and negative (–) leads from the battery from the VSV terminals for the EVAP.

(3) Connect the VSV connector for the EVAP.

(h) Disconnect the vacuum gauge from the EVAP service port on the purge line.

(i) Connect a pressure gauge to the EVAP service port on the purge line.

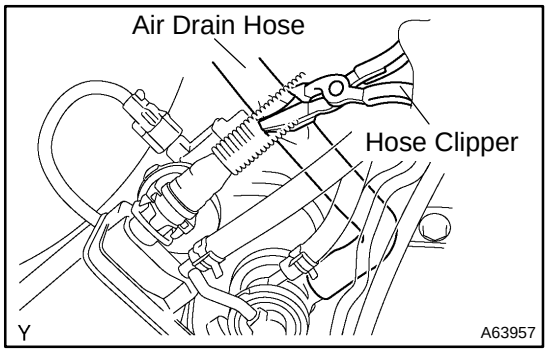

(j) Check the pressure.

(1) Close off the air drain hose at the marked position of the canister with a hose clipper or similar instrument.

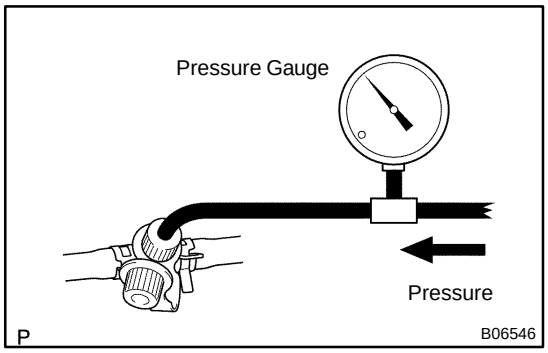

(2) Add the pressure (13.5 – 15.5 in. Aq) from the EVAP service port.

Pressure:

2 minutes after the the pressure is added, the gauge should be over 7.7–8.8 in.Aq.

HINT:

If you can not add pressure, you can conclude that the hose connecting the VSV – canister – fuel tank has slipped off or the VSV is open.

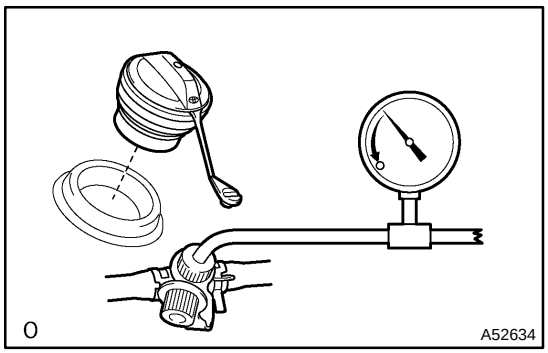

(3) Check if the pressure decreases when the fuel tank cap is removed while adding pressure.

HINT:

If the pressure dose not decrease when the filler cap is removed, then you can conclude that the hose connecting the service port to the fuel tank is blocked, etc.

(k) Disconnect the pressure gauge from the EVAP service port on the purge line.

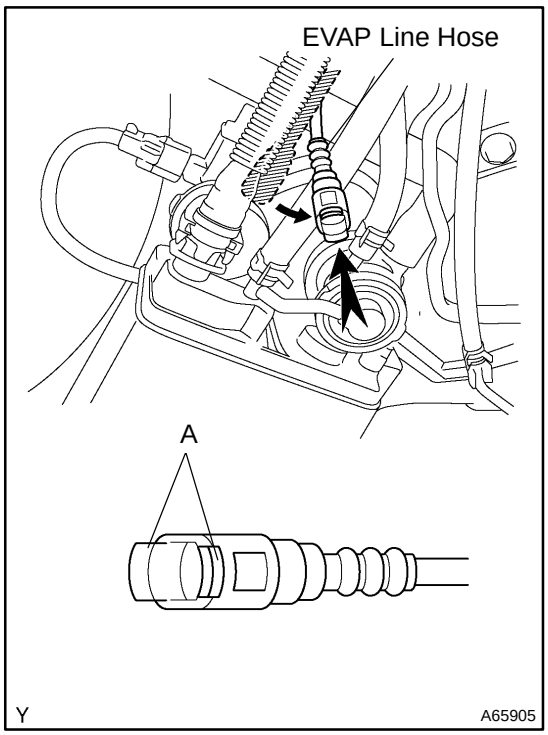

5. CHECK AIRTIGHTNESS IN FUEL TANK AND FILLER PIPE

(a) Disconnect the EVAP line hose from the charcoal canister.
  (1) Pinch portion A.
  (2) Pull out the connector.
(b) Pressurize and make the internal pressure in the fuel tank 4 kPa (41 gf/cm^2, 0.58 psi).
(c) Check that the internal pressure of the fuel tank can be hold for 1 minute.
(d) Check the connected portions of each hose and pipe.
(e) Check the installed parts on the fuel tank.

If there is no abnormality, replace the fuel tank and filler pipe.

(f) Reconnect the EVAP line hose to the charcoal canister.

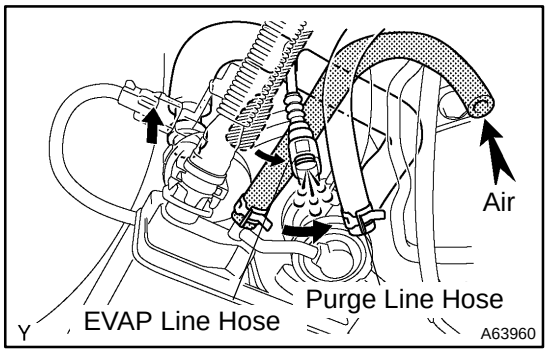

6. INSPECT FUEL CUT OFF VALVE AND FILL CHECK VALVE

(a) Disconnect the purge line hose and EVAP line hose from the charcoal canister.
(b) Plug the cap to the air drain hose.
(c) Pressurize 4 kPa (41 gf/cm^2, 0.58 psi) to the purge port and check that there is ventilation through the EVAP line hose.

HINT:

In the condition that the fuel is full, as the float value of the fill check valve is closed and has no ventilation, it is necessary to check the fuel amount (volume).

(d) Check if there is anything struck in the vent line hose and EVAP line hose.

If there is no stuck in hoses, replace the fuel cut off valve and fill check valve.

(e) Reconnect the purge line hose and EVAP line hose to the charcoal canister.

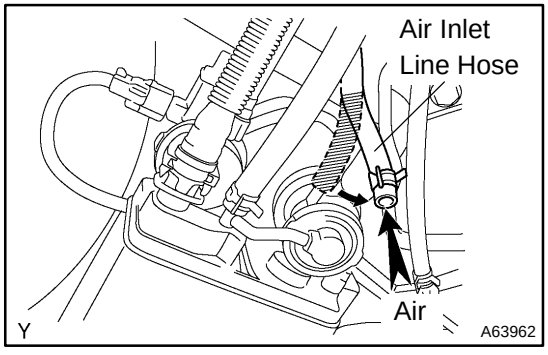

7. CHECK AIR INLET LINE

(a) Disconnect the air inlet line hose from the charcoal canister.
(b) Check that there is ventilation in the air inlet line.
(c) Reconnect the air inlet line hose to the charcoal canister.

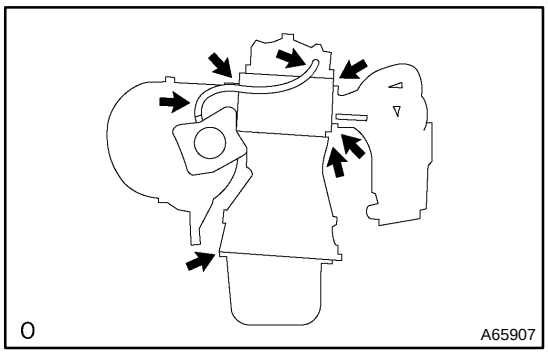

8. VISUALLY INSPECT HOSES, CONNECTIONS AND GASKETS

(a) Check for cracks, leaks or damage.

HINT:

Separation of the engine oil dipstick, oil filler cap, PCV hose, etc. may cause the engine to run out of turn. Disconnection, looseness or cracks in the parts of the air induction system between the throttle body and cylinder head will allow air suction and cause the engine to run out of turn.

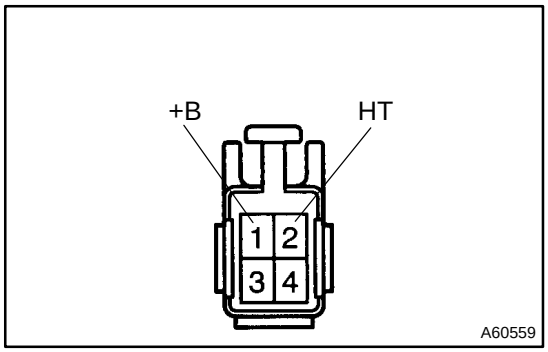

9. INSPECT HEATER RESISTANCE OF HEATED OXYGEN SENSOR

(a) Disconnect the oxygen sensor connector.

(b) Using an ohmmeter, measure the resistance between the terminals HT and +B.

Resistance: 11 – 16 Ω at 20°C (68°F)

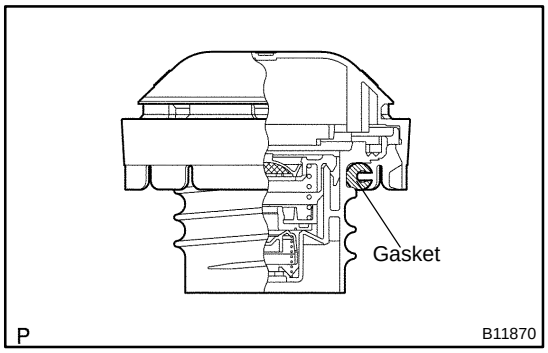

10. INSPECT FUEL TANK CAP

(a) Visually check if the cap and/or gasket are deformed or damaged.

CYLINDER HEAD ASSY (1ZZ–FE)

140Q6–03

COMPONENTS

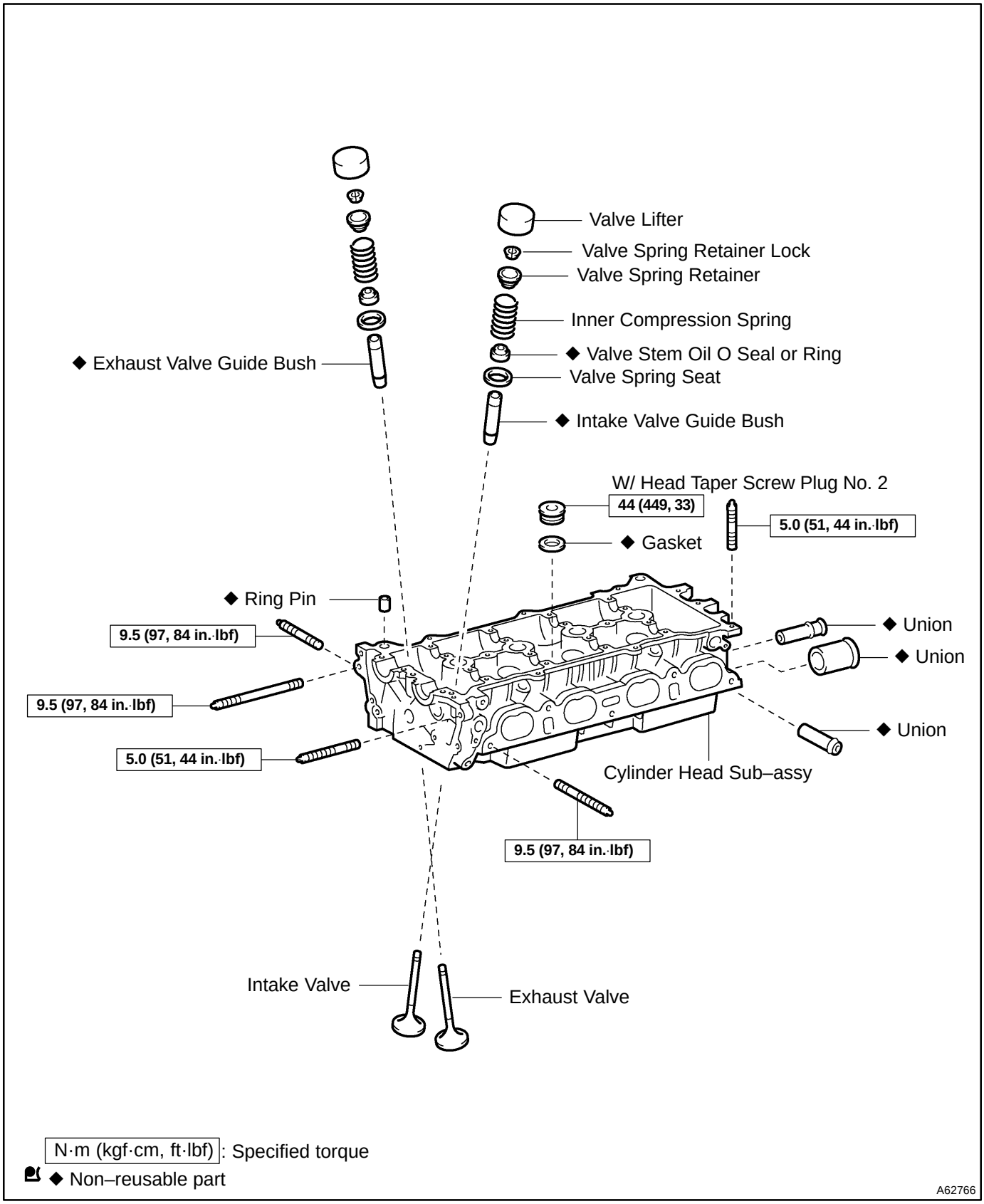

140Q7–03

OVERHAUL

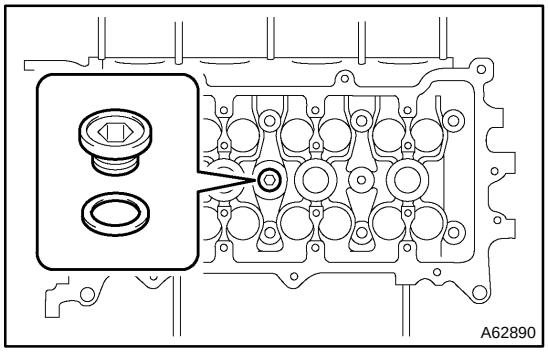

1. REMOVE W/HEAD TAPER SCREW PLUG NO.2

(a) Using a socket hexagon wench 10, remove the taper screw plug and gasket.

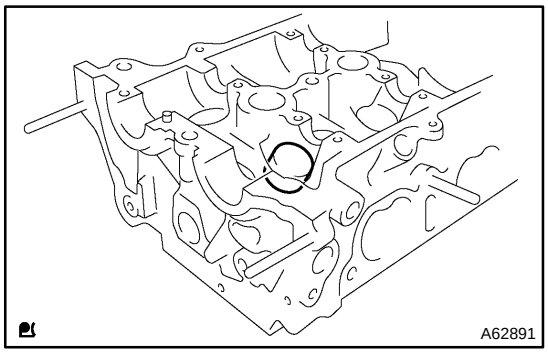

2. REMOVE VALVE LIFTER

(a) Remove the valve lifters from the cylinder head.

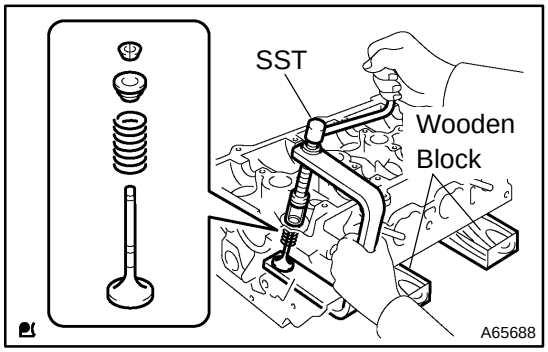

3. REMOVE VALVE

(a) Place the cylinder head on wooden blocks.

(b) Using SST, compress the inner compression spring and remove the 2 valve spring retainer locks.

SST 09202–70020 (09202–00010, 09202–01010, 09202–01020)

(c) Remove the valve spring retainers, inner compression springs and valves from the cylinder head.

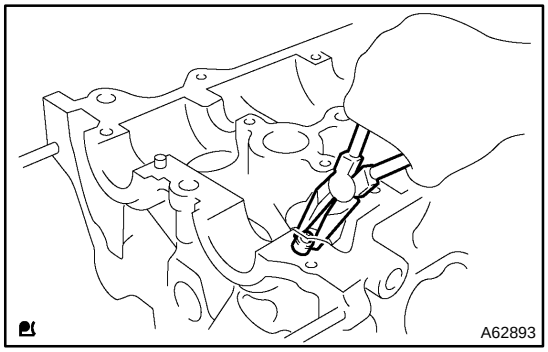

4. VALVE STEM OIL O SEAL OR RING

(a) Using a needle–nose pliers, remove the valve stem oil seals.

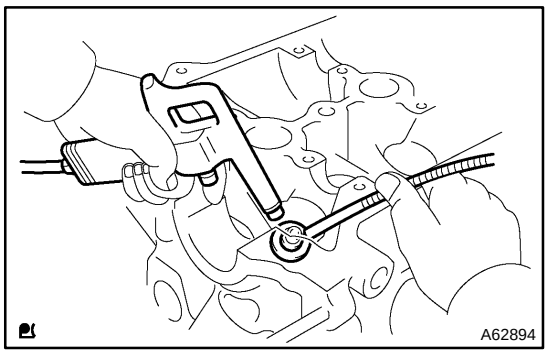

5. REMOVE VALVE SPRING SEAT

(a) Using a compressed air and a magnetic finger, remove the valve spring seats.

6. REMOVE STUD BOLT

(a) Using torx socket wrench E5 and E7, remove the 11 stud bolts.

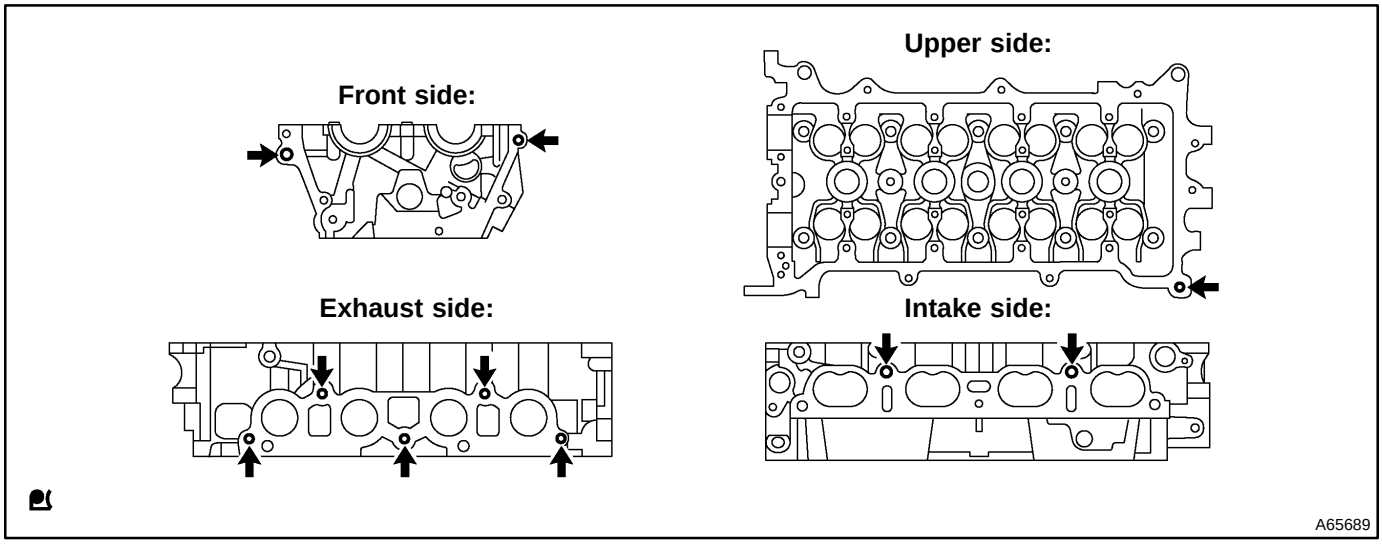

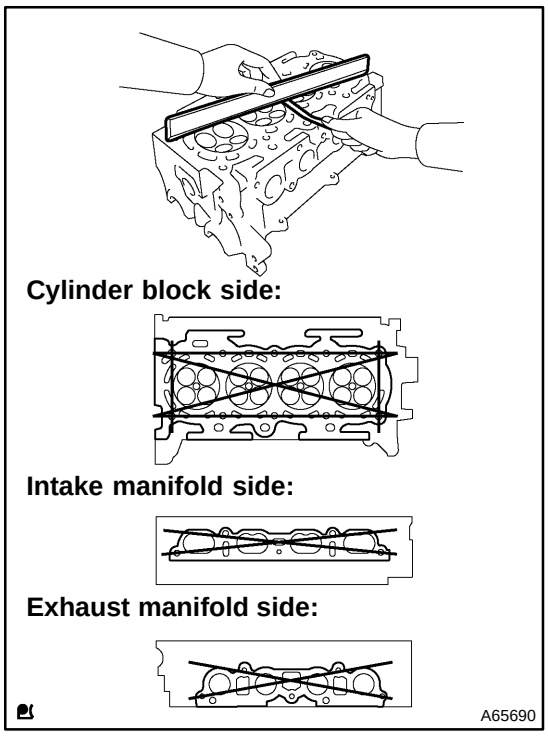

7. INSPECT CYLINDER HEAD FOR FLATNESS

(a) Using a precision straight edge and a feeler gauge, measure the surface contacting the cylinder block and the manifolds for warpage.

Maximum warpage:
Cylinder block side 0.05 mm (0.0020 in.)
Intake manifold side 0.10 mm (0.0039 in.)
Exhaust manifold side 0.10 mm (0.0039 in.)

If the warpage is greater than maximum, replace the cylinder head.

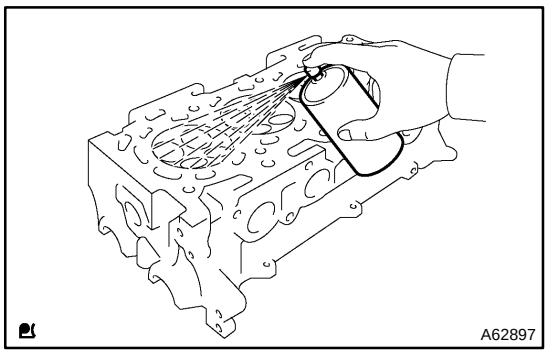

8. INSPECT CYLINDER HEAD FOR CRACKS

(a) Using a dye penetrate, check the combustion chamber, intake ports, exhaust ports and cylinder block surface for cracks.

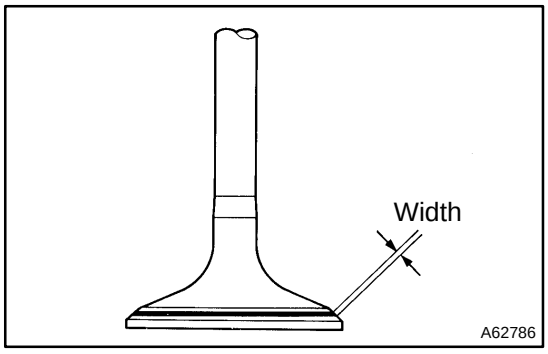

9. INSPECT VALVE SEATS

(a) Apply a light coat of prussian blue (or white lead) to the valve face.

(b) Lightly press the valve against the seat.

NOTICE:

Do not rotate valve.

(c) Check the valve face and seat according to the following procedure.

(1) If blue appears 360° around the face, the valve is concentric. If not, replace the valve.

(2) If blue appears 360° around the valve seat, the guide and face are concentric. If not, resurface the seat.

(3) Check that the seat contact is in the middle of the valve face with the width between 1.0 – 1.4 mm (0.039 – 0.055 in.).

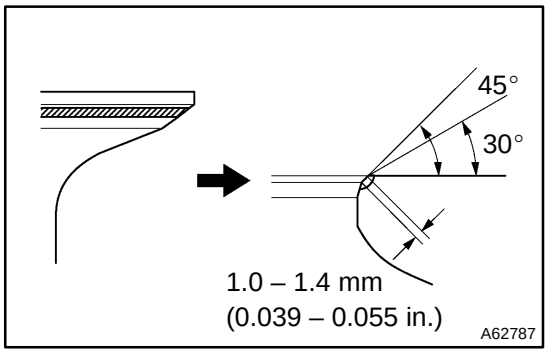

10. REPAIR VALVE SEATS

NOTICE:

Take off a cutter gradually to make smooth valve seats.

(a) If the seating is too high on the valve face, use 30° and 45° cutters to correct the seat.

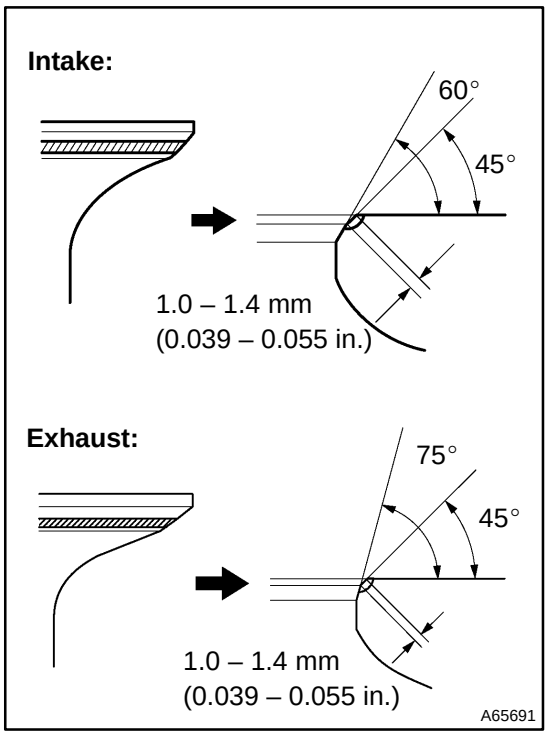

(b) Intake:
  (1) If the seating is too low on the valve face, use 60° and 45° cutters to correct the seat.

(c) Exhaust:
  (1) If the seating is too low on the valve face, use 75° and 45° cutters to correct the seat.

(d) Hand–lap the valve and valve seat with an abrasive compound.

(e) Check the valve seating position.

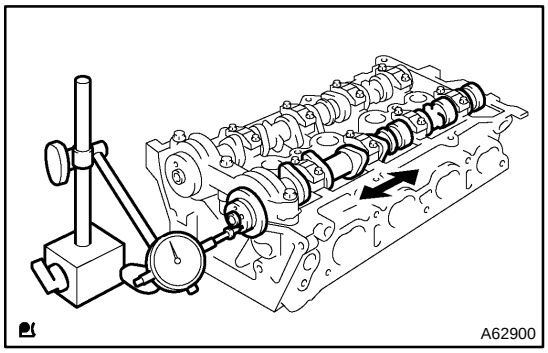

11. INSPECT CAMSHAFT THRUST CLEARANCE

(a) Install the 2 camshafts.

(b) Using a dial indicator, measure the thrust clearance while moving the camshaft back and forth.

Standard thrust clearance:
0.040 – 0.095 mm (0.0016 – 0.0037 in.)
Maximum thrust clearance: 0.110 mm (0.0043 in.)

If the thrust clearance is greater than maximum, replace the cylinder head. If damages are found on the camshaft thrust surfaces, the camshaft also has to be replaced.

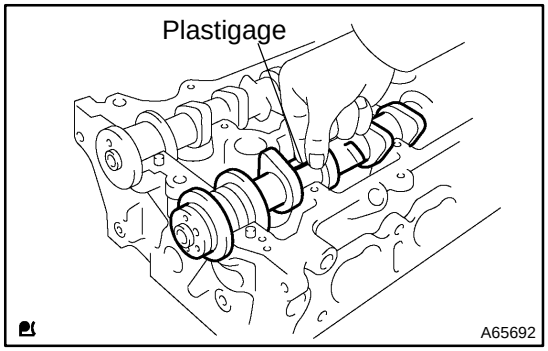

12. INSPECT CAMSHAFT OIL CLEARANCE

(a) Clean the bearing caps and camshaft journals.

(b) Place the camshafts on the cylinder head.

(c) Lay a strip of plastigage across each of the camshaft journal.

(d) Install the bearing caps. (See page 14–52)

NOTICE:
Do not turn the camshaft.

(e) Remove the bearing caps. (See page 14–52)

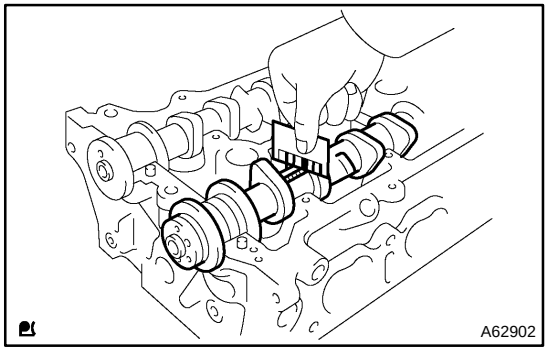

(f) Measure the plastigage at its widest point.

Standard oil clearance:
0.035 – 0.072 mm (0.0014 – 0.0028 in.)
Maximum oil clearance: 0.10 mm (0.0039 in.)

NOTICE:
Completely remove the plastigage after the measuring.

If the oil clearance is greater than maximum, replace the cylinder head.

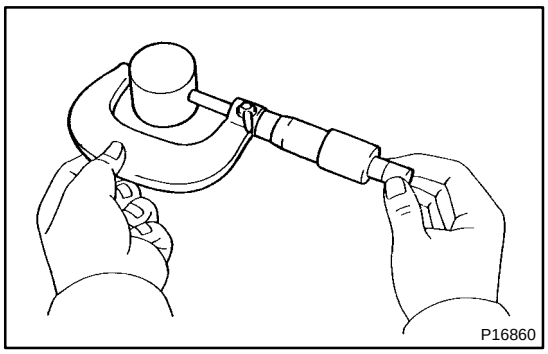

13. INSPECT VALVE LIFTER

(a) Using a micrometer, measure the valve lifter diameter.
Lifter diameter:
30.966 – 30.976 mm (1.2191 – 1.2195 in.)

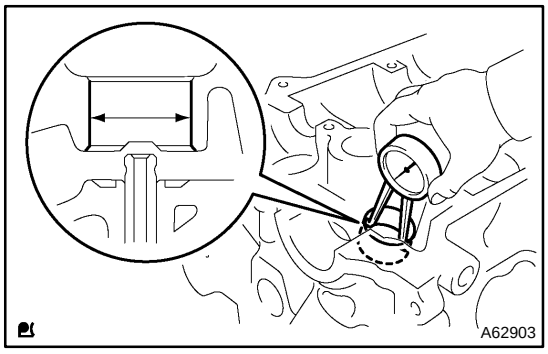

14. INSPECT VALVE LIFTER OIL CLEARANCE

(a) Using a caliper gauge, measure the valve lifter bore diameter of the cylinder head.
Lifter bore diameter:
31.000 – 31.025 mm (1.2205 – 1.2215 in.)

(b) Subtract the valve lifter diameter measurement from the valve lifter bore diameter measurement.
Standard oil clearance:
0.024 – 0.059 mm (0.0009 – 0.0023 in.)
Maximum oil clearance: 0.079 mm (0.0031 in.)

If the oil clearance is greater than maximum, replace the valve lifter.

If necessary, replace the cylinder head.

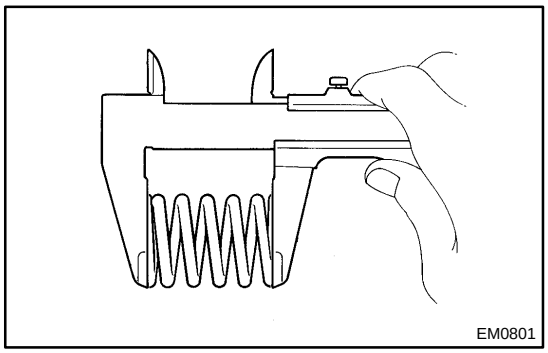

15. INSPECT INNER COMPRESSION SPRING

(a) Using a vernier caliper, measure the free length of the inner compression spring.
Free length: 43.40 mm (1.7087 in.)

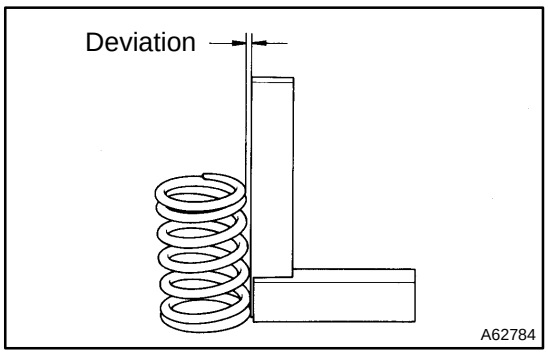

(b) Using a steel square, measure the deviation of the inner compression spring.
Maximum deviation: 1.6 mm (0.063 in.)
Maximum angle (reference): 2°

If the deviation is greater than maximum, replace the inner compression spring.

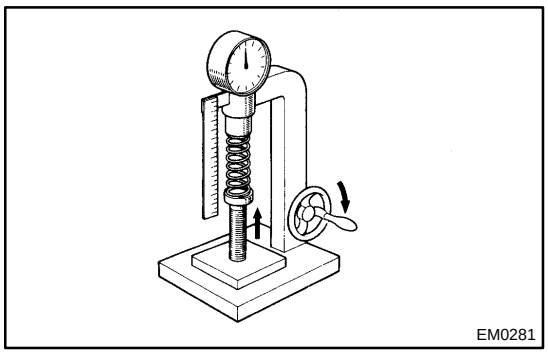
EM0281

(c) Using a spring tester, measure the tension of the inner compression spring at the specified installed length.
Installed tension:
158.6 – 175.4 N (16.2 – 17.9 kgf, 35.7 – 39.5 lbf)
at 33.6 mm (1.323 in.)
Maximum working tension:
335.3 – 370.7 N (34.2 – 37.8 kgf, 75.4 – 83.3 lbf)
at 24.1 mm (0.949 in.)

If the installed tension is not as specified, replace the inner compression spring.

16. INSPECT VALVE

(a) Using a vernier calipers, check the valve overall length.
Standard overall length:
Intake 88.65 mm (3.4902 in.)
Exhaust 88.69 mm (3.4917 in.)
Minimum overall length:
Intake 88.35 mm (3.4784 in.)
Exhaust 88.39 mm (3.4799 in.)

If the overall length is less than minimum, replace the valve.

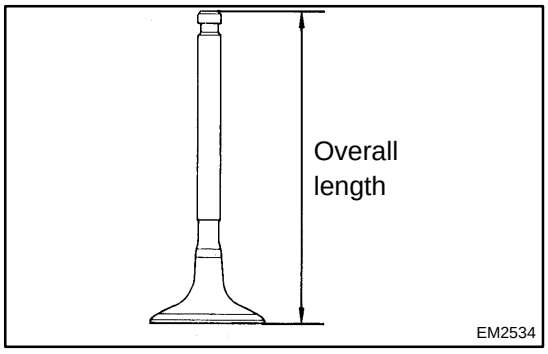

EM2534

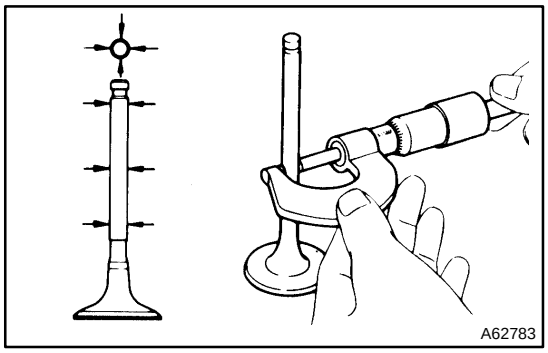
A62783

(b) Using a micrometer, measure the diameter of the valve stem.
Valve stem diameter:
Intake 5.470 – 5.485 mm (0.2154 – 0.2159 in.)
Exhaust 5.465 – 5.480 mm (0.2152 – 0.2158 in.)

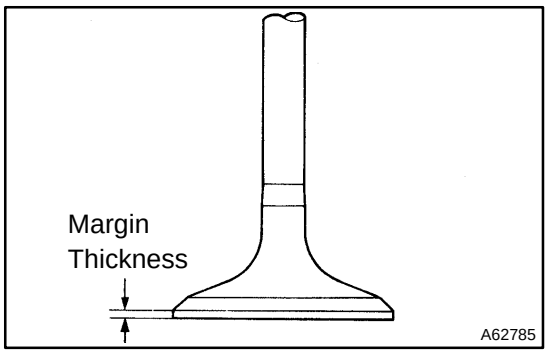

A62785

(c) Using a vernier calipers, check the valve head margin thickness.
Standard margin thickness: 1.0 mm (0.039 in.)
Minimum margin thickness: 0.7 mm (0.028 in.)

If the overall length is less than minimum, replace the valve.

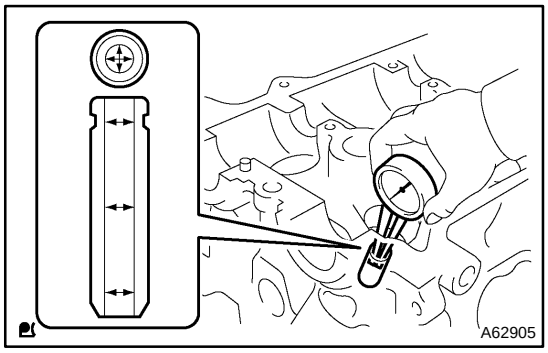
A62905

17. INSPECT VALVE GUIDE BUSHING OIL CLEARANCE

(a) Using a caliper gauge, measure the inside diameter of the valve guide bush.
Busing inside diameter:
5.510 – 5.530 mm (0.2169 – 0.2177 in.)

(b) Subtract the valve stem diameter measurement from the guide bushing inside diameter measurement.
Standard oil clearance:
Intake 0.025 – 0.060 mm (0.0010 – 0.0024 in.)
Exhaust 0.030 – 0.065 mm (0.0012 – 0.0026 in.)
Maximum oil clearance:
Intake 0.08 mm (0.0032 in.)
Exhaust 0.10 mm (0.0039 in.)

If the oil clearance is greater than maximum, replace the valve and valve guide bushing.

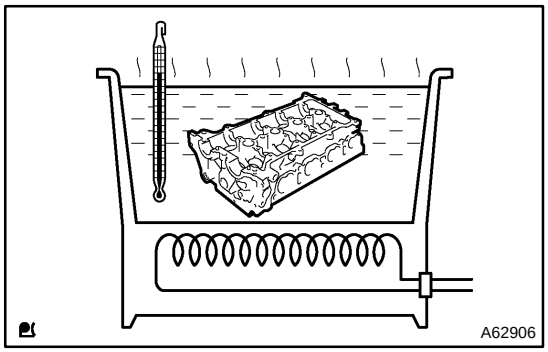

18. REPLACE VALVE GUIDE BUSHING

(a) Heat the cylinder head to 80 – 100°C (176 – 212°F).

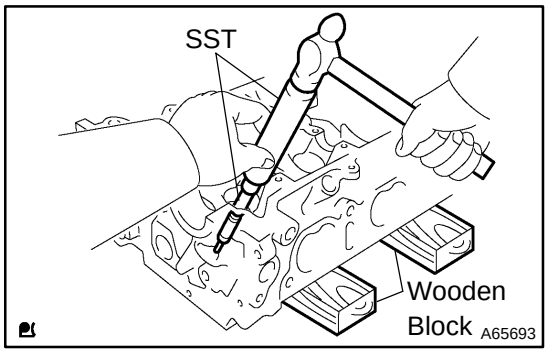

(b) Place the cylinder head on the wooden blocks.

(c) Using SST, tap out the valve guide bushing.
SST 09201–10000, 09201–01055, 09950–70010 (09951–07100)

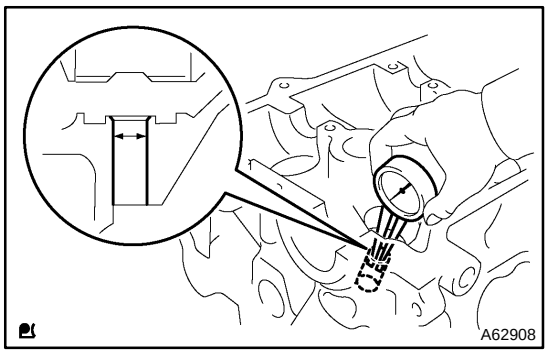

(d) Using a caliper gauge, measure the bushing bore diameter of the cylinder head.
Diameter: 10.285 – 10.306 mm (0.4049 – 0.4058 in.)

If the bushing bore diameter of the cylinder head is greater than 10.306 mm (0.4058 in.), machine the bushing bore to the dimension of 10.335 – 10.356 mm (0.4069 – 0.4077 in.) to install a over size valve guide bushing.

HINT:

Valve guide bushing size	Bushing bore diameter mm (in.)
STD	10.285 – 10.306 (0.4049 – 0.4058)
O/S 0.05	10.335 – 10.356 (0.4069 – 0.4077)

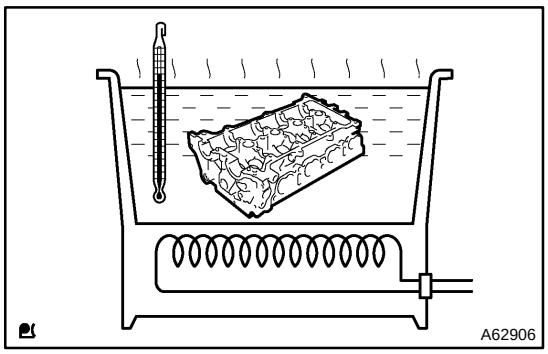

(e) Heat the cylinder head to 80 – 100°C (176 – 212°F).

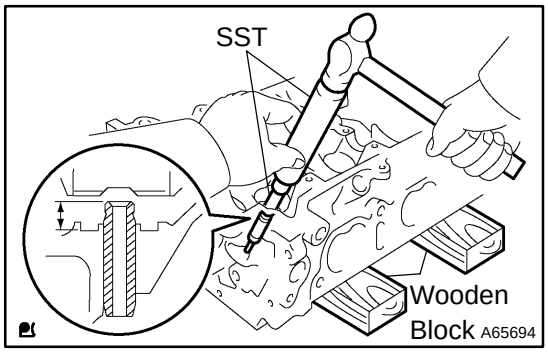

(f) Place the cylinder head on wooden blocks.

(g) Using SST, tap in a new valve guide bushing to the specified protrusion height.

SST 09201–10000, 09201–01055, 09950–70010 (09951–07100)

Protrusion height: 8.7 – 9.1 mm (0.343 – 0.358 in.)

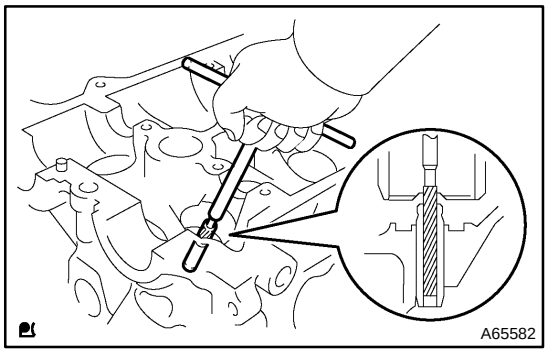

(h) Using a sharp 5.5 mm reamer, ream the valve guide bushing to obtain the standard specified clearance.

Standard oil clearance:
Intake 0.025 – 0.060 mm (0.0010 – 0.0024 in.)
Exhaust 0.030 – 0.065 mm (0.0012 – 0.0026 in.)

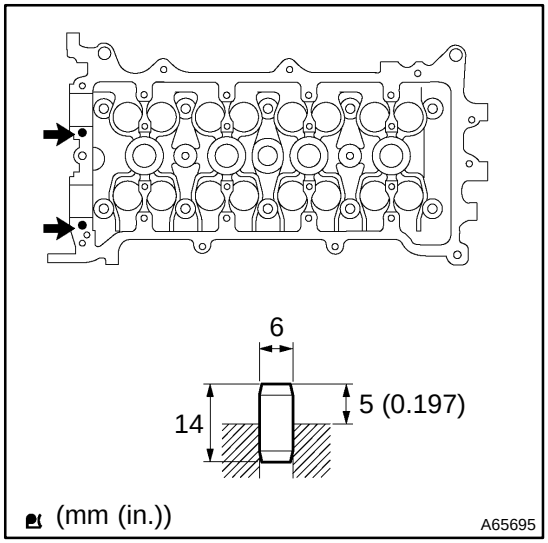

19. INSTALL STRAIGHT PIN

(a) Using a plastic hammer, install the new 2 straight pins.

Standard protrusion: 5 mm (0.197 in.)

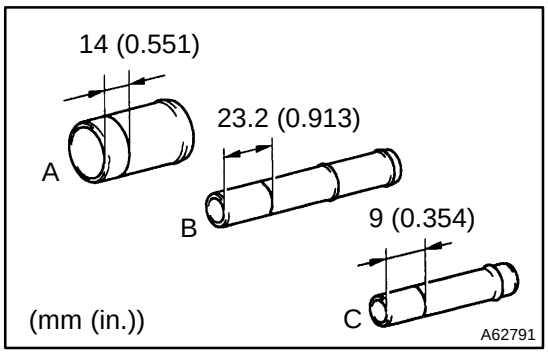

20. INSTALL UNION

(a) Mark the standard position away from the edge, onto the water hose union as shown in the illustration.

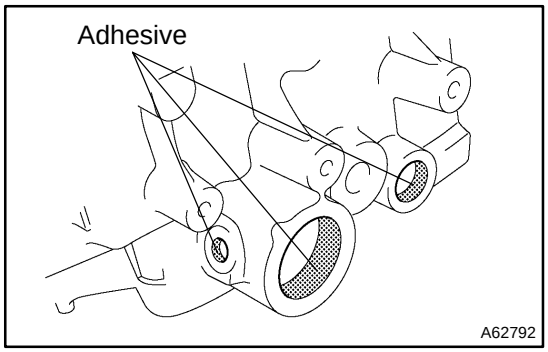

(b) Apply adhesive to the water hose union hole of the cylinder head.

Adhesive:
Part No. 08833–00070, THREE BOND 1324 or equivalent.

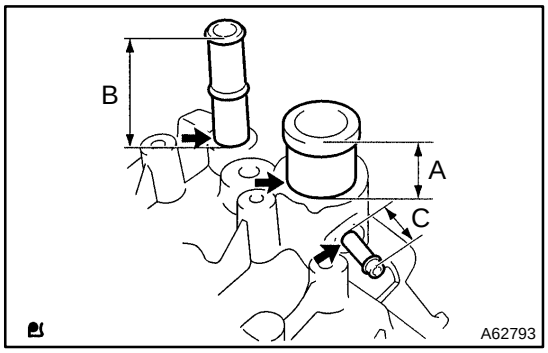

(c) Using a press, press in a new water hose union until the standard marks come to the level of the cylinder head surface.

Standard protrusion:
A 29 mm (1.142 in.)
B 66.5 mm (2.618 in.)
C 24 mm (0.945 in.)

NOTICE:

- **Install the water hose union within 3 minutes after applying adhesive.**
- **Do not put into coolant within an hour after installing.**

21. INSTALL STUD BOLT

(a) Using torx socket wrench E5 and E7, install the 11 stud bolts,

Torque:
Stud bolt A, D and E 9.5 N·m (97 kgf·cm, 84 in.·lbf)
Stud bolt B and C 5.0 N·m (51 kgf·cm, 44 in.·lbf)

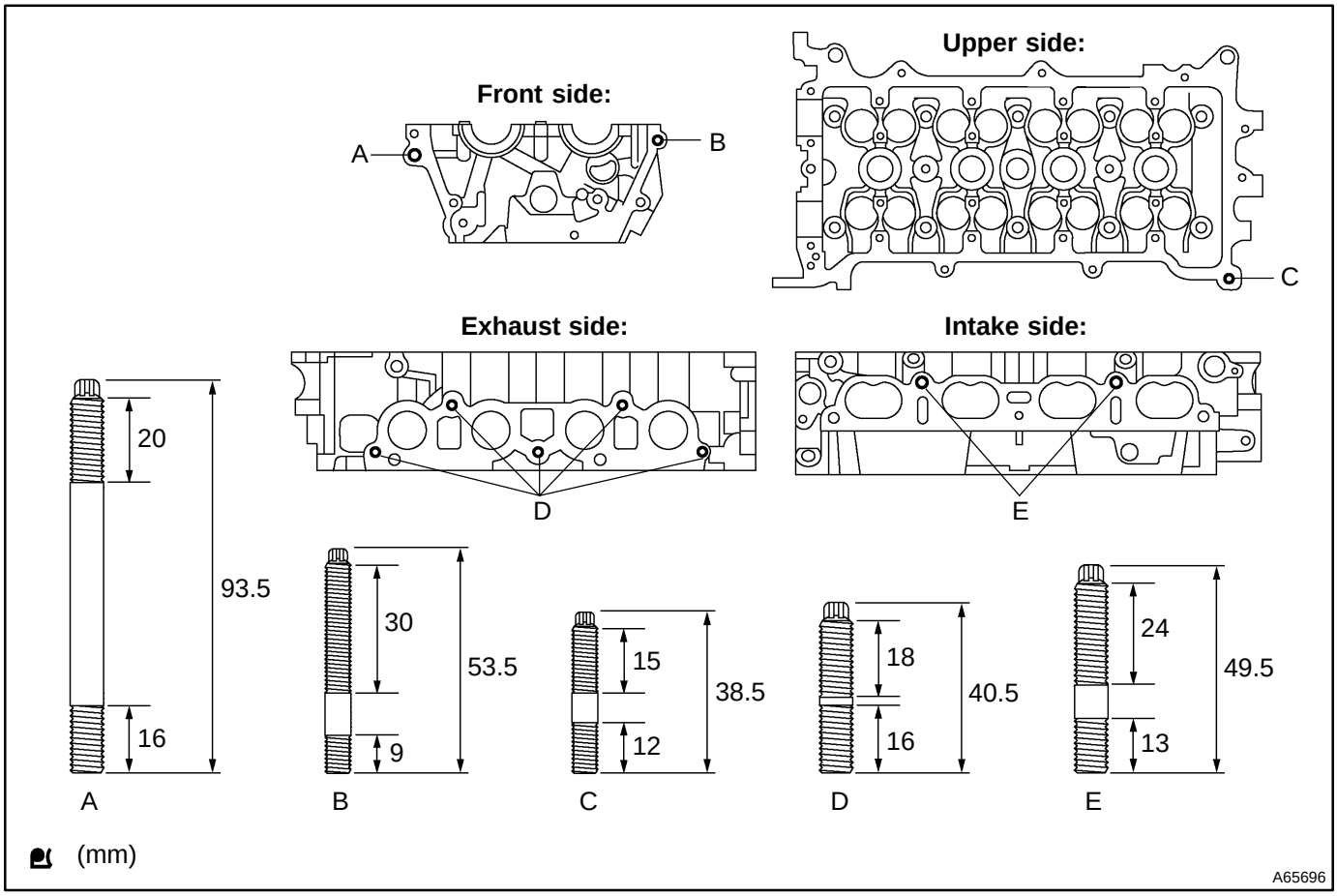

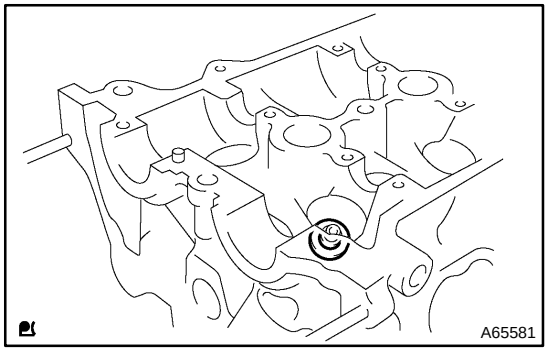

22. INSTALL VALVE SPRING SEAT

(a) Install the valve spring seats to the cylinder head.

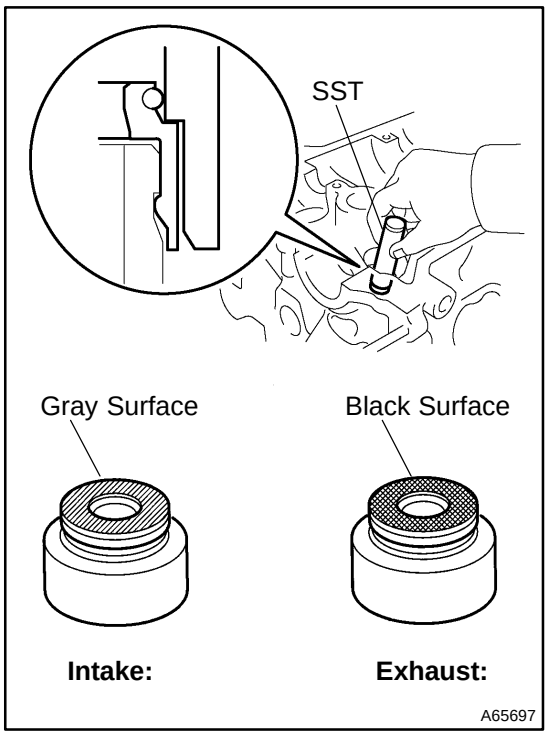

23. INSTALL VALVE STEM OIL O SEAL OR RING

(a) Apply a light coat of engine oil to a new valve stem oil seals.

NOTICE:

Be very careful to assemble the oil seal for intake and exhaust. Assembling the wrong one may cause a failure.

HINT:

The intake valve stem oil seal is gray and exhaust valve stem oil seal is black.

(b) Using SST, push in the valve stem oil seals.

SST 09201–41020

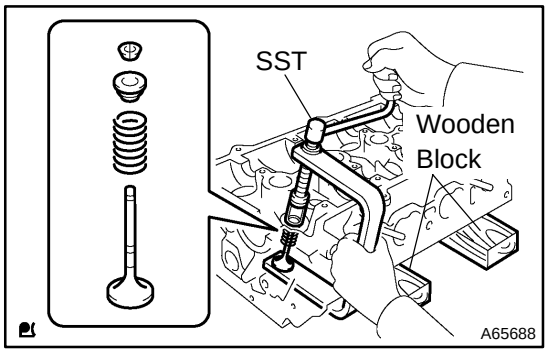

24. INSTALL VALVE

(a) Place the cylinder head on wooden blocks.

(b) Install the valves, inner compression springs and valve spring retainers to the cylinder head.

(c) Using SST, compress the inner compression spring, and place the 2 valve spring retainer locks around the valve stem.

SST 09202–70020 (09202–00010, 09202–01010, 09202–01020)

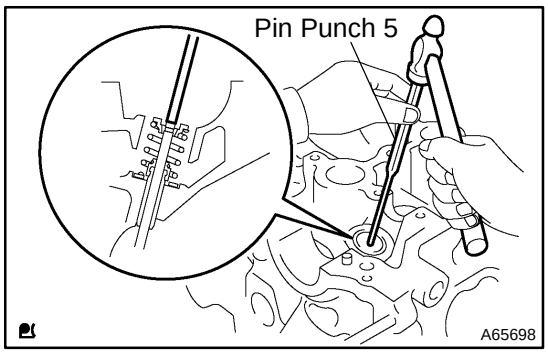

(d) Using a pin punch 5, lightly tap the valve stem tip to ensure a proper fit.

NOTICE:

Be careful not to damage the valve stem tip.

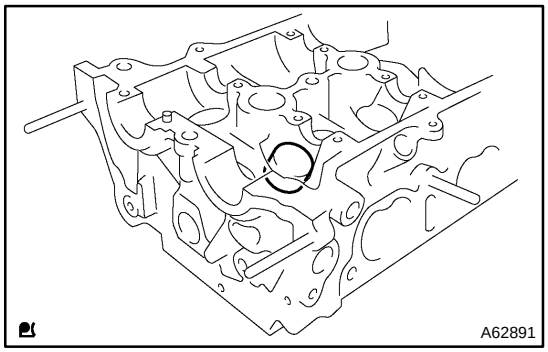

25. INSTALL VALVE LIFTER

(a) Apply a light coat of engine oil to the valve lifters.

(b) Install the valve lifters to the cylinder head.

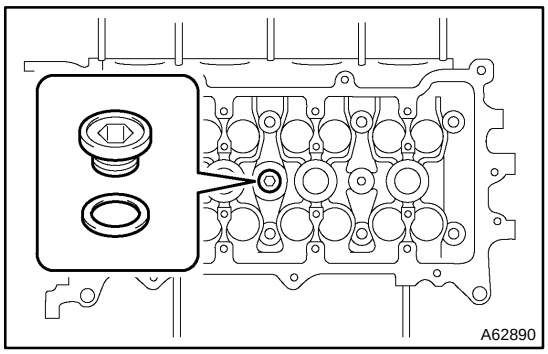

26. INSTALL W/HEAD TAPER SCREW PLUG NO.2

(a) Using a socket hexagon wrench 10, install the taper screw plug with a new gasket.

Torque: 44 N·m (449 kgf·cm, 33 ft·lbf)

CYLINDER BLOCK

COMPONENTS

140Q8–03

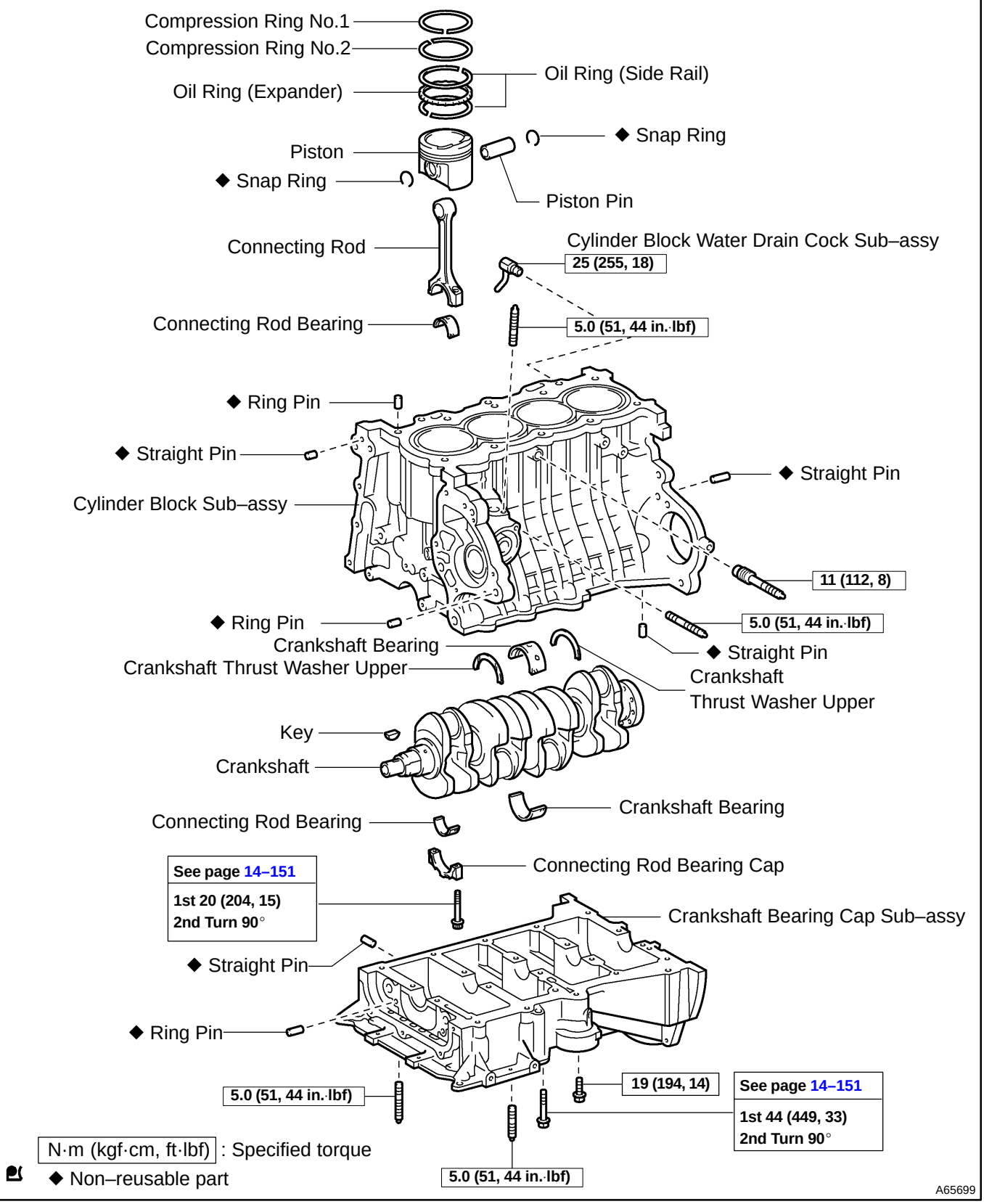

OVERHAUL

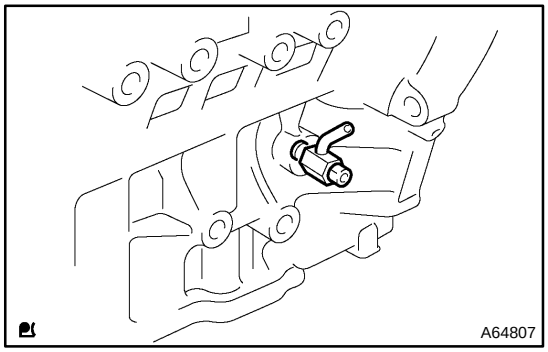

1. REMOVE CYLINDER BLOCK WATER DRAIN COCK SUB–ASSY

(a) Remove the cylinder block water drain cock from the cylinder block.

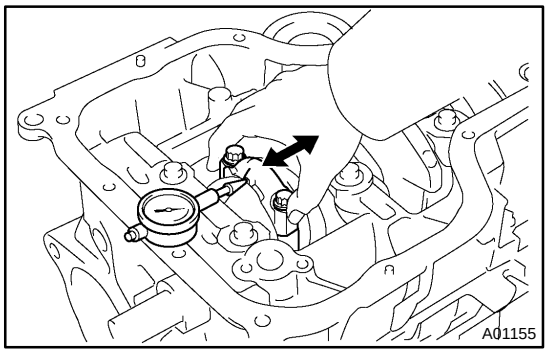

2. INSPECT CONNECTING ROD THRUST CLEARANCE

(a) Using a dial indicator, measure the thrust clearance while moving the connecting rod back and forth.

Standard thrust clearance:
0.160 – 0.342 mm (0.063 – 0.0135 in.)
Maximum thrust clearance:
0.342 mm (0.0135 in.)

If the thrust clearance is greater than maximum, replace the connecting rod.

If necessary, replace the crankshaft.

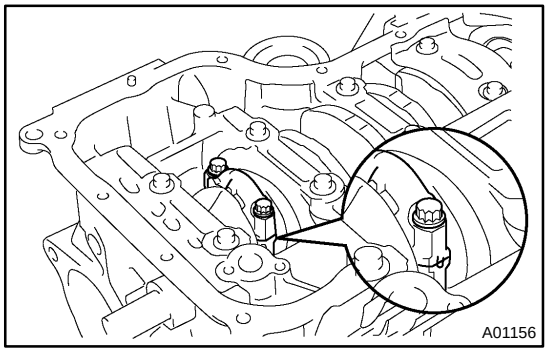

3. INSPECT CONNECTING ROD OIL CLEARANCE

NOTICE:

Do not turn the crankshaft.

(a) Using marking paint, write the matched cylinder number on each connecting rod and cap.

HINT:

The match marks on the connecting rods and caps are for ensuring correct reassembly.

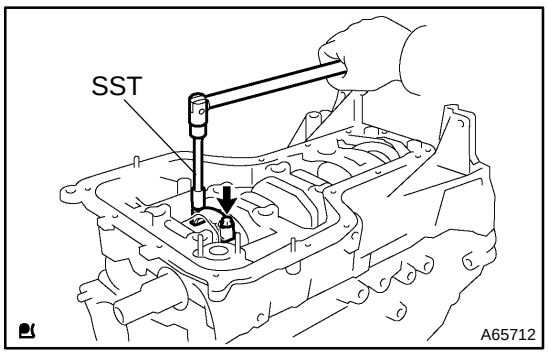

(b) Using SST, remove the 2 bolts and connecting rod cap.
SST 09205–16010

(c) Clean the crank pin and bearing.

(d) Check the crank pin and bearing for pitting and scratches.

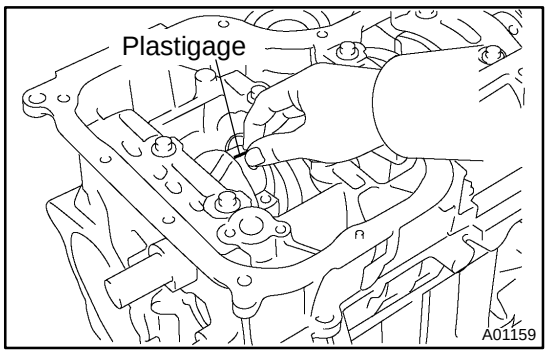

(e) Lay a strip of Plastigage across the crank pin.

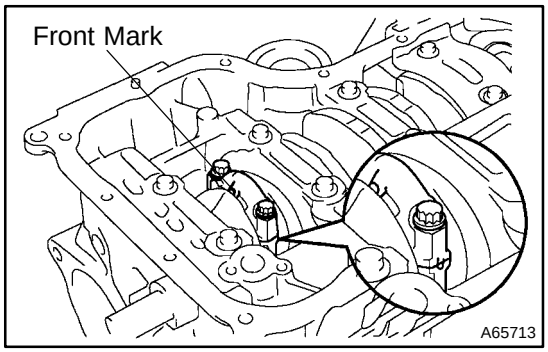

(f) Check that the front mark of the connecting rod cap is facing in the correct direction.

(g) Apply a light coat of engine oil on the threads and under the heads of the connecting rod cap bolts.

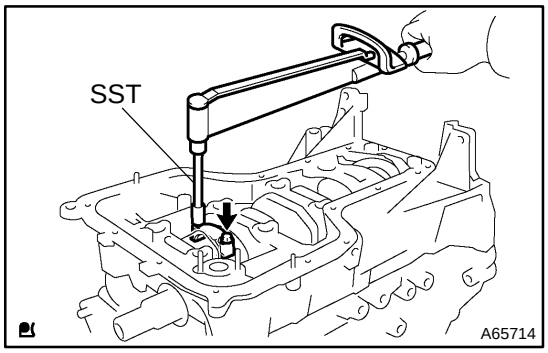

(h) Using SST, tighten the bolts in several passes by the specified torque.
SST 09205–16010
Torque: 20 N·m (204 kgf·cm, 15 ft·lbf)

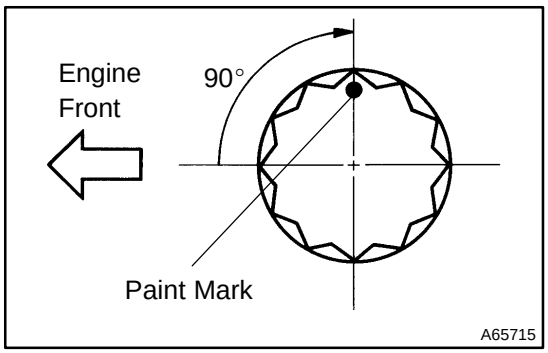

(i) Mark the front of the connecting cap bolts with paint.

(j) Retighten the cap bolts by 90° as shown in the illustration.

(k) Check that the crankshaft turns smoothly.

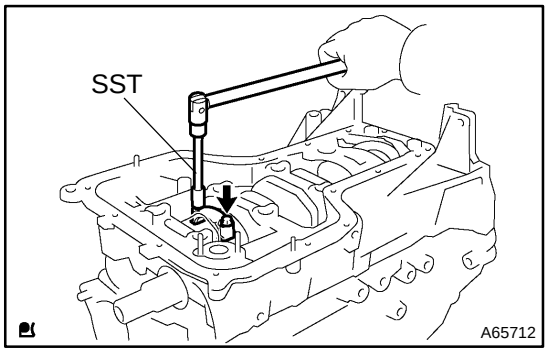

(l) Remove the 2 bolts and connecting rod cap.

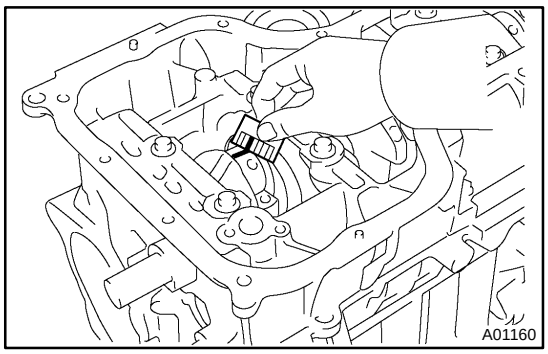

(m) Measure the Plastigage at its widest point.
Standard oil clearance:
0.028 – 0.060 mm (0.0011 – 0.0024 in.)
Maximum oil clearance: 0.080 mm (0.0032 in.)

NOTICE:

Remove the Plastigage completely after the measurement.

If the oil clearance is greater than maximum, replace the connecting rod bearing.

If necessary, grind or replace the crankshaft.

HINT:

If replacing a bearing, select a new one having the same number as marked on the connecting rod. There are 3 sizes of standard bearings, marked ”1”, ”2” and ”3” accordingly.

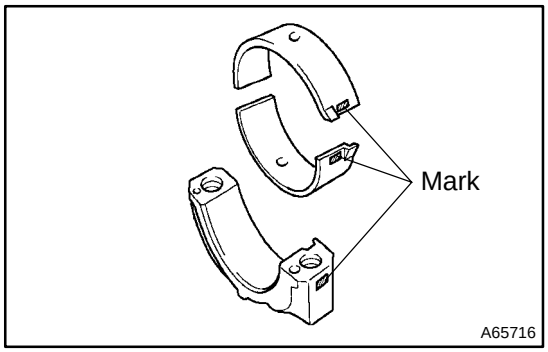

Item	Mark	mm (in.)
Connecting rod large end bore diameter	1 2 3	47.000 – 47.008 (1.85039 – 1.85071) 47.009 – 47.016 (1.85075 – 1.85102) 47.017 – 47.024 (1.85106 – 1.85134)
Connecting rod bearing thickness	1 2 3	1.486 – 1.490 (0.05850 – 0.05866) 1.491 – 1.494 (0.05870 – 0.05882) 1.495 – 1.498 (0.05886 – 0.05898)
Crankshaft pin outer diameter	–	43.992 – 44.000 (1.73197 – 1.73228)

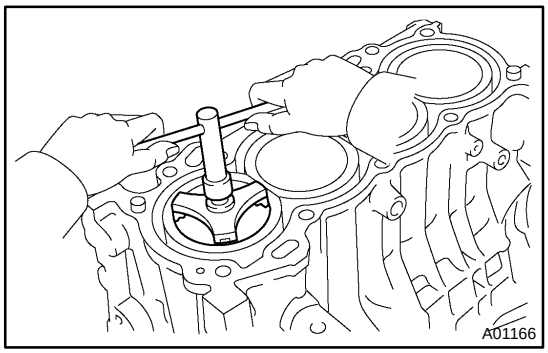

4. REMOVE CONNECTING ROD SUB–ASSY

(a) Using a ride reamer, remove all the carbon from the top of the cylinder.

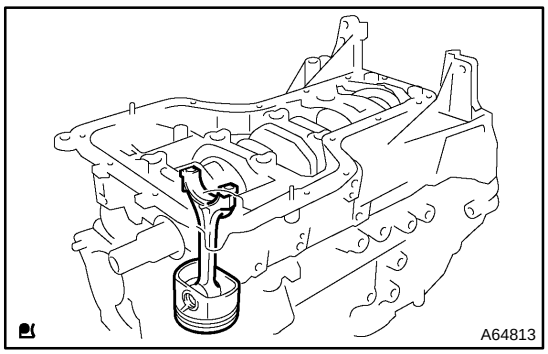

(b) Push the piston, connecting rod assembly and upper bearing through the top of the cylinder block.

HINT:

- Keep the bearing, connecting rod and cap together.
- Arrange the piston and connecting rod assemblies in the correct order.

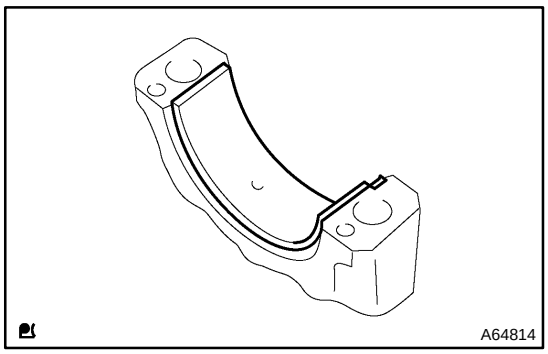

5. REMOVE CONNECTING ROD BEARING

(a) Remove the connecting rod bearing from the connecting rod cap.

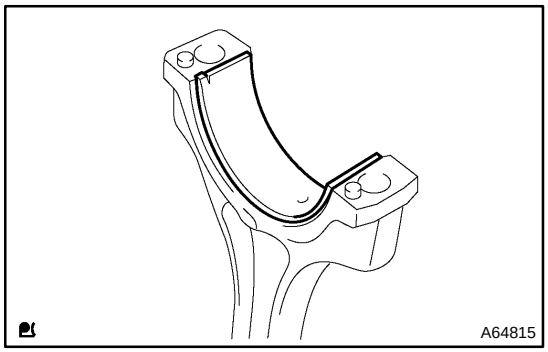

(b) Remove the connecting rod bearing from the connecting rod.

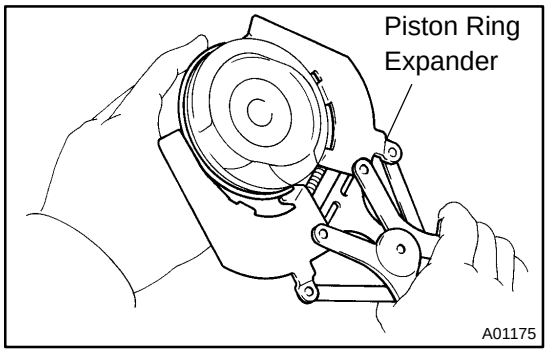

6. REMOVE PISTON RING SET

(a) Using a piston ring expander, remove the 2 compression rings.

(b) Remove the 2 side rails and oil ring by hand.

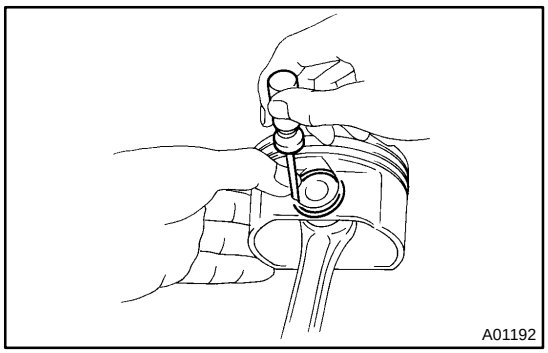

7. REMOVE W/PIN PISTON SUB–ASSY

(a) Using a small screwdriver, pry out the 2 snap rings.

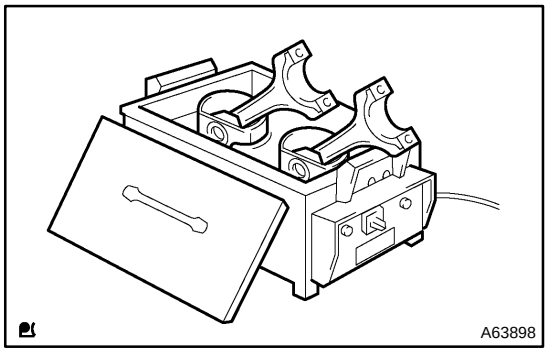

(b) Heat the piston to 80 – 90°C (176 – 194°F).

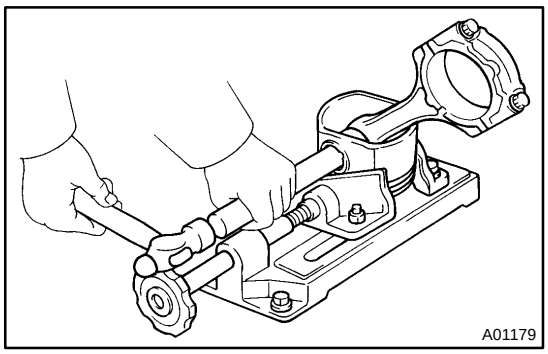

(c) Using a plastic hammer and brass bar, lightly tap out the piston pin and remove the connecting rod.

HINT:

- The piston and pin are a matched set.
- Arrange the piston, pins, ring, connecting rod and bearings in the correct order.

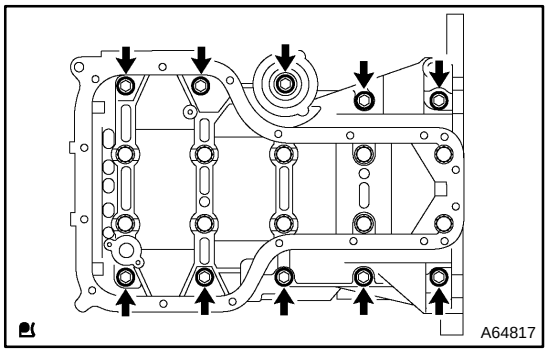

8. REMOVE CRANKSHAFT

(a) Remove the 10 bolts.

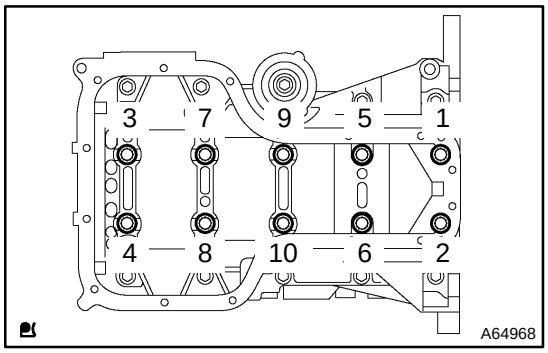

(b) Uniformly loosen the 10 bearing cap bolts, in several passes, in the sequence shown in the illustration.

SST 09011–38121

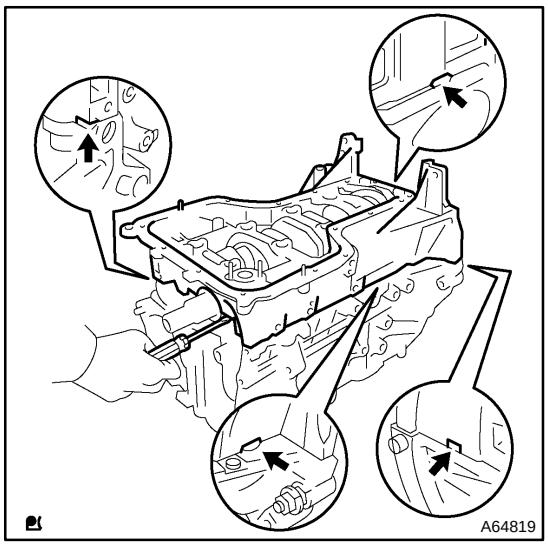

(c) Using a screwdriver, remove the bearing cap by prying the indicated portions between the cylinder block and bearing cap.

NOTICE:

Be careful not to damage the contact surfaces of the cylinder block and bearing cap.

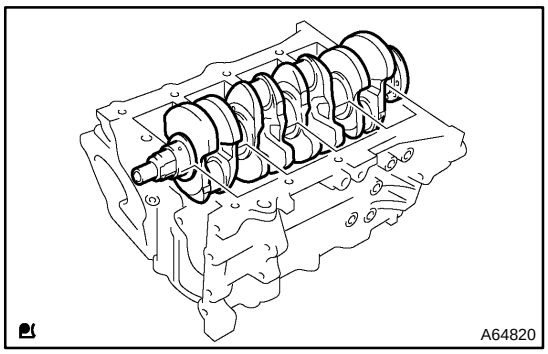

(d) Remove the crankshaft from the cylinder block.

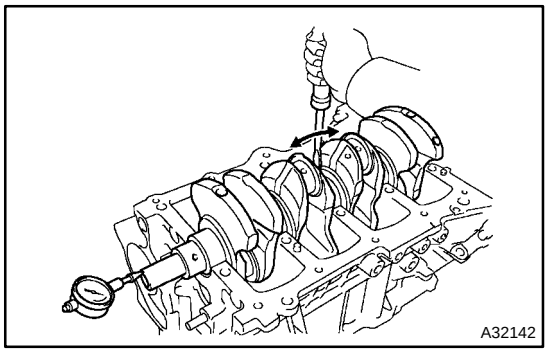

9. INSPECT CRANKSHAFT THRUST CLEARANCE

(a) Using a dial indicator, measure the thrust clearance while prying the crankshaft back and forth with a screwdriver.

Standard thrust clearance:
0.04 – 0.24 mm (0.0016 – 0.0095 in.)
Maximum thrust clearance: 0.30 mm (0.0118 in.)

If the thrust clearance is greater than maximum, measure the thrust washer thickness.

If the thickness is not specified, replace the thrust washer.

HINT:

Thrust washer thickness: 2.430 – 2.480 mm (0.0957 – 0.0976 in.).

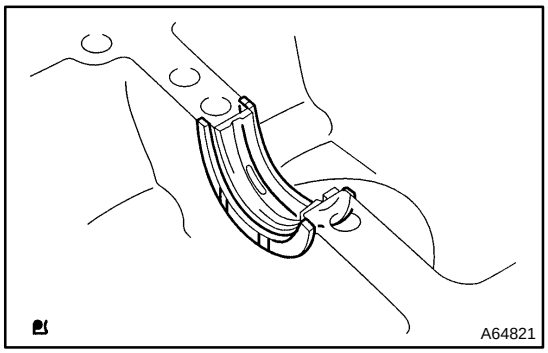

10. REMOVE CRANKSHAFT THRUST WASHER UPPER

(a) Remove the 2 crankshaft thrust washers from the cylinder block.

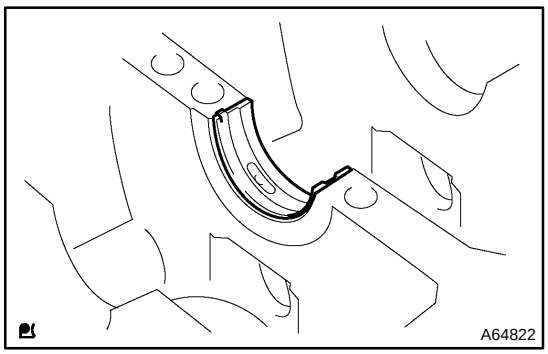

11. REMOVE CRANKSHAFT BEARING

(a) Remove the 5 crankshaft bearings from the cylinder block.

NOTICE:

Arrange the main bearings and thrust washers in the correct order.

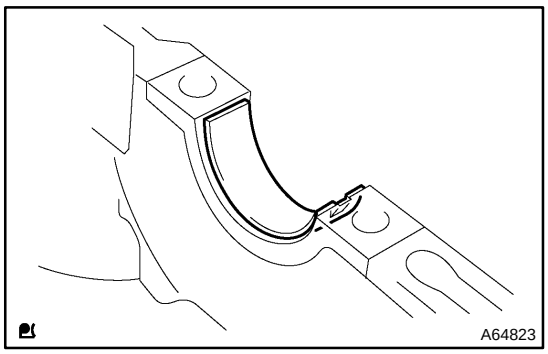

(b) Remove the 5 crankshaft bearings from the bearing cap.

NOTICE:

Arrange the main bearings and thrust washers in the correct order.

12. REMOVE STUD BOLT

(a) Using torx socket wrench E5 and E7, remove the 9 stud bolts.

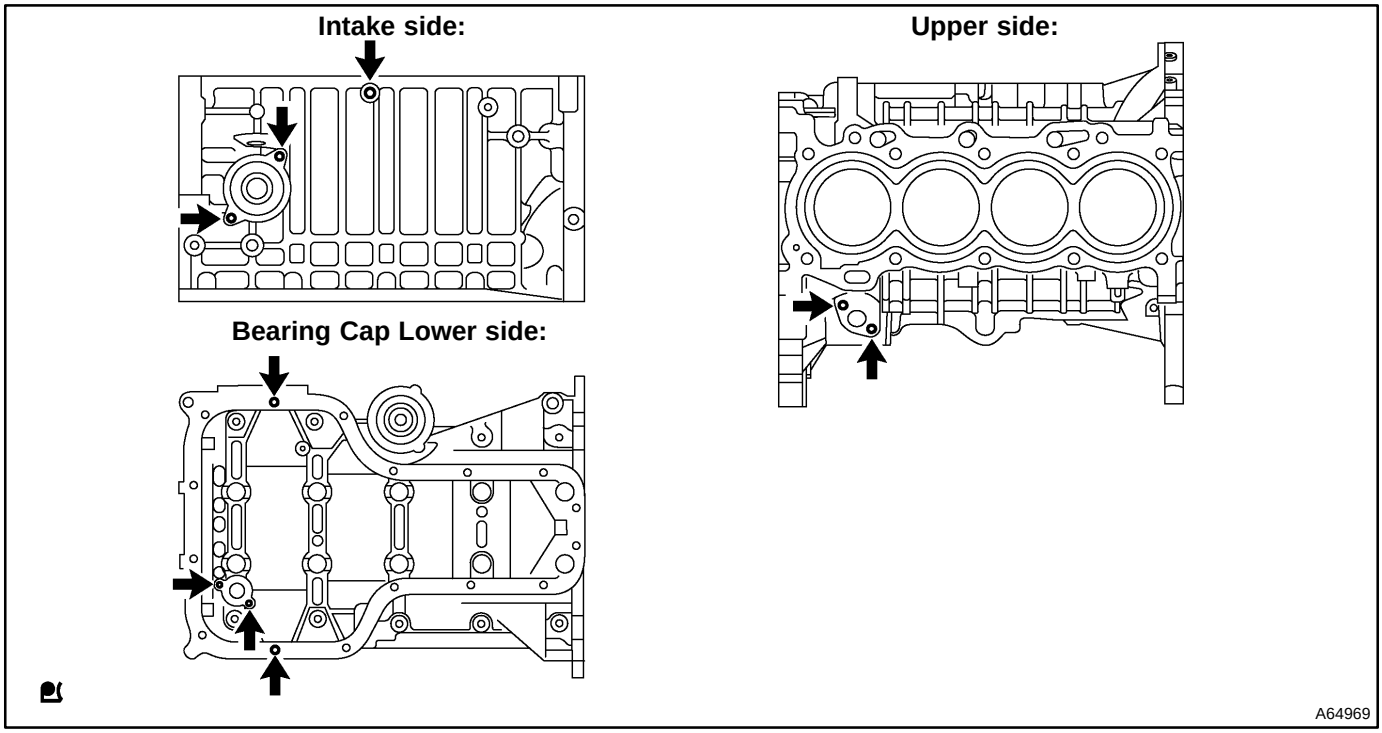

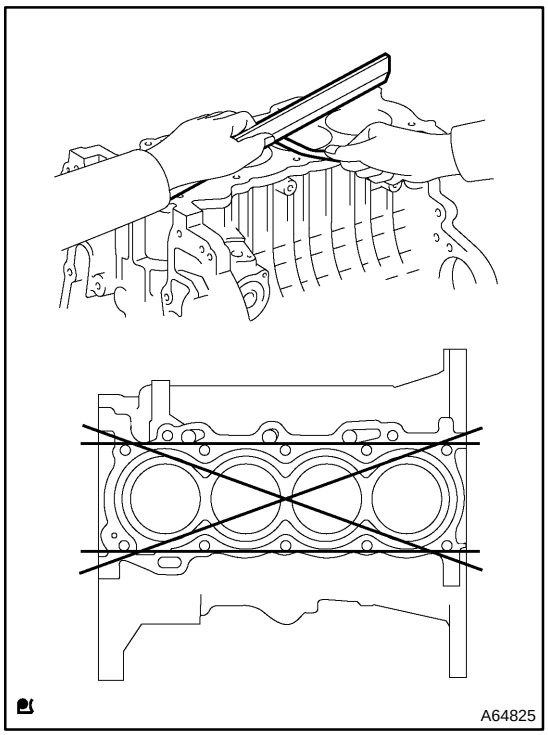

13. INSPECT CYLINDER BLOCK FOR FLATNESS

(a) Using a precision straight edge and feeler gauge, measure the surface contacting the cylinder head gasket for warpage.

Maximum warpage: 0.05 mm (0.0020 in.)

If the warpage is greater than maximum, replace the cylinder block.

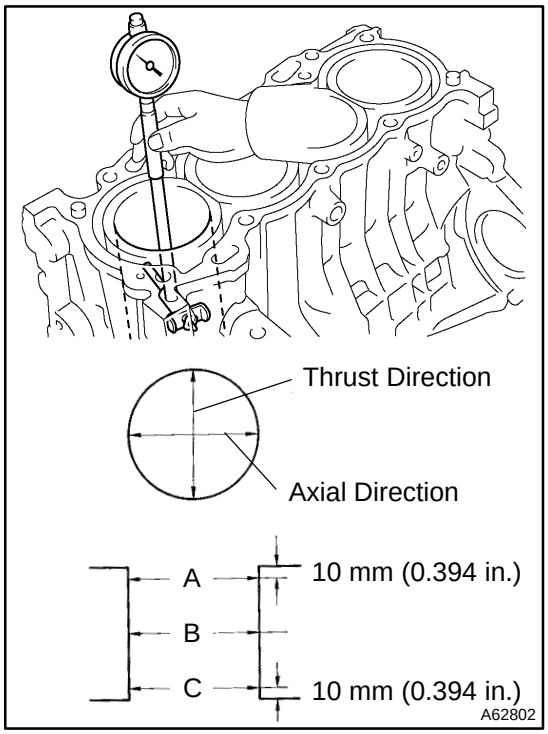

14. INSPECT CYLINDER BORE

(a) Using a cylinder gauge, measure the cylinder bore diameter at positions A, B and C in the thrust and axial directions.

Standard diameter:
79.000 – 79.013 mm (3.1102 – 3.1108 in.)
Maximum diameter:
79.013 mm (3.1108 in.)

If the diameter is greater than maximum, replace th cylinder block.

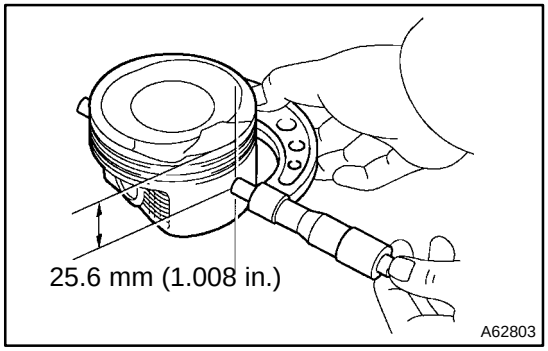

15. INSPECT W/PIN PISTON SUB–ASSY

(a) Using a micrometer, measure the piston diameter at a right angle to the piston pin hole, and at the piston of 25.6 mm (1.008 in.) from the piston head.

Piston diameter:
78.872 – 78.972 mm (3.1052 – 3.1091 in.)

16. INSPECT PISTON OIL CLEARANCE

(a) Subtract the piston diameter measurement from the cylinder bore diameter measurement.
Standard oil clearance: 0.065 – 0.088 mm (0.0026 – 0.0035 in.)
Maximum oil clearance: 0.088 mm (0.0035 in.)

If the oil clearance is greater than maximum, replace all the pistons.
If necessary, replace the cylinder block.

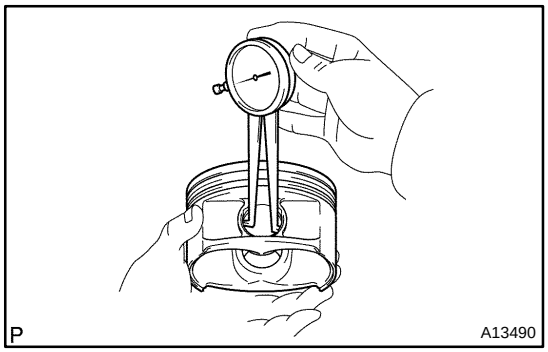

17. INSPECT PISTON PIN OIL CLEARANCE

(a) Using a caliper gauge, measure the piston pin bore diameter.
Piston pin bore diameter:
20.006 – 20.015 mm (0.78764 – 0.78799 in.)

Mark	mm (in.)
A	20.006 – 20.009 (0.78764 – 0.78776)
B	20.010 – 20.012 (0.78780 – 0.78787)
C	20.013 – 20.015 (0.78791 – 0.78799)

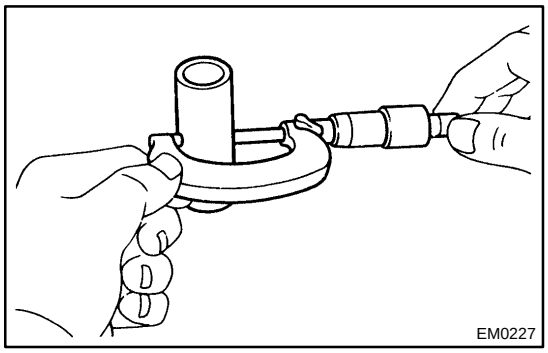

(b) Using a micrometer, measure the piston pin outer diameter.
Piston pin outer diameter:
20.004 – 20.013 mm (0.78756 – 0.78791 in.)

Mark	mm (in.)
A	20.004 – 20.007 (0.78756 – 0.78768)
B	20.008 – 20.010 (0.78772 – 0.78780)
C	20.011 – 20.013 (0.78783 – 0.78791)

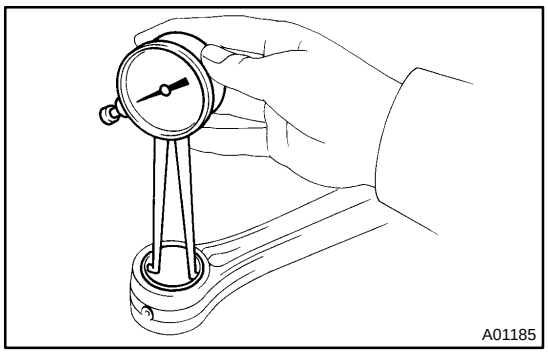

(c) Using a caliper gauge, measure the connecting rod small end bore diameter.
Connecting rod small end bore diameter:
20.012 – 20.021 mm (0.78787 – 0.78823 in.)

Mark	mm (in.)
A	20.012 – 20.015 (0.78787 – 0.78799)
B	20.016 – 20.018 (0.78803 – 0.78811)
C	20.019 – 20.021 (0.78815 – 0.78823)

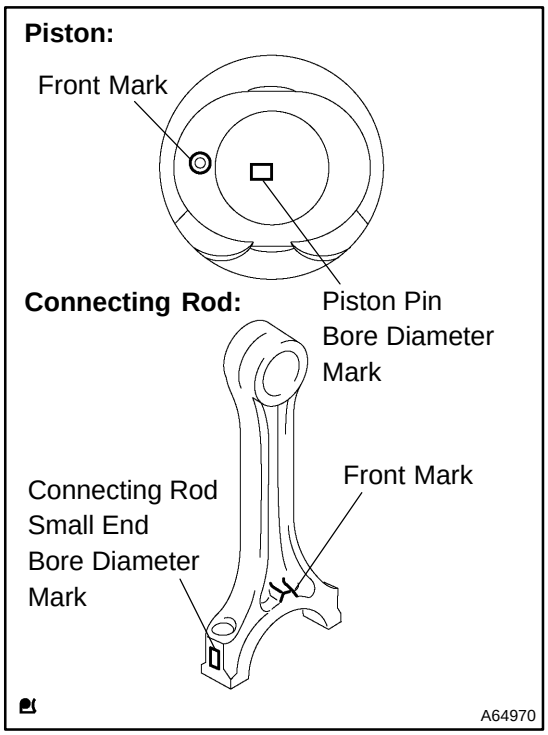

(d) Subtract the piston pin outer diameter measurement from the piston pin bore diameter measurement.
Standard oil clearance:
0.002 – 0.011 mm (0.0001 – 0.0004 in.)
Maximum oil clearance: 0.011 mm (0.0004 in.)

If the oil clearance is greater than maximum, replace the connecting rod.

If necessary, replace the w/pin piston.

(e) Subtract the piston pin outer diameter measurement from the connecting rod small end bore diameter measurement.
Standard oil clearance:
–0.001 – 0.017 mm (–0.0004 – 0.0007 in.)
Maximum oil clearance: 0.017 mm (0.0007 in.)

If the oil clearance is greater than maximum, replace the connecting rod.

If necessary, replace the connecting rod and w/pin piston.

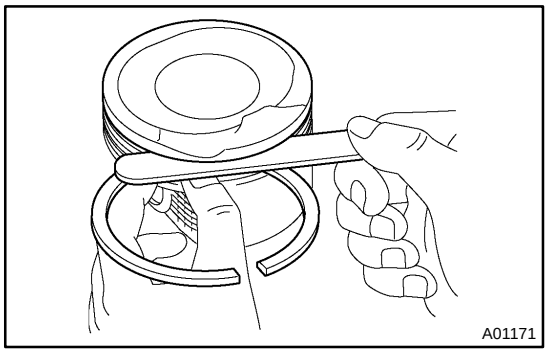

18. INSPECT RING GROOVE CLEARANCE

(a) Using a feeler gauge, measure the clearance between the new piston ring and the wall of the ring groove.
Ring groove clearance:
No. 1 0.020 – 0.070 mm (0.0008 – 0.0028 in.)
No. 2 0.030 – 0.070 mm (0.0012 – 0.0028 in.)
Oil 0.03 – 0.11 mm (0.0012 – 0.0043 in.)

If the groove clearance is not as specified, replace the piston ring.

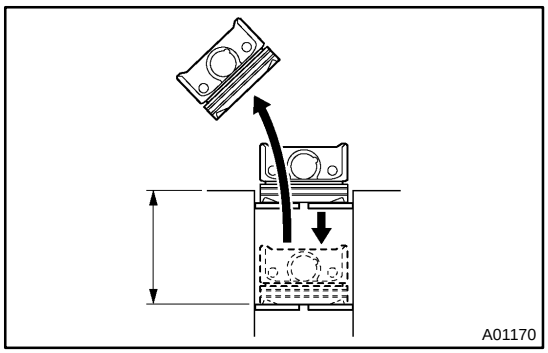

19. INSPECT PISTON RING END GAP

(a) Using a piston, push the piston ring a little beyond the bottom of the ring travel, that means 110 mm (4.33 in.) from the top of the cylinder block.

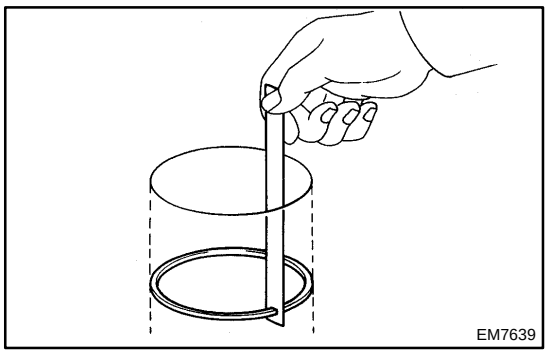

(b) Using a feeler gauge, measure the end gap.

Standard end gap:
No. 1 0.25 – 0.35 mm (0.0098 – 0.0138 in.)
No. 2 0.35 – 0.50 mm (0.0138 – 0.0197 in.)
Oil 0.15 – 0.40 (0.0059 – 0.158 in.)
Maximum end gap:
No. 1 1.05 mm (0.0413 in.)
No. 2 1.20 mm (0.0472 in.)

If the end gap is greater than maximum,replace the piston ring. If the end gap is greater than maximum, even with anew piston ring, replace the cylinder block.

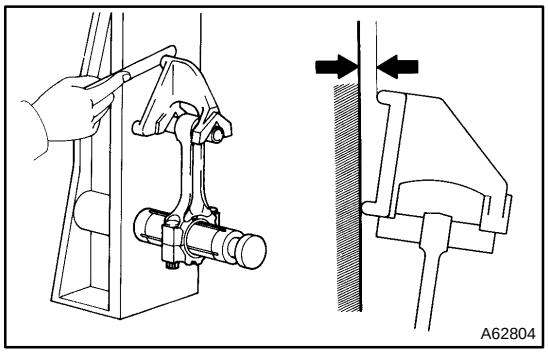

20. INSPECT CONNECTING ROD SUB–ASSY

(a) Using a connecting rod aligner and feeler gauge, check the connecting rod alignment.

(1) Check for out–of–alignment.

Maximum out–of alignment:
0.05 mm (0.0020 in.) per 100 mm (3.94 in.)

If out–of alignment is greater than maximum, replace the connecting rod assembly.

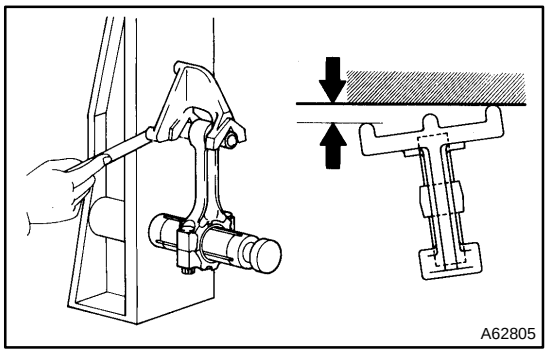

(2) Check for twist.

Maximum twist:
0.05mm (0.0020 in.) per 100 mm (3.94 in.)

If twist is greater than maximum, replace the connecting rod assembly.

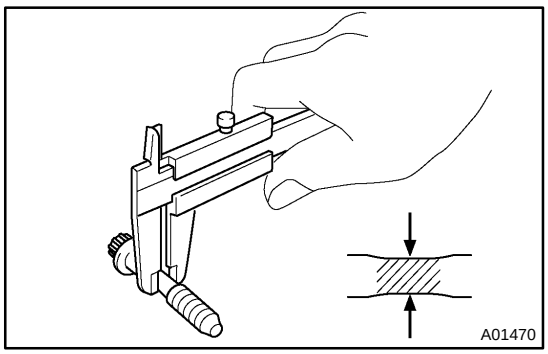

21. INSPECT CONNECTING ROD BOLT

(a) Using a vernier caliper, measure the tension portion diameter of the bolts.

Standard diameter:
6.6 – 6.7 mm (0.260 – 0.264 in.)
Maximum diameter: 6.4 mm (0.252 in.)

If the diameter is less than maximum, replace the connecting rod bolt.

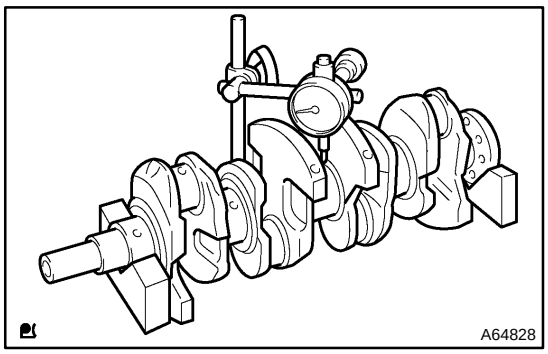

22. INSPECT CRANKSHAFT

(a) Using a dial indicator and V–blocks, measure the circle runout, as shown in the illustration.

Maximum circle runout: 0.03 mm (0.0012 in.)

If the circle runout is greater than maximum, replace the crankshaft.

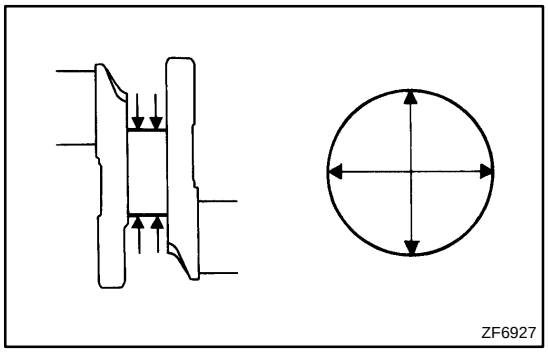

(b) Using a micrometer, measure the diameter of each main journal at the points shown in the illustration.

Diameter: 47.988 – 48.000 mm (1.8893 – 1.8898 in.)

If the diameter is not as specified, check the crankshaft oil clearance.

(c) Check each main journal for taper and out–of–round as shown.

Maximum taper and out–of–round:
0.020 mm (0.0008 in.)

If the taper and out–of–round is greater than maximum, replace the crankshaft.

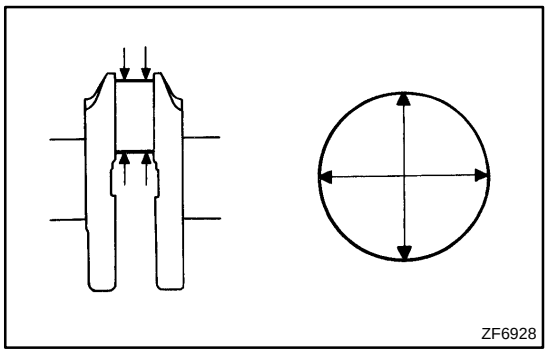

(d) Using a micrometer, measure the diameter of each crank pin at the points shown in the illustration.

Diameter: 43.992 – 44.000 mm (1.7320 – 1.7323 in.)

If the diameter is not as specified, check the connecting rod oil clearance.

(e) Check each crank pin for taper and out–of–round as shown.

Maximum taper and out–of–round:
0.020 mm (0.0008 in.)

If the taper and out–of–round is greater than maximum, replace the crankshaft.

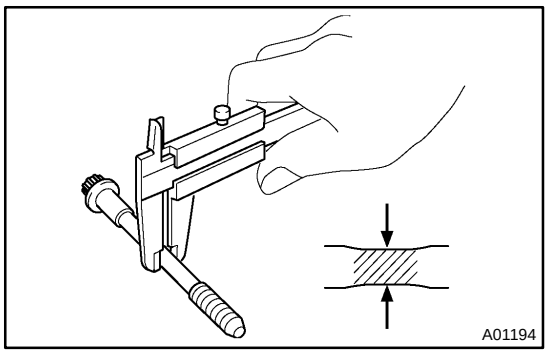

23. INSPECT CRANKSHAFT BEARING CAP SET BOLT

(a) Using vernier caliper, measure the tension portion diameter of the bolts.

Standard diameter: 7.3 – 7.5 mm (0.287 – 0.295 in.)
Minimum diameter: 7.3 mm (0.287 in.)

If the diameter is greater than minimum, replace the crankshaft bearing cap set bolt.

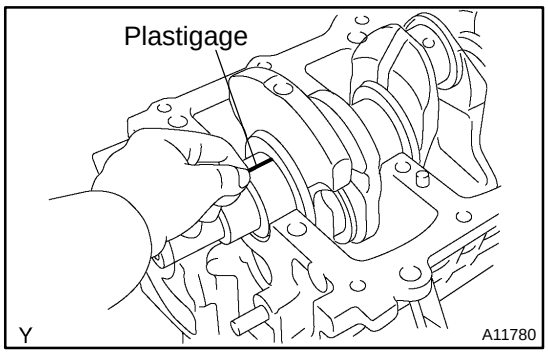

24. INSPECT CRANKSHAFT OIL CLEARANCE

NOTICE:

Do not turn the crankshaft.

(a) Clean each main journal and bearing.

(b) Place the crankshaft on the cylinder block.

(c) Lay a strip of Plastigage across each journal.

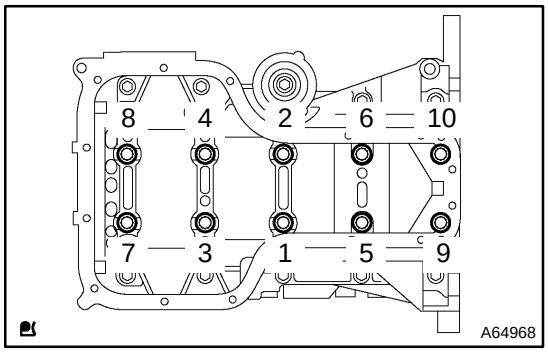

(d) Using SST, tighten the bolts in several passes, in the sequence shown, by the specified torque.
SST 09011–38121
Torque: 44 N·m (449 kgf·cm, 33 ft·lbf)

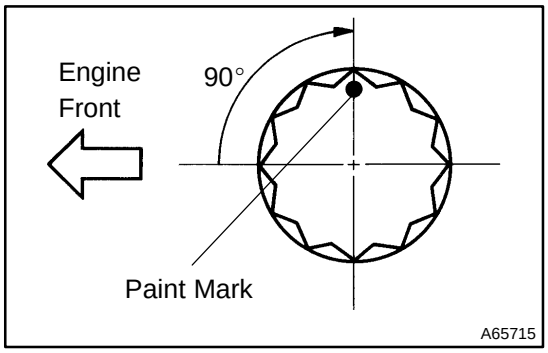

(e) Mark the front of the bearing cap bolts with paint.

(f) Retighten the bearing cap bolts by 90° as shown in the illustration.

(g) Check that the painted mark is now at a 90° angle to the front.

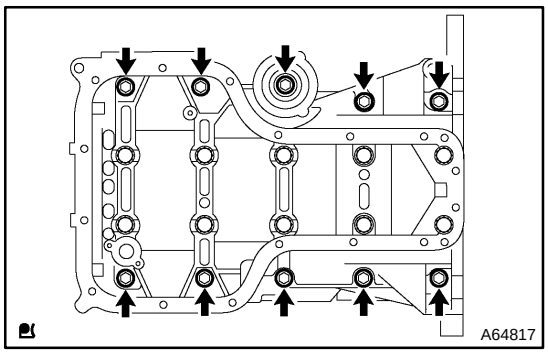

(h) Tighten 10 other bolts for the bearing cap.
Torque: 19 N·m (194 kgf·cm, 14 ft·lbf)

(i) Remove the 10 bolts.

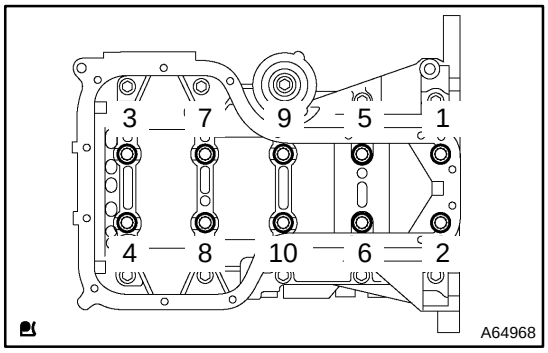

(j) Uniformly loosen the 10 bearing cap bolts, in several passes, in the sequence shown in the illustration.
SST 09011–38121

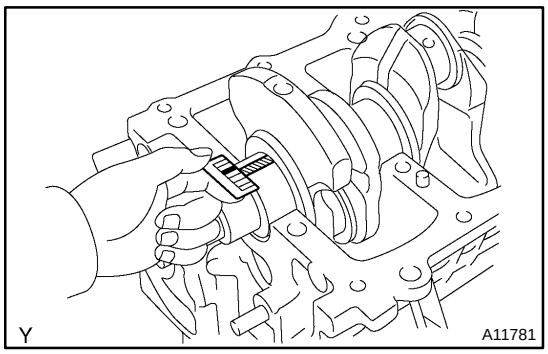

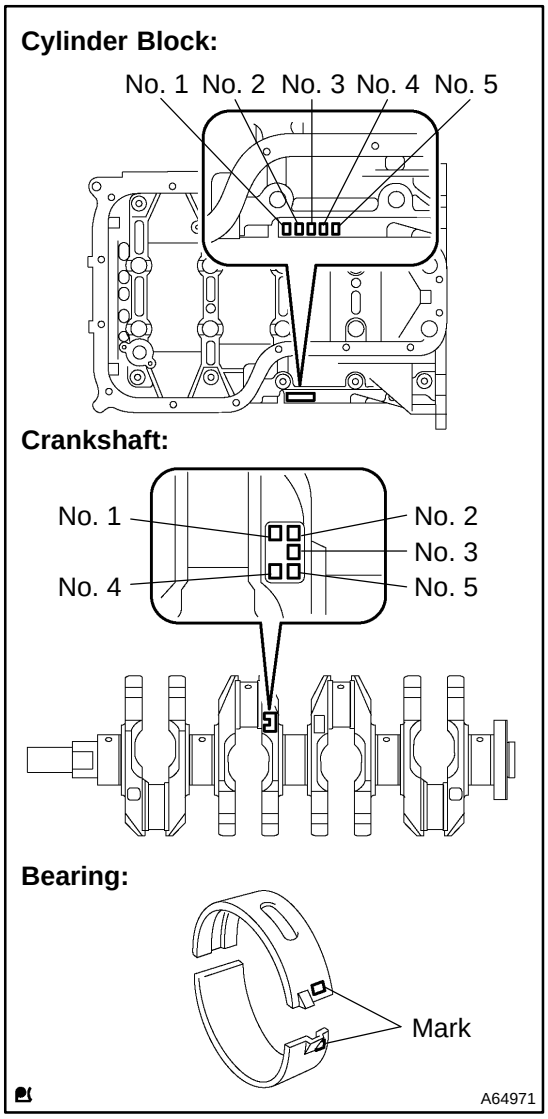

(k) Measure the plastigage at its widest point.

Standard oil clearance:
0.015 – 0.032 mm (0.0006 – 0.0013 in.)
Minimum oil clearance: 0.05 mm (0.0020 in.)

NOTICE:

Completely remove the plastigage

If the oil clearance is greater than minimum, replace the crankshaft bearing.

If necessary, replace the crankshaft.

HINT:

If replacing a bearing, select a new one having the same number. If the number of the bearing cannot be determined, calculate the correct use bearing number by adding together the numbers imprinted on the cylinder block and crankshaft, then select a new bearing having the calculated number. There are 4 sizes of standard bearings, marked ”1”, ”2”, ”3” and ”4” accordingly.

Cylinder block (A) + Crankshaft (B)	0–2	3–5	6–8	9–11
Use bearing	”1”	”2”	”3”	”4”

EXAMPLE:

Cylinder block ”3” (A) + Crankshaft ”4” (B) = Total number 7 (Use bearing ”3”)

Item	Mark	mm (in.)
Cylinder block journal bore diameter (A)	”0”	52.000 – 52.002 (2.04724 – 2.04732)
	”1”	52.003 – 52.004 (2.04736 – 2.04740)
	”2”	52.005 – 52.006 (2.04744 – 2.04748)
	”3”	52.007 – 52.009 (2.04752 – 2.04760)
	”4”	52.010 – 52.011 (2.04764 – 2.04768)
	”5”	52.012 – 52.013 (2.04772 – 2.04776)
	”6”	52.014 – 52.015 (2.04788 – 2.04783)
Crankshaft journal diameter (B)	”0”	47.999 – 48.000 (1.88972 – 1.88976)
	”1”	47.997 – 47.998 (1.88965 – 1.88969)
	”2”	47.995 – 47.996 (1.88957 – 1.88961)
	”3”	47.993 – 47.994 (1.88949 – 1.88953)
	”4”	47.991 – 47.992 (1.88941 – 1.88945)
	”5”	47.988 – 47.990 (1.88929 – 1.88922)
Standard bearing center wall thickness	”1”	1.994 – 1.997 (0.07850 – 0.07862)
	”2”	1.998 – 2.000 (0.07866 – 0.07874)
	”3”	2.001 – 2.003 (0.07878 – 0.07886)
	”4”	2.004 – 2.006 (0.07890 – 0.07898)

25. INSTALL STRAIGHT PIN

(a) Using a plastic hammer, install the 9 straight pins to the cylinder block.

Standard protrusion:
Straight pin A 5 mm (0.200 in.)
Straight pin B 7.5 mm (0.295 in.)
Straight pin C 12 mm (0.472 in.)
Straight pin D 8 mm (0.315 in.)

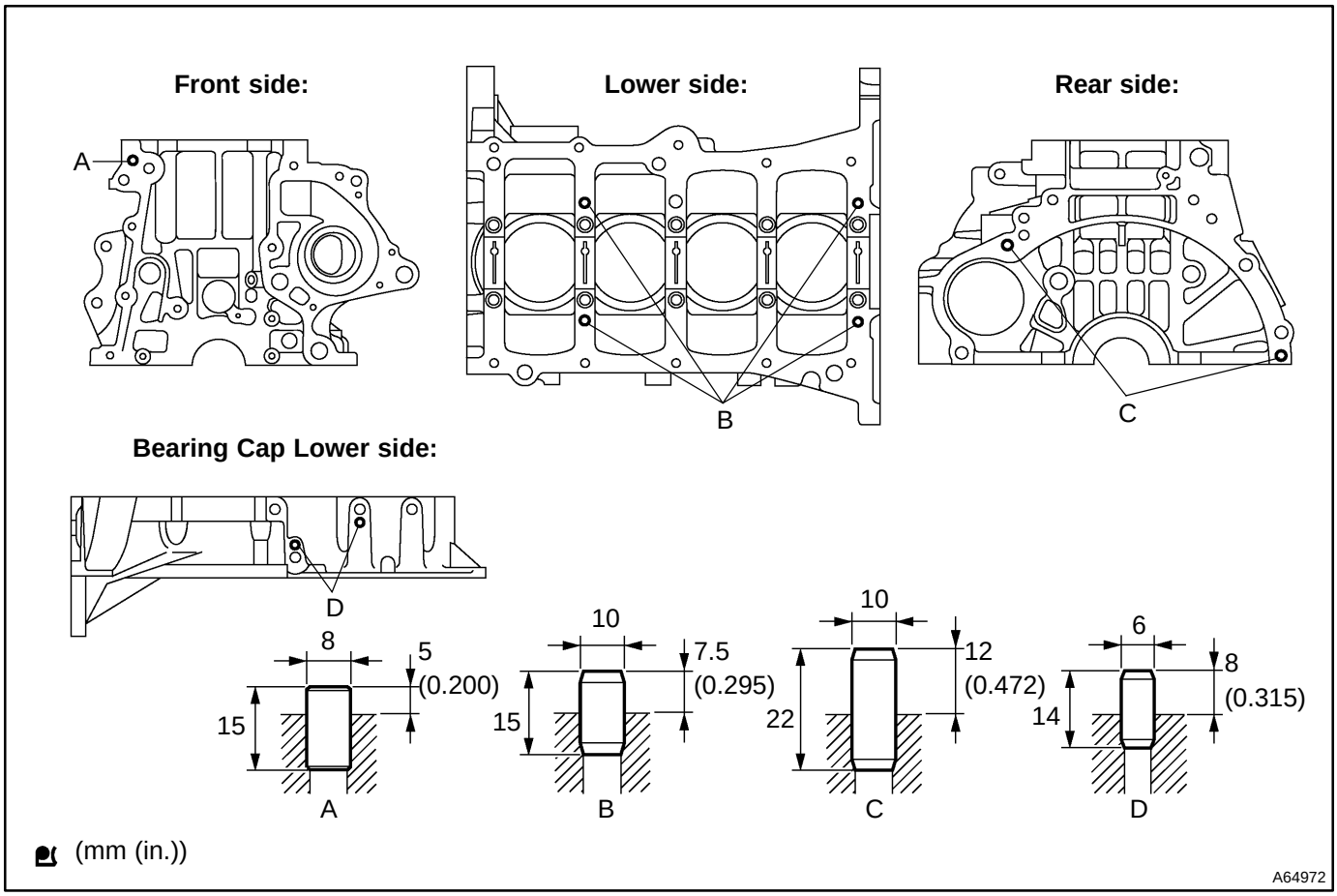

26. INSTALL RING PIN

(a) Using a plastic hammer, install the 5 ring pins to the cylinder block.

Standard protrusion:
Ring pin A 6 mm (0.236 in.)
RIng pin B 7 mm (0.276 in.)
Ring pin C 10 mm (0.394 in.)

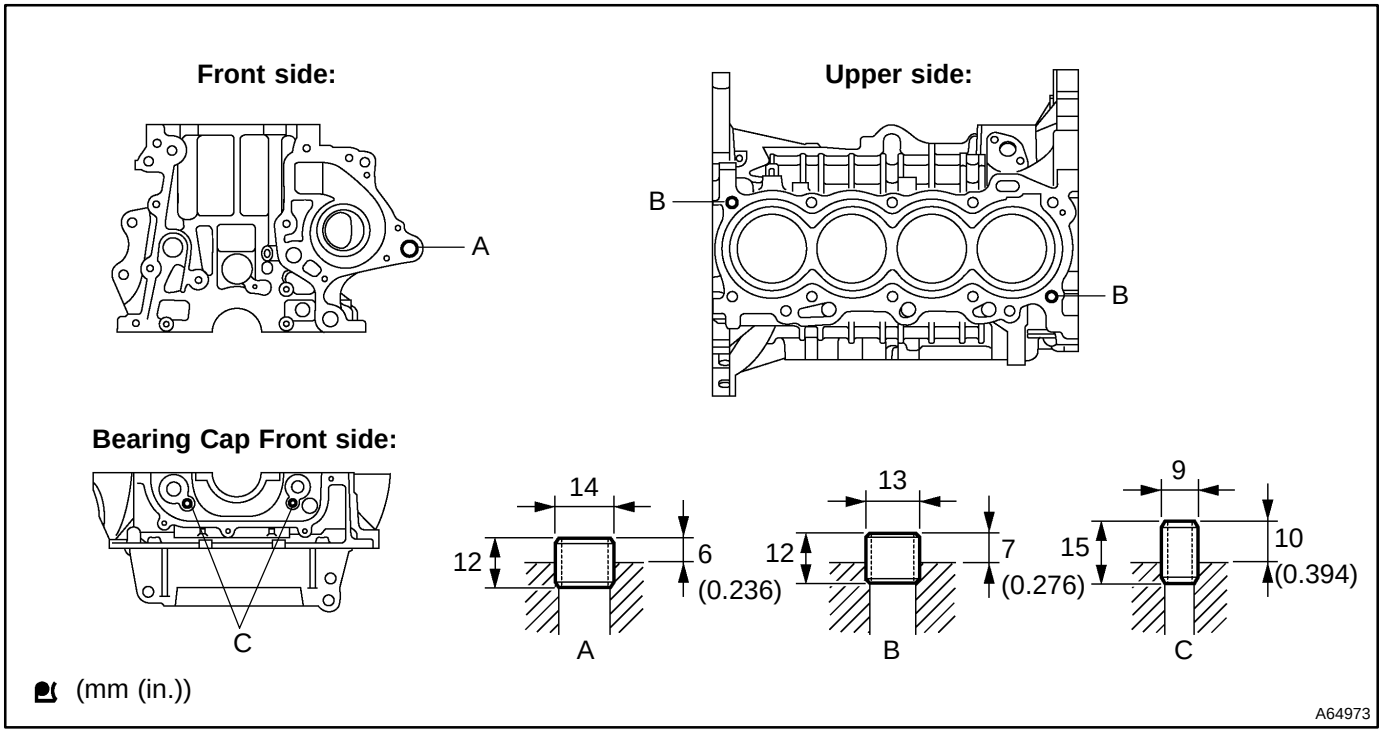

27. INSTALL STUD BOLT

(a) Using torx socket wrench E5 and E7, install the 9 stud bolt to the cylinder block.

Torque:
Stud bolt A, C, D and E 5.0 N·m (51 kgf·cm, 44 in.·lbf)
Stud bolt B 11 N·m (112 kgf·cm, 8 ft·lbf)

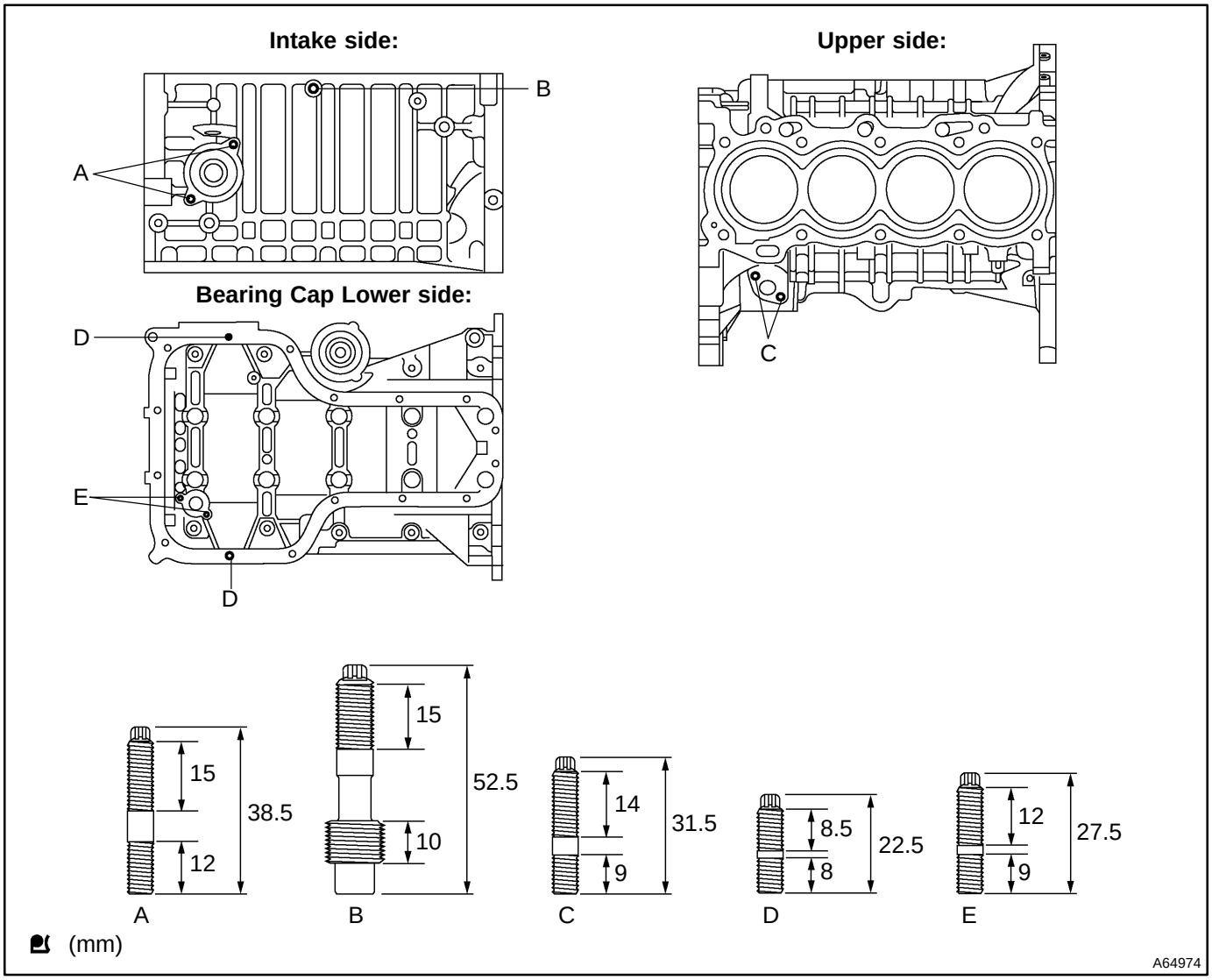

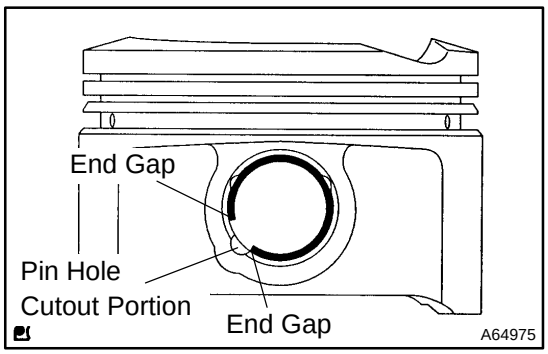

28. INSTALL W/PIN PISTON SUB–ASSY

(a) Using a small screwdriver, install a new snap ring at one end of the piston pin hole.

HINT:

Be sure that end gap of the snap ring is aligned with the pin hole cutout portion of the piston.

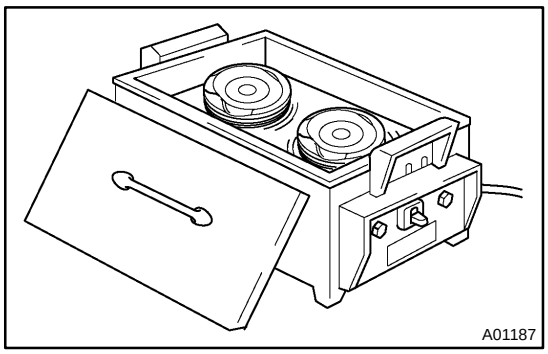

(b) Heat the piston to 80 – 90°C (176–194°F).

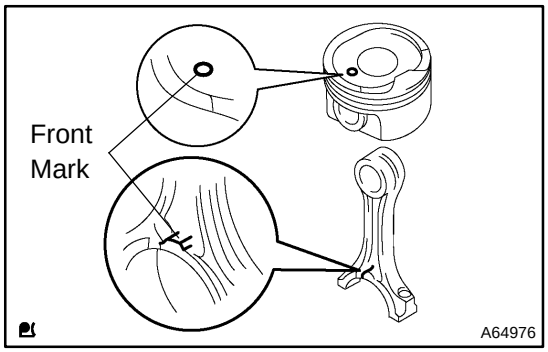

(c) Align the front marks on the piston with connecting rod, and push in the piston with your thumb.

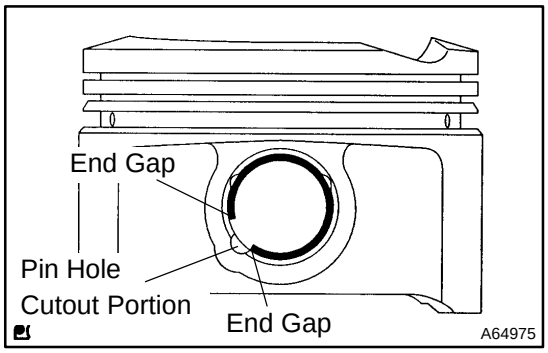

(d) Using a small screwdriver, install a new snap ring at one end of the piston pin hole.

HINT:

Be sure that end gap of the snap ring is aligned with the pin hole cutout portion of the piston.

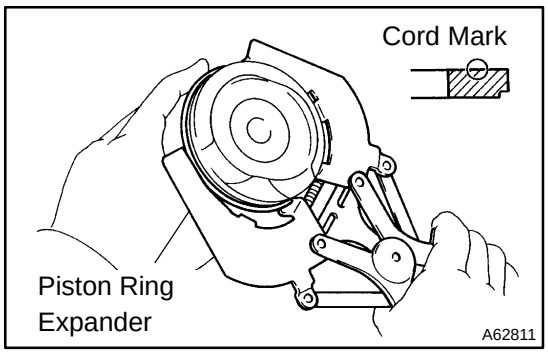

29. INSTALL PISTON RING SET

HINT:

In case of reusing the piston rings, install them to the matched pistons with the surfaces faced correctly.

(a) Install the oil ring expander and 2 side rails by hand.

(b) Using a piston ring expander, install the 2 compression rings with the code mark facing upward.

Code mark (No.2 only): 2R

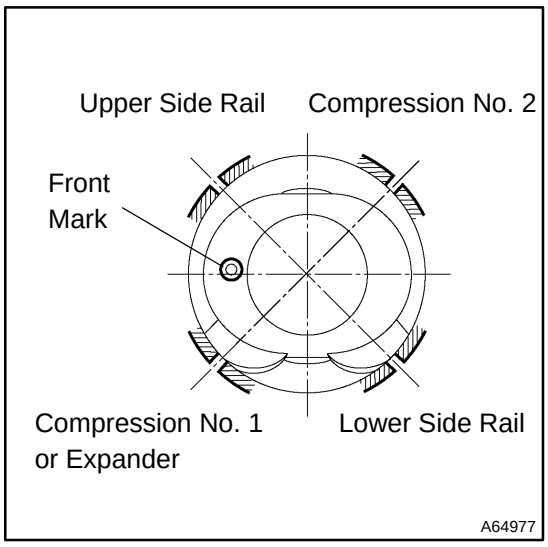

(c) Position the piston rings so that the ring ends are as shown.

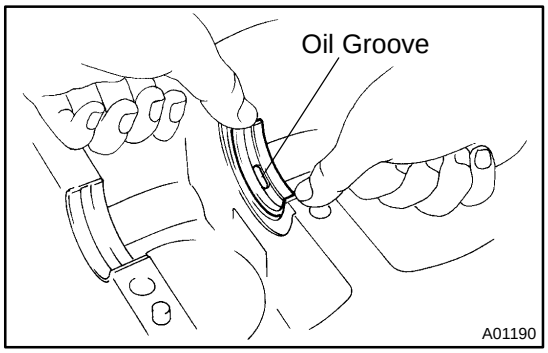

30. INSTALL CRANKSHAFT BEARING

(a) Install the upper bearing with an oil groove on cylinder block.

NOTICE:

Clean the backside of the bearing and the bearing surface of the bearing cap and let not stick the oils and fats.

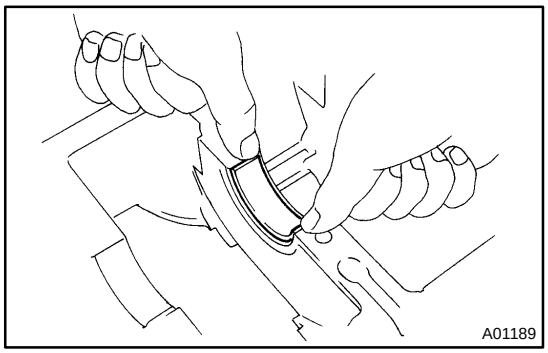

(b) Install the lower bearing on the bearing cap sub–assy.

NOTICE:

Clean the backside of the bearing and the bearing surface of the bearing cap and let not stick the oils and fats.

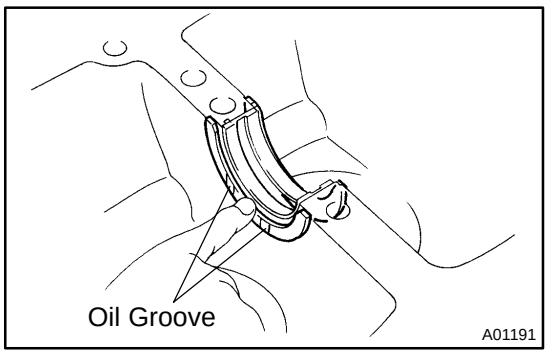

31. INSTALL CRANKSHAFT THRUST WASHER UPPER

(a) Install the 2 thrust washers under the No. 3 journal position of the cylinder block with the oil grooves facing outward.

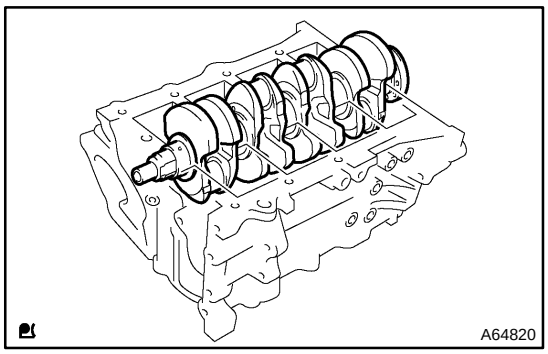

32. INSTALL CRANKSHAFT

(a) Apply engine oil to upper bearing and install the crankshaft on the cylinder block.

(b) Apply a light coat of engine oil on the bolt threads, the bolt seats, and the bearings of the bearing cap sub–assy.

(c) Install the crankshaft to the cylinder block.

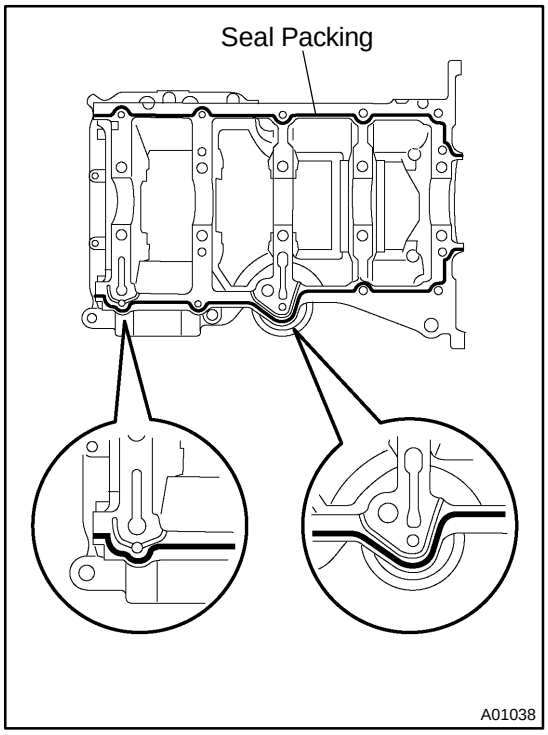

(d) Apply seal packing in the shape of bead (Diameter 2.5 – 3.5 mm (0.098 – 0.139 in.) consequently as shown in the illustration.

Seal packing: Part No. 08826–00080 or equivalent

NOTICE:

- **Remove any oil from the contact surface.**
- **Install the bearing cap sub–assembly within 3 minutes after applying seal packing.**
- **Do not put into engine oil within 2 hours after the installation.**

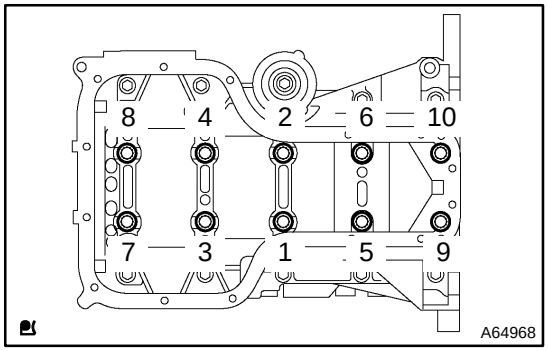

(e) Using SST, tighten the bolts in several passes, in the sequence shown, by the specified torque.

SST 09011–38121

Torque: 44 N·m (449 kgf·cm, 33 ft·lbf)

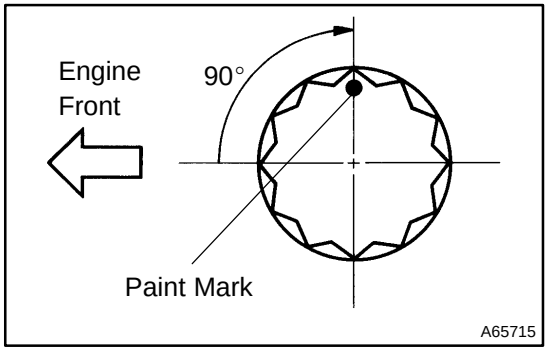

(f) Mark the front of the bearing cap sub–assy bolts with paint.

(g) Retighten the bearing cap sub–assy bolts by 90° as shown in the illustration.

(h) Check that the painted mark is now at a 90° angle to the front.

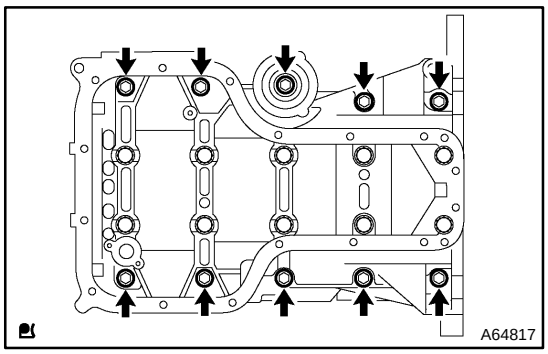

(i) Tighten 10 other bolts for the bearing cap.
Torque: 19 N·m (194 kgf·cm, 14 ft·lbf)

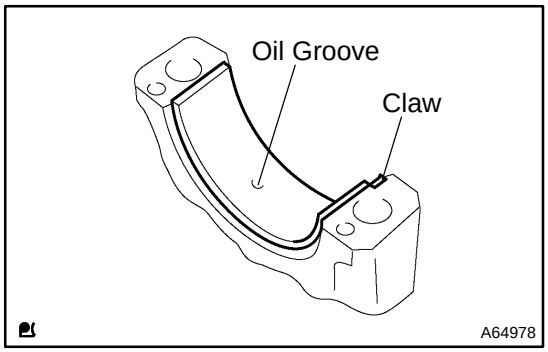

33. INSTALL CONNECTING ROD BEARING

(a) Align the connecting rod bearing claw with the oil groove of the connecting rod cap.

(b) Install the connecting rod bearing in the connecting rod cap.

NOTICE:

Clean the backside of the bearing and bearing surface of the connecting rod cap and let not stick the oils and fats.

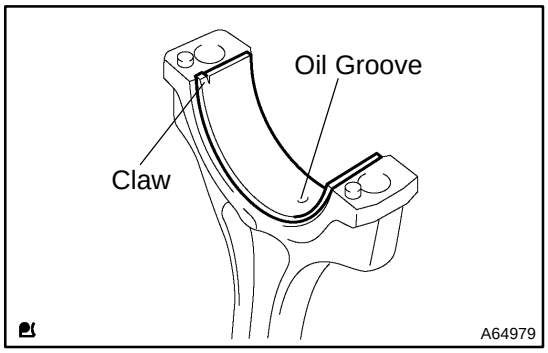

(c) Align the connecting rod bearing claw with the oil groove of the connecting rod.

(d) Install the connecting rod bearing in the connecting rod.

NOTICE:

Clean the backside of the bearing and bearing surface of the connecting rod and let not stick the oils and fats.

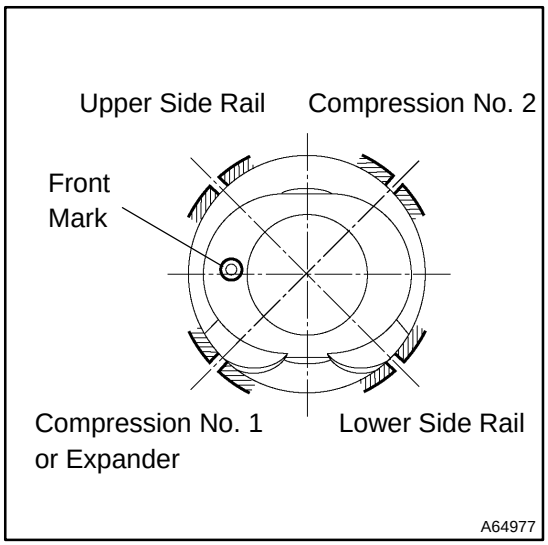

34. INSTALL CONNECTING ROD SUB–ASSY

(a) Position the piston rings so that the ring ends are as shown.

(b) Apply engine oil to the cylinder walls, the pistons, and the surfaces of connecting rod bearings.

(c) Check the position of the piston ring ends.

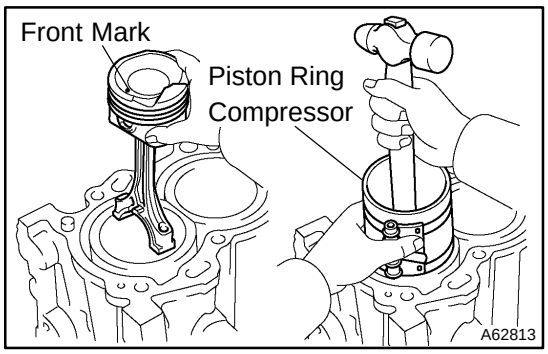

(d) Using a piston ring compressor, push the correctly numbered piston and connecting rod assemblies into each cylinder with the front mark of the piston facing forward.

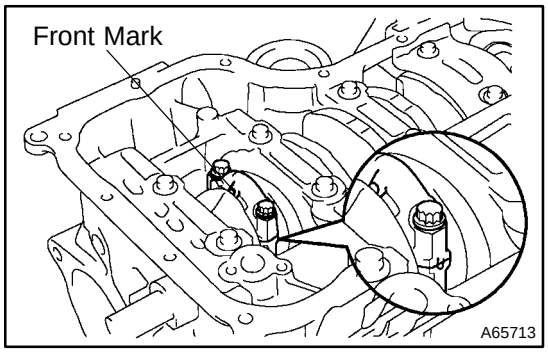

(e) Align the pin dowels of the connecting rod cap with the pins of the connecting rod, and install the connecting rod.

NOTICE:

- **Clean the backside and the surface of the connecting rod cap bearing and let not stick the oils and fats.**
- **Match the numbered connecting rod cap with the same numbered connecting rod.**

(f) Check that the protrusion of the connecting rod cap is facing in the correct direction.

(g) Apply a light coat of engine oil on the threads and under the heads of the connecting rod cap bolts.

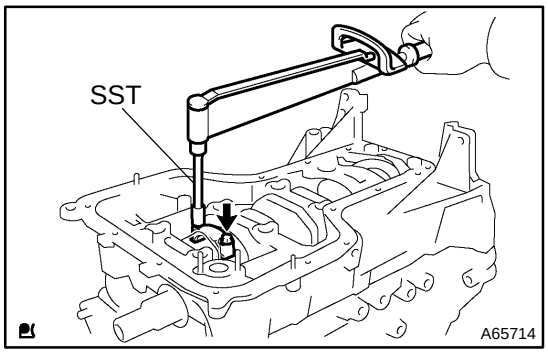

(h) Using SST, tighten the bolts in several passes by the specified torque.
SST 09205–16010
Torque: 20 N·m (204 kgf·cm, 15 ft·lbf)

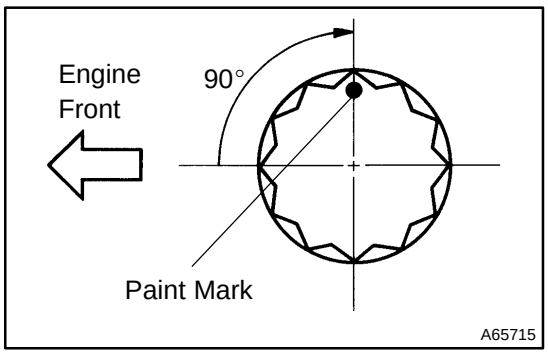

(i) Mark the front of the connecting cap bolts with paint.

(j) Retighten the cap bolts by 90° as shown in the illustration.

(k) Check that the crankshaft turns smoothly.

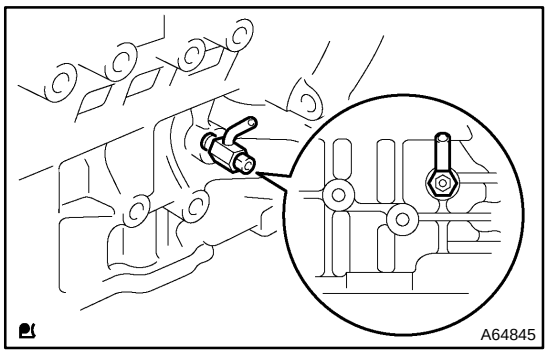

35. INSTALL CYLINDER BLOCK WATER DRAIN COCK SUB–ASSY

(a) Apply 2 or 3 threads of adhesive to the cylinder block water drain cock, and install it within 3 minutes.

Torque: 25 N·m (255 kgf·cm, 18 ft·lbf)

Adhesive:

Part No. 08833–00080, THREE BOND 1344, LOCTITE 242 or equivalent

(b) After applying the specified torque, rotate the cylinder block water drain cock clockwise until its drain port faces downward.

NOTICE:

- **Do not put into coolant in an hour after the installation.**
- **Do not rotate the drain union more than 360° in (b), and never loosen it after setting the union correctly.**

ENGINE ASSEMBLY (1ZZ–FE)

140OC–02

INSPECTION

1. **INSPECT COOLANT (See page 16–1)**
2. **INSPECT ENGINE OIL (See page 17–1)**
3. **INSPECT BATTERY (See page 19–12)**
4. **INSPECT AIR CLEANER FILTER ELEMENT SUB–ASSY**
5. **INSPECT SPARK PLUG (See page 18–2)**
6. **INSPECT FAN AND GENERATOR V BELT**

HINT:

You don't need to check the belt deflection because auto tensioner is adopted.

7. **INSPECT IGNITION TIMING**

(a) Warm up engine.

(b) When using hand–held tester or OBDII scan tool.

(1) Connect the hand–held tester or OBDII scan tool to the DLC3.

HINT:

Please refer to the hand–held tester or OBDII scan tool operator's manual for further details.

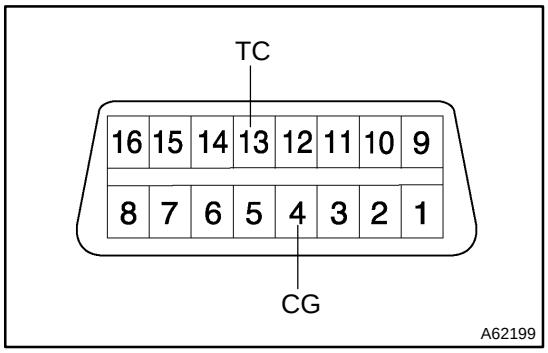

(c) When not using hand–held tester or OBDII scan tool.

(1) Using SST, connect terminal 13 (TC) and 4 (CG) of the DLC3.

SST 09843–18040

NOTICE:

- **Be sure not to connect incorrectly. It causes breakage of the engine.**
- **Turn OFF all electrical systems.**
- **Operate the inspection when the cooling fan motor is turned OFF**

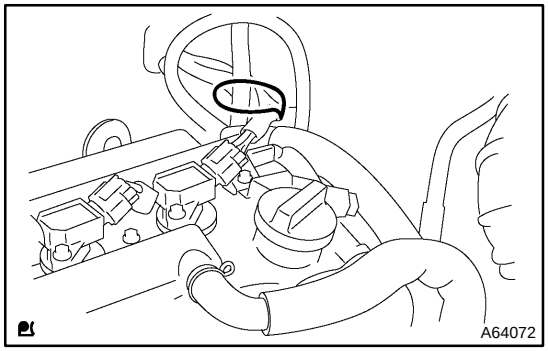

(2) Remove the 2 nuts, 2 clips and cylinder head cover.

(3) Pull out the wire harness as shown in the illustration.

(4) Connect the clip of the timing light to the engine.

NOTICE:

- **Use a timing light which can detect the first signal.**
- **After checking, be sure to tape the wire harness.**

(5) Inspect ignition timing at idle.

Ignition timing: 8 – 12°BTDC

NOTICE:

When checking the ignition timing, the transmission is at neutral position.

HINT:

After engine rpm is kept at 1,000 – 1,300 rpm for 5 seconds, check that it returns idle speed.

(6) Disconnect the terminal 13 (TC) and 4 (CG) of the DLC3.

(7) Inspect ignition timing at idle.

Ignition timing: 10 – 18 °BTDC

(8) Confirm that ignition timing moves to advanced angle side when the engine rpm is increased.

(9) Remove the timing light.
(10) Install cylinder head cover No. 2 with the 2 nuts and 2 clips.

Torque: 7.0 N·m (71 kgf·cm, 62 in.·lbf)

8. INSPECT ENGINE IDLE SPEED

(a) Warm up engine.
(b) When using hand–held tester or OBDII scan tool.
(1) Connect the hand–held tester or OBDII scan tool to the DLC3.

HINT:
Please refer to the hand – held tester or OBDII scan tool operator's manual for further details.

(c) Check the idle speed.
Idle speed: 650 – 750 rpm

NOTICE:
- **Check idle speed with cooling fan OFF.**
- **Switch off all accessories and air conditioning.**

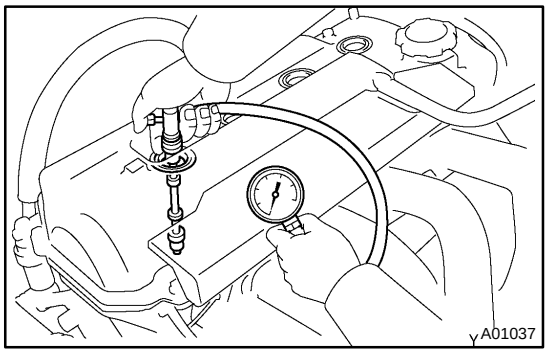

9. INSPECT COMPRESSION

(a) Warm up and stop engine.
(b) Remove ignition coil.
(c) Remove spark plugs.
(d) Inspect cylinder compression pressure.
SST 09992–00500
(1) Insert a compression gauge into the spark plug hole.
(2) Fully open the throttle.
(3) While cranking the engine, measure the compression pressure.

Compression pressure
1,300 kPa (13.3 kgf·cm^2, 189 psi)
Minimum pressure: 1,000 kPa (10.2 kgf·cm^2, 145 psi)
Difference between each cylinder:
100 kPa (1.0 kgf·cm^2, 15 psi)

NOTICE:
- **Always use a fully charged battery to obtain engine speed of 250 rpm or more.**
- **Check other cylinder's compression pressure in the same way.**
- **This measurement must be done in as short a time as possible.**

(4) If the cylinder compression in one more cylinders is low, pour a small amount of engine oil into the cylinder through the spark plug hole and repeat steps (1) through (3) for cylinders with low compression.

HINT:
- If adding oil helps the compression, it is likely that the piston rings and/or cylinder bore are worn or damaged.
- If pressure stays low, a valve may be sticking or seating is improper, or there may be leakage past the gasket.

10. INSPECT CO/HC

(a) Start the engine.
(b) Race engine at 2,500 rpm for approx. 180 seconds.
(c) Insert CO/HC meter testing probe at least 40 cm (1.3 ft) into tailpipe during idling.
(d) Immediately check CO/HC concentration at idle and/or 2,500 rpm.

HINT:

- Complete the measuring within 3 minutes.
- When doing the 2 mode (idle and 2,500 rpm) test, these measuring orders are prescribed by the applicable local regulations.

(e) If the CO/HC concentration does not comply with regulations, troubleshoot in the order given below.
  (1) Check heated oxygen sensor operation. (See page 05–51 or 05–63)
  (2) See the table below for possible causes, and then inspect and correct the applicable causes if necessary.

CO	HC	Problems	Causes
Normal	High	Rough idle	3. Faulty ignitions: • Incorrect timing • Fouled, shorted or improperly gapped plugs 4. Incorrect valve clearance 5. Leaky intake and exhaust valves 6. Leaky cylinders
Low	High	Rough idle (Fluctuating HC reading)	1. Vacuum leaks: • PCV hoses • Intake manifold • Throttle body • ISC valve • Brake booster line 2. Lean mixture causing misfire
High	High	Rough idle (Black smoke form exhaust)	1. Restricted air filter 2. Plugged PCV valve 3. Faulty EFI systems: • Faulty pressure regulator • Defective water temperature sensor • DEFECTIVE Air–flow meter • Faulty ECM • Faulty injectors • Faulty throttle position sensor

ENGINE ASSEMBLY (2ZZ–GE)

140R4–01

INSPECTION

1. **INSPECT COOLANT (See page 16–6)**
2. **INSPECT ENGINE OIL(See page 17–12)**
3. **INSPECT BATTERY(See page 19–12)**
4. **INSPECT AIR CLEANER FILTER ELEMENT SUB–ASSY**
5. **INSPECT SPARK PLUG(See page 18–5)**
6. **INSPECT IGNITION TIMING**

(a) Warm up engine.

(b) When using hand–held tester or OBDII scan tool.

(1) Connect the hand–held tester or OBDII scan tool to the DLC3.

HINT:

Please refer to the hand–held tester or OBDII scan tool operator's manual for further details.

(c) When not using hand–held tester or OBDII scan tool.

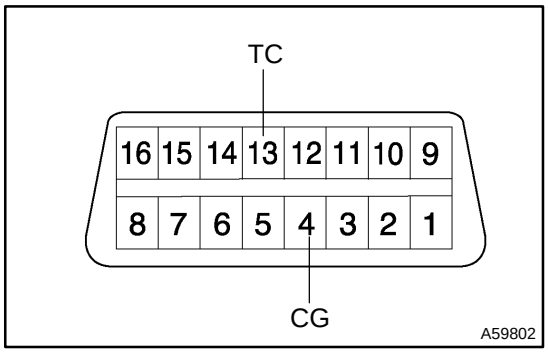

(1) Using SST,connect terminals 13 (TC) and 4 (CG) of DLC3.

SST 09843–18040

NOTICE:

- **Be sure not to connect incorrectly. It causes breakage of the engine.**
- **Turn OFF all electrical systems.**
- **Operate the inspection when the cooling fan motor is turned OFF.**

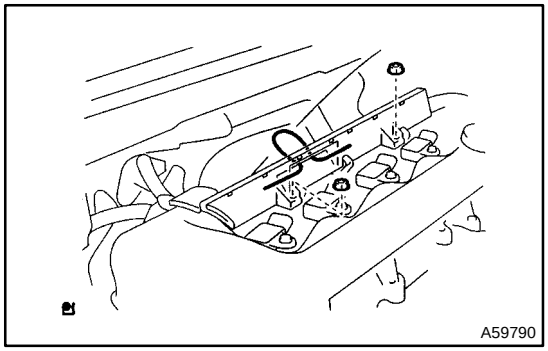

(2) Remove the 3 bolts, the nut and the cylinder head cover No. 2.

(3) Pull out the wire harness as shown in the illustration.

(4) Connect timing light to engine.

NOTICE:

- **Use a timing light which can detect the first signal.**
- **After checking, be sure to tape the wire harness.**

(5) Inspect ignition timing at idle.

Ignition timing: 8 – 12°BTDC

NOTICE:

When checking the ignition timing, the transmission is at neutral position.

HINT:

After engine rpm is kept at 1,000 – 1,300 rpm for 5 seconds, check that it returns idle speed.

(6) Disconnect the terminal 13 (TC) and 4 (CG) of the DLC3.

(7) Inspect ignition timing at idle.

Ignition timing:

M/T 4 – 12° BTDC

A/T 10 – 18° BTDC

(8) Confirm that ignition timing moves to advanced angle side when the engine rpm is increased.

(9) Remove the timing light.

(10) Install cylinder head cover No. 2 with the 3 bolts and the nut.

Torque: 7.0 N·m (71 kgf·cm, 62 in.·lbf)

7. INSPECT ENGINE IDLE SPEED

(a) Warm up engine.

(b) When using hand–held tester or OBDII scan tool.

(1) Connect the hand–held tester or OBDII scan tool to the DLC3.

HINT:

Please refer to the hand – held tester or OBDII scan tool operator's manual for further details.

(c) Check the idle speed.

Idle speed:

M/T 750 – 850 rpm

A/T 700 – 800 rpm

NOTICE:

- **Check idle speed with cooling fan OFF.**
- **Switch off all accessories and air conditioning.**

SST 09843–18040

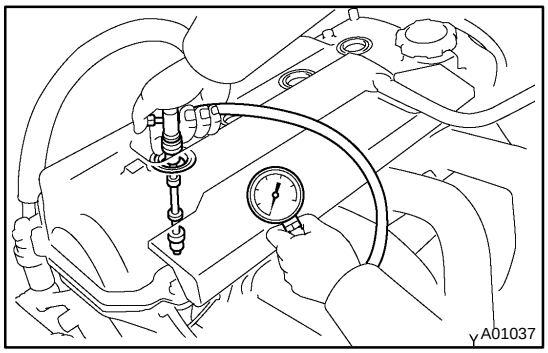

8. INSPECT COMPRESSION

(a) Warm up and stop engine.

(b) Remove ignition coil.

(c) Remove spark plugs.

(d) Inspect cylinder compression pressure.

SST 09992–00500

(1) Insert a compression gauge into the spark plug hole.

(2) Fully open the throttle.

(3) While cranking the engine, measure the compression pressure.

NOTICE:

- **Always use a fully charged battery to obtain engine speed of 250 rpm or more.**
- **Check other cylinder's compression pressure in the same way.**
- **This measurement must be done in as short a time as possible.**

Compression pressure:

1,400 kpa (14.3 kgf/cm^2, 203 psi)

Minimum pressure:

1,000 kpa (10.3 kgf/cm^2, 145 psi)

Difference between each cylinder:

110 kpa (1.1 kgf/cm^2, 16 psi)

(4) If the cylinder compression in one more cylinders is low, pour a small amount of engine oil into the cylinder through the spark plug hole and repeat steps (1) through (3) for cylinders with low compression.
- If adding oil helps the compression, it is likely that the piston rings and/or cylinder bore are worn or damaged.
- If pressure stays low, a valve may be sticking or seating is improper, or there may be leakage past the gasket.

9. INSPECT CO/HC

(a) Start engine.
(b) Race engine at 2,500 rpm for approx. 180 seconds.
(c) Insert CO/HC meter testing probe at least 40 cm (1.3 ft) into tailpipe during idling.
(d) Immediately check CO/HC concentration at idle and/or 2,500 rpm.

HINT:
- Complete the measuring within 3 minutes.
- When doing the 2 mode (idle and 2,500 rpm) test, these measuring orders are prescribed by the applicable local regulations.

(e) If the CO/HC concentration does not comply with regulations, troubleshoot in the order given below.
(1) Check heated oxygen sensor operation.(See page 12–13)

CO	HC	Problems	Causes
Normal	High	Rough idle	1. Faulty ignitions: • Incorrect timing • Fouled, shorted or improperly gapped plugs 2. Incorrect valve clearance 3. Leaky intake and exhaust valves 4. Leaky cylinders
Low	High	Rough idle (Fluctuating HC reading)	1. Vacuum leaks: • PCV hoses • Intake manifold • Throttle body • ISC valve • Brake booster line 2. Lean mixture causing misfire
High	High	Rough idle (Black smoke form exhaust)	1. Restricted air filter 2. Plugged PCV valve 3. Faulty EFI systems: • Faulty pressure regulator • Defective water temperature sensor • DEFECTIVE Air–flow meter • Faulty ECM • Faulty injectors • Faulty throttle position sensor

PARTIAL ENGINE ASSY (2ZZ–GE)

COMPONENTS

140R7–01

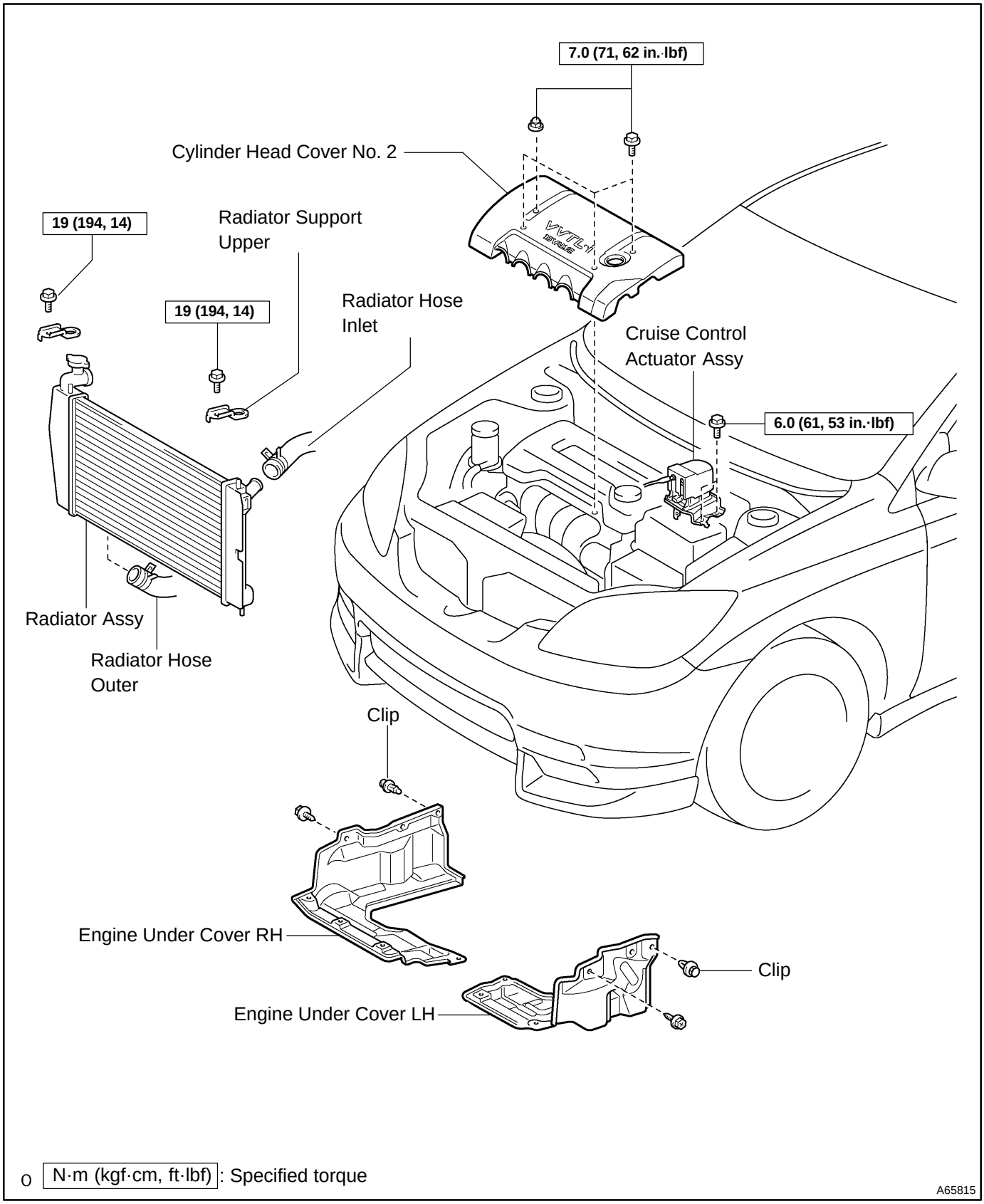

o 7.0 (71, 62 in.·lbf) : Specified torque

A65815

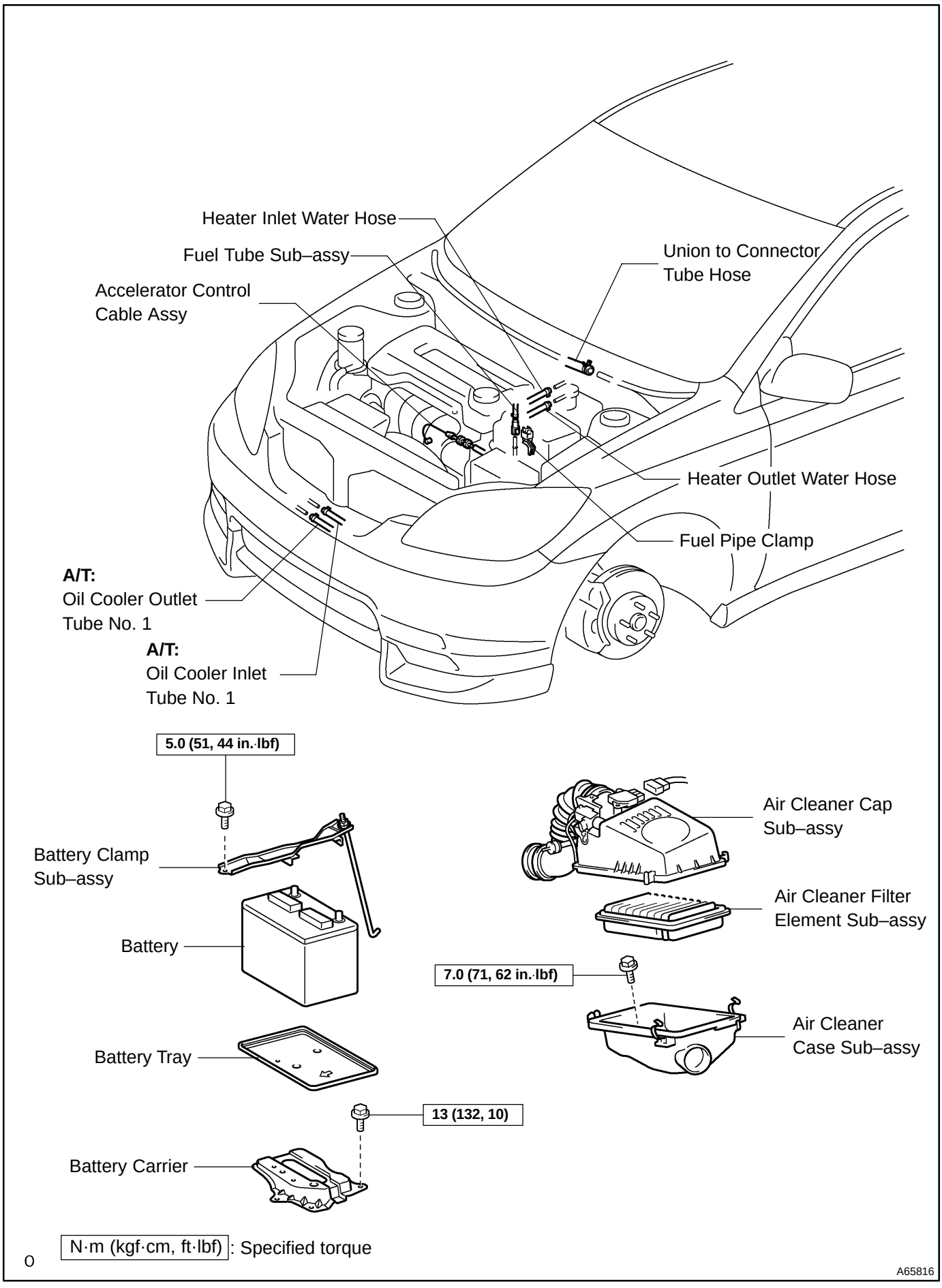
Heater Inlet Water Hose
Fuel Tube Sub–assy
Accelerator Control Cable Assy
Union to Connector Tube Hose
Heater Outlet Water Hose
Fuel Pipe Clamp
A/T:
Oil Cooler Outlet Tube No. 1
A/T:
Oil Cooler Inlet Tube No. 1
5.0 (51, 44 in.·lbf)
Battery Clamp Sub–assy
Battery
Battery Tray
13 (132, 10)
Battery Carrier
Air Cleaner Cap Sub–assy
Air Cleaner Filter Element Sub–assy
7.0 (71, 62 in.·lbf)
Air Cleaner Case Sub–assy
N·m (kgf·cm, ft·lbf): Specified torque
A65816

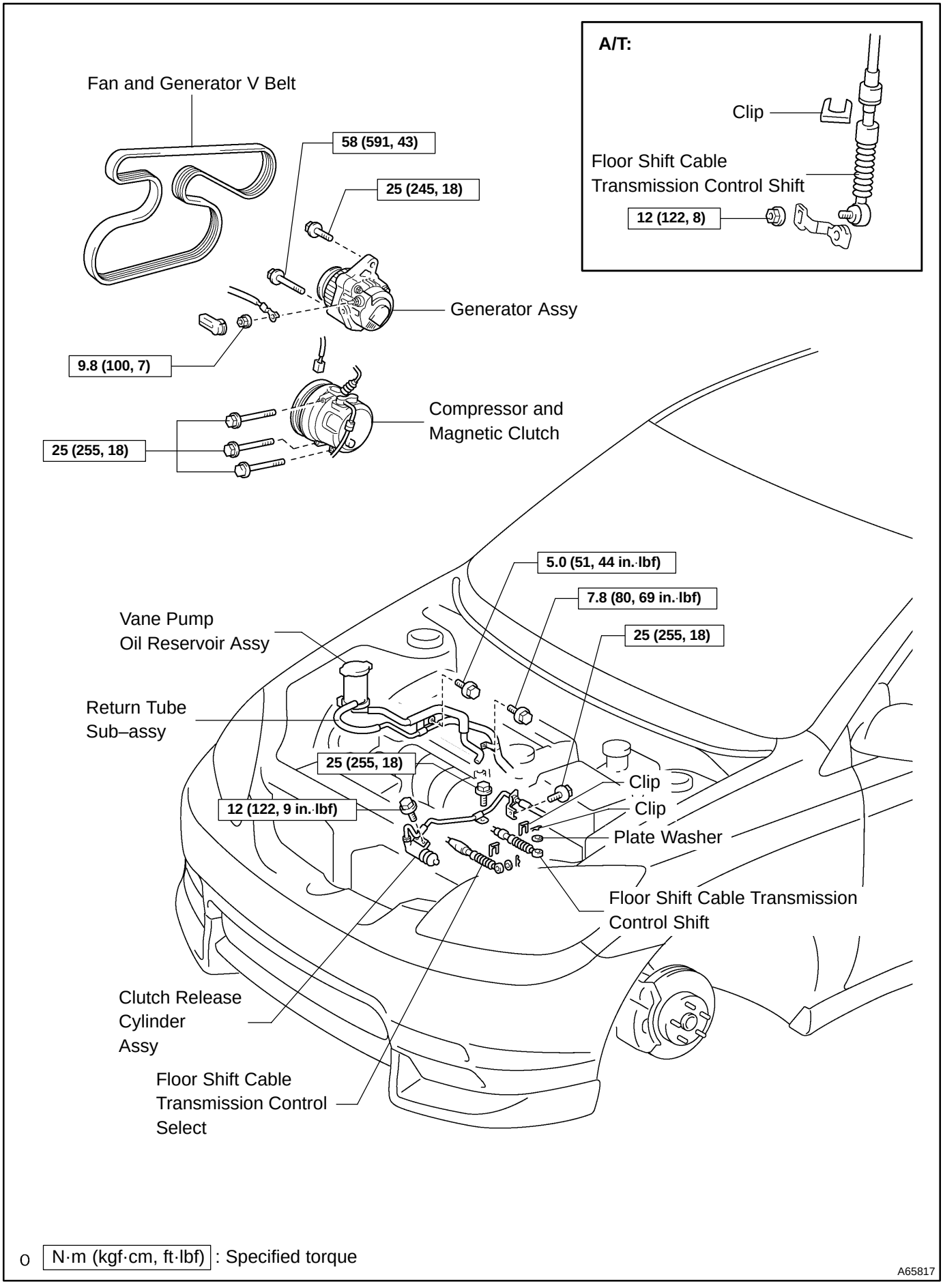

o N·m (kgf·cm, ft·lbf) : Specified torque

A65817

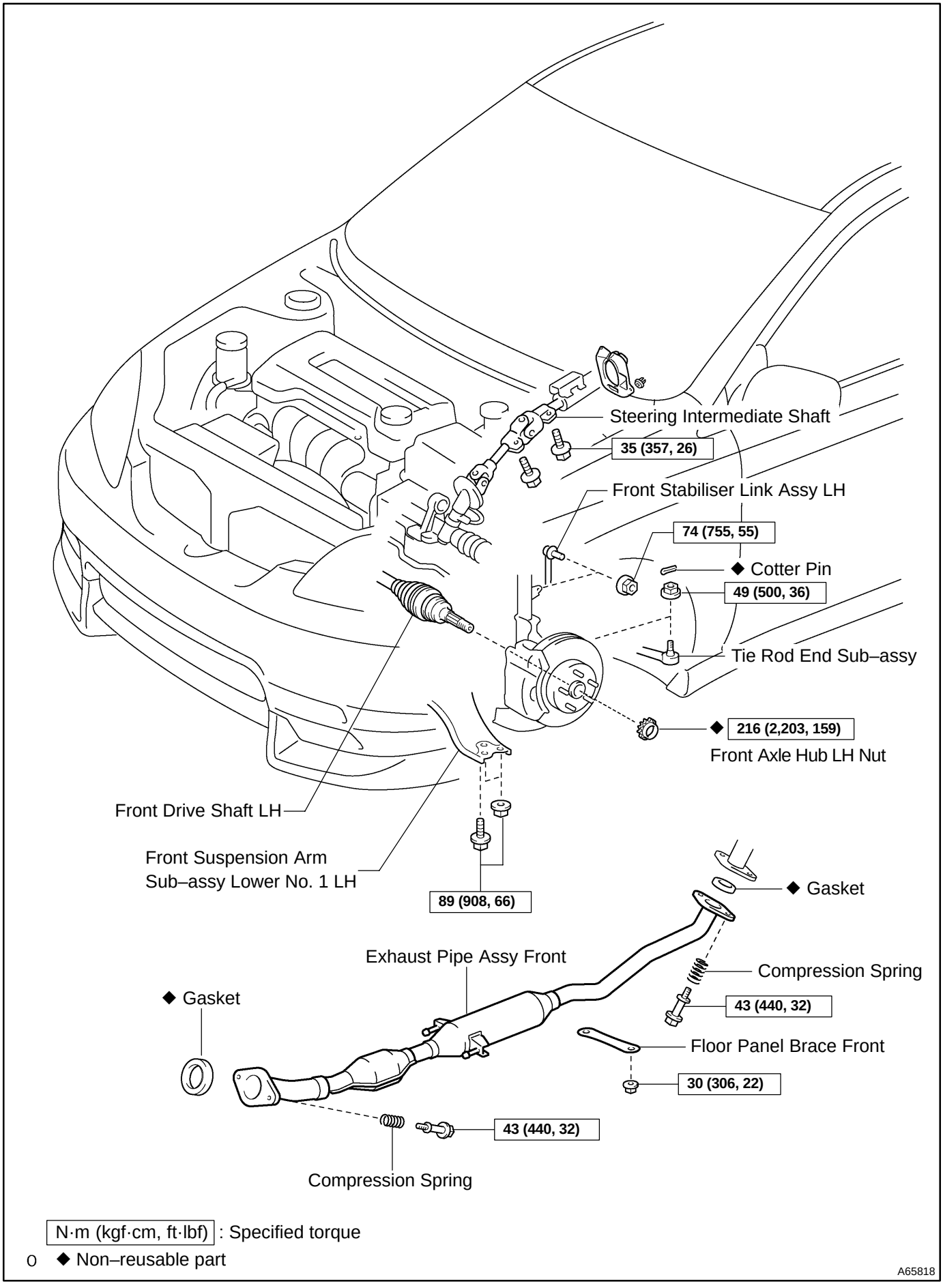
Steering Intermediate Shaft
35 (357, 26)
Front Stabiliser Link Assy LH
74 (755, 55)
◆ Cotter Pin
49 (500, 36)
Tie Rod End Sub–assy
◆ 216 (2,203, 159)
Front Axle Hub LH Nut
Front Drive Shaft LH
Front Suspension Arm
Sub–assy Lower No. 1 LH
89 (908, 66)
◆ Gasket
Exhaust Pipe Assy Front
Compression Spring
◆ Gasket
43 (440, 32)
Floor Panel Brace Front
30 (306, 22)
43 (440, 32)
Compression Spring
N·m (kgf·cm, ft·lbf) : Specified torque
◆ Non–reusable part
A65818

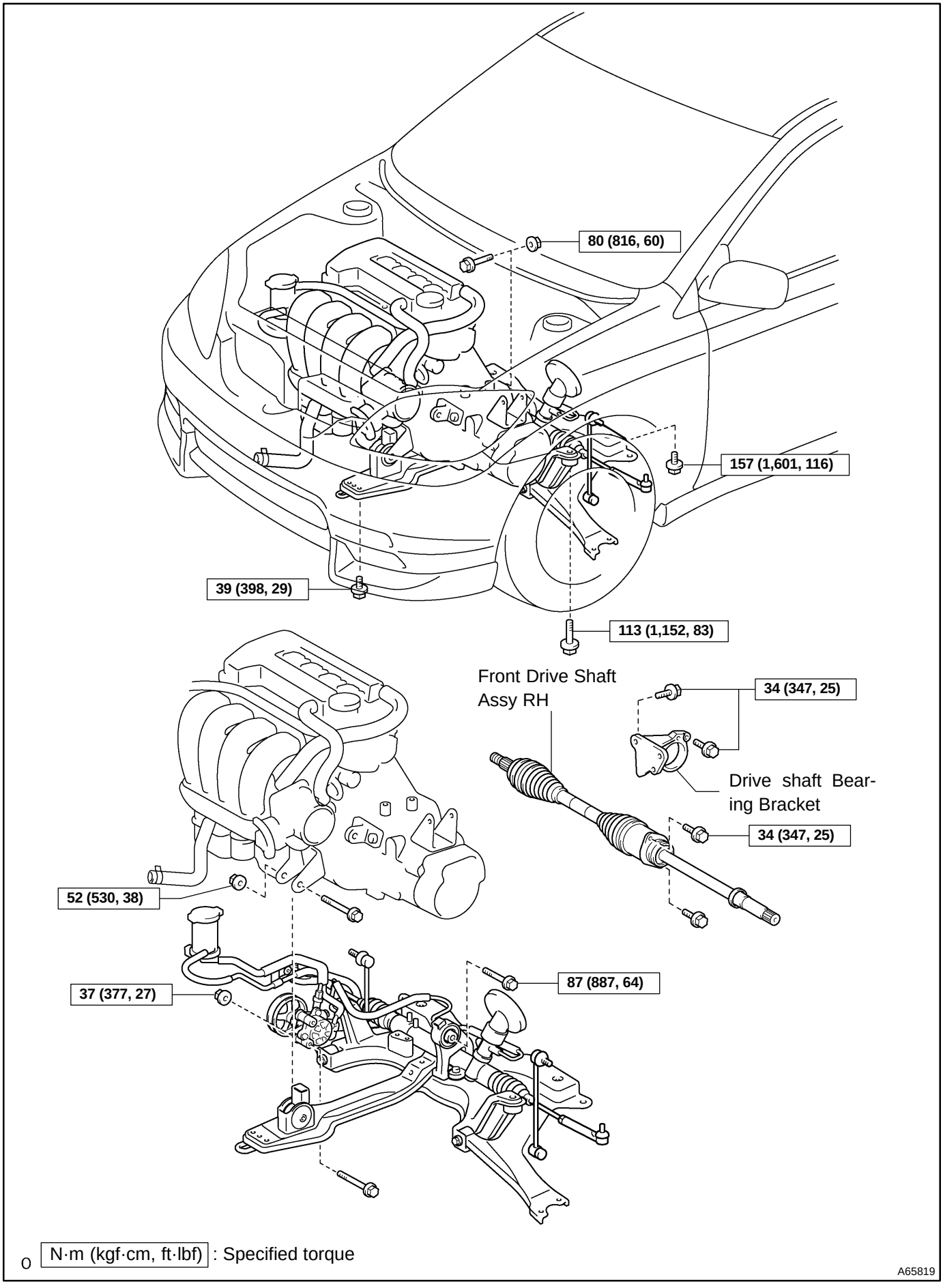
80 (816, 60)
157 (1,601, 116)
39 (398, 29)
113 (1,152, 83)
Front Drive Shaft Assy RH
34 (347, 25)
Drive shaft Bearing Bracket
34 (347, 25)
52 (530, 38)
37 (377, 27)
87 (887, 64)
o N·m (kgf·cm, ft·lbf) : Specified torque
A65819

M/T:

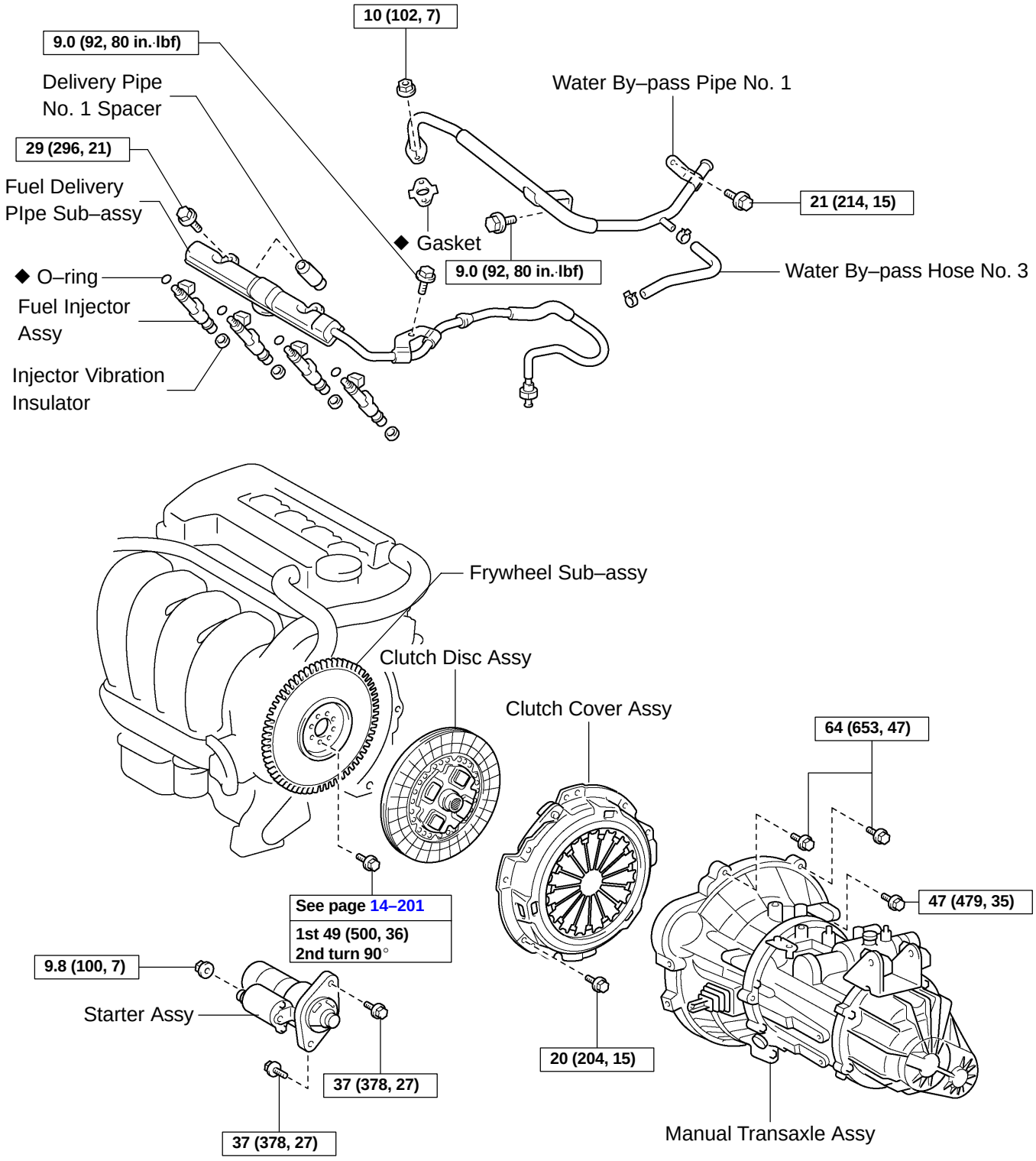

N·m (kgf·cm, ft·lbf) : Specified torque

◆ Non–reusable part

A65820

A/T:

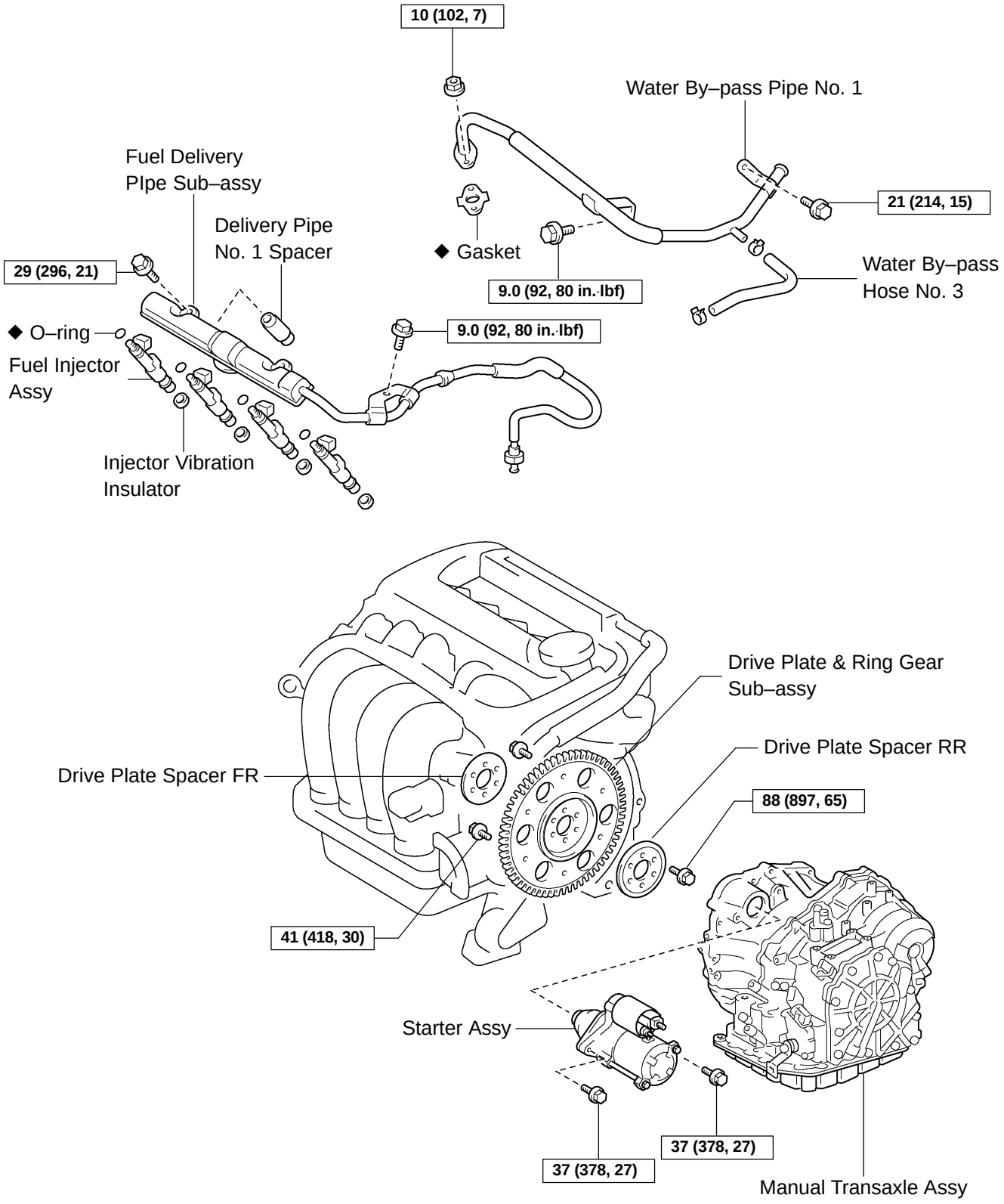

N·m (kgf·cm, ft·lbf) : Specified torque

◆ Non–reusable part

A65821

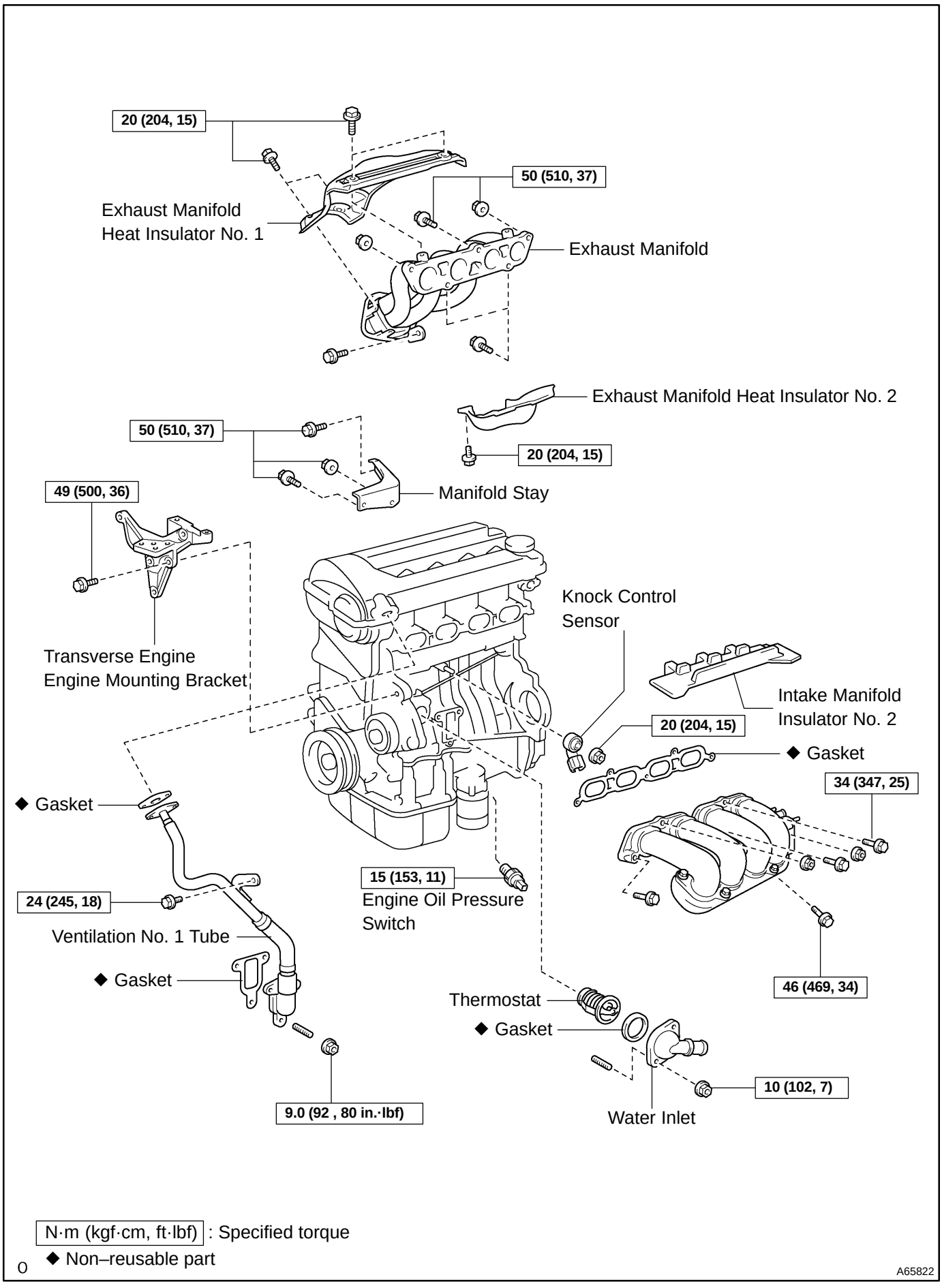
20 (204, 15)
50 (510, 37)
Exhaust Manifold
Heat Insulator No. 1
Exhaust Manifold
Exhaust Manifold Heat Insulator No. 2
50 (510, 37)
20 (204, 15)
Manifold Stay
49 (500, 36)
Transverse Engine
Engine Mounting Bracket
Knock Control
Sensor
Intake Manifold
Insulator No. 2
20 (204, 15)
◆ Gasket
34 (347, 25)
◆ Gasket
15 (153, 11)
Engine Oil Pressure
Switch
24 (245, 18)
Ventilation No. 1 Tube
◆ Gasket
46 (469, 34)
Thermostat
◆ Gasket
10 (102, 7)
9.0 (92 , 80 in.·lbf)
Water Inlet
N·m (kgf·cm, ft·lbf) : Specified torque
◆ Non–reusable part
A65822

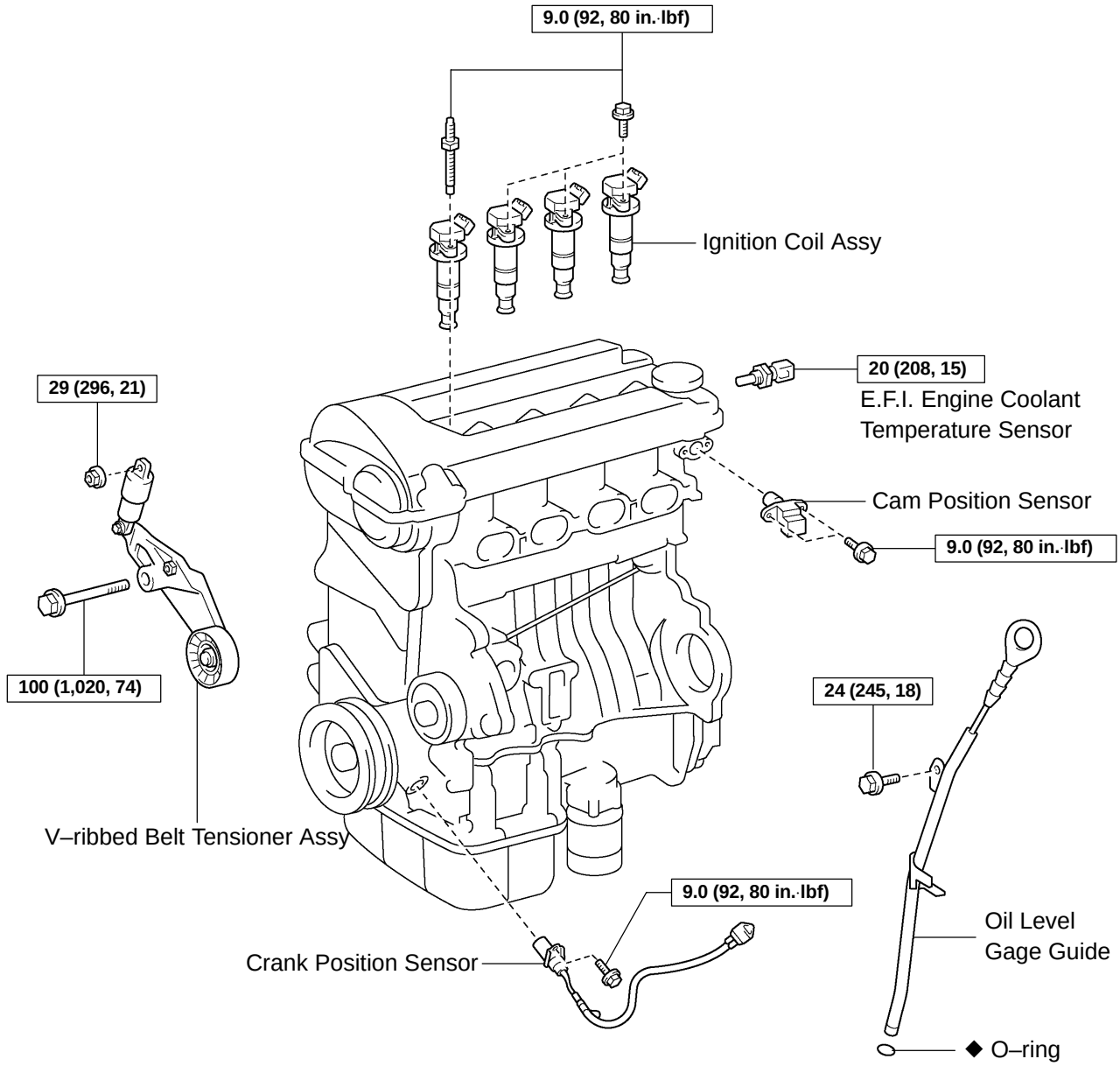

N·m (kgf·cm, ft·lbf) : Specified torque

◆ Non–reusable part

A65823

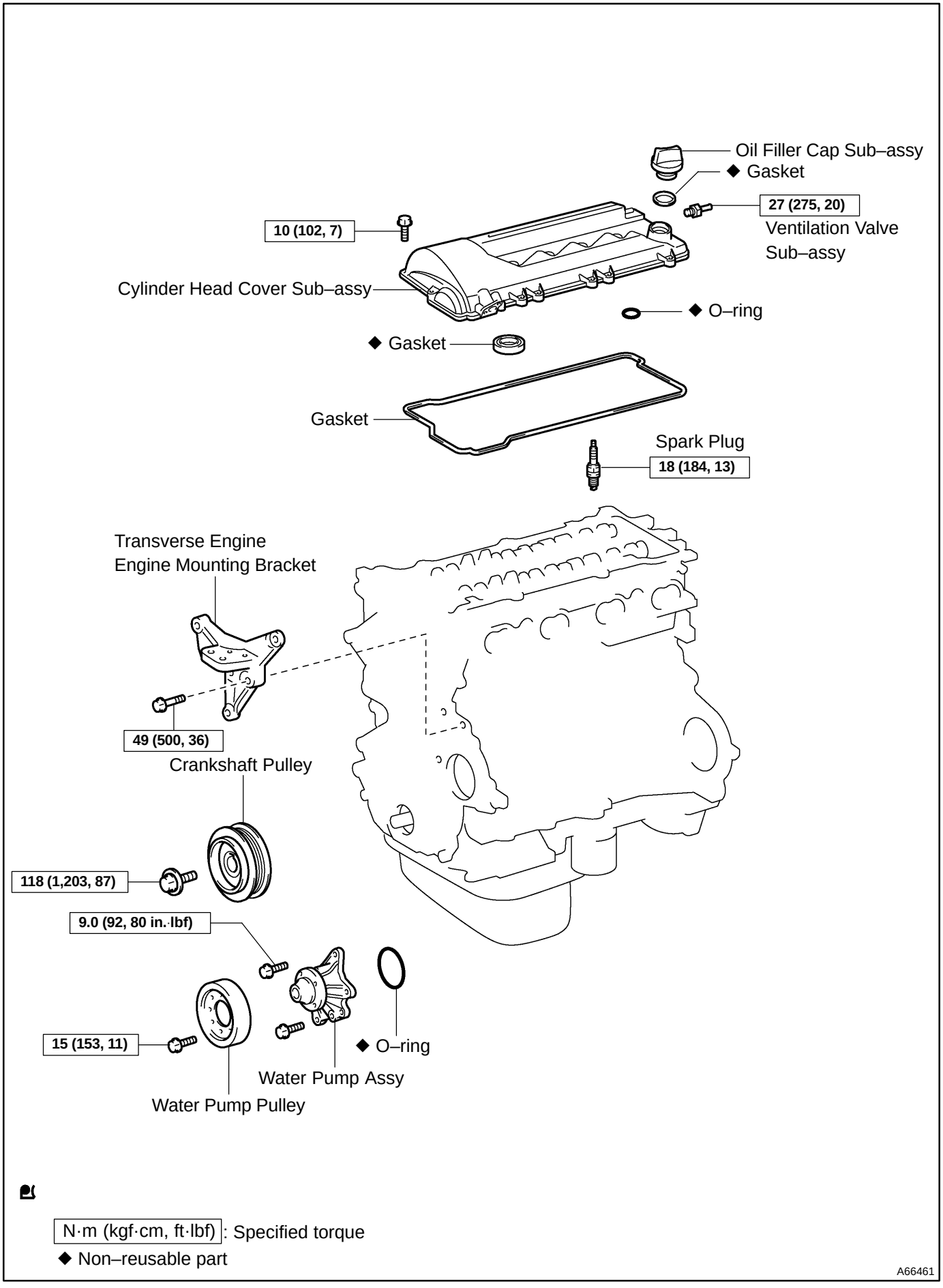

N·m (kgf·cm, ft·lbf): Specified torque

◆ Non–reusable part

A66461

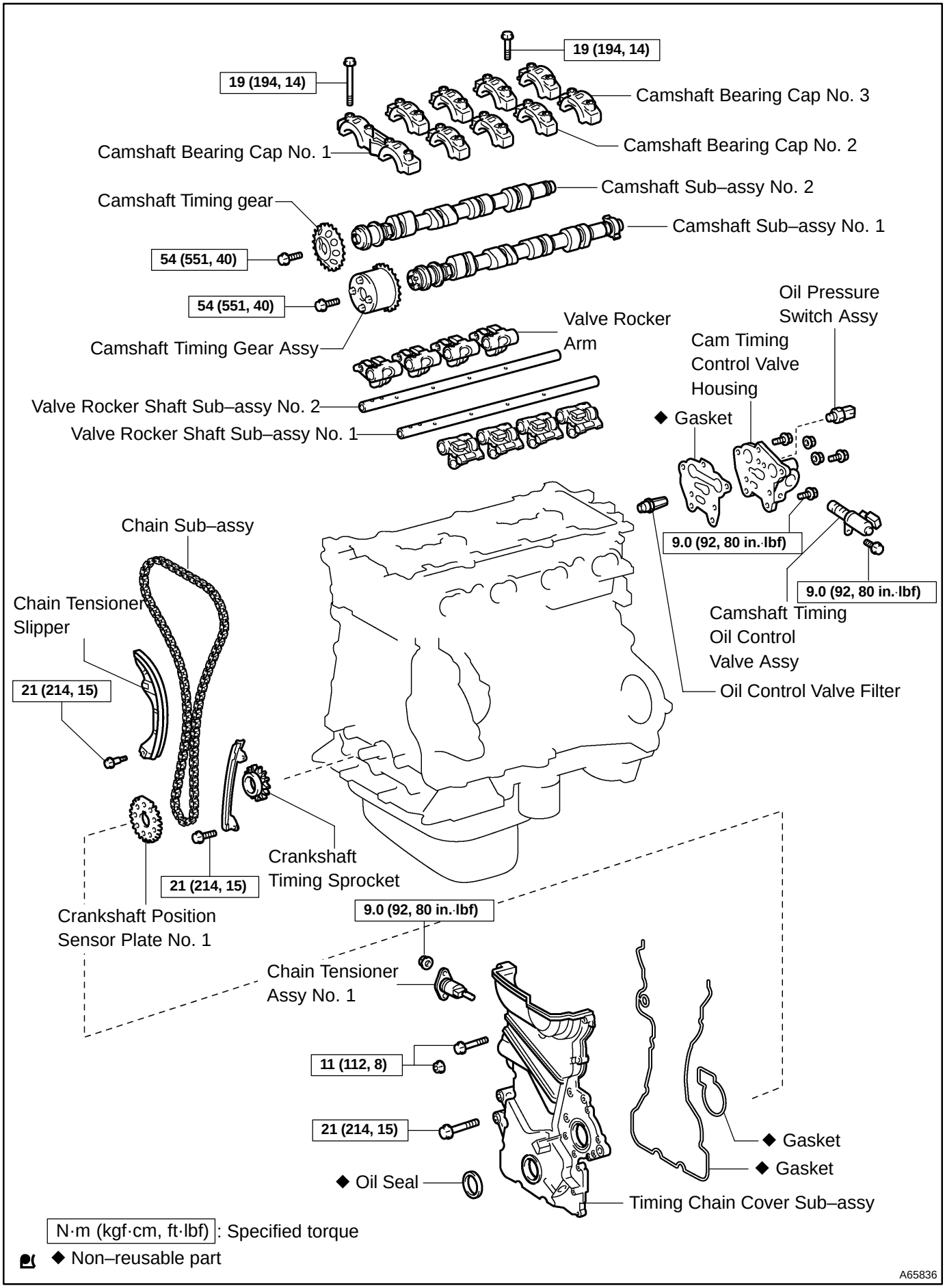
19 (194, 14)
19 (194, 14)
Camshaft Bearing Cap No. 3
Camshaft Bearing Cap No. 2
Camshaft Bearing Cap No. 1
Camshaft Sub–assy No. 2
Camshaft Timing gear
Camshaft Sub–assy No. 1
54 (551, 40)
54 (551, 40)
Oil Pressure Switch Assy
Valve Rocker Arm
Camshaft Timing Gear Assy
Cam Timing Control Valve Housing
◆ Gasket
Valve Rocker Shaft Sub–assy No. 2
Valve Rocker Shaft Sub–assy No. 1
Chain Sub–assy
9.0 (92, 80 in.·lbf)
9.0 (92, 80 in.·lbf)
Chain Tensioner Slipper
Camshaft Timing Oil Control Valve Assy
21 (214, 15)
Oil Control Valve Filter
Crankshaft Timing Sprocket
21 (214, 15)
Crankshaft Position Sensor Plate No. 1
9.0 (92, 80 in.·lbf)
Chain Tensioner Assy No. 1
11 (112, 8)
21 (214, 15)
◆ Gasket
◆ Gasket
◆ Oil Seal
Timing Chain Cover Sub–assy
N·m (kgf·cm, ft·lbf): Specified torque
◆ Non–reusable part
A65836

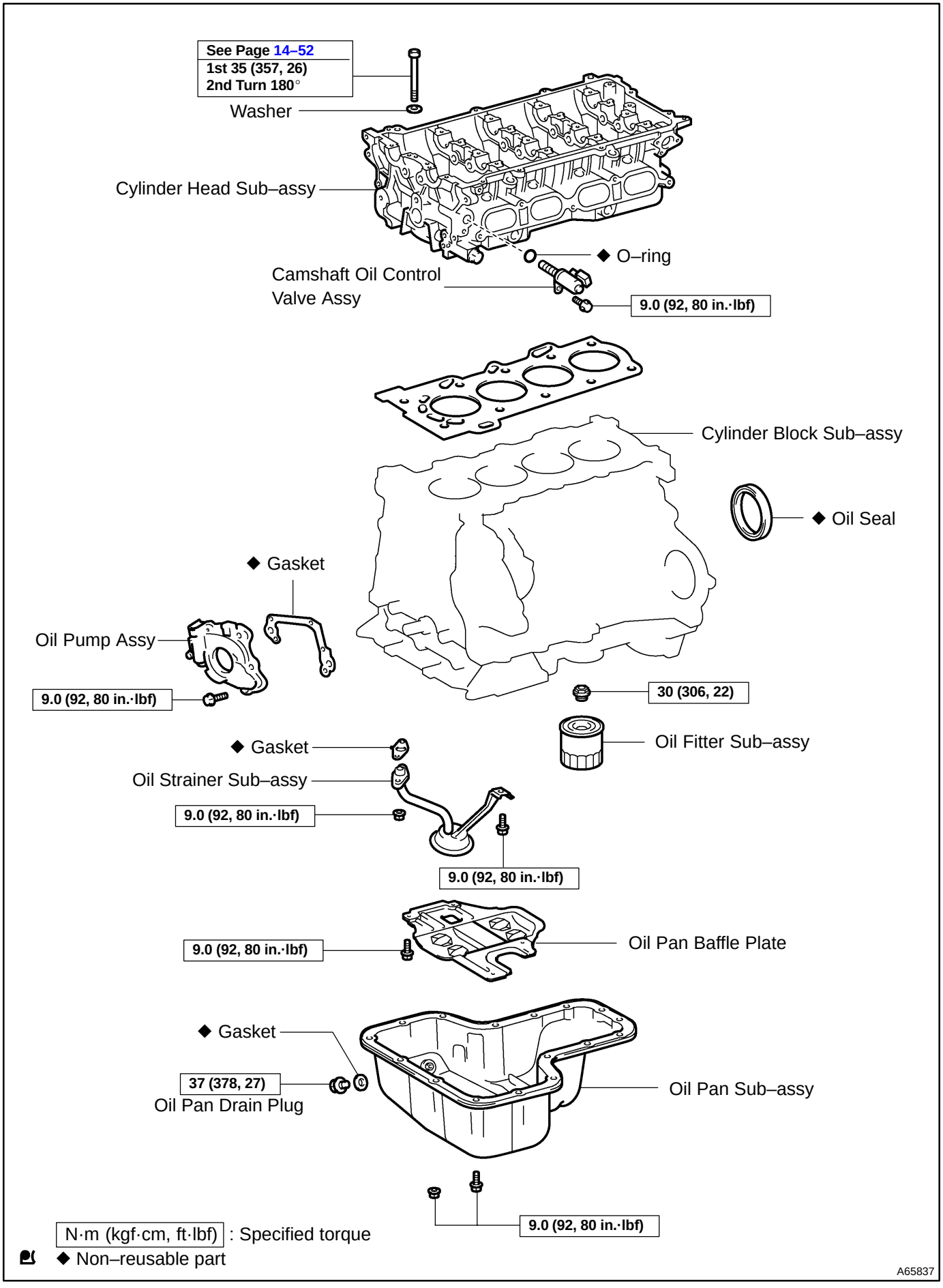
See Page 14–52
1st 35 (357, 26)
2nd Turn 180°
Washer
Cylinder Head Sub–assy
◆ O–ring
Camshaft Oil Control Valve Assy
9.0 (92, 80 in.·lbf)
Cylinder Block Sub–assy
◆ Oil Seal
◆ Gasket
Oil Pump Assy
9.0 (92, 80 in.·lbf)
30 (306, 22)
Oil Fitter Sub–assy
◆ Gasket
Oil Strainer Sub–assy
9.0 (92, 80 in.·lbf)
9.0 (92, 80 in.·lbf)
9.0 (92, 80 in.·lbf)
Oil Pan Baffle Plate
◆ Gasket
37 (378, 27)
Oil Pan Drain Plug
Oil Pan Sub–assy
9.0 (92, 80 in.·lbf)
N·m (kgf·cm, ft·lbf) : Specified torque
◆ Non–reusable part
A65837

140R9–01

OVERHAUL

1. REMOVE OIL FILLER CAP SUB–ASSY

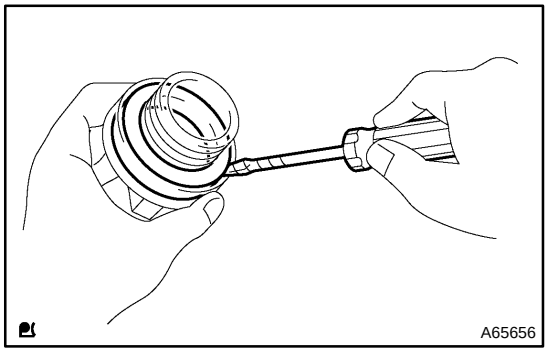

2. REMOVE OIL FILLER CAP GASKET

(a) Using a screwdriver, remove the gasket from the oil filter cap.

3. REMOVE VENTILATION VALVE SUB–ASSY

4. REMOVE SPARK PLUG

5. REMOVE CYLINDER HEAD COVER SUB–ASSY

(a) Remove the 9 bolts and cylinder head cover.

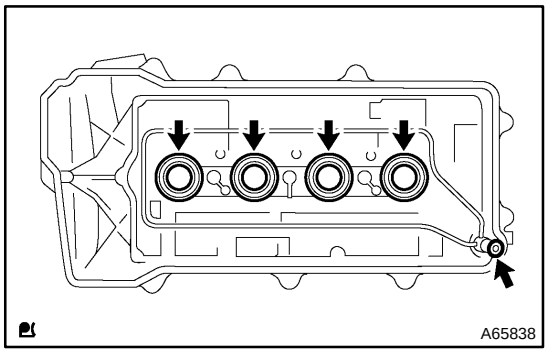

(b) Remove the spark plug tube gasket and O–ring.

6. REMOVE CYLINDER HEAD COVER GASKET

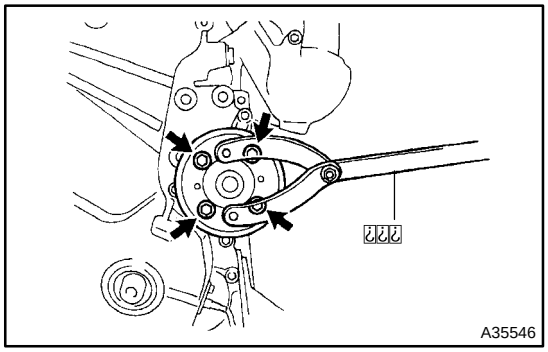

7. REMOVE WATER PUMP PULLEY

(a) Using SST, remove the water pump pulley
SST 09960–10010 (09962–01000, 09963–00600)

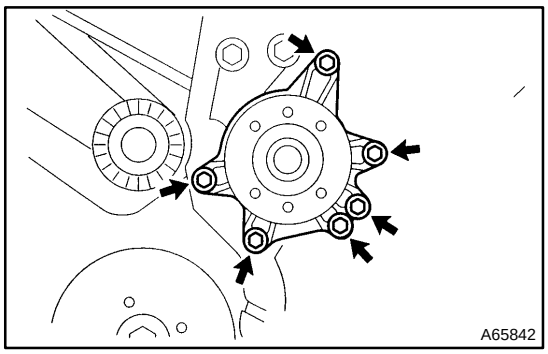

8. REMOVE WATER PUMP ASSY

(a) remove the 6 bolts, water pump and O–ring.

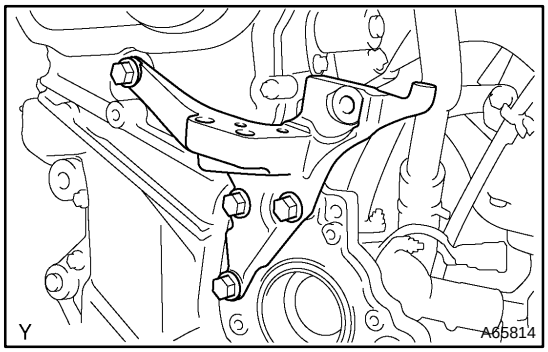

9. REMOVE TRANSVERSE ENGINE ENGINE MOUNTING BRACKET

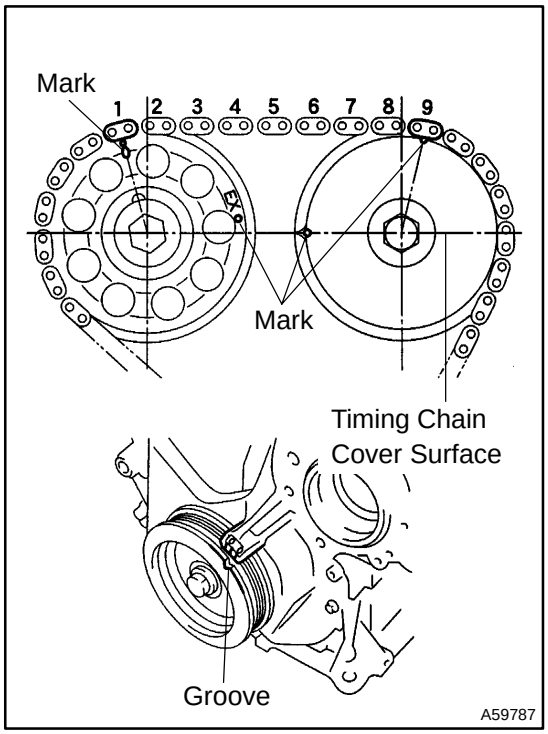

10. REMOVE CRANKSHAFT PULLEY

(a) Set No. 1 cylinder to TDC/compression.

(1) Turn the crankshaft pulley, and align its groove with timing mark ”0” of the timing chain cover.

(2) Check that the point marks of the camshaft timing sprocket and VVT timing sprocket are in straight line on the timing chain cover surface as shown in the illustration.

HINT:

If not, turn the crankshaft 1 revolution (360°) and align the marks as above.

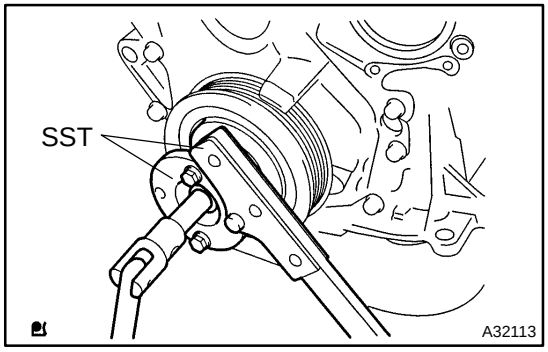

(b) Using SST, remove the pulley bolt.

SST 09213–70011 (09213–70020), 09330–00021

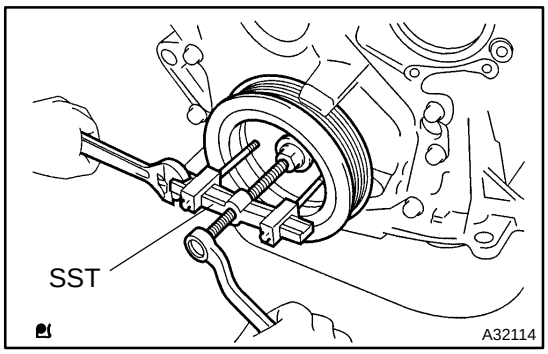

(c) Using SST, remove the crankshaft pulley.
SST 09950–50013 (09951–05010, 09952–05010, 09953–05020, 09954–05021)

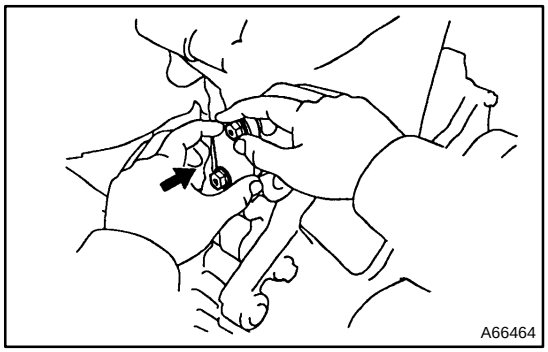

11. REMOVE CHAIN TENSIONER ASSY NO.1

(a) Remove the 2 nuts and chain tensioner.

NOTICE:

Be sure not to revolve the crank shaft without the chain tensioner.

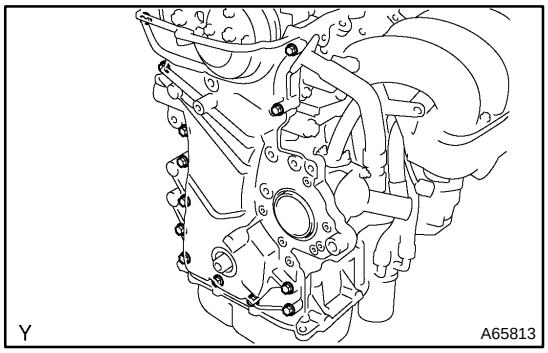

12. REMOVE TIMING CHAIN OR BELT COVER SUB–ASSY

(a) Remove the 13 bolts.

(b) Remove the stud bolt.

NOTICE:

Be careful not to damage the contact surfaces of the timing chain cover, cylinder head and cylinder block.

13. REMOVE TIMING GEAR (OR CHAIN) COVER GASKET

14. REMOVE TIMING CHAIN COVER GASKET NO.2

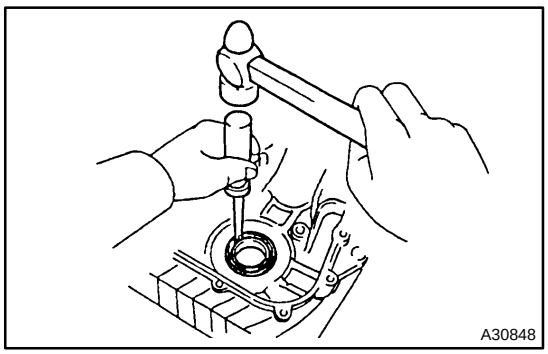

15. REMOVE TIMING GEAR COVER OIL SEAL

(a) Using a screwdriver, remove the oil seal.

16. REMOVE CHAIN TENSIONER SLIPPER

(a) Remove the bolt and chain tensioner slipper.

17. REMOVE CHAIN VIBRATION DAMPER NO.1

(a) Remove the 2 bolts and chain vibration damper No.1.

18. REMOVE CRANKSHAFT POSITION SENSOR PLATE NO.1

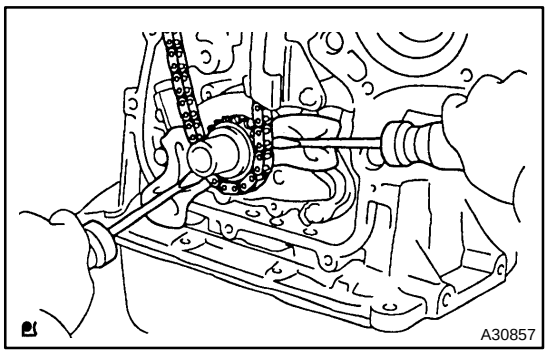

19. REMOVE CHAIN SUB–ASSY

(a) Using screwdrivers, ply out the timing chain with the crankshaft timing gear as shown in the illustration.

NOTICE:

- **Put shop rag to protect the engine.**
- **In case of revolving the camshafts with the chain off the sprockets, turn the crankshaft 1/4 revolution for valves not to touch the pistons.**

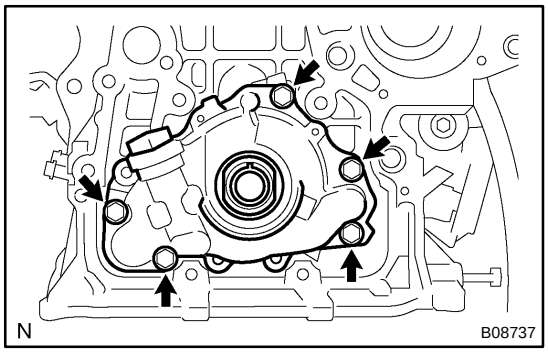

20. REMOVE OIL PUMP ASSY

(a) Remove the 5 bolts and oil pump.

21. REMOVE OIL PUMP GASKET

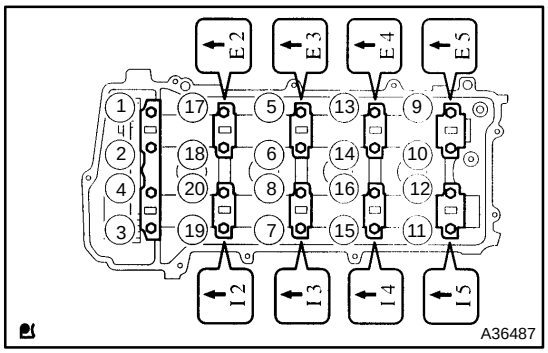

22. REMOVE CAMSHAFT

(a) Uniformly loosen and remove the 20 bearing cap bolts, in several passes, in the sequence shown, and remove the 9 bearing caps, intake and exhaust camshafts.

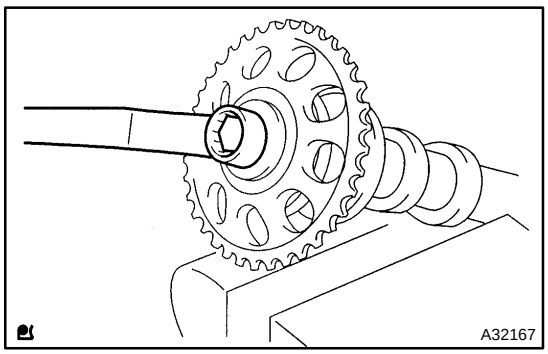

23. REMOVE CAMSHAFT TIMING GEAR OR SPROCKET

(a) Grip the camshaft No.2 with a vice, and remove the camshaft timing gear.

NOTICE:

Be careful not to damage the camshaft.

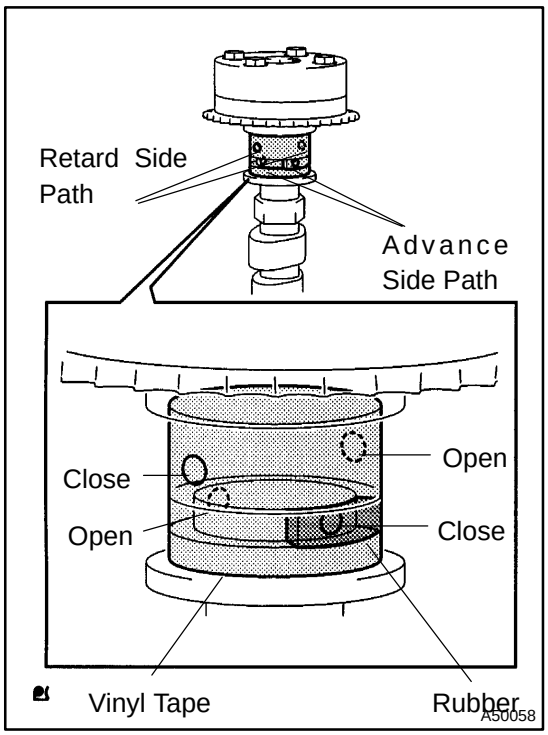

24. INSPECT CAMSHAFT TIMING GEAR ASSY

(a) Check the lock of camshaft timing gear.

(1) Grip the camshaft with a vice, and confirm the camshaft timing gear is locked.

NOTICE:

Be careful not to damage the camshaft.

(b) Release lock pin.

(1) Cover 4 oil paths of cam journal with vinyl tape as shown in the illustration.

HINT:

Two advance side paths are provided in the groove of the camshaft. Plug one of the path with a rubber piece.

(2) Break through the tapes of the advance side path and the retard side path on the opposite side of the groove.

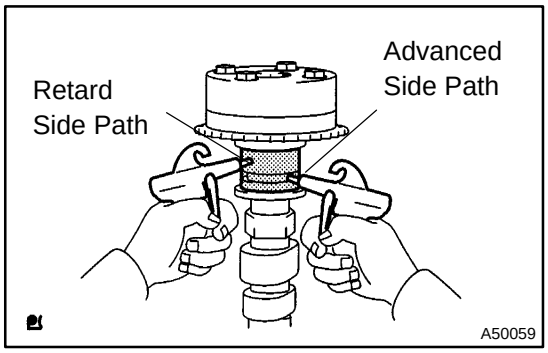

(3) Put air pressure into two broken paths (the advance side path and the retard side path) with about 150 kPa {1.5 kgf/cm^2}.

CAUTION:

Cover the paths with shop rag to avoid oil splashing.

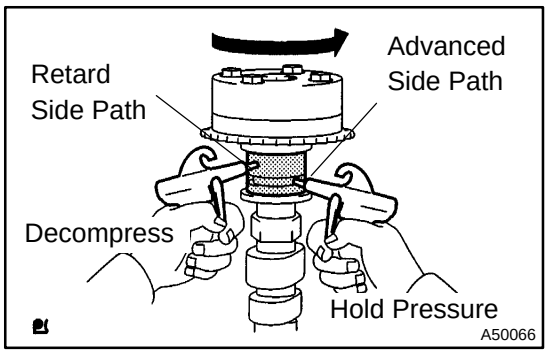

(4) Confirm if the camshaft timing gear assembly revolves in the timing advance direction when weakening the air pressure of the timing retard path.

HINT:

The lock pin is released, and camshaft timing gear, revolves in the advance direction.

(5) When the camshaft timing gear comes to the most advanced position, take out the air pressure of the timing retard side path, and then, take out that of timing advance side path.

CAUTION:

Camshaft timing assembly gear occasionally shifts to the retard side abruptly, if the air compression of the advanced side path is released before retard side path. It often causes the breakage of the lock pin.

(c) Check smooth revolution
  (1) Revolve the camshaft timing gear assembly within the movable range except for the most retarded position several times, and check the smooth revolution.

CAUTION:
Be sure to perform this check by hand, instead of air pressure.

(d) Check the lock in the most retarded position.
  (1) Confirm that the camshaft timing gear assembly is locked at the most retarded position.

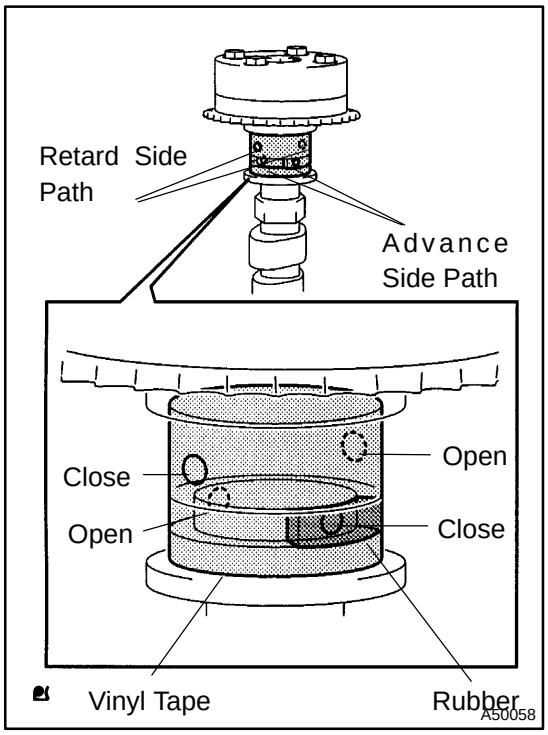

25. REMOVE CAMSHAFT TIMING GEAR ASSY

(a) Grip the camshaft with a vice, and confirm that the gear is locked.

CAUTION:
Be careful not to damage the camshaft.

(b) Cover 4 oil paths of cam journal with vinyl tape as shown in the illustration.

HINT:
Two advance side paths are provided in the groove of the camshaft. Plug one of the path with a rubber piece.

(c) Break through the tapes of the advance side path and the retard side path on the opposite side of the groove.

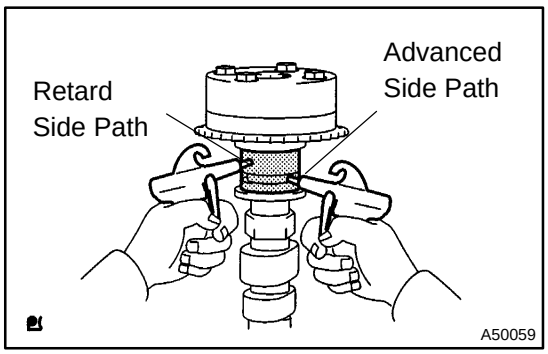

(d) Put air pressure into two broken paths (the advance side path and the retard side path) with about 150 kPa {1.5 kgf/cm^2}.

CAUTION:
Cover the paths with shop rag to avoid oil splashing.

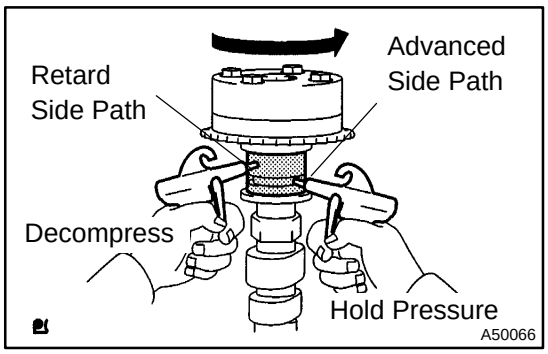

(e) Confirm if the camshaft timing gear assembly revolves in the timing advance direction when weakening the air pressure of the timing retard path.

HINT:

The lock pin is released, and camshaft timing gear revolves in the advance direction.

(f) When the camshaft timing gear comes to the most advanced position, take out the air pressure of the timing retard side path, and then, takeout that of timing advance side path.

CAUTION:

Camshaft timing gear assembly occasionally shifts to the retard side abruptly, if the air compression of the advanced side path is released before retard side paths. It often causes the breakage of the lock pin.

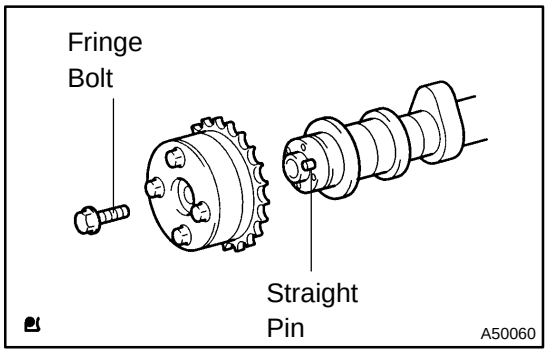

(g) Remove the fringe bolt of camshaft timing gear assembly.

NOTICE:

- **Be sure not to remove the other 4 bolts.**
- **In case of reusing the camshaft timing gear, release the strait pin locking first, and then install the gear.**

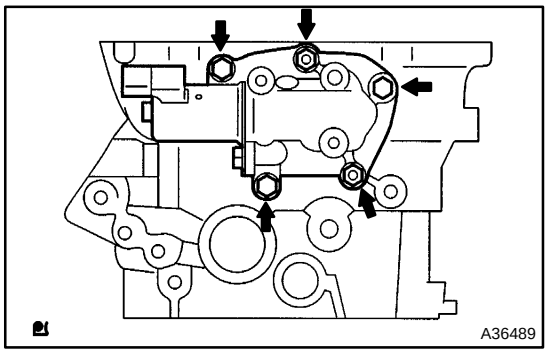

26. REMOVE CAM TIMING CONTROL VALVE HOUSING

(a) Remove the 3 bolts, 2 nuts and cam timing oil control valve housing.

27. REMOVE CAM TIMING OIL CONTROL VALVE HOUSING GASKET

28. REMOVE CAMSHAFT TIMING OIL CONTROL VALVE ASSY

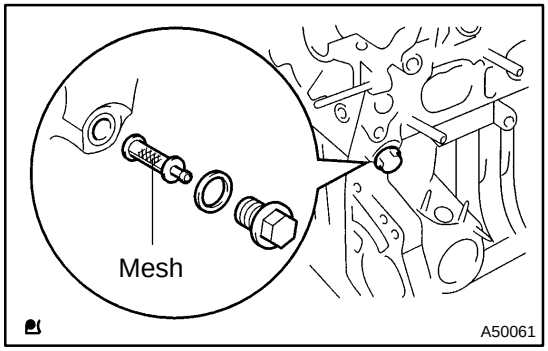

29. REMOVE OIL CONTROL VALVE FILTER

(a) Remove the plug and oil control valve filter.(Front side)

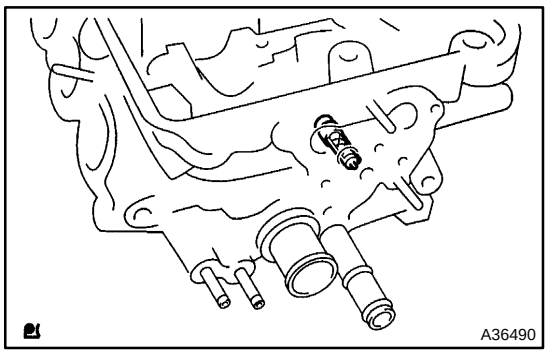

(b) Remove the oil control valve filter.(Rear side)

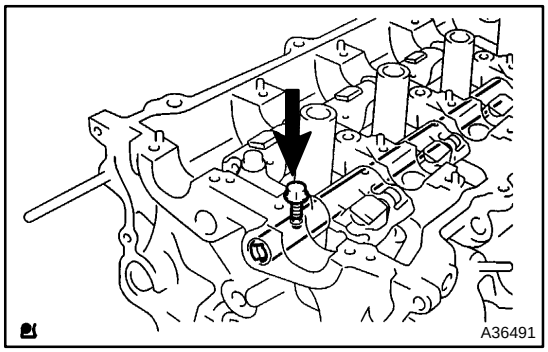

30. REMOVE VALVE ROCKER SHAFT SUB–ASSY NO.1

(a) Remove the bolt and the rocker shaft No.1.

(b) Remove the valve rocker arm.

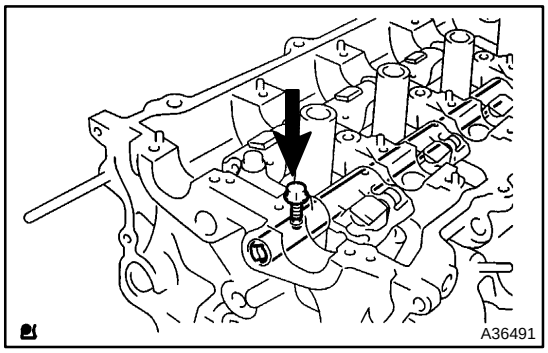

31. REMOVE VALVE ROCKER SHAFT SUB–ASSY NO.2

(a) Remove the bolt and the rocker shaft No.2.

(b) Remove the valve rocker arm.

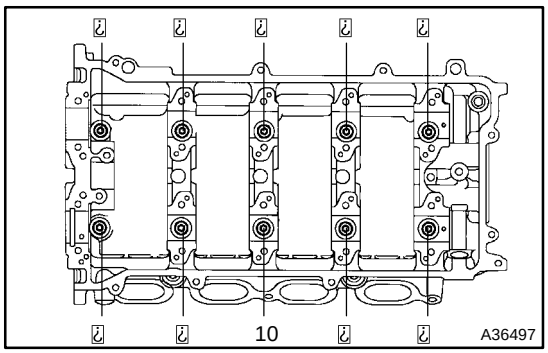

32. REMOVE CYLINDER HEAD SUB–ASSY

(a) Using a 10 mm bi–hexagon wrench, uniformly loosen an remove the 10 cylinder head bolts, in several passes, in the sequence shown. Remove the 10 cylinder head bolts and plate washers.

NOTICE:

- **Be careful not to drop washers into the cylinder head.**
- **Head warpage or cracking could result from removing bolts in an incorrect order.**

33. REMOVE CYLINDER HEAD GASKET

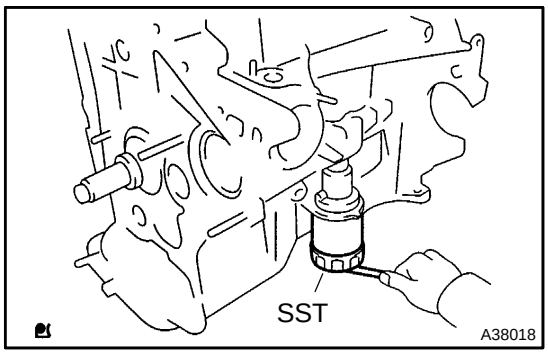

34. REMOVE OIL FILTER SUB–ASSY

(a) Using SST, remove the oil filter.
SST 09228–06501

35. REMOVE OIL FILTER UNION

(a) Using a 12 mm socket hexagon wrench,remove the oil filter union.

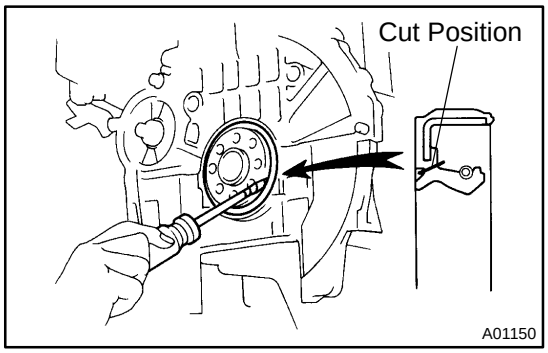

36. REMOVE ENGINE REAR OIL SEAL

(a) Using a knife, cut off the oil seal lip.

(b) Using a screwdriver with its tip taped, pry out the oil seal.

NOTICE:

After the removal, check if the crankshaft is not damaged. If there is, mend it with a sandpaper (# 400).

37. REMOVE OIL PAN DRAIN PLUG

38. REMOVE OIL PAN DRAIN PLUG GASKET

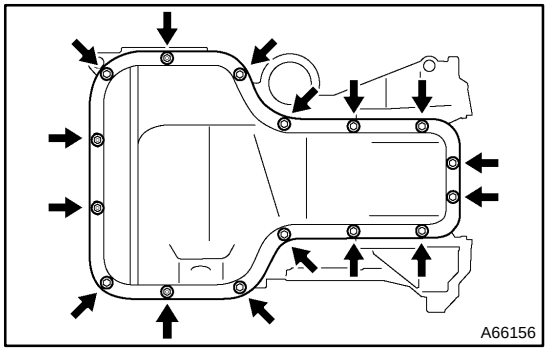

39. REMOVE OIL PAN SUB–ASSY

(a) Remove the 12 bolts and 4 nuts.

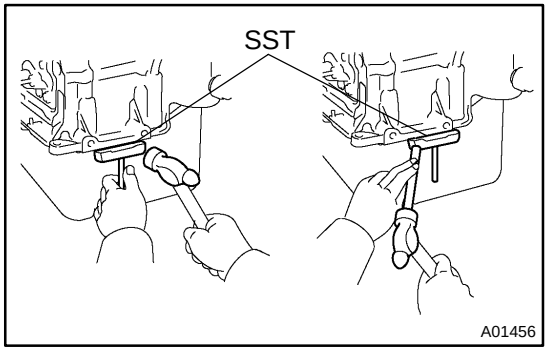

(b) Insert the blade of SST between the bearing cap sub–assembly and oil pan, and cut off applied sealer and remove the oil pan.
SST 09032–00100

NOTICE:

Be careful not to damage the oil pan contact surface of the bearing cap sub–assembly and the oil pan flange.

40. REMOVE OIL STRAINER SUB–ASSY

41. REMOVE OIL STRAINER FLANGE GASKET

42. REMOVE OIL PAN BAFFLE PLATE

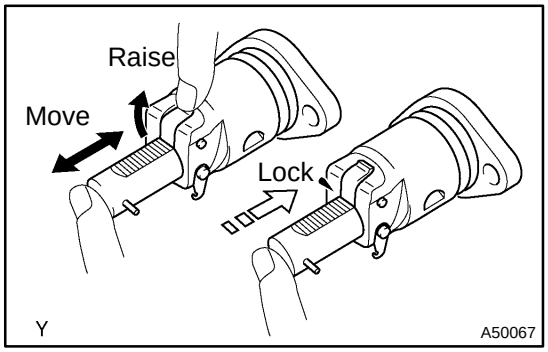

43. INSPECT CHAIN TENSIONER ASSY NO.1

(a) Check that the plunger moves smoothly when the ratchet pawl is raised with your finger.

(b) Release the ratchet pawl and check that the plunger is locked in place by the ratchet pawl and does not move when pushed with your finger.

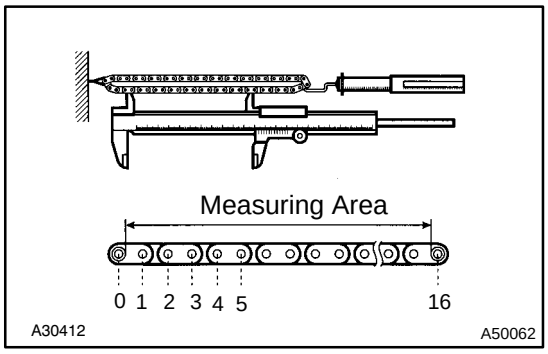

44. INSPECT CHAIN SUB–ASSY

(a) Using a spring scale, pull the timing chain with 140 N (4.3 kgf, 315 lb) and measure the length of it.

Maximum chain elongation : 122.6 mm (4.827 in.)

(b) If the elongation is greater than maximum, replace the chain.

HINT:

Make the same measurements pulling at 3 or more places selected at random.

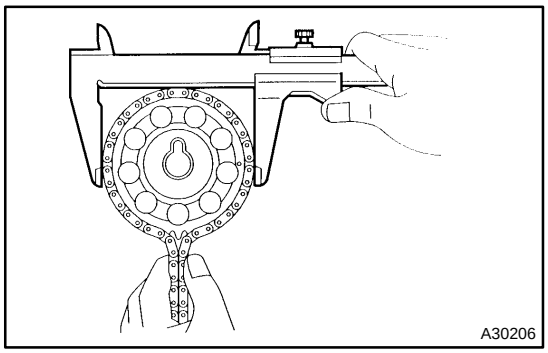

45. INSPECT CAMSHAFT TIMING GEAR OR SPROCKET

(a) Wrap the chain around the timing sprocket.

(b) Using a vernier calipers, measure the timing sprocket diameter with the chain.

Minimum sprocket diameter (w / chain):
97.3mm (3.831 in.)

NOTICE:

Vernier calipers must contact the chain rollers for measuring.

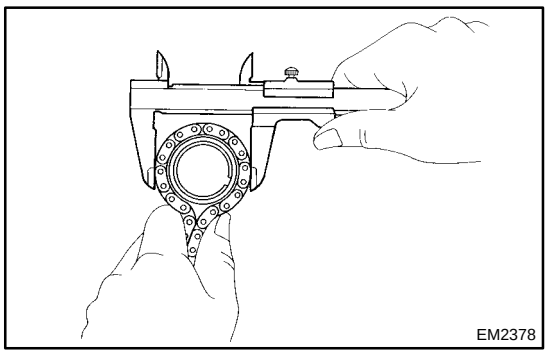

46. INSPECT CRANKSHAFT TIMING GEAR OR SPROCKET

(a) Wrap the chain around the timing sprocket.

(b) Using a vernier calipers, measure the timing sprocket diameter with the chain.

NOTICE:

Vernier calipers must contact the chain rollers for the measuring.

Minimum sprocket diameter (w / chain):
51.6mm (2.031in.)

If the diameter is less than minimum, replace the chain and sprockets.

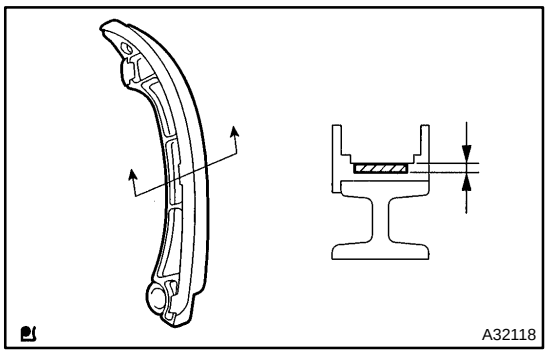

47. INSPECT CHAIN TENSIONER SLIPPER

(a) Measure the chain tensioner slipper wears.
Maximum wear: 1.0 mm (0.039 in.)

(b) If the wear is greater than maximum, replace the slipper.

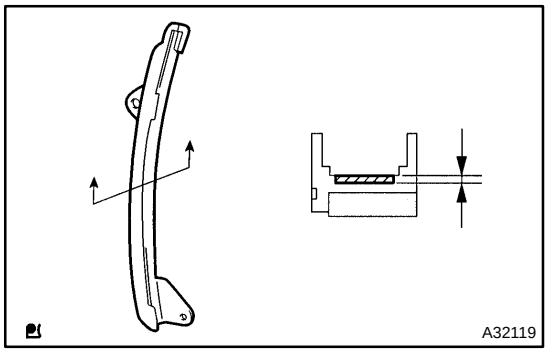

48. INSPECT CHAIN VIBRATION DAMPER NO.1

(a) Measure the vibration damper wears.
Maximum wear: 1.0 mm (0.039 in.)

(b) If the wear is greater than maximum, replace the damper.

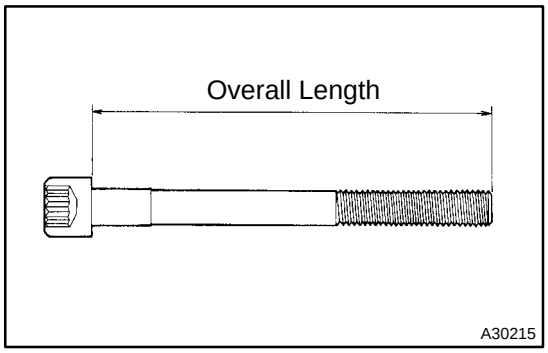

49. INSPECT CYLINDER HEAD BOLT

(a) Using vernier calipers, measure the length of head bolts from the seat to the end.
Standard bolt length:
146.8 – 148.2 mm (5.780–5.835 in.)
Maximum bolt length: 148.5 mm(5.846 in.)

(b) If the length surpasses the maximum, replace the bolt.

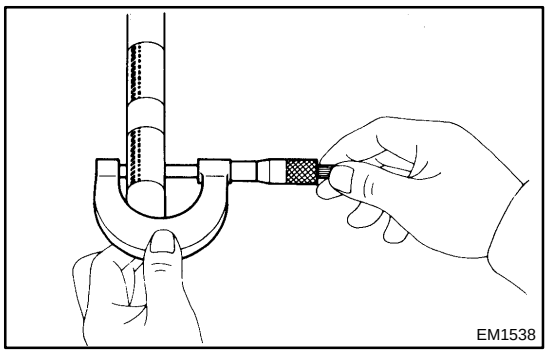

50. INSPECT VALVE ROCKER SHAFT SUB–ASSY NO.1

(a) Using a micrometer, measure the rocker No.1 shaft diameter.
Standard : 15.965 – 15.985 mm (0.6285 – 0.6293 in)

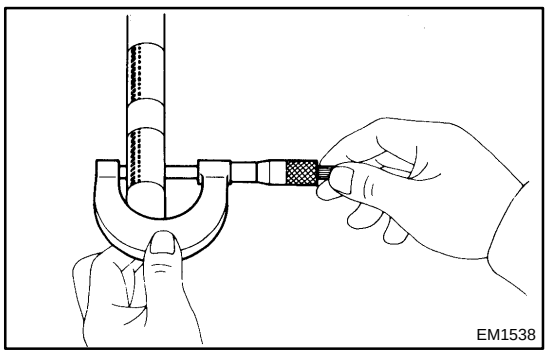

51. INSPECT VALVE ROCKER SHAFT SUB–ASSY NO.2

(a) Using a micrometer, measure the rocker No.2 shaft diameter.
Standard : 15.965 – 15.985 mm (0.6285 – 0.6293 in)

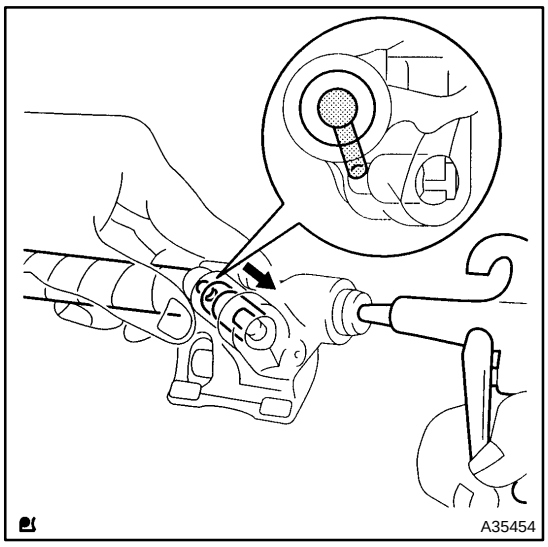

52. INSPECT VALVE ROCKER ARM

(a) Cover oil paths of the rocker arm shaft except 2 paths with vinyl type.

(b) Align the oil path of the rocker arm shaft to the oil path of the rocker arm.

(c) Check that the posfon inside of the rocker arm noves when air pressure 150 kpa {1.5kgf/cm^2 } is put to the oil paths.

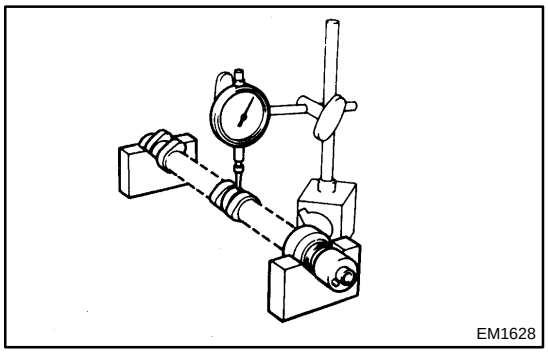

53. INSPECT CAMSHAFT

(a) Inspect camshaft for runout.

(1) Place the camshaft on V–blocks.

(2) Using a dial indicator, measure the circle runout at the center journal.

Maximum circle runout: 0.03 mm (0.0012 in.)

(b) If the circle runout is greater than maximum, replace the camshaft.

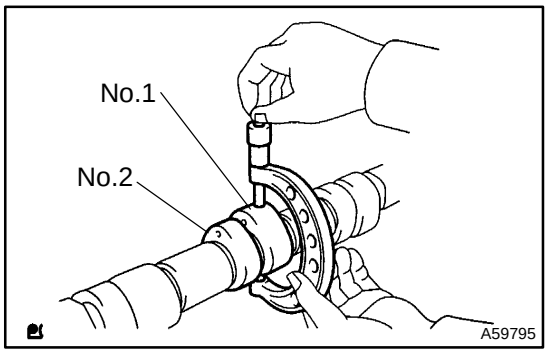

(c) Inspect cam lobes.

(1) Using a micrometer, measure the cam lobe height.

Standard cam lobe height:
No.1: 40.607 – 40.707 mm (1.5987 – 1.6026 in.)
No.2: 38.769 – 38.869 mm (1.5236 – 1.5303 in.)
Minimum cam lobe height:
No.1: 40.45 mm (1.5925 in.)
No.2: 38.61 mm (1.5201 in.)

(2) If the cam lobe height is less than minimum, replace the camshaft.

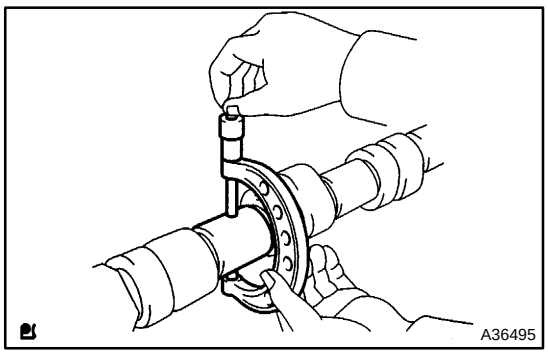

(d) Inspect camshaft journals.

(1) Using a micrometer, measure the journal diameter.

No. 1 journal diameter:
34.449 – 34.465 mm (1.3563 – 1.3569 in.)
Others journal diameter:
27.949 – 27.965 mm (1.1004 – 1.1010 in.)

(2) If the journal diameter is not as specified, check the oil clearance.

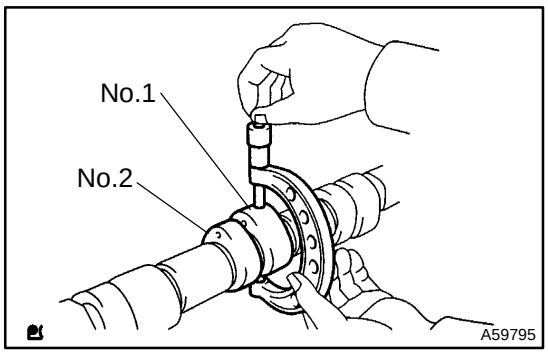

54. INSPECT NO.2 CAMSHAFT

(a) Inspect cam lobes.

(1) Using a micrometer, measure the cam lobe height.

Standard cam lobe height:
No.1: 40.019 – 40.119 mm (1.5756 – 1.5795 in.)
No.2: 38.863 – 38.963 mm (1.5300 – 1.5340 in.)
Minimum cam lobe height:
No.1: 39.86 mm (1.5693 in.)
No.2: 38.71 mm (1.5240 in.)

(2) If the cam lobe height is less than minimum, replace the camshaft.

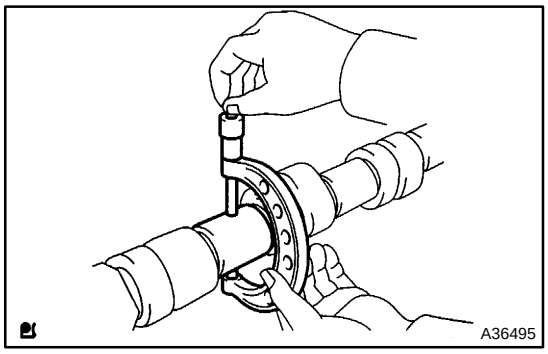

(b) Inspect camshaft journals.

(1) Using a micrometer, measure the journal diameter.

No. 1 journal diameter:
34.449 – 34.465 mm (1.3563 – 1.3569 in.)
Others journal diameter:
27.949 – 27.965 mm (1.1004 – 1.1010 in.)

(2) If the journal diameter is not as specified, check the oil clearance.

55. INSTALL OIL PAN BAFFLE PLATE

(a) Install the oil pan baffle plate with the 2 bolts and 2 nuts.
Torque: 9.0 N·m (92 kgf·cm, 80 in.·lbf)

56. INSTALL OIL STRAINER SUB–ASSY

(a) Install a new gasket and the oil strainer with the 2 nuts and a bolt.
Torque: 9.0 N·m (92 kgf·cm, 80 in.·lbf)

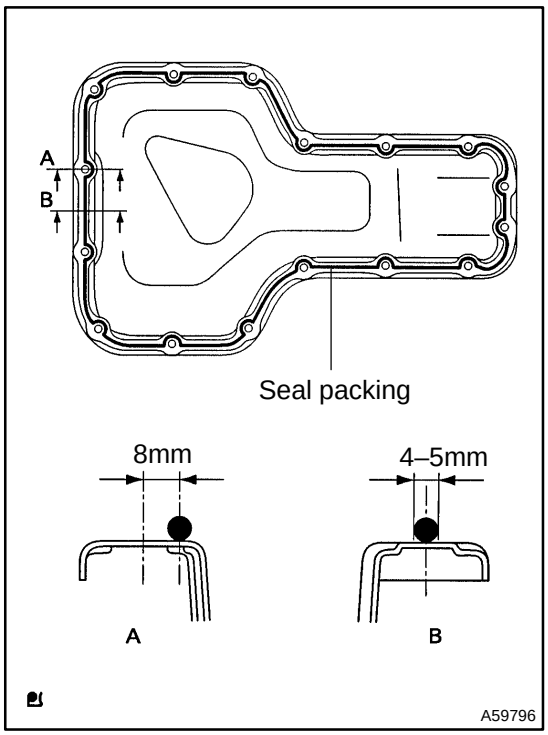

57. INSTALL OIL PAN SUB–ASSY

(a) Remove any old packing material from the contact surface.

(b) Apply seal packing in the shape of bead (Diameter 3.5 mm – 4.5 mm(0.1379 – 0.177in)) consequently as shown in the illustration.

Seal packing: Part No. 08826–00080 or equivalent

NOTICE:

- **Remove any oil from the contact surface.**
- **Install the oil pan within 3 minutes after applying seal packing.**
- **Do not put into engine oil within 2 hours after installing.**

(c) Install the oil pan with the 12 bolts and 2 nuts.

Torque: 9.0 N·m (92 kgf·cm, 80 in.·lbf)

58. INSTALL OIL PAN DRAIN PLUG

(a) Place a new gasket on the drain plug and install the oil pan drain plug.

Torque: 37 N·m (378 kgf·cm, 27 ft·lbf)

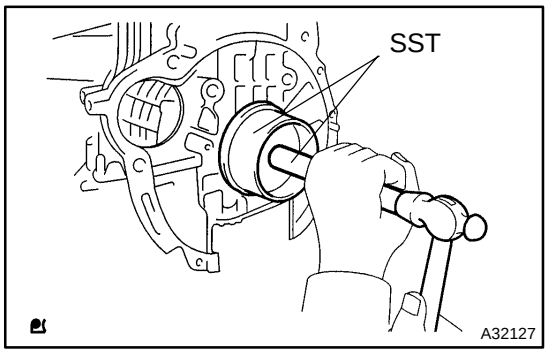

59. INSTALL ENGINE REAR OIL SEAL

(a) Apply MP grease to a new oil seal lip.

NOTICE:

Keep the lip off foreign materials.

(b) Using SST and a hammer, tap in the oil seal until its surface is flush with the rear oil seal retainer edge.

SST 09223–15030, 09950–70010 (09951–07100)

NOTICE:

Wipe off extra grease on the crank shaft.

60. INSTALL OIL FILTER UNION

(a) Using a 12 mm socket hexagon wrench, install the oil filter union.

Torque: 30 N·m (306 kgf·cm, 22 ft·lbf)

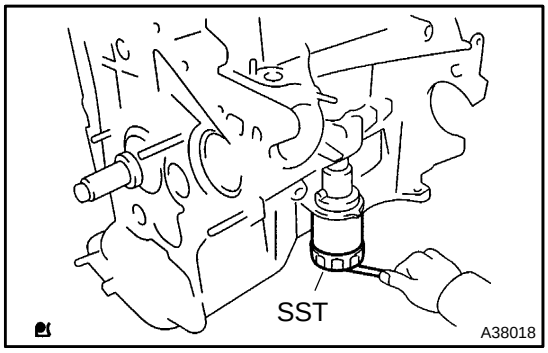

61. INSTALL OIL FILTER SUB–ASSY

(a) Check and clean the oil filter installation surface.

(b) Apply clean engine oil to the gasket of a new oil filter.

(c) Lightly screw the oil filter into place, and tighten it until the gasket contacts the seat.

(d) Using SST, tighten it an additional 3/4 turn.

SST 09228–06501

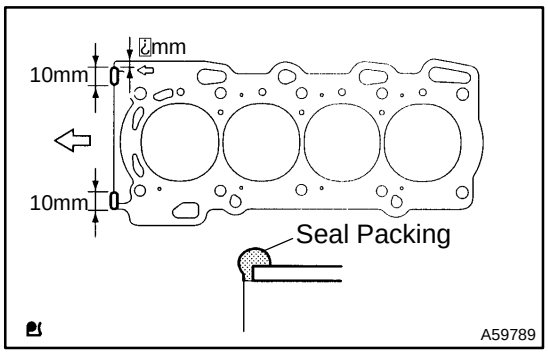

62. INSTALL CYLINDER HEAD GASKET

(a) Place a new cylinder head gasket on the cylinder block surface with the Lot No. stamp upward.

NOTICE:

- **Pay attention to the installation direction.**
- **Place the cylinder head quietly in order not to damage the gasket with the bottom part of the head.**

(b) Apply seal packing to the cylinder head gasket as shown in the illustration.

Seal packing:

Part No. 08826–00080 or equivalent

HINT:

avoid applying an excessive amount to the surface.

- Parts must be assembled with in 3 minutes of application. Otherwise the material must be removed and repplied.
- Immediately remove nozzle from the tube and reinstall cap.

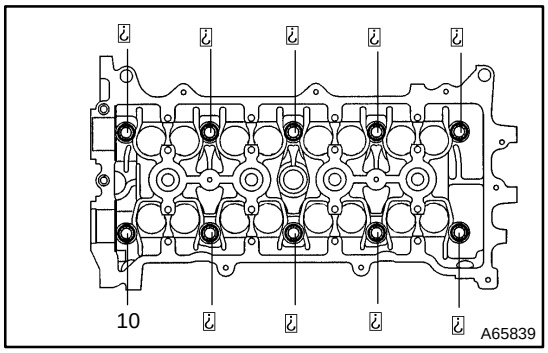

63. INSTALL CYLINDER HEAD SUB–ASSY

HINT:

The cylinder head bolts are tightened in 2 progressive steps.

(a) Apply a light coat of engine oil on the threads and under the heads of the cylinder head bolts.

(b) Using a 10 mm bi–hexagon wrench, install and uniformly tighten the 10 cylinder head bolts with plate washers, in several passes, in the sequence shown.

Torque: 35 N·m (357 kgf·cm, 26 ft·lbf)

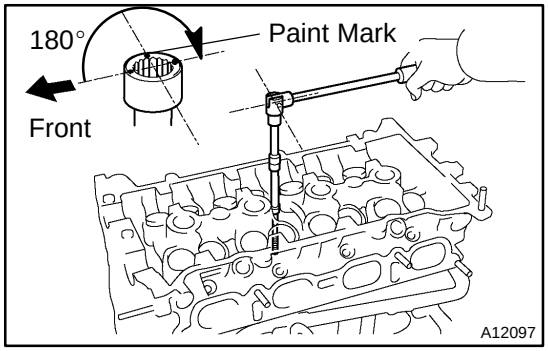

(c) Mark the front of the cylinder head bolt with paint.

(d) Retighten the cylinder head bolts 180 ° in the numerical order shown.

(e) Check that the point marked bolts are moved at 180 ° angle.

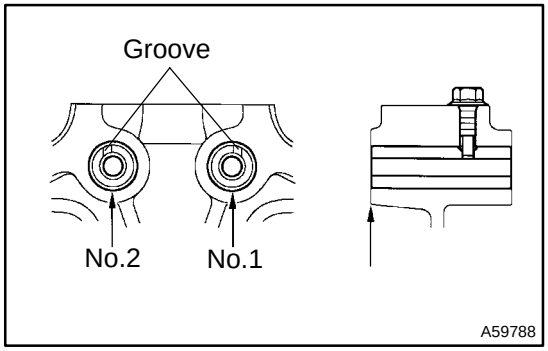

64. INSTALL VALVE ROCKER SHAFT SUB–ASSY NO.2

(a) Put the valve rocker shaft through the cylinder head and the hole of the valve rocker arm, and check the direction of the groove.

(b) Install a bolt to fix the rocker shaft No.2.

Torque: 9.0 N·m (92 kgf·cm 80 in.·lbf)

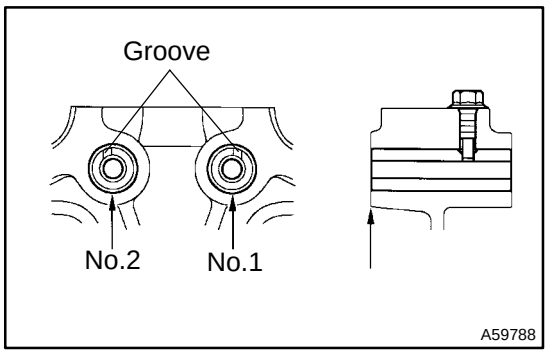

65. INSTALL VALVE ROCKER SHAFT SUB–ASSY NO.1

(a) Put the valve rocker shaft through the cylinder head and the hole of the valve rocker arm, and check the direction of the groove.

(b) Install a bolt to fix the rocker shaft No.1.
Torque: 9.0 N·m (92 kgf·cm 80 in.·lbf)

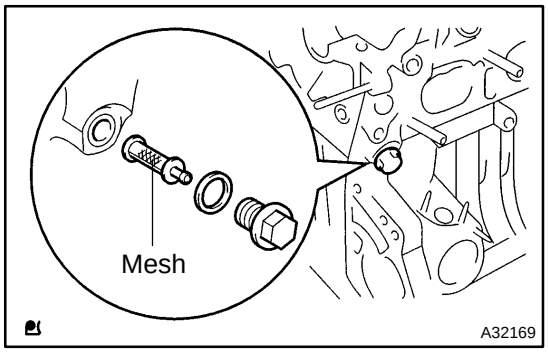

66. INSTALL OIL CONTROL VALVE FILTER

(a) Confirm that the filter is clear.

(b) Place a new gasket on the bolt and install the filter.(Front side)
Torque: 29 N·m (296 kgf·cm, 21 ft·lbf)

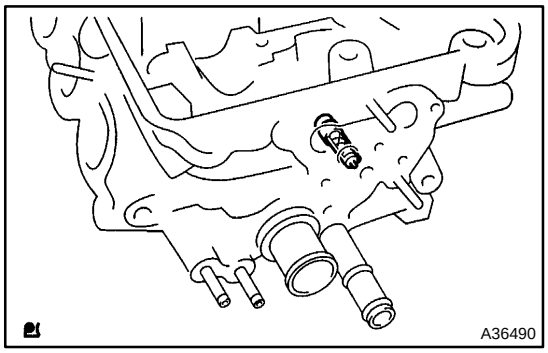

(c) Install the oil control valve filter from the cylinder head.(Rear side)

67. INSTALL CAMSHAFT TIMING OIL CONTROL VALVE ASSY
Torque: 9.0 N·m (92 kgf·cm 80 in.·lbf)

68. INSTALL CAM TIMING CONTROL VALVE HOUSING

(a) Install the cam timing control valve housing with a new gasket.
Torque: 9.0 N·m (92 kgf·cm 80 in.·lbf)

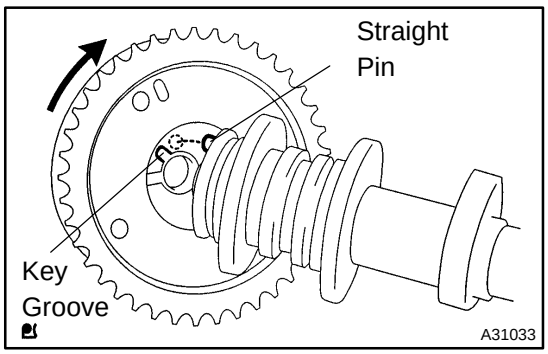

69. INSTALL CAMSHAFT TIMING GEAR ASSY

(a) Put the camshaft timing gear assembly and the camshaft together with the straight pin off the key groove.

(b) Turn the camshaft timing gear assembly to the left direction (as shown in the illustration) with pushing it lightly against the camshaft. Push further at the position where the pin gets into the groove.

CAUTION:
Be sure not to turn the camshaft timing gear to the retard angle side (to the right angle).

(c) Check that there is no clearance between the gear's fringe and the camshaft.

(d) Tighten the fringe bolt with the camshaft timing gear fixed.
Torque: 54 N·m (551 kgf·cm 40 ft·lbf)

(e) Check that the camshaft timing gear assembly can move to the retard angle side (the right angle), and is locked at the most retarded position.

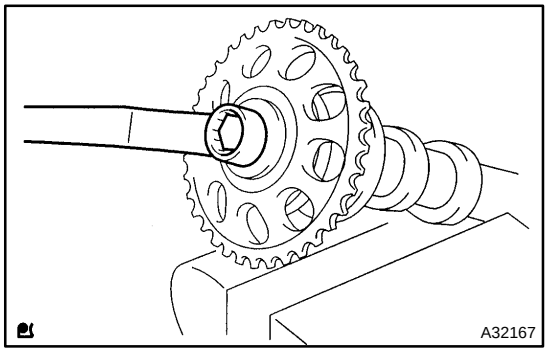

70. INSTALL CAMSHAFT TIMING GEAR OR SPROCKET

(a) Grip the camshaft with a vice, and install the camshaft timing gear.

Torque: 54 N·m (551 kgf·cm 40 ft·lbf)

NOTICE:

Be careful not to damage the camshaft.

71. INSTALL CAMSHAFT

(a) Apply light coat of engine oil on the camshaft journals.

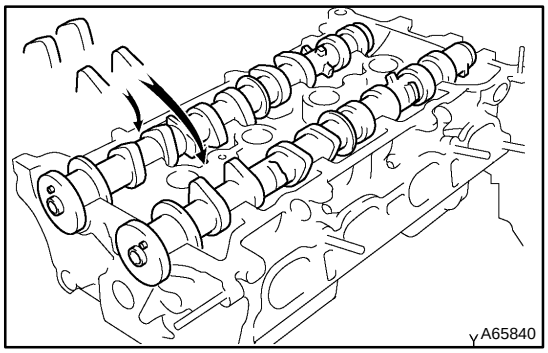

(b) Place the 2 camshafts on the cylinder head with the No. 1 cam lobes facing as shown the illustration.

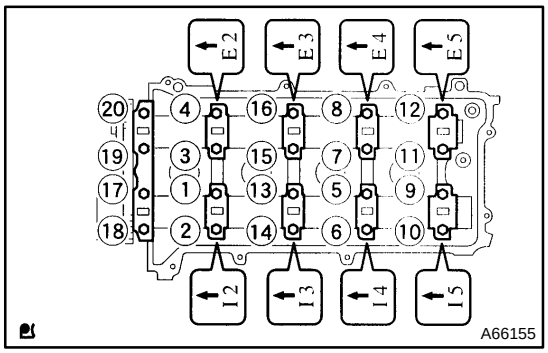

(c) Examine the front marks and numbers and tighten the bolts in the order shown in the illustration.

Torque: 19 N·m (194 kgf·cm, 14 ft·lbf)

72. INSTALL OIL PUMP GASKET

(a) Place a new gasket on the cylinder block.

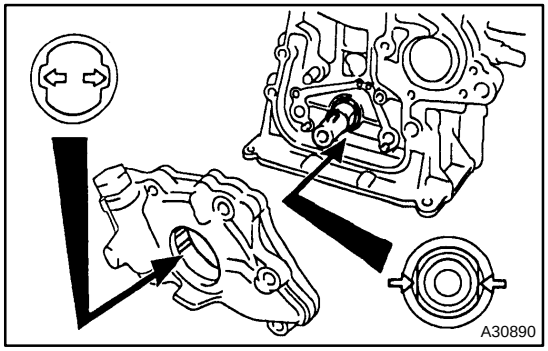

73. INSTALL OIL PUMP ASSY

(a) Engage the spline teeth of the oil pump drive rotor with the large teeth of the crankshaft, and side the oil pump.

(b) Install the oil pump with the 5 bolts.

Torque: 9.0 N·m (92 kgf·cm, 80 in.·lbf)

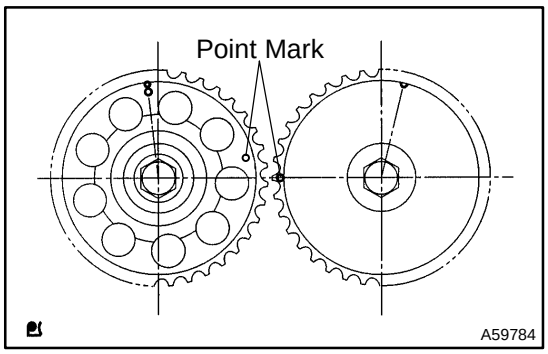

74. INSTALL CHAIN SUB–ASSY

(a) Set No. 1 cylinder to TDC/compression.

(1) Turn the hexagonal wrench head portion of the camshafts, and align the point marks of the camshaft timing sprockets.

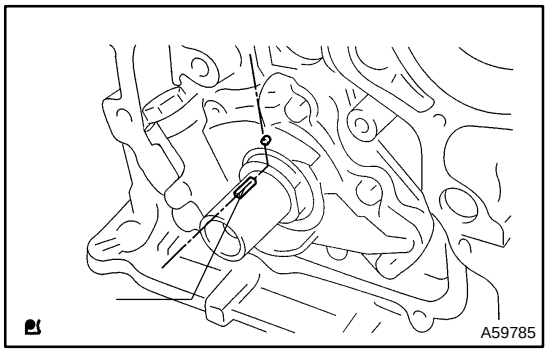

(2) Turn the crankshaft and set the set key on the crankshaft upward.

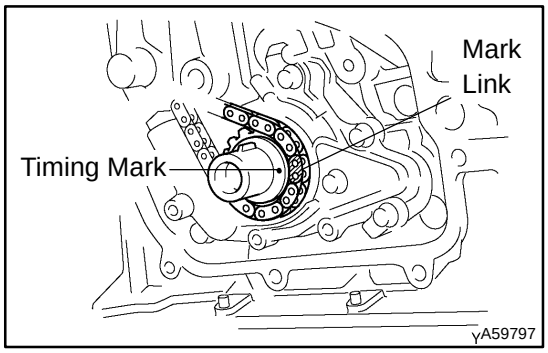

(b) Install the timing chain on the crankshaft timing sprocket with the mark link (yellow color link) aligned with the timing mark on the crankshaft timing sprocket.

HINT:

A yellow color link and 2 orange color links are on the chain.

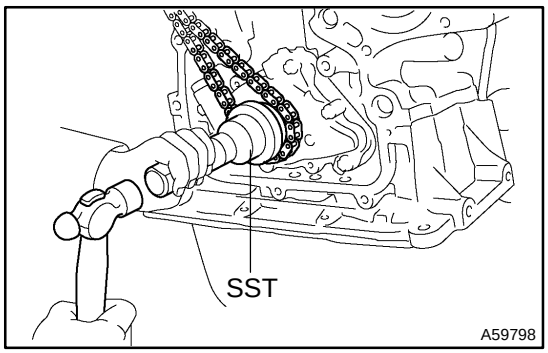

(c) Using a SST, install the sprocket.

SST 09223–22010

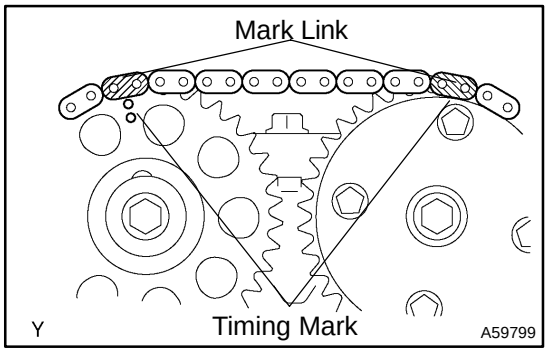

(d) Install the timing chain on the camshaft timing sprockets with the mark link (orange color links) aligned with the timing marks on the camshaft timing sprockets.

75. INSTALL CHAIN VIBRATION DAMPER NO.1

(a) Install the 2 bolts and the chain vibration damper No.1.
Torque: 21 N·m (214 kgf·cm, 15 ft·lbf)

76. INSTALL CHAIN TENSIONER SLIPPER

(a) Install the bolt and the chain tensioner slipper.
Torque: 21 N·m (214 kgf·cm, 15 ft·lbf)

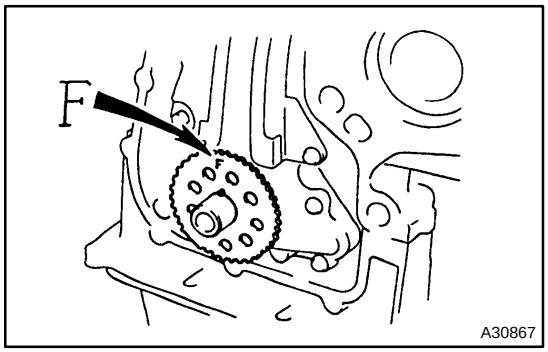

77. INSTALL CRANKSHAFT POSITION SENSOR PLATE NO.1

(a) Install the plate with the ”F” mark facing forward.

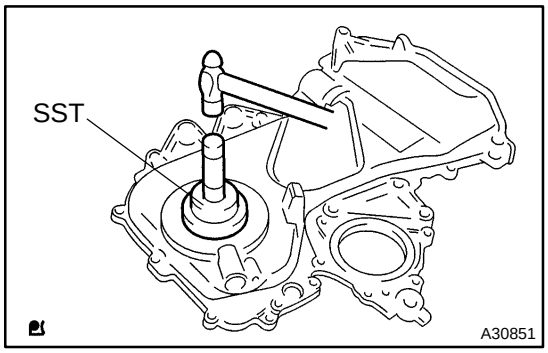

78. INSTALL TIMING GEAR COVER OIL SEAL

(a) Apply MP grease to the oil seal lip.
(b) Using SST and a hammer, tap in a new oil seal until its surface is flush with the timing chain cover edge.
SST 09223–22010

NOTICE:
Keep the lip off foreign materials.

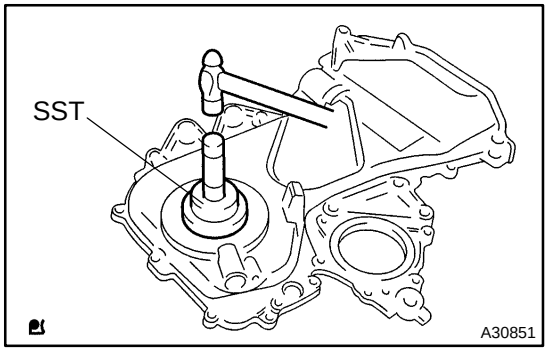

79. INSTALL TIMING CHAIN OR BELT COVER SUB–ASSY

(a) Remove any old packing (FIPG) material and be careful not to drop any oil on the contact surface of the timing chain cover, cylinder head and cylinder block.
- Using a razor blade and a gasket scraper, remove all the old packing (FIPG) material from the gasket surfaces and sealing grooves.
- Thoroughly clean all components to remove all the loose material.
- Using a non–residue solvent, clean both sealing surfaces.

(b) Apply seal packing to the timing chain cover as shown in the illustration.

Seal packing:

Part No. 08826–00100 or equivalent

- Install a nozzle that has been cut to a 1.5 mm opening.

HINT:

Avoid applying an excessive amount to the surface.

- Parts must be assembled within 3 minutes of application. Otherwise the material must be removed and reapplied.
- Immediately remove nozzle from the tube and reinstall cap.

(c) Install the 2 gaskets to the timing chain cover an shown in the illustration.

(d) Apply seal packing to 4 locations an shown in the illustration.

Seal packing:

Part No. 08826–00080 or equivalent

- Install a nozzle that has been cut to a 4 – 5 mm (0.16 – 0.20 in.)opening.

HINT:

Avoid applying an excessive amount to the surface.

- Parts must be assembled within 3 minutes of application. Otherwise the material must be removed and reapplied.
- Immediately remove nozzle from the tube and reinstall cap.

NOTICE:

- **Do not put into engine oil within 2 hours after installing.**

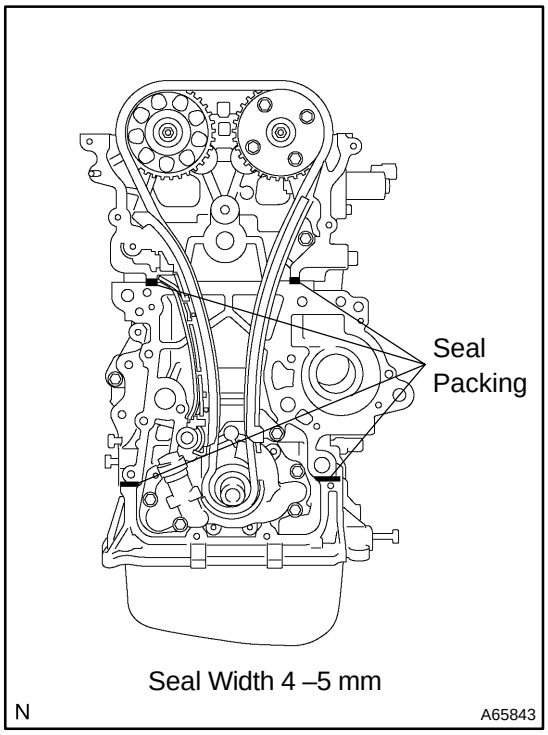

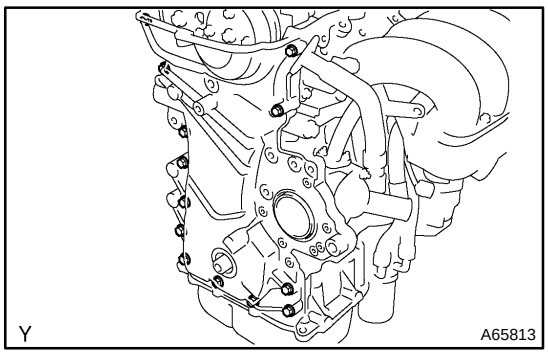

(e) Install the timing chain cover, with the 13 bolts.

Torque:

21 N·m (214 kgf·cm, 15 ft·lbf) (M8)

11 N·m (112 kgf·cm, 8 ft·lbf) (M6)

(f) Install the stud bolt.

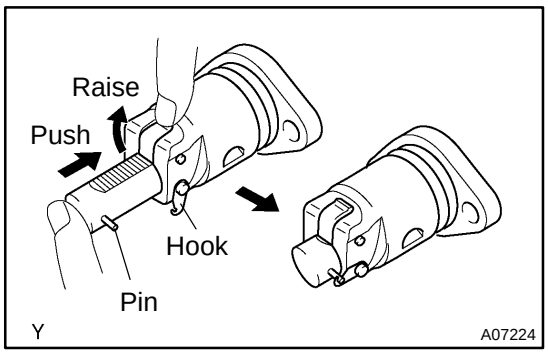

80. INSTALL CHAIN TENSIONER ASSY NO.1

(a) Check the O–ring is clean, and set the hook as shown in the illustration.

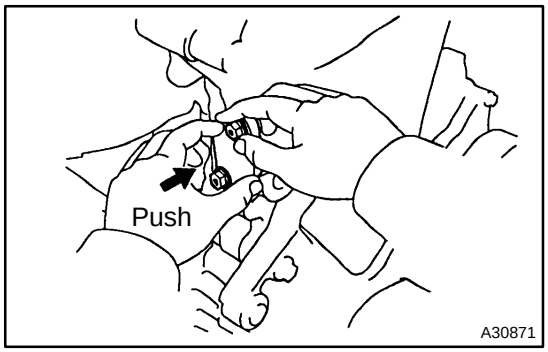

(b) Apply engine oil to the chain tensioner and install it.
Torque: 9.0 N·m (92 kgf·cm, 80 in.·lbf)

NOTICE:
When installing the tensioner, set the hook again if the hook releases the plunger.

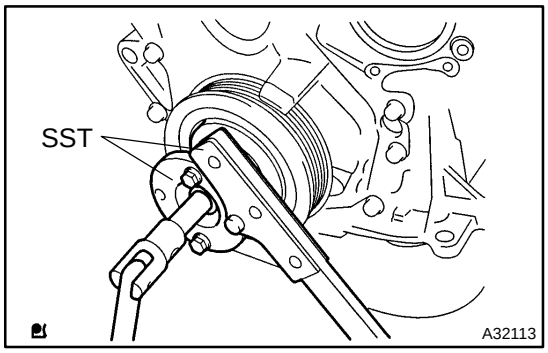

81. INSTALL CRANKSHAFT PULLEY

(a) Align the pulley set key with the key groove of the pulley, and slide on the pulley.

(b) Using SST, install the pulley bolt.
SST 09213–70011(09213 – 70020), 09330–00021
Torque: 118 N·m (1,203 kgf·cm, 87 ft·lbf)

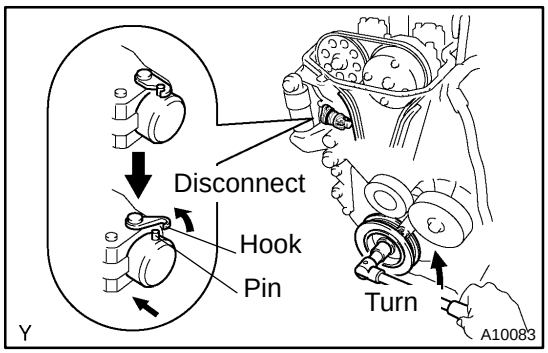

(c) Turn the crankshaft counterclockwise, and disconnect the plunger knock pin from the hook.

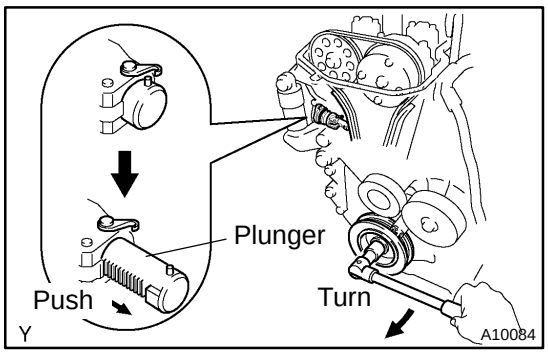

(d) Turn the crankshaft clockwise, and check that the slipper is pushed by the plunger.

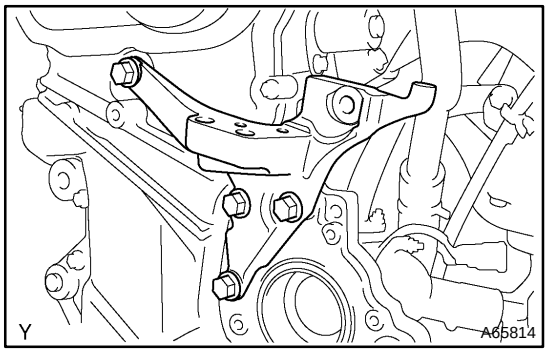

82. INSTALL TRANSVERSE ENGINE ENGINE MOUNTING BRACKET

Torque: 49 N·m (500 kgf·cm, 36 ft·lbf)

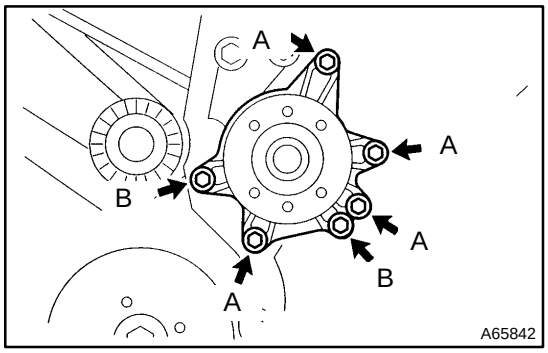

83. INSTALL WATER PUMP ASSY

(a) Place a new O–ring on the timing chain cover.

(b) Install the water pump with the 6 bolts.

Torque:9.0 N·m (92 kgf·cm, 80 in·lbf)

HINT:

Each bolt length is indicated in the illustration.

Bolt A	35 mm (1.38 in.)
Bolt B	28 mm (1.10 in.)

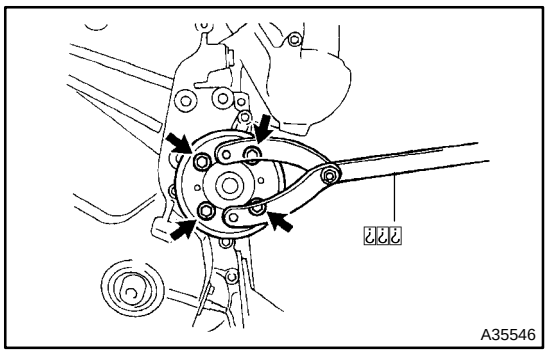

84. INSTALL WATER PUMP PULLEY

(a) Using SST the water pump pulley.

SST 09960–10010 (09962–01000, 09963–00600)

Torque: 15 N·m (153 kgf·cm, 11 ft·lbf)

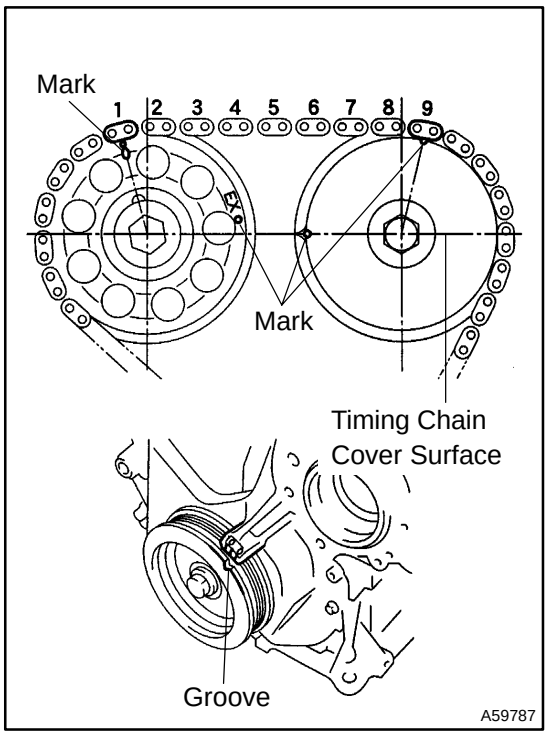

85. INSPECT VALVE CLEARANCE

(a) Set No. 1 cylinder to TDC/compression.

(1) Turn the crankshaft pulley, and align its groove with timing mark ”0” of the timing chain cover.

(2) Check that the point marks of the camshaft timing sprocket and VVT timing sprocket are in straight line on the timing chain cover surface as shown in the illustration.

HINT:

If not, turn the crankshaft 1 revolution (360°) and align the marks as above.

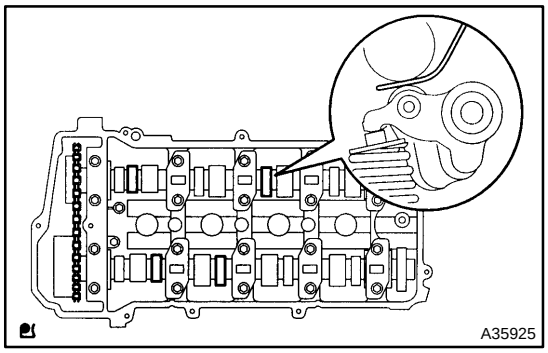

(b) Check only the valves indicated.

(1) Using a feeler gauge, measure the clearance between the valve rocker arm and camshaft.

(2) Record the out–of specification valve clearance measurements. They will be used later to determine the required replacement adjusting shim.

Valve clearance (Cold)

Intake	0.08 – 0.18 mm (0.0031 – 0.0070 in.)
Exhaust	0.22 – 0.32 mm (0.0087 – 0.0126 in.)

(c) Turn the crankshaft 1 revolution (360 °) and set No. 4 cylinder to TDC/compression.

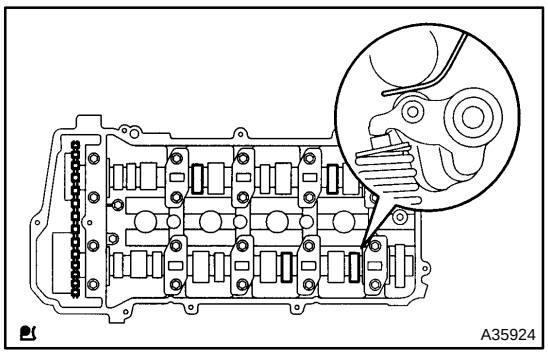

(d) Check only the valves indicated.

(1) Using a feeler gauge, measure the clearance between the valve rocker arm and camshaft.

(2) Record the out–of specification valve clearance measurements. They will be used later to determine the required replacement adjusting shim.

Valve clearance (Cold)

Intake	0.08 – 0.18 mm (0.0031 – 0.0070 in.)
Exhaust	0.22 – 0.32 mm (0.0087 – 0.0126 in.)

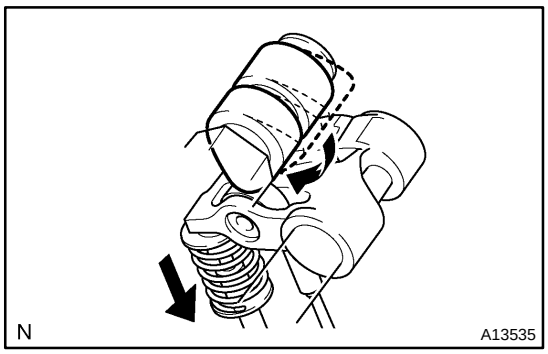

86. ADJUST VALVE CLEARANCE

(a) Set the SST.

NOTICE:

Remove the spark plug and take off the compression.

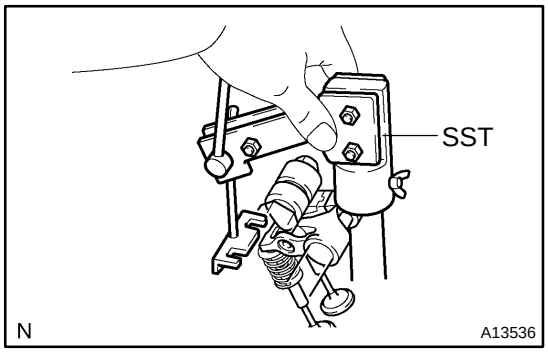

(1) Insert SST into the plug tube.

SST 09248–77010(09248–07010)

NOTICE:

- **SST cannot be inserted unless the set screw is loosened.**
- **Make sure that the camshaft is in the same condition as step (1).**

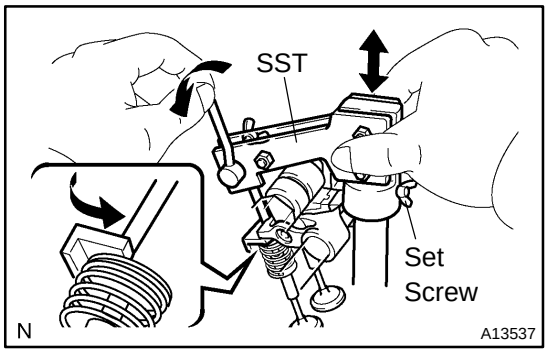

(2) Operate the lever so that SST's seat surface comes to contact with the valve retainer and lock them with the set screw.

NOTICE:

- **Clearance between the valve retainer and SST's seat surface is not allowed.**
- **Care should be taken not to make clearance when inserting SST, since a presence of clearance may unlock the keeper.**

(3) lock the set screw on the plug tube side of SST.

(4) Rotate the crankshaft so that the camshaft is positioned as shown in the illustration.

NOTICE:

- **Pay attention to the direction of the rotation to prevent the nose of the camshaft from interfering with the SST's shaft.**
- **Do not rotate the crankshaft excessively.**

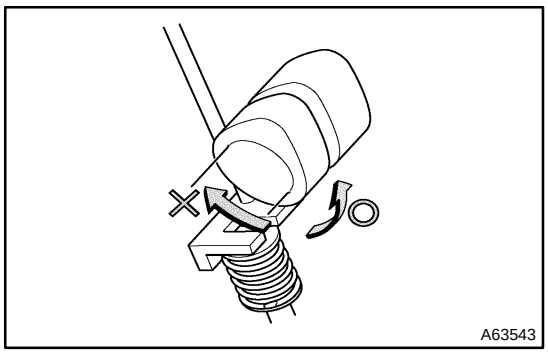

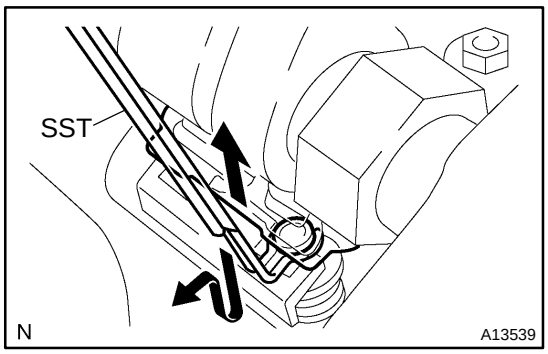

(b) Remove the adjusting shim.

(1) Lift the rocker arm to make a room and remove the adjusting shim using SST.

SST 09248–77010(09248–07010)

NOTICE:

Do not remove SST in the condition that adjusting shim is removed.

HINT:

- Setting SST from the right above makes the removal easy.
- If there is not enough room, reset SST.

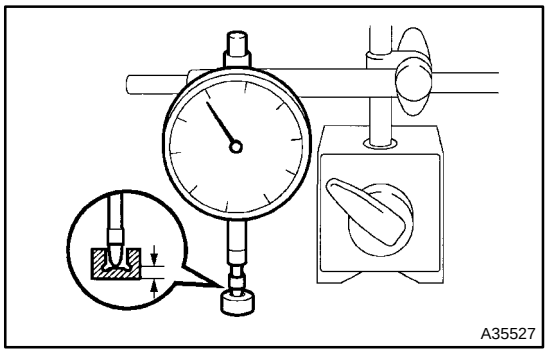

(2) Determine the size of the replaced shim according to there Formula or Charts:

- Using a dial indicator, measure the thickness of the removed shim.
- Calculate the thickness of a new shim so that the valve clearance comes within the specified value.

A	Thickness of new shim
B	Thickness of used shim
C	Measured valve clearance

Intake: A = B + (C – 0.13 mm (0.005 in.)) × 1.5

Exhaust: A = B + (C – 0.27 mm (0.011 in.)) × 1.5

HINT:

Shim are available in 41 sizes in increments of 0.020 mm (0.0008 in.), from 2.000 mm (0.0787 in.) to 2.800 mm (0.1102 in.).

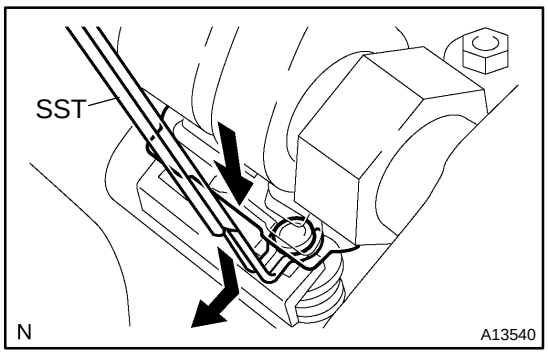

(c) Lift the rocker arm to make a room and use SST, install the adjusting shim.

HINT:

- Setting SST from the right above makes the removal easy.
- To remove SST from the adjusting shim, it is advisable to push down the rocker arm.

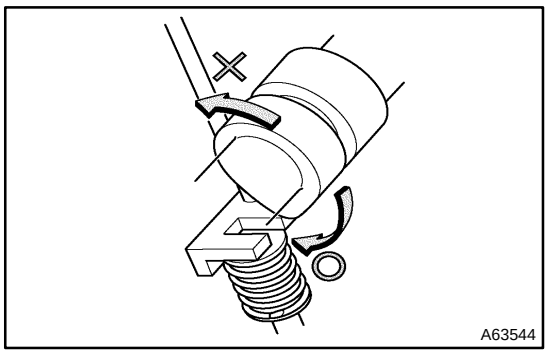

(d) Turn the crankshaft so that the related rocker arm, where the valve clearance is adjusted, is fully pushed down.

NOTICE:

- **Pay attention to the direction of the rotation to prevent the nose of the camshaft from interfering with the SST's shaft.**
- **Do not rotate the crankshaft excessively.**

(e) After loosening the 2 set screws of SST, remove SST itself.

SST 09248–77010(09248–07010)

87. INSTALL CYLINDER HEAD COVER SUB–ASSY

(a) Remove any old packing (FIPG) material.

(b) Install the new cylinder head cover gasket to the cylinder head cover.

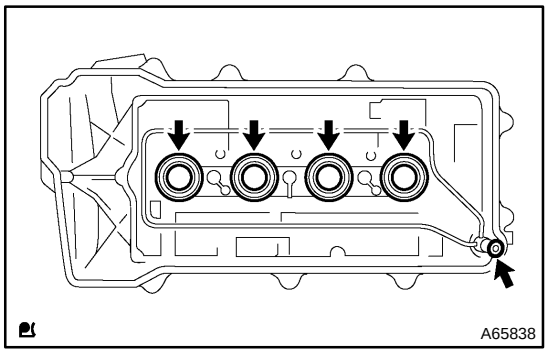

(c) Install the new spark plug tube gasket and a new O–ring to the cylinder head cover.

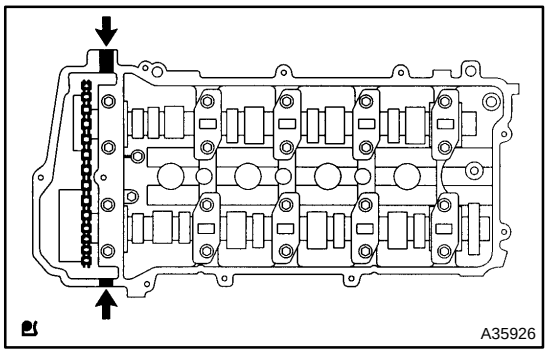

(d) Apply seal packing to 2 locations as shown in the illustration.

Seal packing: Part No. 08826–00080 or equivalent

NOTICE:

- **Remove any oil from the contact surface.**
- **Install the cylinder head cover within 3 minutes after applying seal packing.**
- **Do not put into engine oil 2 hours after installing.**

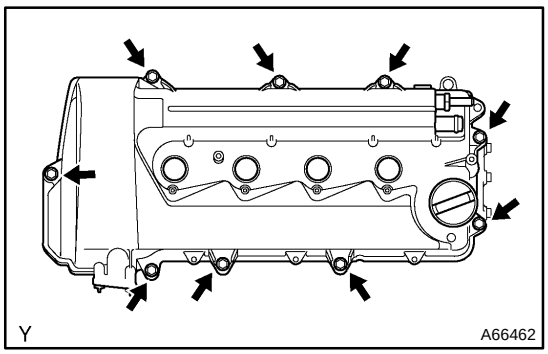

(e) Install the cylinder head cover and cable bracket with the 9 bolts.

Uniformly tighten the bolts, in the several passes,in the sequence shown.

Torque: 10 N·m (102 kgf·cm, 89 in.·lbf)

88. INSTALL SPARK PLUG
Torque: 18 N·m (184 kgf·cm, 13 ft·lbf)

89. INSTALL VENTILATION VALVE SUB–ASSY
Torque: 27 N·m (275 kgf·cm, 20 ft·lbf)

140R8–01

REPLACEMENT

1. WORK FOR PREVENTING GASOLINE FROM SPILLING OUT (See page 11–1)
2. REMOVE FRONT WHEELS
3. REMOVE ENGINE UNDER COVER RH
4. REMOVE ENGINE UNDER COVER LH
5. DRAIN COOLANT (See page 16–6)
6. DRAIN MANUAL TRANSAXLE OIL (M/T TRANSAXLE)
Torque: 39 N·m (398 kgf·cm, 29 ft·lbf)
7. DRAIN AUTOMATIC TRANSAXLE FLUID (A/T TRANSAXLE)
(a) Using a 10 mm hexagon wrench, remove the drain plug and a gasket. Drain automatic transaxle fluid.
(b) Install a new gasket and the drain plug.
Torque: 49 N·m (500 kgf·cm, 36 ft·lbf)
8. REMOVE CYLINDER HEAD COVER NO.2
(a) Remove the 3 bolts, the nut and the cylinder head cover No. 2.
9. REMOVE BATTERY

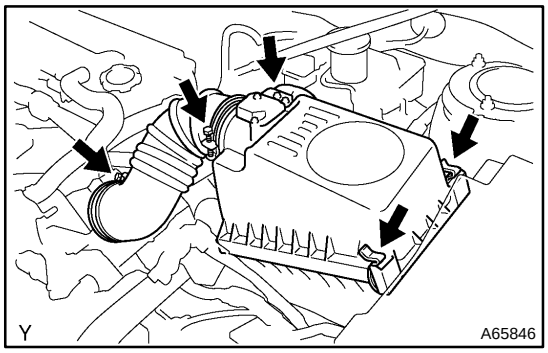

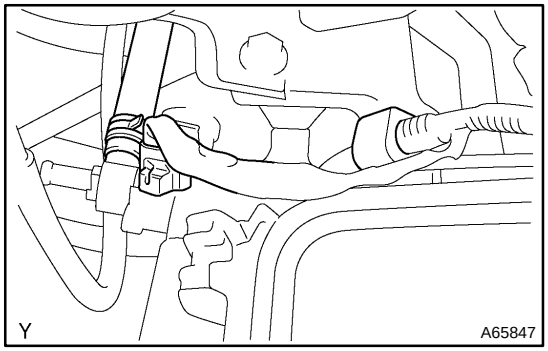

10. REMOVE AIR CLEANER ASSEMBLY WITH HOSE
(a) Disconnect the MAF meter connector.
(b) Place match marks on the vacuum hoses.
(c) Disconnect the 5 vacuum hoses from the air cleaner cap.
(d) Disconnect the 2 clamps, and disconnect the air cleaner cap from the air cleaner case.
(e) Loosen the hose clamp bolt, and disconnect the air cleaner hose from the throttle body.
(f) Remove the air cleaner assembly with hose.
(g) Remove the air filter.
(h) Disconnect the wireharness clamp, connector and hose.
(i) Remove the 3 bolts and the air cleaner case.

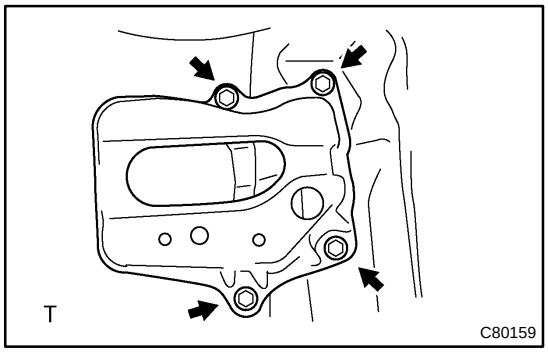

11. REMOVE BATTERY CARRIER
(a) Remove the 4 bolts and battery carrier.

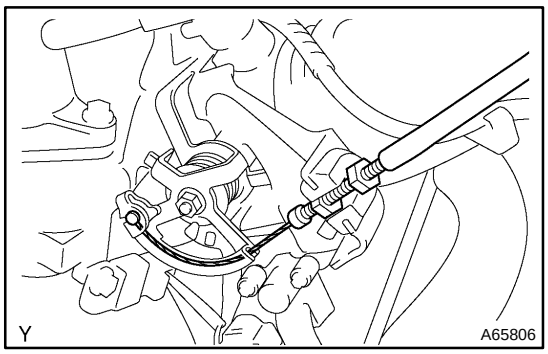

12. SEPARATE ACCELERATOR CONTROL CABLE ASSY

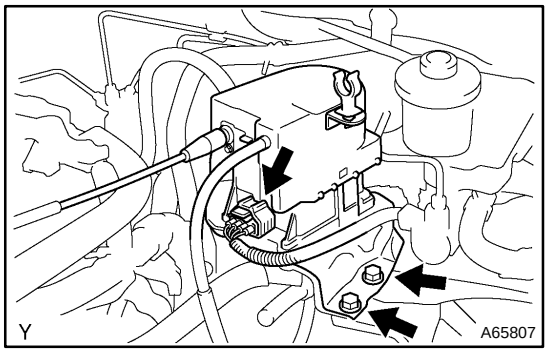

13. REMOVE CRUISE CONTROL ACTUATOR ASSY (W/ CRUISE CONTROL)

(a) Disconnect the actuator connector.
(b) Remove the 2 bolts, and disconnect the actuator from the body.

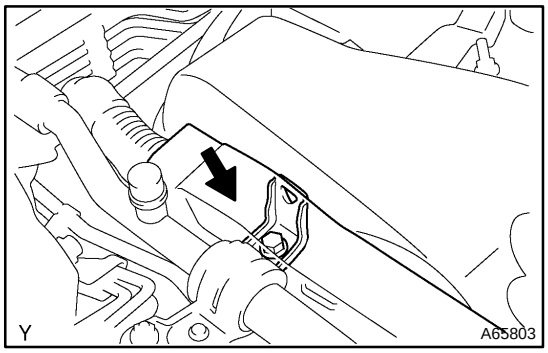

14. REMOVE WIRE HARNESS CLAMP

(a) Disconnect engine wire harness.
(b) Remove the bolt and wiring harness clamp bracket.

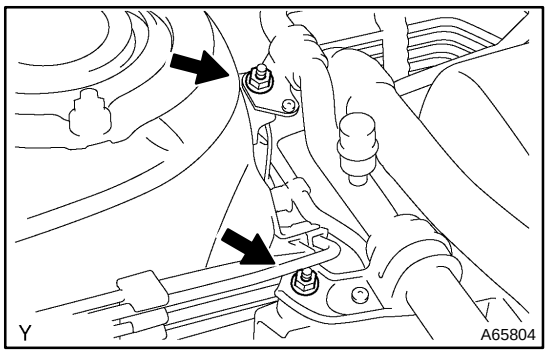

15. DISCONNECT SUCTION HOSE SUB–ASSY

(a) Remove the 2 nuts installing the suction hose sub–assy.
(b) Disconnect the suction hose sub–assy.

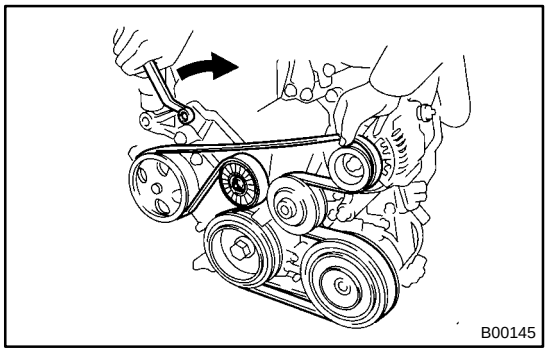

16. REMOVE FAN AND GENERATOR V BELT

(a) Turn the drive belt tensioner slowly clockwise and loosen it. Then, remove the drive belt and put back the drive belt tensioner little by little and fix it quietly.

17. REMOVE EFI FUEL PIPE CLAMP (See page 11–1)

18. DISCONNECT FUEL TUBE SUB–ASSY (See page 11–1)

19. DISCONNECT RADIATOR HOSE INLET

(a) Disconnect the radiator hose inlet from the radiator.

20. DISCONNECT RADIATOR HOSE OUTLET

(a) Disconnect the radiator hose outlet from the radiator.

21. DISCONNECT FLOOR SHIFT CABLE TRANSMISSION CONTROL SHIFT (M/T TRANSAXLE) (See page 41–17)

22. DISCONNECT FLOOR SHIFT CABLE TRANSMISSION CONTROL SELECT (M/T TRANSAXLE) (See page 41–17)

23. DISCONNECT FLOOR SHIFT CABLE TRANSMISSION CONTROL SHIFT (A/T TRANSAXLE) (See page 40–25)

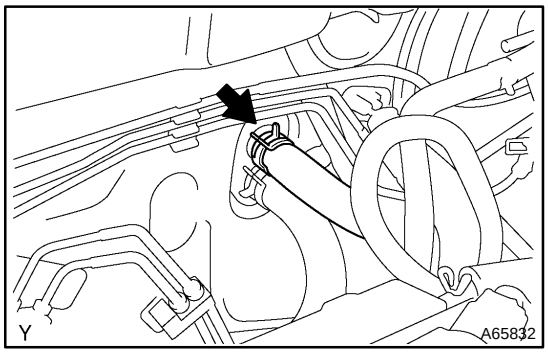

24. DISCONNECT HEATER INLET WATER HOSE

(a) Disconnect the heater inlet water hose from the air conditioner tube.

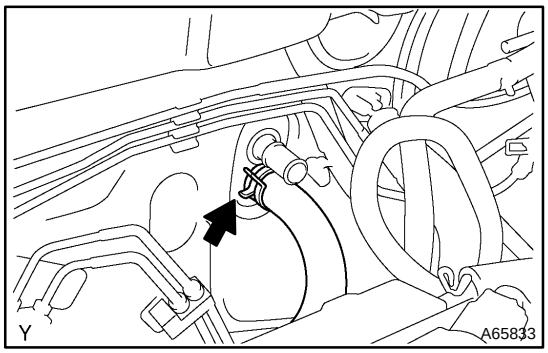

25. DISCONNECT HEATER OUTLET WATER HOSE

(a) Disconnect the heater outlet water hose from the air conditioner tube.

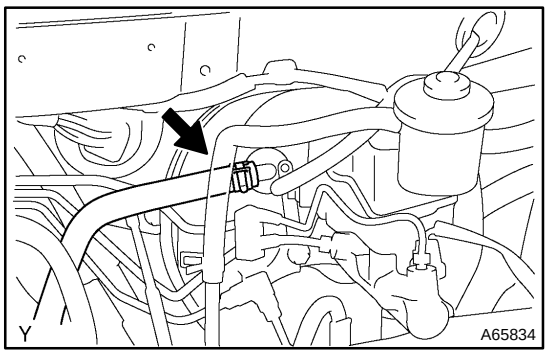

26. DISCONNECT UNION TO CONNECTOR TUBE HOSE

(a) Disconnect the union to check valve hose from the brake booster.

27. REMOVE GLOVE COMPARTMENT DOOR ASSY (See page 71–10)

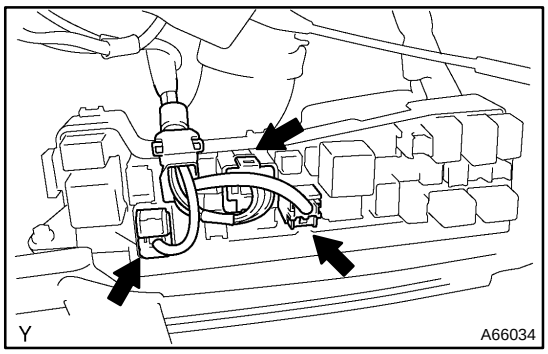

28. DISCONNECT ENGINE WIRE

(a) Remove the engine room relay block cover.

(b) Disconnect the 3 connectors.

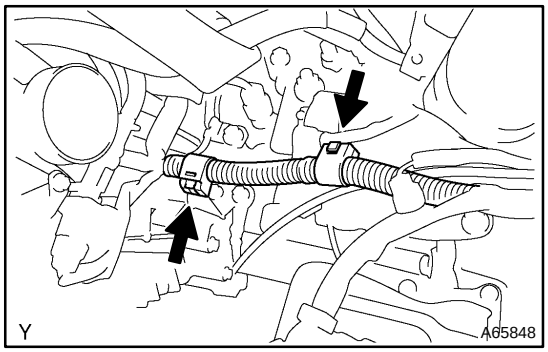

(c) Disconnect the 2 wireharness clamps.

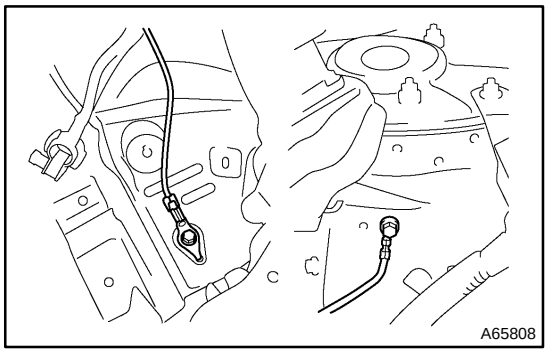

(d) Disconnect the 2 ground cables from the vehicle.

(e) Disconnect the 2 ECM connectors.

(f) Disconnect the 3 cowl wire connectors from connectors on bracket.

(g) Pull out the engine wire from the cabin.

29. REMOVE RADIATOR ASSY (W/ AIR CONDITIONER) (See page 16–15)

30. DISCONNECT CLUTCH RELEASE CYLINDER ASSY (M/T TRANSAXLE) (See page 41–17)

31. REMOVE COMPRESSOR AND MAGNETIC CLUTCH (W/ AIR CONDITIONER) (See page 55–34)

HINT:

Hung up the hoses instead of detaching.

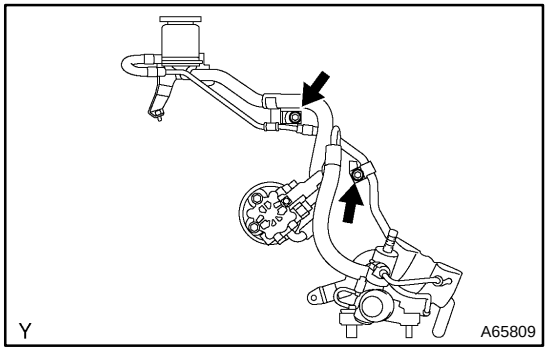

32. SEPARATE RETURN TUBE SUB–ASSY

(a) Remove the 2 clamp bolts, and separate the return tube sub–assy.

33. SEPARATE VANE PUMP OIL RESERVOIR ASSY

(a) Remove the 2 bolts and the oil reservoir assy.

34. REMOVE FLOOR PANEL BRACE FRONT (See page 15–9)

35. REMOVE EXHAUST PIPE ASSY FRONT (See page 15–9)

36. REMOVE STEERING INTERMEDIATE SHAFT (See page 51–22)

37. REMOVE FRONT AXLE HUB LH NUT(See page 30–32)

SST 09930–00010

38. REMOVE FRONT AXLE HUB RH NUT

SST 09930–00010

HINT:

Perform the same procedure as above on the opposite side.

39. SEPARATE TIE ROD END SUB–ASSY LH (See page 51–22)

SST 09628–62011

40. SEPARATE TIE ROD END SUB–ASSY RH

SST 09628–62011

HINT:

Perform the same procedure as above on the opposite side.

41. SEPARATE FRONT STABILIZER LINK ASSY LH (See page 26–22)

42. SEPARATE FRONT STABILIZER LINK ASSY RH

HINT:

Perform the same procedure as above on the opposite side.

43. SEPARATE FRONT SUSPENSION ARM SUB–ASSY LOWER NO.1 LH (See page 26–15)

44. SEPARATE FRONT SUSPENSION ARM SUB–ASSY LOWER NO.1 RH

HINT:

Perform the same procedure as above on the opposite side.

45. SEPARATE FRONT AXLE ASSY LH (See page 30–32)

46. SEPARATE FRONT AXLE ASSY RH

HINT:

Perform the same procedure as above on the opposite side.

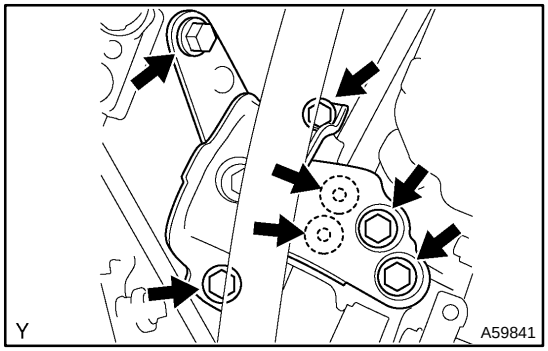

47. REMOVE ENGINE ASSEMBLY WITH TRANSAXLE

(a) Set the engine lifter.

(b) Remove the 5 bolts, 2 nuts and engine mounting insulator RH.

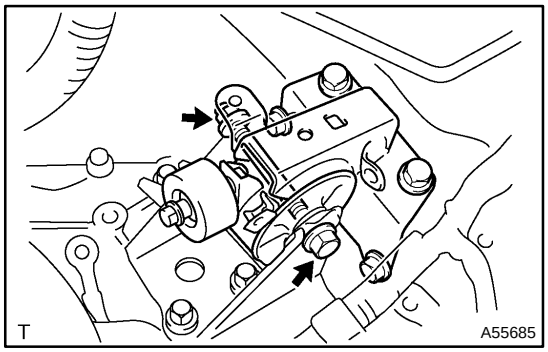

(c) Remove the through bolt and nut, detach the engine mounting insulator LH from the vehicle.

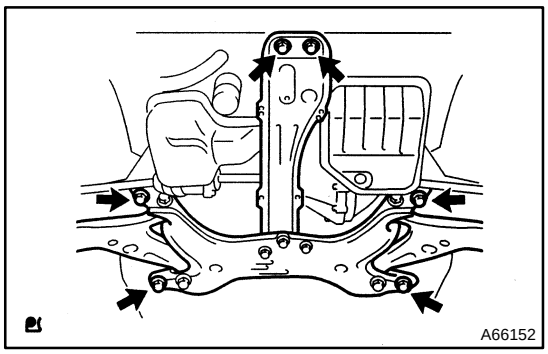

(d) Remove the 6 bolts, as shown in the illustration.
(e) Carefully, remove the engine assembly from the vehicle.

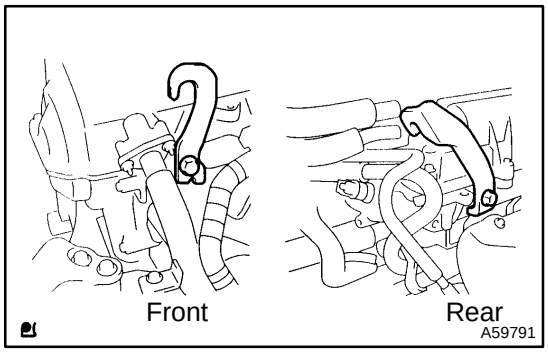

(f) Install the 2 engine hangers as shown in the illustration.
Parts No.:
No. 1 engine hanger 12281–88600
No. 2 engine hanger 12282–88600
Bolt: 91512–61020
Torque: 38 N·m (387 kgf·cm, 28 ft·lbf)

HINT:
Be sure to install engine hanger (12281–88600) to the front side of the engine, and engine hanger (12282–88600) to the rear side.

(g) Using the chain block and engine sling device, hang the engine assembly.

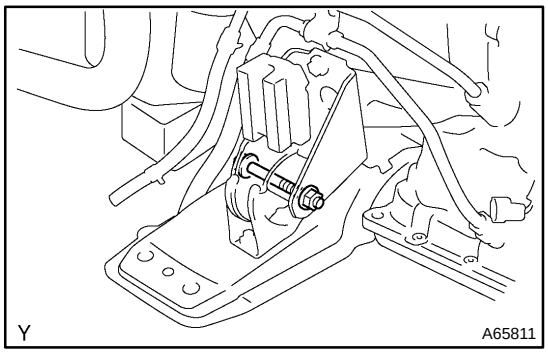

48. REMOVE FRONT SUSPENSION COSSMENBER W/CENTER MENBER

(a) Remove the through bolt and a nut, detach the engine mounting insulator FR from the engine mounting bracket.

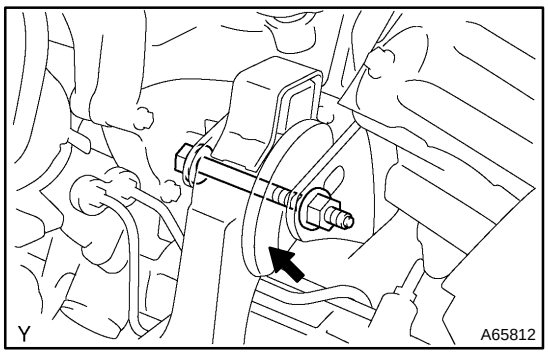

(b) Remove the through bolt, detach the engine mounting insulator RR from the suspension crossmember.
(c) Separate the engine and transaxle assembly from the front suspension crossmember w/center member.

49. REMOVE STARTER ASSY (See page 19–3)
50. REMOVE FRONT DRIVE SHAFT ASSY RH (See page 30–32)
SST 09520–01010, 09520–24010 (09520–32040)
51. SEPARATE MANUAL TRANSAXLE ASSY (M/T TRANSAXLE) (See page 41–17)
52. SEPARATE AUTOMATIC TRANSAXLE ASSY (A/T TRANSAXLE) (See page 40–25)

53. REMOVE CLUTCH COVER ASSY (M/T TRANSAXLE) (See page 42–18)

54. REMOVE CLUTCH DISC ASSY (M/T TRANSAXLE) (See page 42–18)

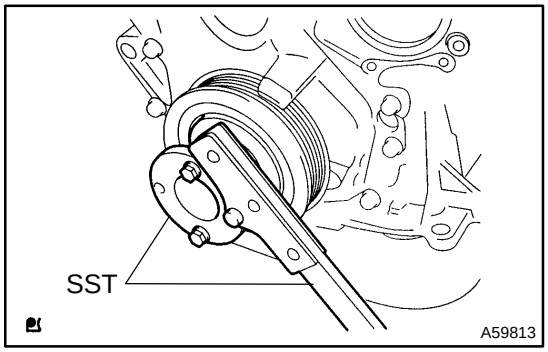

55. REMOVE DRIVE PLATE AND RING GEAR OR FLYWHEEL

(a) Fix the crankshaft with SST, then remove the drive plate and ring gear or the flywheel.
SST 09213–70011 (09213–70020), 09330–00021

56. INSTALL ENGINE STAND

57. REMOVE OIL LEVEL GAGE SUB–ASSY

58. REMOVE OIL LEVEL GAGE GUIDE

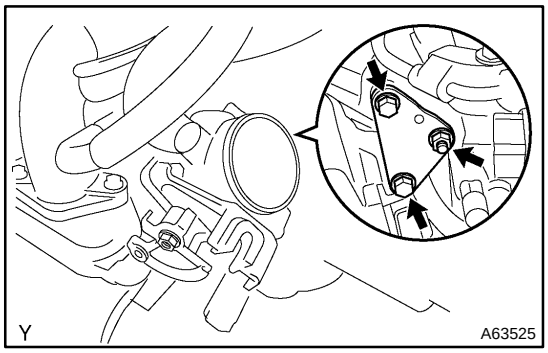

59. REMOVE SURGE TANK STAY NO.1

(a) Remove the 2 bolts, the nut and the surge tank stay.

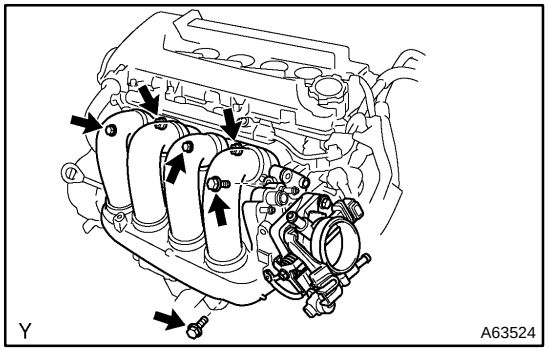

60. REMOVE INTAKE MANIFOLD

(a) Remove the 4 bolts, the 2 nuts, the intake manifold and the gasket.

61. REMOVE V–RIBBED BELT TENSIONER ASSY

(a) Remove the bolt, the nut and the v–ribbed belt tensioner assy.

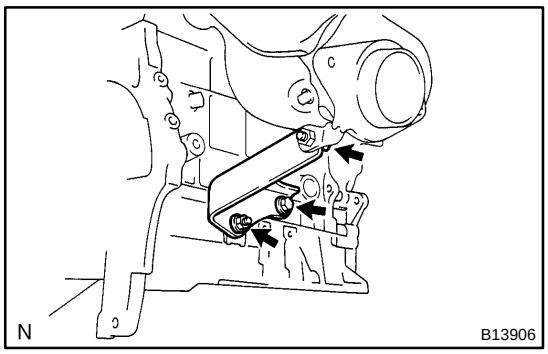

62. REMOVE MANIFOLD STAY

(a) Remove the 2 bolts, the nut and exhaust manifold stay.

63. REMOVE EXHAUST MANIFOLD HEAT INSULATOR NO.1

64. REMOVE EXHAUST MANIFOLD

(a) Remove the 3 bolts, 2 nuts, exhaust manifold and gasket.

65. REMOVE GENERATOR BRACKET NO.1 (See page 19–15)

66. REMOVE GENERATOR ASSY (See page 19–15)

67. REMOVE FUEL DELIVERY PIPE SUB–ASSY (See page 11–15)

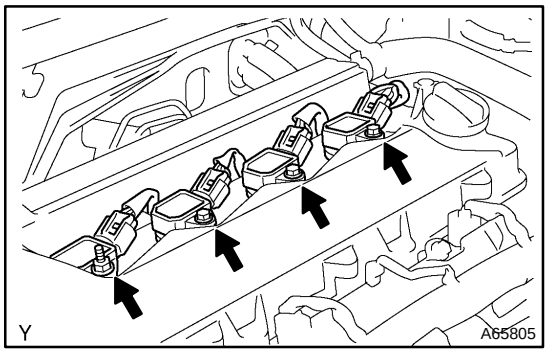

68. REMOVE IGNITION COIL ASSY

(a) Remove the 3 bolts, the nut and the 4 ignition coils.

69. REMOVE THERMOSTAT (See page 16–13)

70. REMOVE WATER BY–PASS PIPE NO.1

(a) Remove the 2 bolts, the 2 nuts, the water by–pass pipe No. 1 and the gasket.

71. REMOVE ENGINE OIL PRESSURE SWITCH ASSY

(a) Using the SST, remove the oil pressure switch.

SST 09268–46021

72. REMOVE UNION TO CONNECTOR TUBE HOSE

(a) Remove the clamp and tube.

73. REMOVE CRANK POSITION SENSOR

74. REMOVE CAM POSITION SENSOR

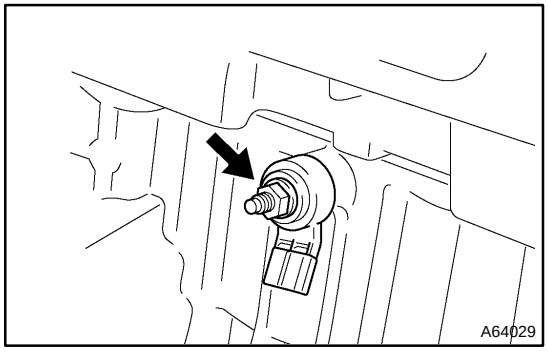

75. REMOVE KNOCK CONTROL SENSOR

(a) Remove the nut and the knock control sensor.

76. REMOVE E.F.I. ENGINE COOLANT TEMPERATURE SENSOR

(a) Using a SST, remove the water temperature sensor.
SST 09817–33190

77. REPLACE PARTIAL ENGINE ASSY

78. INSTALL E.F.I. ENGINE COOLANT TEMPERATURE SENSOR

(a) Install a new gasket to the water temperature sensor.

(b) Using a SST, install the water temperature sensor.
SST 09817–33190
Torque: 20 N·m (208 kgf·cm, 15 ft·lbf)

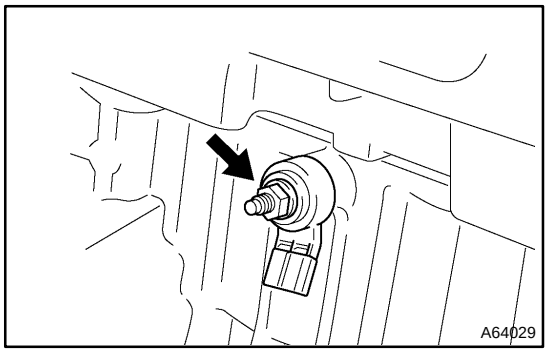

79. INSTALL KNOCK CONTROL SENSOR

(a) install the nut and the knock control sensor.
Torque: 20 N·m (204 kgf·cm, 15 ft·lbf)

80. INSTALL CAM POSITION SENSOR
Torque: 9.0 N·m (92 kgf·cm, 80 in.·lbf)

81. INSTALL CRANK POSITION SENSOR

(a) Install the crank position sensor and cord wiring clamp.
Torque: 9.0 N·m (92 kgf·cm, 80 in.·lbf)

82. INSTALL UNION TO CONNECTOR TUBE HOSE
Torque: 9.0 N·m (92 kgf·cm, 80 in.·lbf)

83. INSTALL ENGINE OIL PRESSURE SWITCH ASSY

(a) Clean the threads of the oil pressure switch, apply adhesive there.
Adhesive:
Part No. 08833–00080, THREE BOND 1344,

(b) Using a SST, install the oil pressure switch.
SST 09268–46021
Torque: 15 N·m (153 kgf·cm, 11 ft·lbf)

84. INSTALL WATER BY–PASS PIPE NO.1

(a) Install the 2 bolts, the 2 nuts, the new gasket and the water by–pass pipe.
Torque:
8.5 N·m (87 kgf·cm, 75 in.·lbf) for M6
21 N·m (214 kgf·cm, 15 ft·lbf) for M8
10 N·m (102 kgf·cm, 7 ft·lbf) for Nut

85. INSTALL THERMOSTAT (See page 16–13)

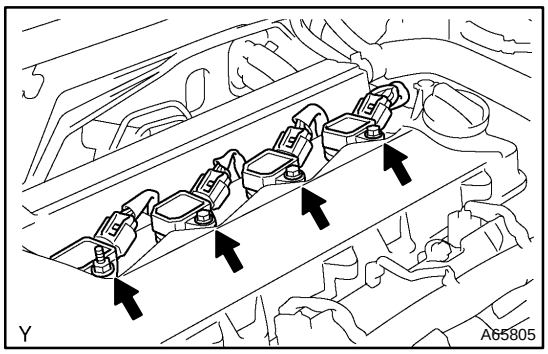

86. INSTALL IGNITION COIL ASSY

(a) Install the 3 bolts, the nut and the 4 ignition coils.
Torque: 9.0 N·m (92 kgf·cm, 80 in.·lbf)

87. INSTALL FUEL DELIVERY PIPE SUB–ASSY (See page 11–15)

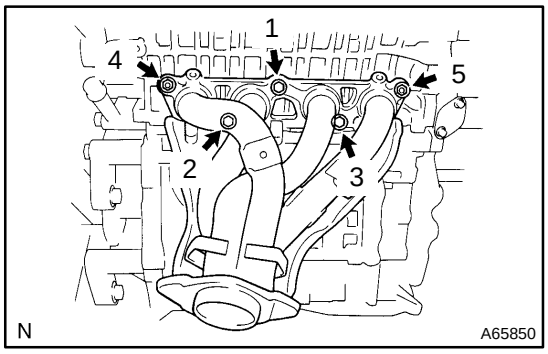

88. INSTALL EXHAUST MANIFOLD

(a) Install a new gasket.
(b) Install and uniformly tighten the 3 bolts and 2 nuts in several passes and in the sequence shown.
Torque: 50 N·m (510 kgf·cm, 37 ft·lbf)

89. INSTALL EXHAUST MANIFOLD HEAT INSULATOR NO.1
Torque: 21 N·m (214 kgf·cm, 15 ft·lbf)

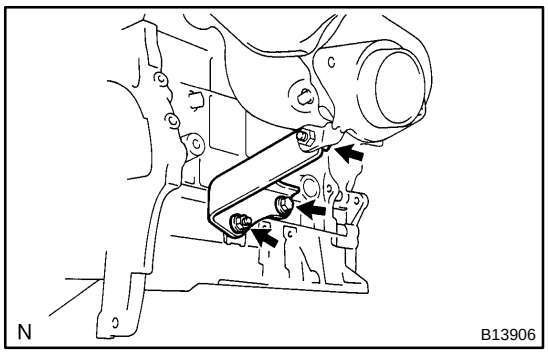

90. INSTALL MANIFOLD STAY
Torque: 50 N·m (510 kgf·cm, 37 ft·lbf)

91. INSTALL V–RIBBED BELT TENSIONER ASSY

(a) Install the bolt, the nut and v–ribbed belt tensioner assy.
Torque:
Nut: 29 N·m (296 kgf·cm, 21 ft·lbf)
Bolt: 100 N·m (1,020 kgf·cm, 74 ft·lbf)

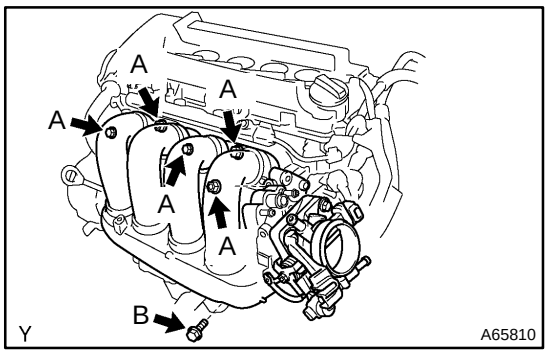

92. INSTALL INTAKE MANIFOLD

(a) Install the new gasket, the intake manifold with the 4 bolts and 2 nuts.
Torque:
A: 34 N·m (347 kgf·cm, 25 ft·lbf)
B: 46 N·m (469 kgf·cm, 34 ft·lbf)

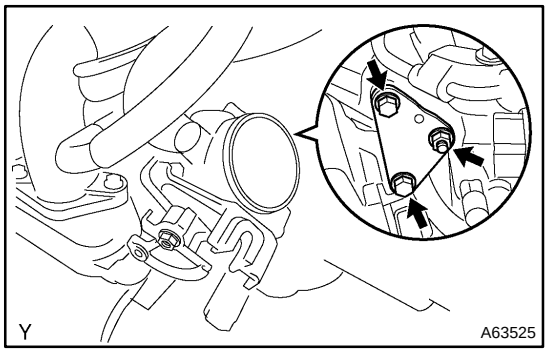

93. INSTALL SURGE TANK STAY NO.1

(a) Install the surge tank stay with the 2 bolts and nut.
Torque:24 N·m (245 kgf·cm, 18 ft·lbf)

94. INSTALL OIL LEVEL GAGE GUIDE

(a) Apply a light coat of engine oil to a new O–ring, install it to the oil level gage guide.
(b) Install the oil level gage and guide with the bolt.
Torque: 24 N·m (245 kgf·cm, 18 ft·lbf)

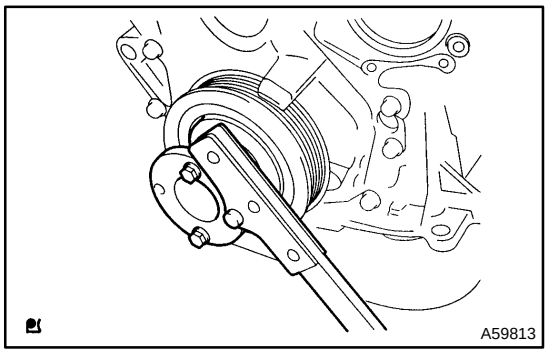

95. INSTALL FLYWHEEL SUB–ASSY (M/T TRANSAXLE)

(a) Fix the crankshaft with SST.
SST 09213–70011 (09213–70020), 09330–00021

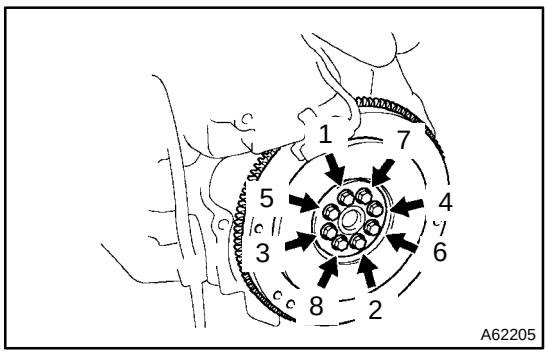

(b) Clean the bolt and bolt hole.
(c) Apply adhesive to the bolts.
Adhesive:
Part No. 09330–00070, THREE BOND or equivalent.
(d) Install and uniformly tighten the 8 bolts, in several passes, in the sequence shown.
Torque: 49 N·m (500 kgf·cm, 36 ft·lbf)

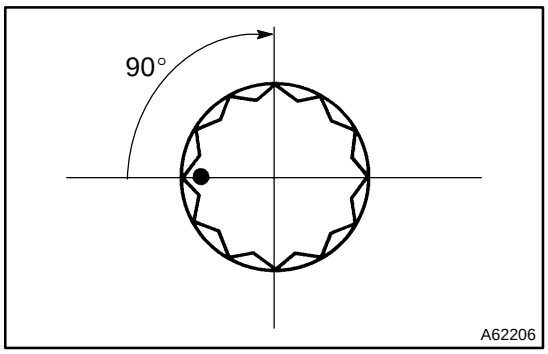

(e) Mark the bolts with paint.
(f) Retighten the bolts by an additional 90°.
(g) Check that the point marked bolts are moved at 90° angle.

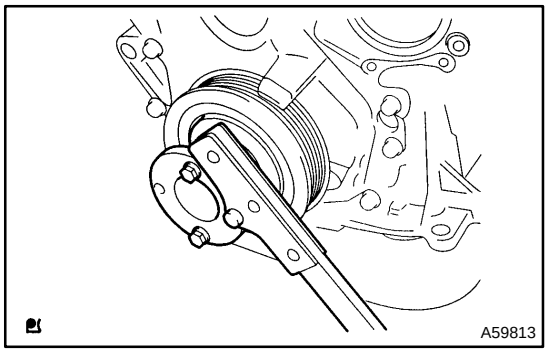

96. INSTALL DRIVE PLATE & RING GEAR SUB–ASSY (A/T TRANSAXLE)

(a) Fix the crankshaft with SST.
SST 09213–70011 (09213–70020), 09330–00021

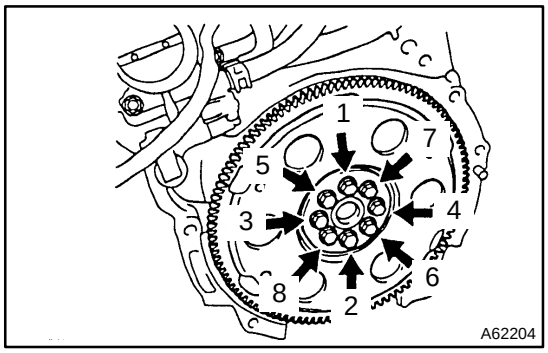

(b) Clean the bolt and bolt hole.
(c) Apply adhesive to the bolts.
Adhesive:
Part No. 09330–00070, THREE BOND or equivalent.
(d) Install and uniformly tighten the 8 bolts, in several passes, in the sequence shown.
Torque: 88 N·m (897 kgf·cm, 65 ft·lbf)

97. INSTALL CLUTCH DISC ASSY (M/T TRANSAXLE) (See page 42–18)
SST 09301–00210
98. INSTALL CLUTCH COVER ASSY (M/T TRANSAXLE) (See page 42–18)
SST 09301–00210
99. INSTALL FRONT DRIVE SHAFT ASSY LH (See page 30–32)
100. INSTALL MANUAL TRANSAXLE ASSY (M/T TRANSAXLE) (See page 41–17)
101. INSTALL AUTOMATIC TRANSAXLE ASSY (A/T TRANSAXLE) (See page 40–25)
102. INSTALL STARTER ASSY (See page 19–3)

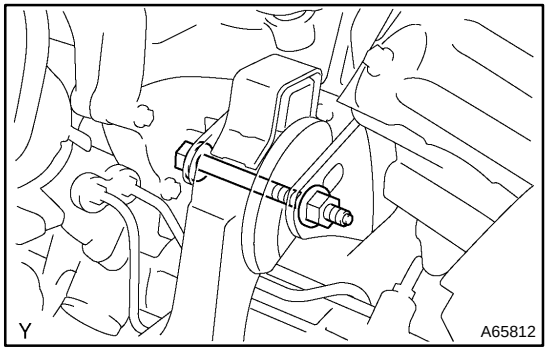

103. INSTALL FRONT SUSPENSION COSSMENBER W/CENTER MENBER

(a) Attach the engine and transaxle assembly to the suspension crossmember w/center member.
(b) Install the bolt holding the rear engine mounting bracket to the mounting insulator.
Torque: 87 N·m (887 kgf·cm, 64 ft·lbf)

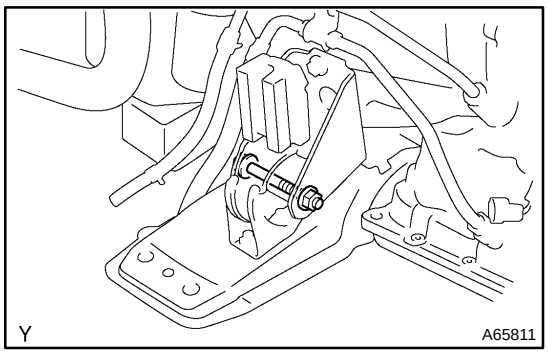

(c) Install the bolt holding the front engine mounting bracket to the mounting insulator.
Torque: 52 N·m (530 kgf·cm, 38 ft·lbf)

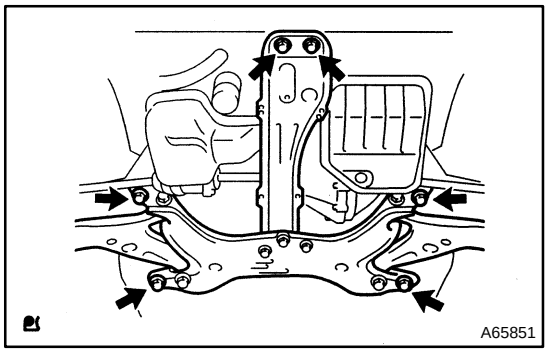

104. INSTALL ENGINE ASSEMBLY WITH TRANSAXLE

(a) Set the engine assembly with transaxle on the engine lifter.

(b) Install the engine assembly to the vehicle.

(c) Temporarily, install the suspension crossmember and 6 bolts.

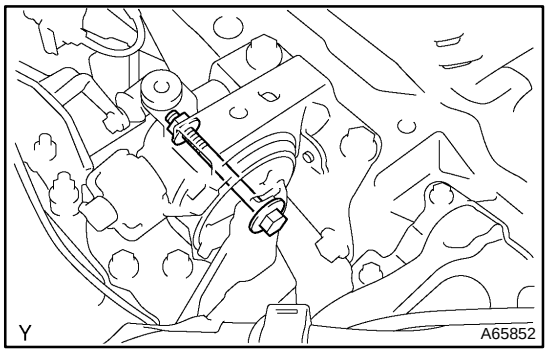

(d) Install the engine mounting insulator LH.
Torque: 80 N·m (816 kgf·cm, 60 ft·lbf)

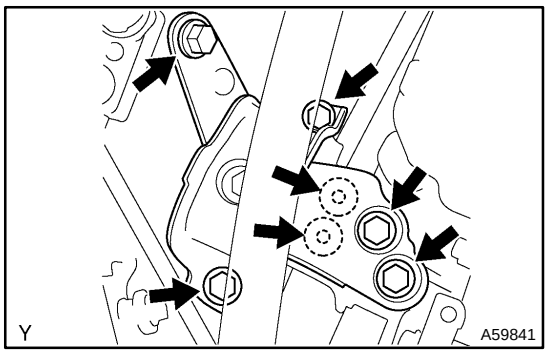

(e) Install the engine mounting insulator RH.
Torque: 52 N·m (531 kgf·cm, 38 ft·lbf)

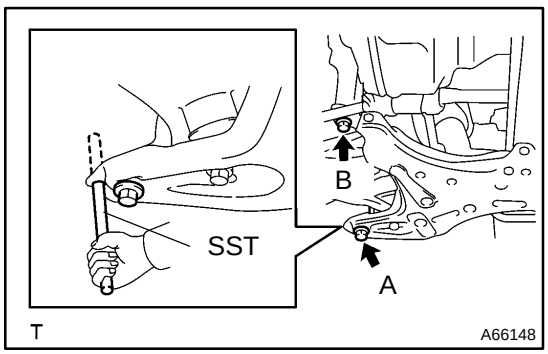

(f) Insert SST to the positioning holes on the right handle crossmember and on the right–handle of the vehicle.
SST 09670–00010

(g) Temporarily tighten the bolt A first, then bolt B.

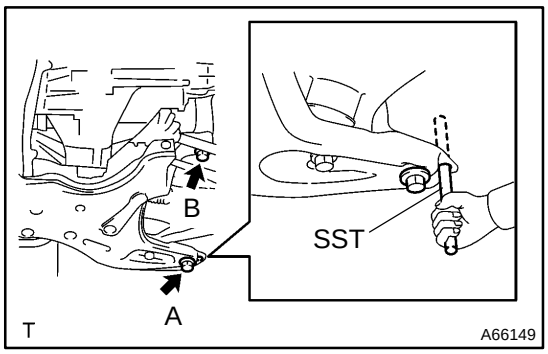

(h) Insert SST to the positioning holes on the left–handle crossmember and on the left–handle of the vehicle.
SST 09670–00010

(i) Temporarily tighten the bolt A first, then bolt B.

(j) Insert SST to the positioning holes on the right–handle crossmember and the right–handle of the vehicle, then the bolts with a specified torque.
SST 09670–00010
Torque:
Bolt A: 157 N·m (1,601 kgf·cm, 116 ft·lbf)
Bolt B: 113 N·m (1,152 kgf·cm, 83 ft·lbf)

(k) Insert SST to the positioning holes on the left–handle crossmember and the left–handle of the vehicle, then tighten the bolts with a specified torque.
SST 09670–00010
Torque:
Bolt A: 157 N·m (1,601 kgf·cm, 116 ft·lbf)
Bolt B: 113 N·m (1,152 kgf·cm, 83 ft·lbf)

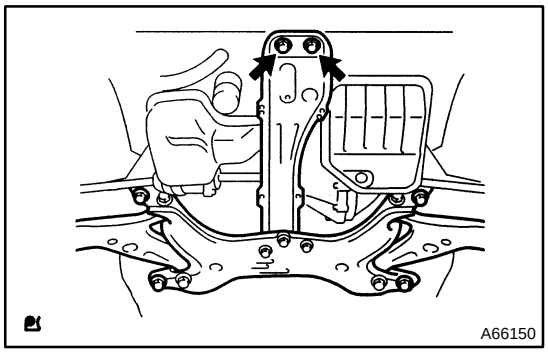

(l) Tighten the 2 bolts as shown in the illustration.
Torque: 39 N·m (398 kgf·cm, 29 ft·lbf)

NOTICE:
After installing the crossmember, check that the positioning holes on the crossmember and the vehicle are aligned with each other.

105. INSTALL FRONT AXLE ASSY LH (See page 30–32)
106. INSTALL FRONT AXLE ASSY RH
HINT:
Perform the same procedure as above on the opposite side.
107. INSTALL FRONT SUSPENSION ARM SUB–ASSY LOWER NO.1 LH (See page 26–15)
108. INSTALL FRONT SUSPENSION ARM SUB–ASSY LOWER NO.1 RH
HINT:
Perform the same procedure as above on the opposite side.
109. INSTALL FRONT STABILIZER LINK ASSY LH (See page 26–22)
110. INSTALL FRONT STABILIZER LINK ASSY RH
HINT:
Perform the same procedure as above on the opposite side.
111. INSTALL TIE ROD END SUB–ASSY LH (See page 51–22)
112. INSTALL TIE ROD END SUB–ASSY RH
HINT:
Perform the same procedure as above on the opposite side.
113. INSTALL FRONT AXLE HUB LH NUT (See page 30–32)
114. INSTALL FRONT AXLE HUB RH NUT
HINT:
Perform the same procedure as above on the opposite side.

115. INSTALL STEERING INTERMEDIATE SHAFT (See page 51–22)
116. INSTALL EXHAUST PIPE ASSY FRONT (See page 15–9)
117. INSTALL FLOOR PANEL BRACE FRONT (See page 15–9)

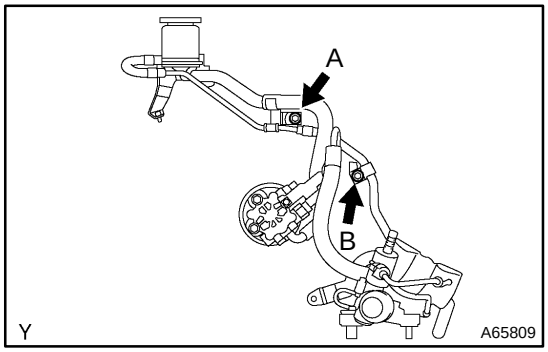

118. INSTALL RETURN TUBE SUB–ASSY
(a) Install the return tube with the 2 bolts.
Torque:
Bolt A: 5.0 N·m (51 kgf·cm, 44 in.·lbf)
Bolt B: 7.8 N·m (80 kgf·cm, 69 in.·lbf)

119. INSTALL COMPRESSOR AND MAGNETIC CLUTCH (W/ AIR CONDITIONER) (See page 55–34)
120. INSTALL CLUTCH RELEASE CYLINDER ASSY (M/T TRANSAXLE) (See page 42–15)
121. INSTALL GENERATOR ASSY (See page 19–15)
122. INSTALL GENERATOR BRACKET NO.1(See page 19–15)
123. INSTALL RADIATOR ASSY (W/ AIR CONDITIONER) (See page 16–15)
124. INSTALL GLOVE COMPARTMENT DOOR ASSY (See page 71–10)
125. INSTALL FLOOR SHIFT CABLE TRANSMISSION CONTROL SHIFT (M/T TRANSAXLE) (See page 41–17)
126. INSTALL FLOOR SHIFT CABLE TRANSMISSION CONTROL SELECT (M/T TRANSAXLE) (See page 41–17)
127. INSTALL FLOOR SHIFT CABLE TRANSMISSION CONTROL SHIFT (A/T TRANSAXLE) (See page 40–25)
128. CONNECT FUEL TUBE SUB–ASSY (See page 11–1)
129. INSTALL EFI FUEL PIPE CLAMP (See page 11–1)

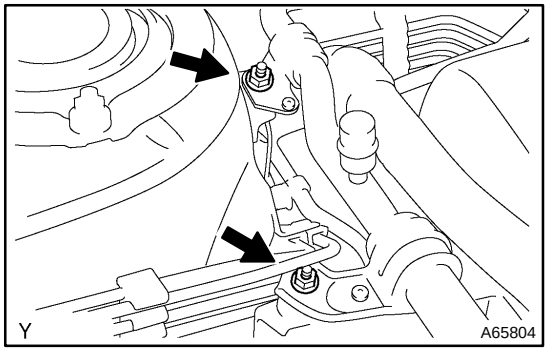

130. INSTALL SUCTION HOSE SUB–ASSY
Torque: 9.8 N·m (100 kgf·cm, 7 ft·lbf)

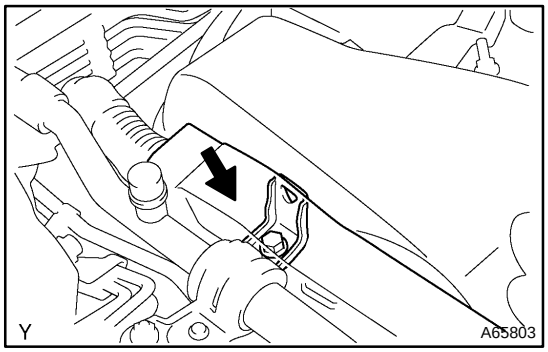

131. INSTALL WIRE HARNESS CLAMP
Torque: 10 N·m (102 kgf·cm, 7 ft·lbf)

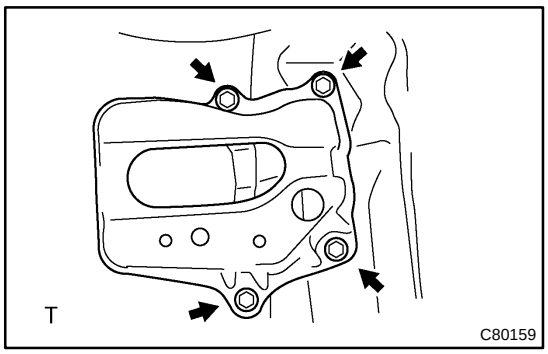

132. INSTALL BATTERY CARRIER

(a) Install the battery carrier with the 4 bolts.
Torque: 13 N·m (132 kgf·cm, 10 ft·lbf)

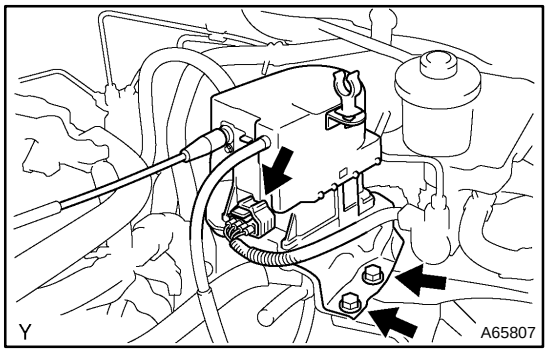

133. INSTALL CRUISE CONTROL ACTUATOR ASSY (W/ CRUISE CONTROL)

(a) Install the actuator with the 2 bolts.
Torque: 6.0 N·m (61 kgf·cm, 53 in.·lbf)
(b) Connect the actuator connector.

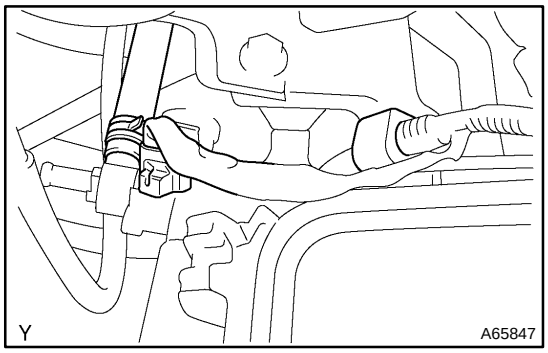

134. INSTALL AIR CLEANER ASSEMBLY WITH HOSE

(a) Install the air cleaner case with the 3 bolts.
Torque: 7.0 N·m (71 kgf·cm, 62 in.·lbf)
(b) Connect the wireharness clamp, connector and hose.
(c) Install the air filter.

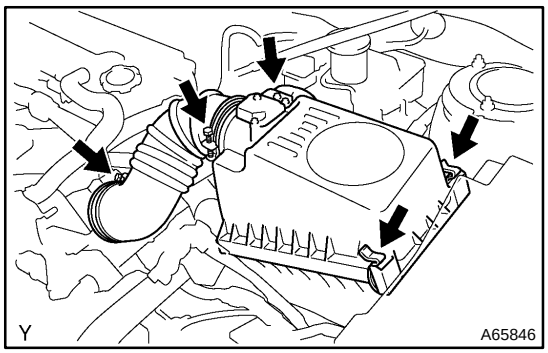

(d) Connect the air cleaner hose to the throttle body.
(e) Attach the air cleaner cap to the air cleaner case, and install the 2 clamps.
(f) Tighten the air cleaner hose clamp.
(g) Connect the 5 vacuum hoses for the air cleaner cap.
(h) Connect the MAF meter connector.

135. INSTALL CYLINDER HEAD COVER NO.2
Torque: 7.0 N·m (71 kgf·cm, 62 in.·lbf)
136. ADD MANUAL TRANSAXLE OIL (M/T TRANSAXLE) (See page 41–17)
137. ADD AUTOMATIC TRANSAXLE FLUID (A/T TRANSAXLE)
138. ADD ENGINE OIL
139. ADD COOLANT (See page 16–6)
140. CHECK ENGINE OIL LEAK
141. CHECK ENGINE COOLANT LEAK (See page 16–6)
142. CHECK FUEL LEAK

143. INSTALL FRONT WHEELS
Torque: 103 N·m (1,050 kgf·cm, 76 ft·lbf)
144. CHECK EXHAUST GAS LEAK
145. INSPECT CHECK IDLE SPEED AND IGNITION TIMING (See page 14–174)
SST 09843–18040
146. INSPECT CO/HC (See page 14–174)
147. INSPECT AND ADJUST FRONT WHEEL ALIGNMENT (See page 26–6)
148. CHECK ABS SPEED SENSOR SIGNAL (See page 05–316)

CYLINDER HEAD ASSY (2ZZ–GE)

140RI–01

COMPONENTS

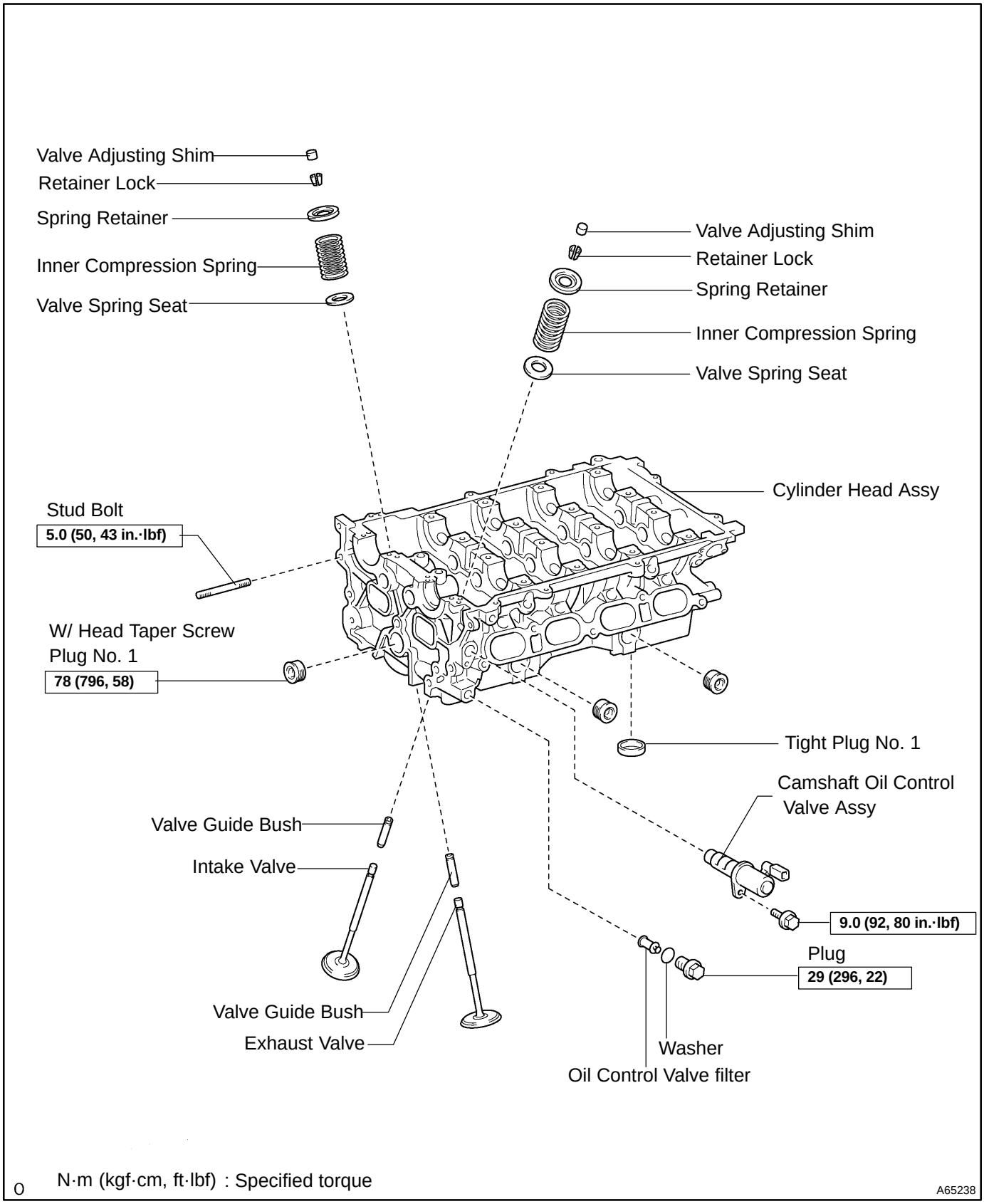

CYLINDER HEAD ASSY (2ZZ–GE)

140RJ–01

OVERHAUL

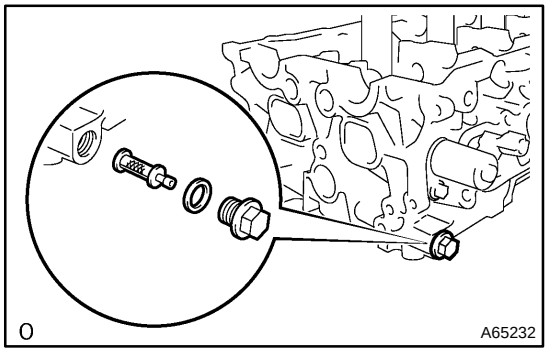

1. REMOVE OIL CONTROL VALVE FILTER

(a) Remove the plug and oil control valve filter.

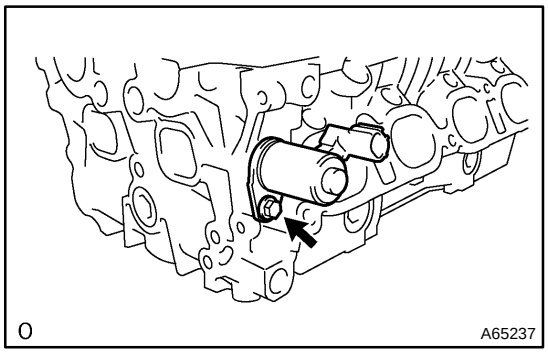

2. REMOVE CAMSHAFT TIMING OIL CONTROL VALVE ASSY

(a) Remove a bolt and oil control valve.

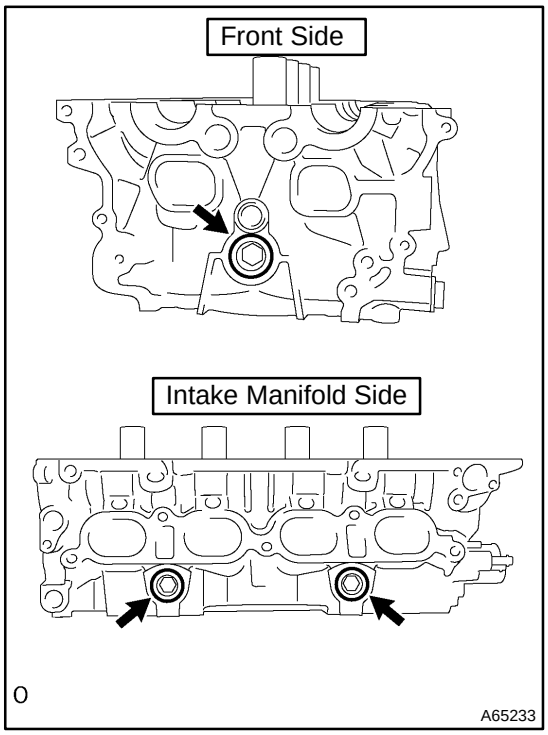

3. REMOVE W/HEAD TAPER SCREW PLUG NO.1

(a) Using hexagon socket wrench (14), remove 3 taper screw plug No.1 as shown in the illustration.

4. REMOVE VALVE ADJUSTING SHIM

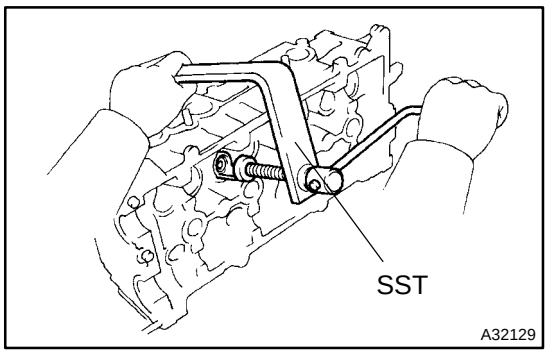

5. REMOVE INNER COMPRESSION SPRING

HINT:

Arrange the inner compression spring, spring retainer and retainer lock in the correct order.

(a) Using SST compress the inner compression spring and remove 2 keepers.
SST 09202–70020

(b) Remove the spring retainer.

(c) Remove the inner compression spring.

6. REMOVE VALVE STEM OIL O SEAL OR RING

(a) Using a needle–nose pliers,remove the valve stem oil o seal or ring.

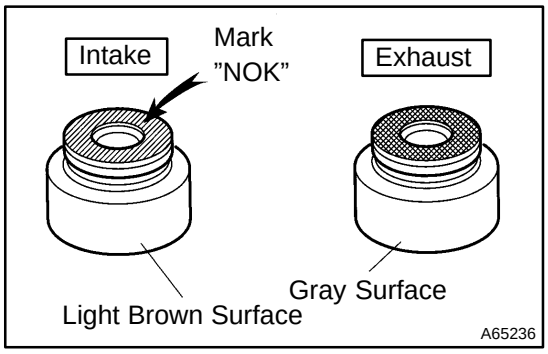

7. REMOVE VALVE SPRING SEAT

(a) Using compressed air and magnetic finger, remove the valve spring seat by blowing air.

HINT:

Arrange the spring seat in the correct order.

8. REMOVE INTAKE VALVE

HINT:.

Arrange the intake valve in the correct order.

9. REMOVE EXHAUST VALVE

HINT:

Arrange the exhaust valve in the correct order.

10. REMOVE VALVE GUIDE BUSH

(a) Heat the cylinder head to 110 – 130°C (230 – 266°F).

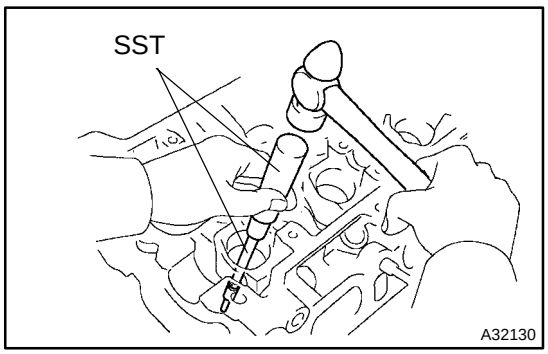

(b) Using SST and a hammer tap out the valve guide bushing.
SST 09201–10000, 09201–01055, 09950–70010 (09951–07100)

11. REMOVE STUD BOLT

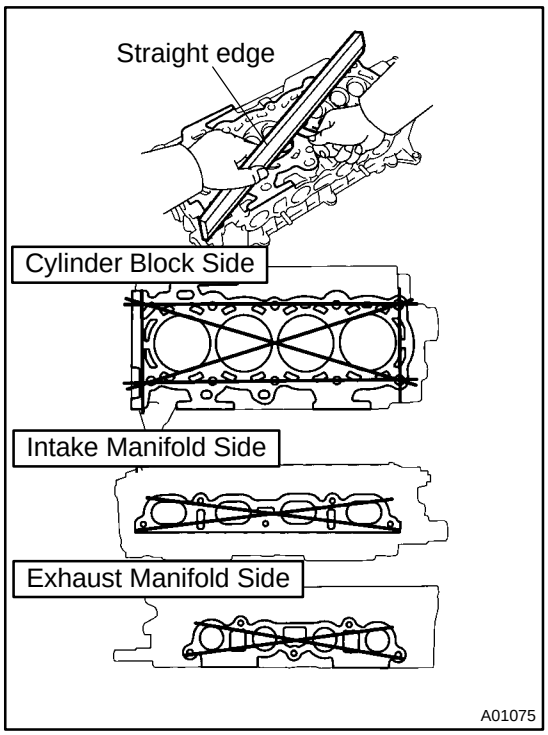

12. INSPECT CYLINDER HEAD FOR FLATNESS

(a) Using a precision straight edge and a feeler gauge, measure the surface contacting the cylinder block and the manifolds for warpage.

Maximum warpage:

Cylinder block side	0.2 mm (0.0080 in.)
Intake manifold side	0.2 mm (0.0080 in.)
Exhaust manifold side	0.3 mm (0.0120 in.)

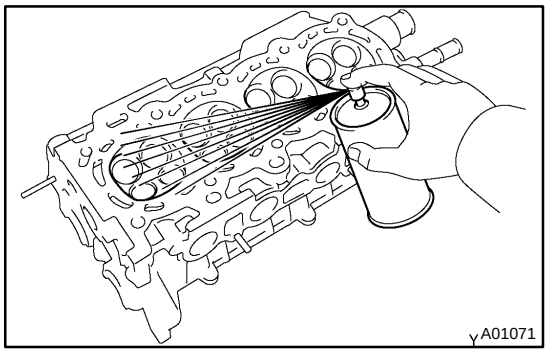

13. INSPECT CYLINDER HEAD FOR CRACKS

(a) Using a dye penetrate, check the combustion chamber, intake ports, exhaust ports and cylinder block surface for cracks.

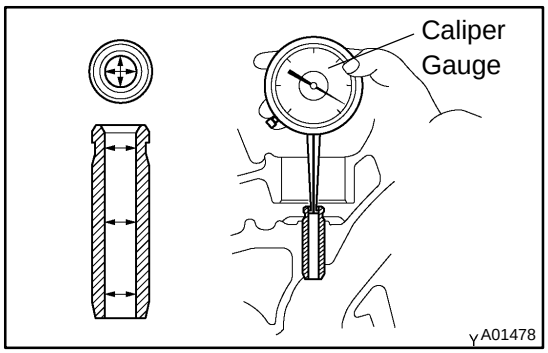

14. INSPECT VALVE GUIDE BUSHING OIL CLEARANCE

(a) Using a caliper gauge, measure the inside diameter of the guide bushing.

Busing inside diameter:
5.500 – 5.518 mm (0.2165 – 0.2172 in.)

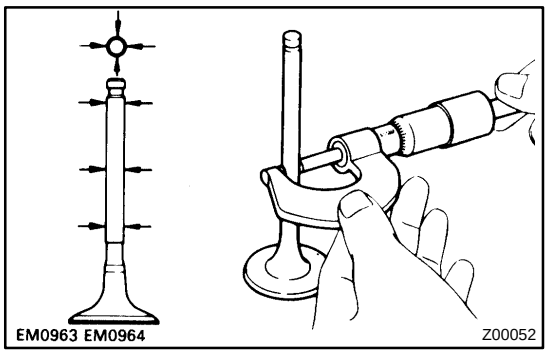

(b) Using a micrometer, measure the diameter of the valve stem.
Valve stem diameter:
Intake 5.460 – 5.475 mm (0.2145 – 0.2156 in.)
Exhaust 5.455 – 5.470 mm (0.2144 – 0.2154 in.)

(c) Subtract the valve stem diameter measurement from the guide bushing inside diameter measurement.
Standard oil clearance:
Intake 0.025 – 0.058 mm (0.0010 – 0.0023 in.)
Exhaust 0.030 – 0.063 mm (0.0012 – 0.0025 in.)
Maximum oil clearance: 0.10 mm (0.0039 in.)

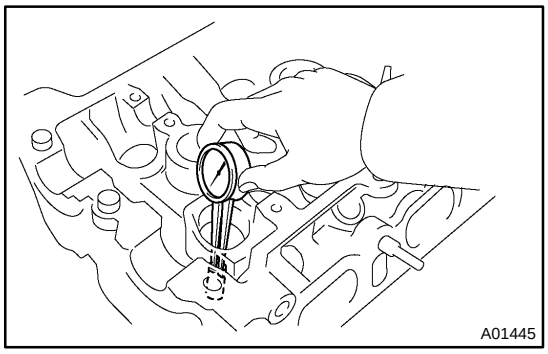

15. INSPECT VALVE GUIDE BUSH

(a) If the busing bore diameter of the cylinder head is greater than 10.506 mm (0.4136 in.), machine the bushing bore to the dimension of 10.538 – 10.556 mm (0.4149 – 0.4156 in.) to install a over size busing.
Bushing bore diameter:
10.538 – 10.556 mm (0.4149 – 0.4156 in.)

bushing size	Bushing bore diameter mm (in.)
Use STD	10.448 – 10.506 (0.4129 – 0.4136)
Use O/S 0.05	10.538 – 10.556 (0.4149 – 0.4156)

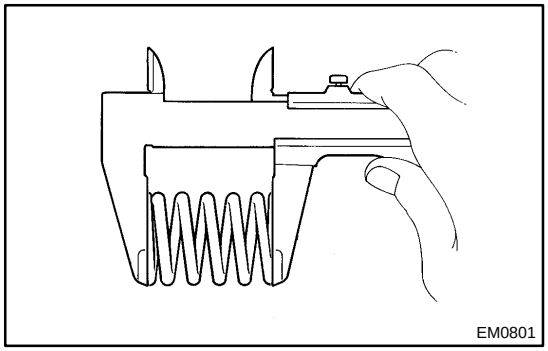

16. INSPECT INNER COMPRESSION SPRING

(a) Using a vernier caliper measure the free length of the valve spring.
Free length:
Intake 46.4 mm (1.827 in.)
Exhaust 46.5 mm (1.831 in.)

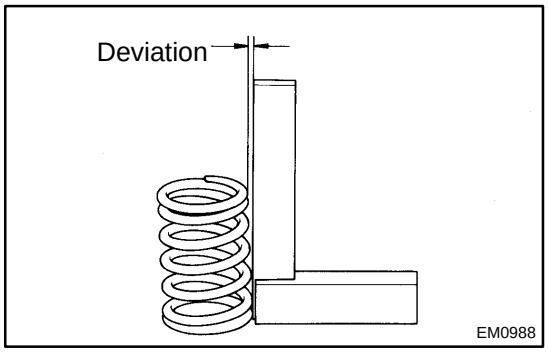

(b) Using a steel square, measure the deviation of the valve spring.
Maximum deviation: 1.6 mm (0.063 in.)
Maximum angle (reference): 2°

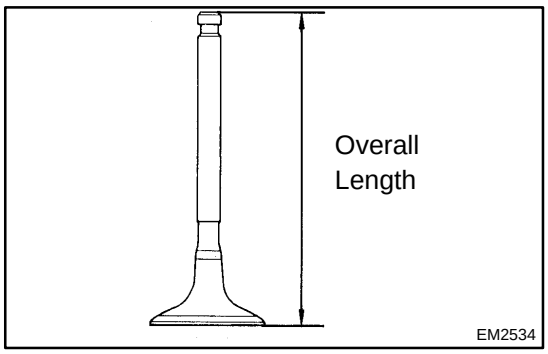

17. INSPECT INTAKE VALVE

(a) Check the valve overall length.
Standard overall length: 111.3 mm (4.382 in.)
Minimum overall length: 110.9 mm (4.366 in.)

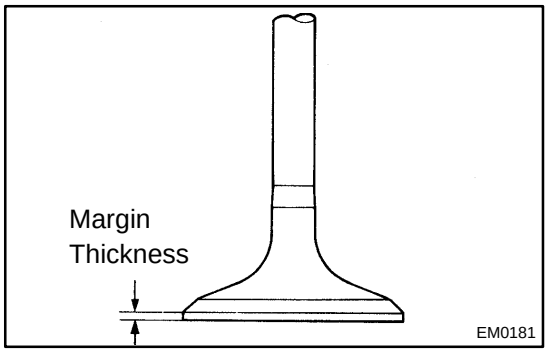

(b) Check the valve head margin thickness.
Standard margin thickness: 1.0 mm (0.039 in.)
Minimum margin thickness: 0.7 mm (0.028 in.)

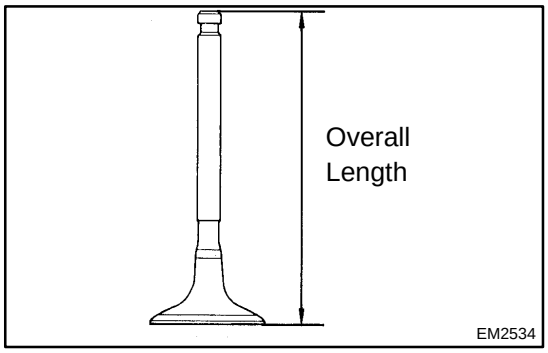

18. INSPECT EXHAUST VALVE

(a) Check the valve overall length.
Standard overall length: 111.7 mm (4.392 in.)
MInimum overall length: 111.3 mm (4.382 in.)

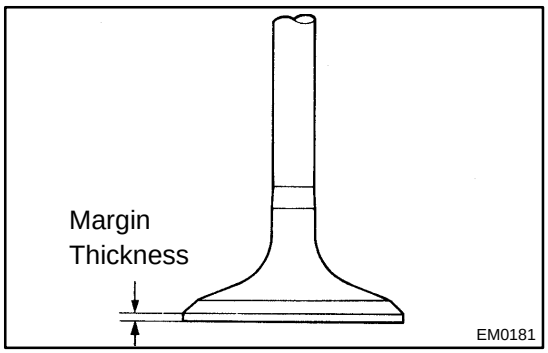

(b) Check the valve head margin thickness.
Standard margin thickness: 1.0 mm (0.039 in.)
MInimum margin thickness: 0.7 mm (0.028 in.)

19. INSPECT VALVE SEATS

(a) Apply a light coat of prussian blue (or white lead) to the valve face.

(b) Lightly press the valve against the seat.

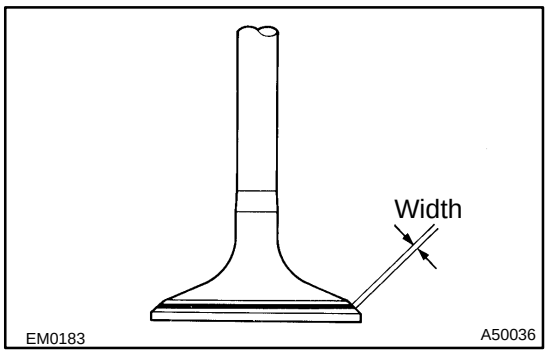

(c) Check the valve face and seat according to the following procedure.
  (1) If blue appears 360° around the face the valve is concentric. If not, replace the valve.
  (2) If blue appears 360° around the valve seat, the guide and face are concentric. If not, resurface the seat.
  (3) Check that the seat contact is in the middle of the valve face with the width between 1.0 – 1.4 mm (0.039 – 0.055 in.).

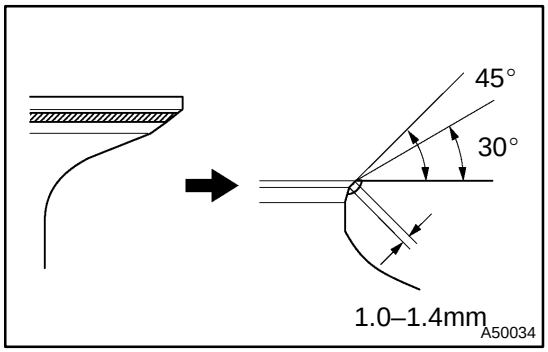

20. REPAIR VALVE SEATS

NOTICE:

Take off a cutter gradually to make smooth valve seats.

(a) If the seating is too high on the valve face, use 30° and 45°cutters to correct the seat.

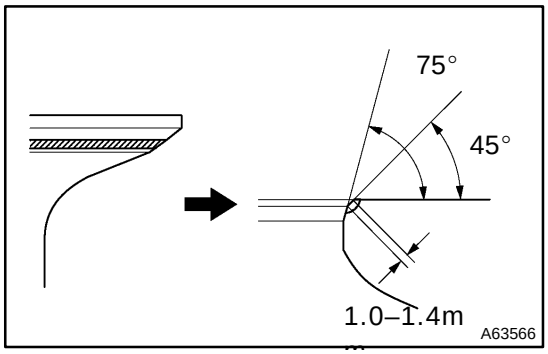

(b) If the seating is too low on the valve face, use 75° and 45° cutters to correct the seat.
(c) Hand–lap the valve and valve seat with an abrasive compound.
(d) Check the valve seating position.

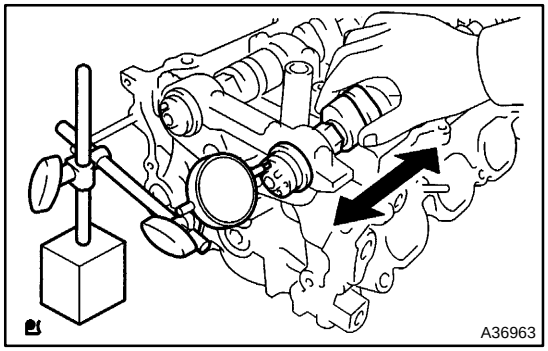

21. INSPECT CAMSHAFT THRUST CLEARANCE

(a) Install the camshafts.
(b) Using a dial indicator measure the thrust clearance while moving the camshaft back and forth.
  Standard thrust clearance:
  0.10 – 0.24 mm (0.0039 – 0.0095 in.)
  Maximum thrust clearance: 0.15 mm (0.0059 in.)
(c) If the thrust clearance is greater than maximum, replace the cylinder head. If damages are found on the camshaft thrust surfaces, the camshaft also has to be replaced.

22. INSPECT CAMSHAFT OIL CLEARANCE

(a) Clean the bearing caps and camshaft journals.
(b) Place the camshafts on the cylinder head.

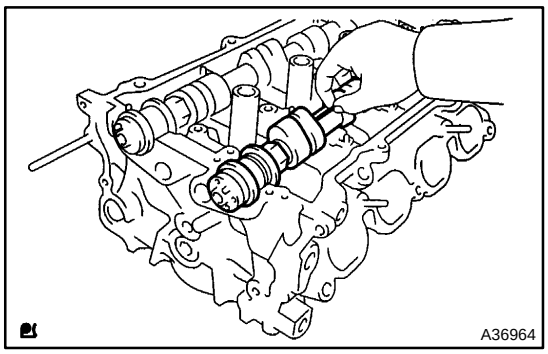

(c) Lay a strip of plastigage across each of the camshaft journal.

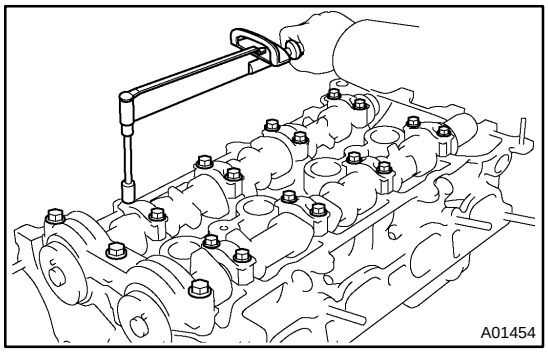

(d) Install the bearing caps (See page 14–262).
Torque: 18.5 N·m (189 kgf·cm, 14 ft·lbf)

NOTICE:
Do not turn the camshaft.

(e) Remove the bearing caps.

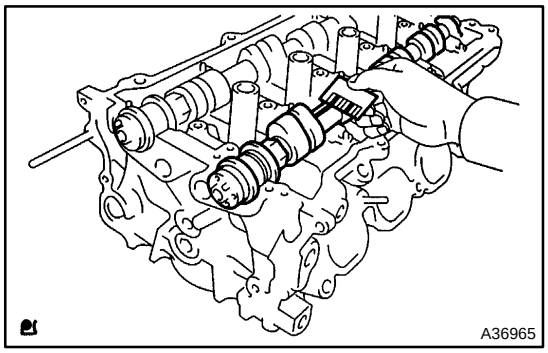

(f) Measure the plastigage at its widest point.
Standard oil clearance:
0.025 – 0.062 mm (0.0001 – 0.0024 in.)
Maximum oil clearance: 0.062 mm (0.0024 in.)

NOTICE:
Completely remove the plastigage after the measuring.

(g) If the oil clearance is greater than maximum, replace the cylinder head.

23. INSTALL STUD BOLT

(a) Install the stud bolts as shown in the illustration.

Torque:

A 9.5 N·m (97 kgf·cm, 84 in.·lbf)
B 9.5 N·m (97 kgf·cm, 84 in.·lbf)
C 5.0 N·m (51 kgf·cm, 44 in.·lbf)
D 9.5 N·m (97 kgf·cm, 84 in.·lbf)
E 9.5 N·m (97 kgf·cm, 84 in.·lbf)
F 19 N·m (194 kgf·cm, 14 ft·lbf)

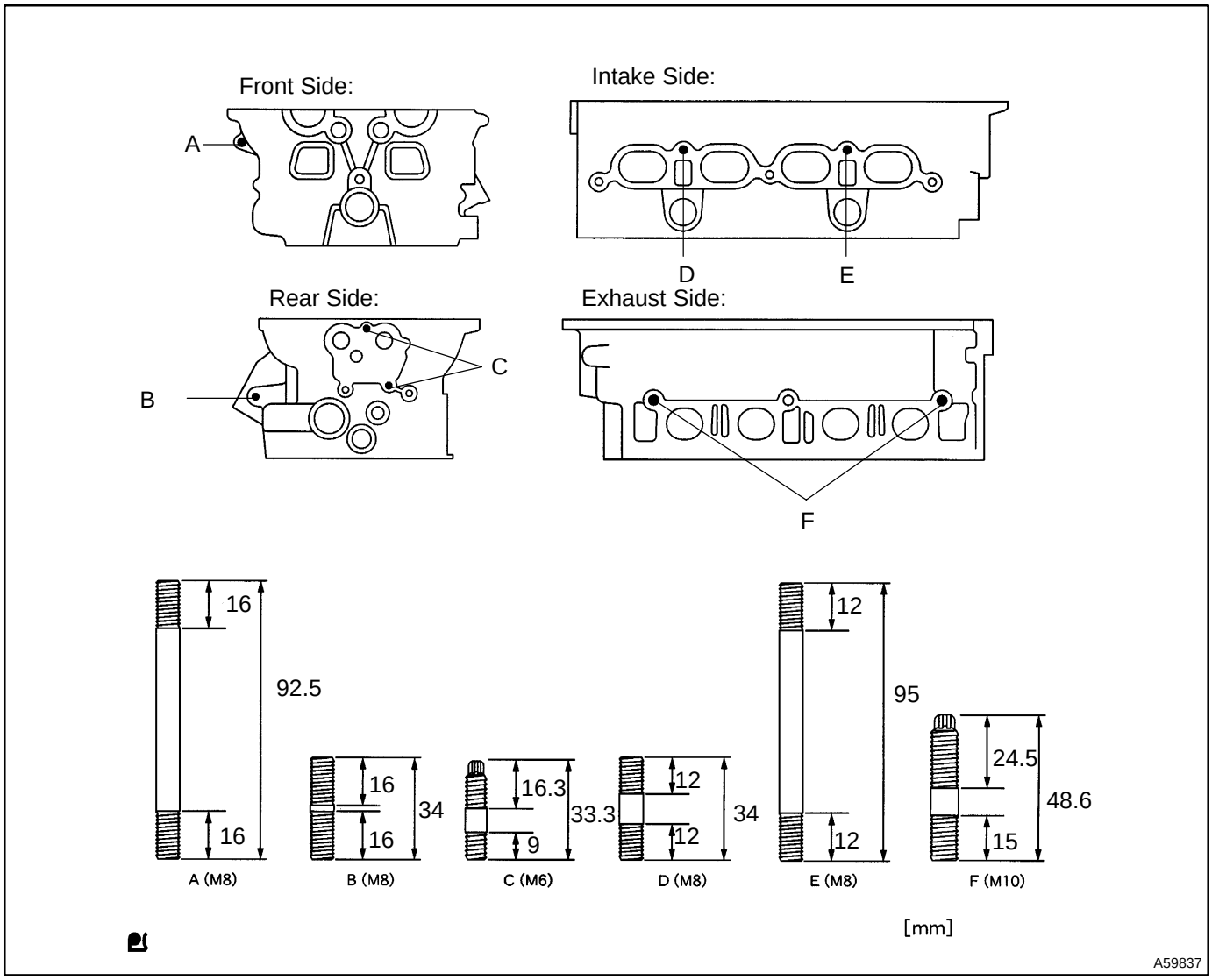

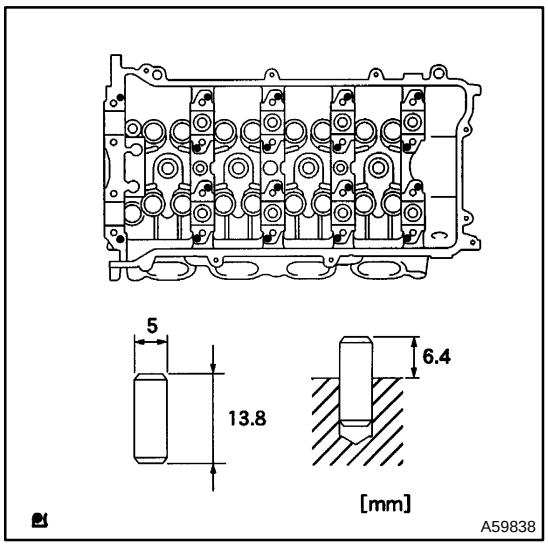

24. INSTALL RING PIN

(a) Using a plastic–faced hammer, tap in the new ring pins to the specified protrusion height.

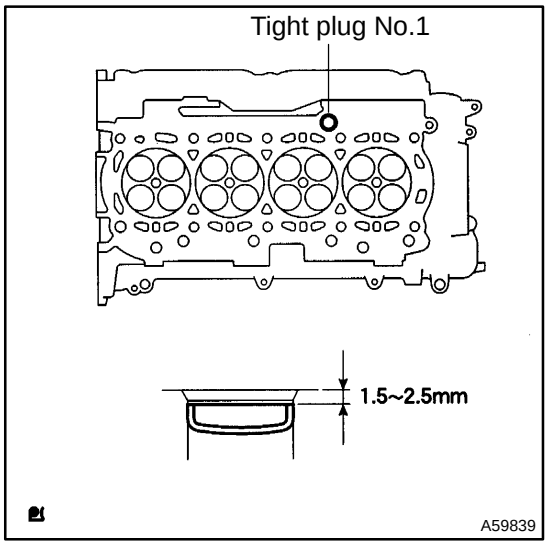

25. INSTALL TIGHT PLUG NO.1

(a) Apply adhesive around tight plugs.

Adhesive:

part No.08833 – 00070, THREE BOND 1324 or equivalent.

SST 09950–60010 (09951–00350), 09950–70010 (09951–07100)

Standard depth: 1.5 – 2.5 mm (0.0591 – 0.9843 in.)

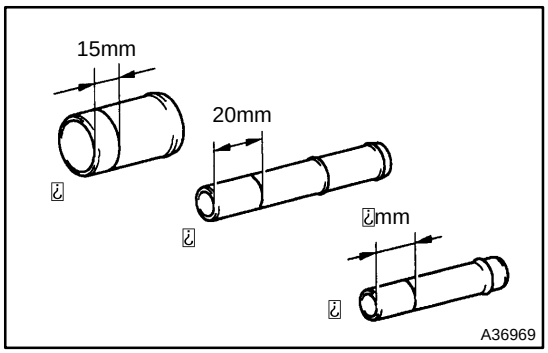

26. INSTALL UNION

(a) Mark the standard position away from the edge, onto the water hose union as shown in the illustration.

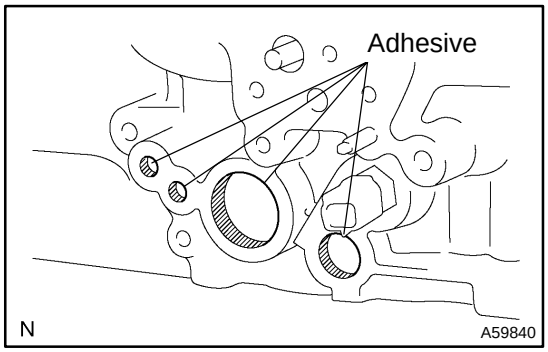

(b) Apply adhesive to the water hose union hole of the cylinder head.

Adhesive:

part No. 08833 – 00070, THREE BOND 1324 or equivalent

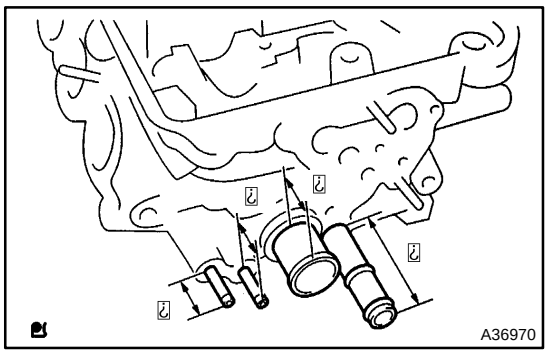

(c) Using a press press in a new water hose union until the standard marks come to the level of the cylinder head surface.

Standard protrusion:
A 29 mm (1.14 in.)
B 69.8 mm (2.748 in.)
C 24 mm (0.95 in.)

NOTICE:

- **Install the water hose union within 3 minutes after applying adhesive.**
- **Do not put into coolant within an hour after installing.**

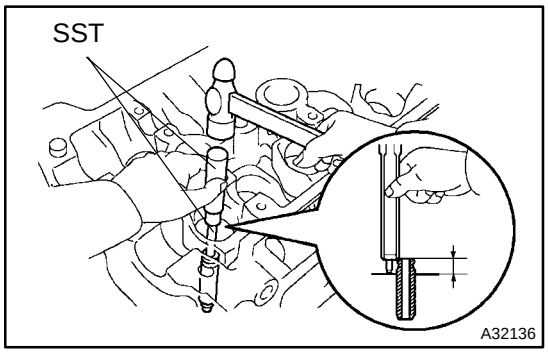

27. INSTALL VALVE GUIDE BUSH

(a) Gradually heat the cylinder head to 80 – 100°C (176 – 212°F).

(b) Using SST and a hammer, tap in a new guide bushing to the specified protrusion height.

SST 09201–10000, 09201–01055, 09950–70010 (09951–07100)

Protrusion height: 15.3 – 15.7 mm (0.602 – 0.618 in.)

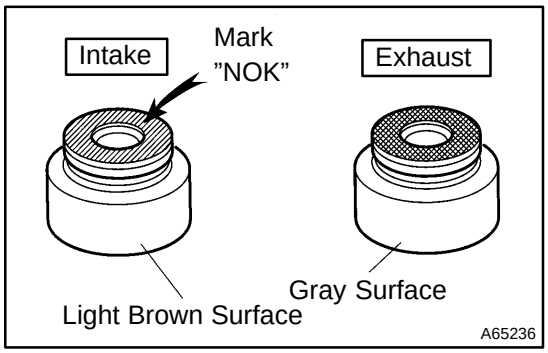

28. INSTALL VALVE STEM OIL O SEAL OR RING

(a) Apply a light coat of engine oil the valve stem seals.

NOTICE:

Be very careful to assemble the oil seal for intake and exhaust. Assembling the wrong one may cause a failure.

HINT:

The intake valve oil seal is light brown and the exhaust valve oil seal is gray.

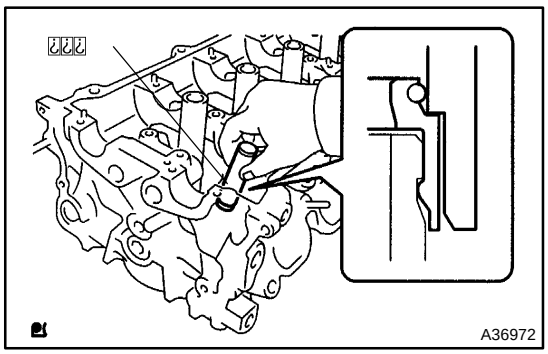

(b) Using SST, push in a new oil seal.

SST 09201–41020

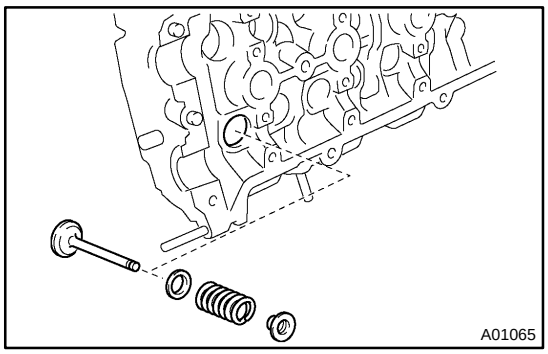

29. INSTALL INNER COMPRESSION SPRING

(a) Install the valve, spring seat, valve spring, and spring retainer.

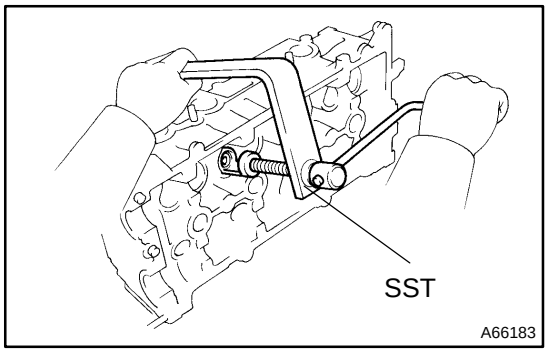

(b) Using SST, compress the valve spring and place the retainer locks around the valve stem.
SST 09202–70020

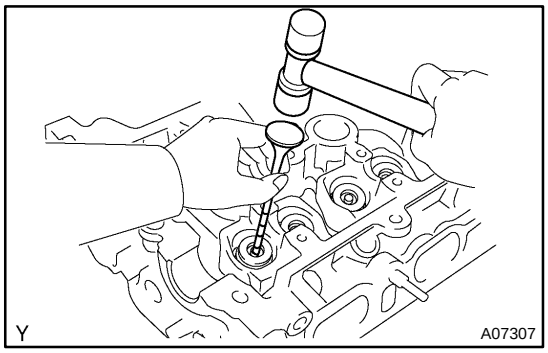

(c) Using a plastic–faced hammer and the valve stem (not in use) tip wound with vinyl tape, lightly tap the valve stem tip to ensure a proper fit.

NOTICE:
Be careful not to damage the valve stem tip.

30. INSTALL VALVE ADJUSTING SHIM

(a) Apply a light coat of engine oil on the adjusting shim, install the top of the valve stem.

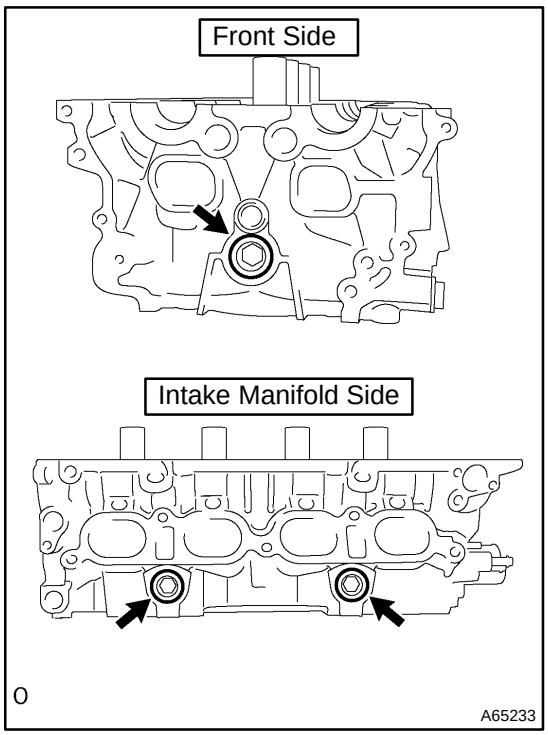

31. INSTALL W/HEAD TAPER SCREW PLUG NO.1

(a) Using hexagon socket wrench (14), install the taper screw plug with a new gasket.
Torque: 78 N·m (796 kgf·cm, 58 ft·lbf)

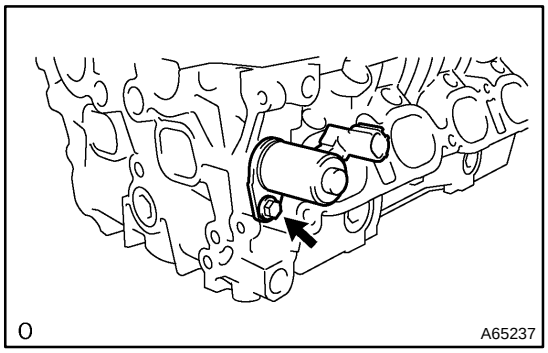

32. INSTALL CAMSHAFT TIMING OIL CONTROL VALVE ASSY

(a) Install the oil control valve with a bolt.
Torque: 9.0 N·m (92 kgf·cm, 80 ft·lbf)

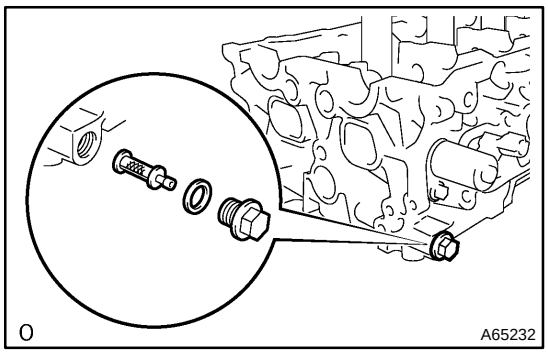

33. INSTALL OIL CONTROL VALVE FILTER

(a) Confirm that the filter is clear.
(b) Place a new gasket on the bolt and install the filter.(Front side)
Torque: 29 N·m (296 kgf·cm, 22 ft·lbf)

CYLINDER BLOCK (2ZZ–GE)

COMPONENTS

140RK–01

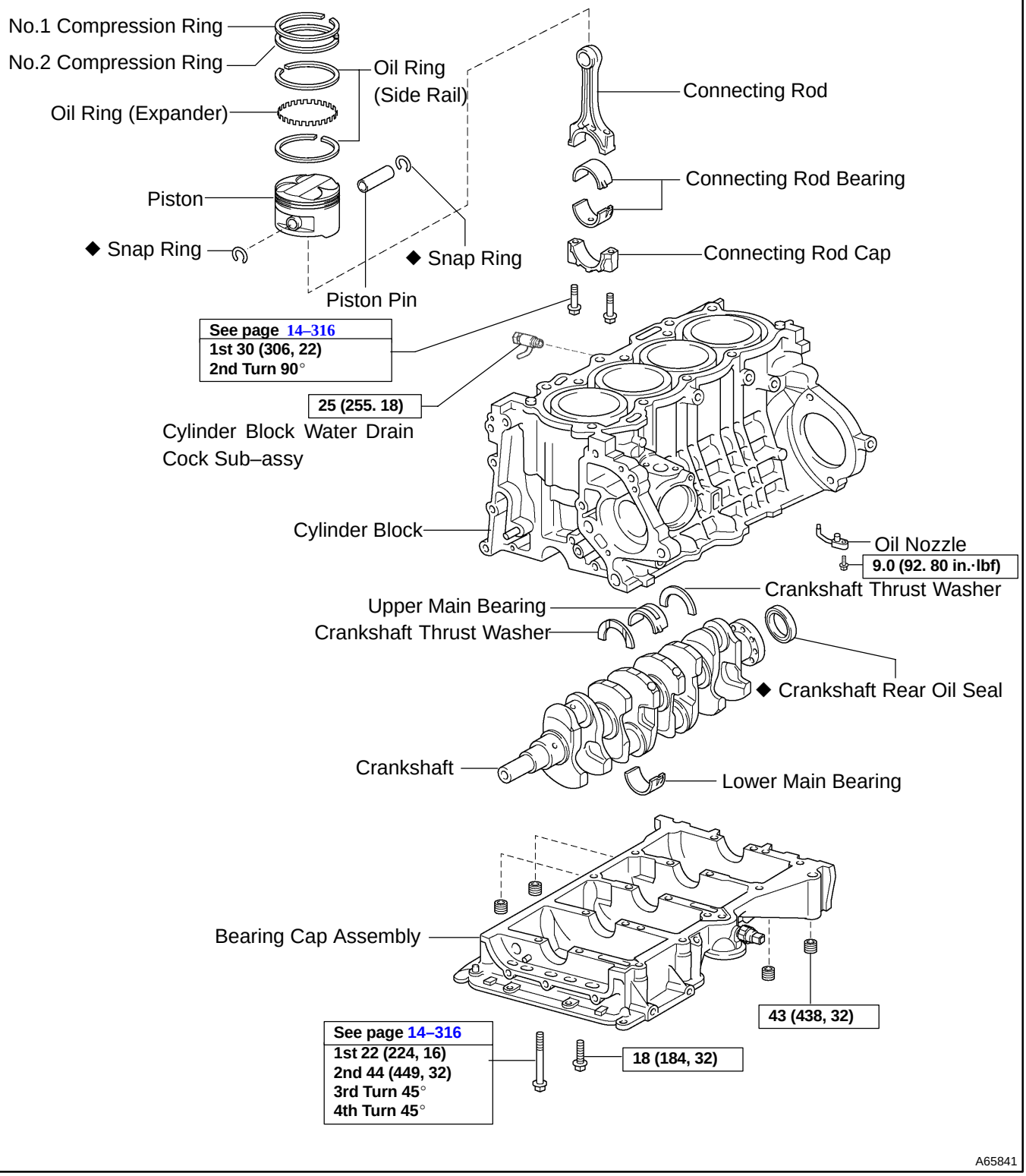

A65841

140RL–01

OVERHAUL

1. REMOVE CYLINDER BLOCK WATER DRAIN COCK SUB–ASSY

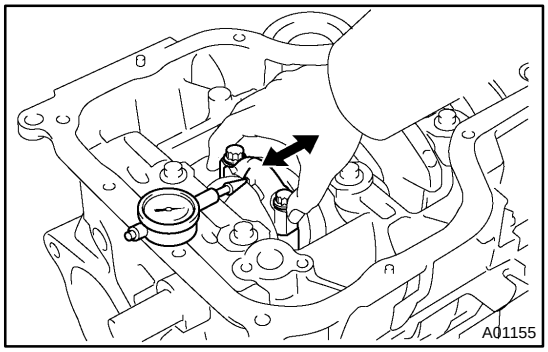

2. INSPECT CONNECTING ROD THRUST CLEARANCE

(a) Using a dial indicator, measure the thrust clearance while moving the connecting rod back and forth.

Standard thrust clearance:
0.160 – 0.342 mm (0.0063 – 0.0135 in.)
Maximum thrust clearance: 0.342 mm (0.0135 in.)

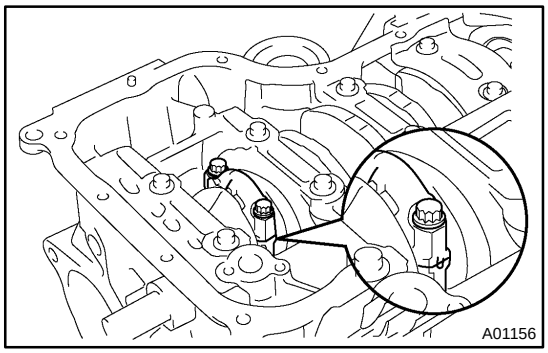

3. INSPECT CONNECTING ROD BEARING OIL CLEARANCE

NOTICE:

Do not turn the crankshaft.

(a) Using marking paint, write the matched cylinder number on each connecting rod and cap.

HINT:

The match marks on the connecting rods and caps are for ensuring correct reassembly.

(b) Using SST, remove the 2 connecting rod cap bolts.
SST 09205–16010

(c) Clean the crank pin and bearing.

(d) Check the crank pin and bearing for pitting and scratches.

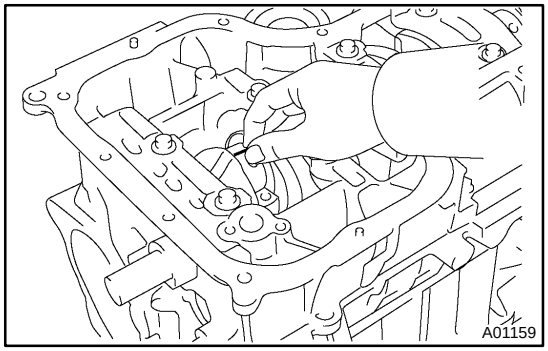

(e) Lay a strip of plastigage across the crank pin.

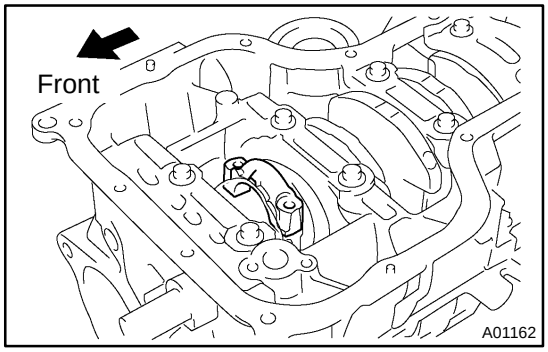

(f) Check that the protrusion of the connecting rod cap is facing in the correct direction.

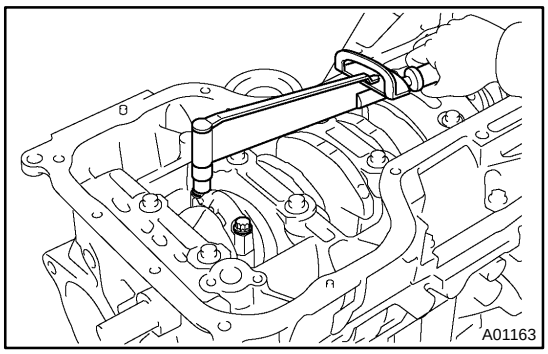

(g) Apply a light coat of engine oil on the threads and under the heads of the connecting rod cap bolts.
(h) Using SST, tighten the bolts in several passes by the specified torque.
SST 09205–16010
Torque: 30 N·m (306 kgf·cm, 22 ft·lbf)

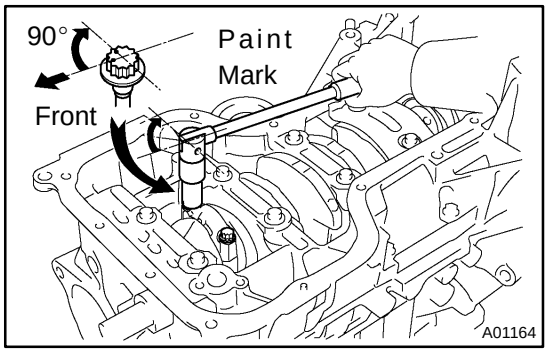

(i) Mark the front of the connecting cap bolts with paint.
(j) Retighten the cap bolts by 90 ° as shown in the illustration.
(k) Check that the crankshaft turns smoothly.
(l) Remove the 2 bolts, connecting rod cap and lower bearing.

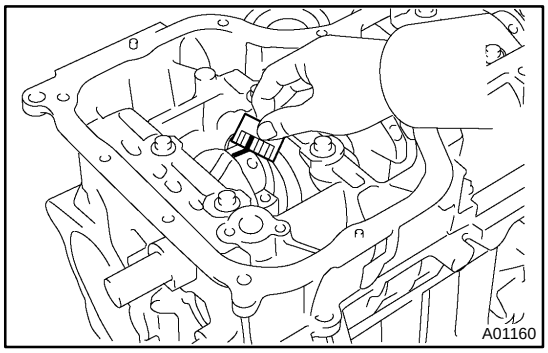

(m) Measure the plastigage at its widest point.
Standard oil clearance:
0.028 – 0.052 mm (0.0011 – 0.0020 in.)
Maximum oil clearance: 0.080 mm (0.0031 in.)

NOTICE:
Remove the plastigage completely after the measurement.

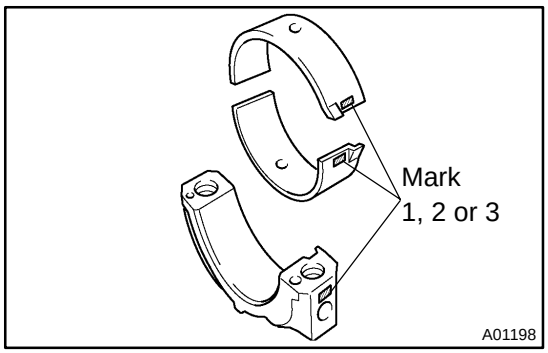

(n) If replacing a bearing, select a new one having the same number as marked on the connecting rod. There are 3 sizes of standard bearings, marked ”1”, ”2” and ”3” accordingly.
Reference:
Standard bearing center wall thickness

Item	Mark	mm (in.)
Connecting rod large end bore diameter	1 2 3	48.000 – 48.008 (1.8898 – 1.8901) 48.008 – 48.016 (1.8901 – 1.8904) 48.016 – 48.024 (1.8904 – 1.8907)
Connecting rod bearing thickness	1 2 3	1.482 – 1.486 (0.0583 – 0.0585) 1.486 – 1.490 (0.0585 – 0.0587) 1.490 – 1.494 (0.0587 – 0.0588)
Crankshaft pin outer diameter	–	44.992 – 45.000 (1.7713 – 1.7717)

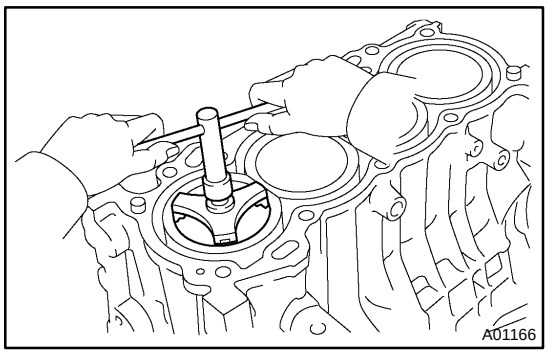

4. REMOVE PISTON SUB–ASSY W/CONNECTING ROD

(a) Push the piston, connecting rod assembly and upper bearing through the top of the cylinder block.

HINT:

- Keep the bearing, connecting rod and cap together.
- Arrange the piston and connecting rod assemblies in the correct order.

5. REMOVE CONNECTING ROD BEARING

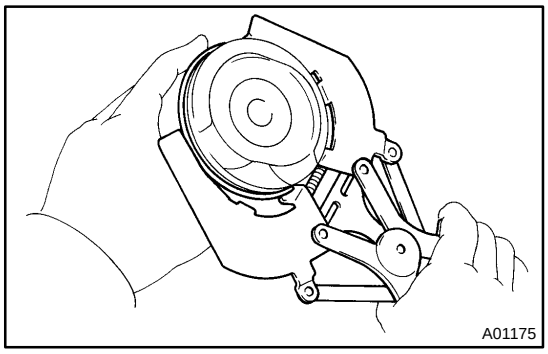

6. REMOVE PISTON RING SET

HINT:

Take care not to misplace the piston rings on both the match with the piston and the direction of the rings.

(a) Using a piston ring expander, remove the 2 compression rings.

(b) Remove the 2 side rails and oil ring by hand.

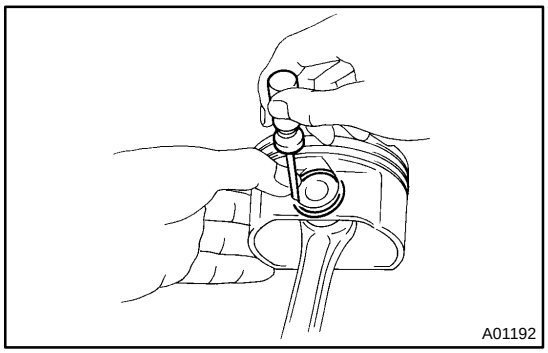

7. REMOVE PISTON PIN HOLE SNAP RING

(a) Using a small screwdriver, pry out the 2 snap rings.

8. REMOVE W/PIN PISTON SUB–ASSY

(a) Remove the pin and connecting rod from the piston.

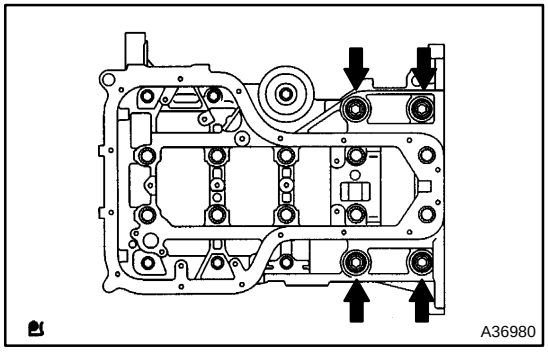

9. REMOVE CRANKSHAFT BEARING CAP SUB–ASSY

(a) Remove the 4 screws plugs from the bearing cap sub–assembly.

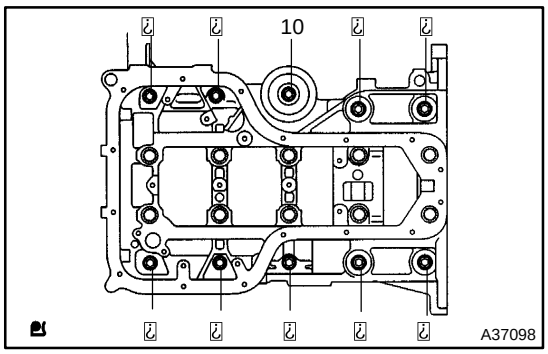

(b) Remove the 10 hexagon head bearing cap sub–assembly bolts.

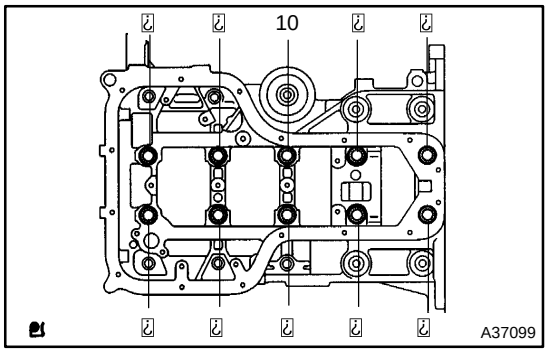

(c) Uniformly loosen the 10 bearing cap sub–assembly bolts, in several passes, in the sequence shown in the illustration.

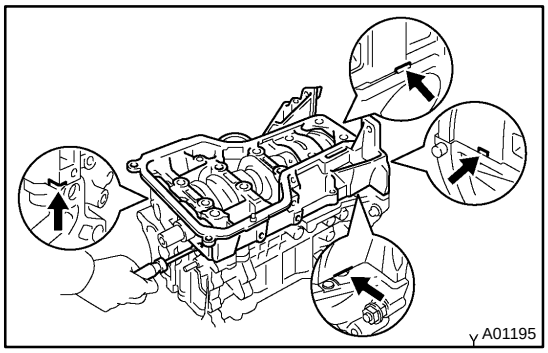

(d) Using a screwdriver, remove the bearing cap sub–assembly by prying the indicated portions between the cylinder block and bearing cap sub–assembly. Remove the 5 lower main bearings.

NOTICE:

Be careful not to damage the contact surfaces of the cylinder block and bearing cap sub–assembly.

SST 09011–38121

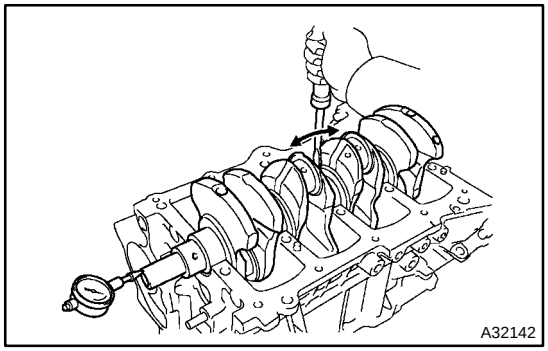

10. INSPECT CRANKSHAFT THRUST CLEARANCE

(a) Using a dial indicator, measure the thrust clearance while prying the crankshaft back and forth with a screwdriver.

Standard thrust clearance:
0.04 – 0.24 mm (0.0016 – 0.0094 in.)
Maximum thrust clearance: 0.24 mm (0.0094 in.)

(b) If the thrust clearance is greater than maximum, measure the thrust washer thickness. If the thickness is not specified, replace the thrust washer.

Thrust washer thickness:
2.430 – 2.480 mm (0.0957 – 0.0976 in.)

11. REMOVE CRANKSHAFT

12. REMOVE CRANKSHAFT THRUST WASHER UPPER

13. REMOVE CRANKSHAFT BEARING

NOTICE:

Arrange the main bearings and thrust washers in the correct order.

14. REMOVE STUD BOLT

15. REMOVE SUB–ASSY OIL NOZZLE NO.1

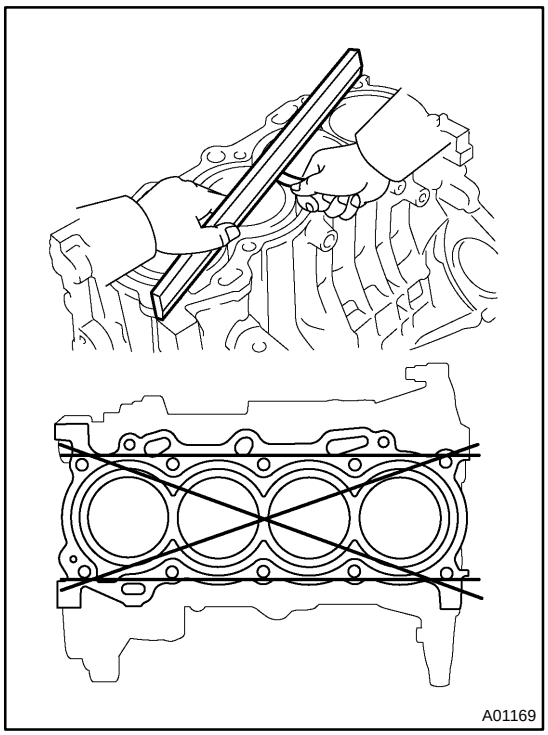

16. INSPECT CYLINDER BLOCK FOR FLATNESS

(a) Using a precision straight edge and feeler gauge, measure the surface contacting the cylinder head gasket for warpage.

Maximum warpage: 0.05 mm (0.0020 in.)

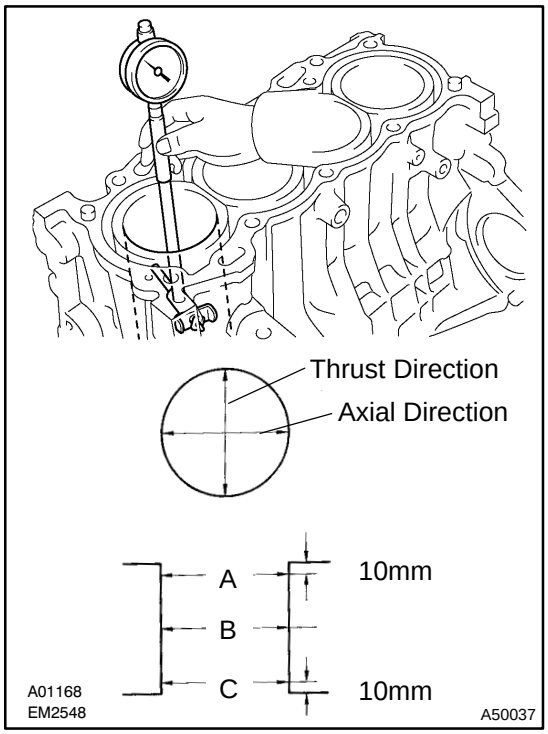

17. INSPECT CYLINDER BORE

(a) Using a cylinder gauge, measure the cylinder bore diameter at positions A, B and C in the thrust and axial directions.

Standard diameter:
82.000 – 82.013 mm (3.2283 – 3.2289 in.)
Maximum diameter: 82.013 mm (3.2289 in.)

(b) If the diameter is greater than the maximum, replace the cylinder block.

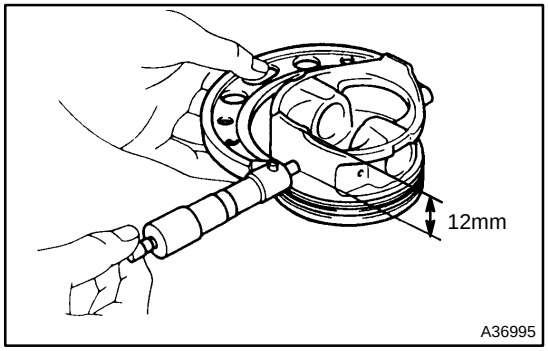

18. INSPECT PISTON DIAMETER

(a) Using a micrometer, measure the piston diameter at a right angle to the piston pin hole, and at the piston of 12 mm (0.472 in.) from the piston skirt.

Piston diameter:
81.975 – 81.993 mm (3.2274 – 3.2281 in.)

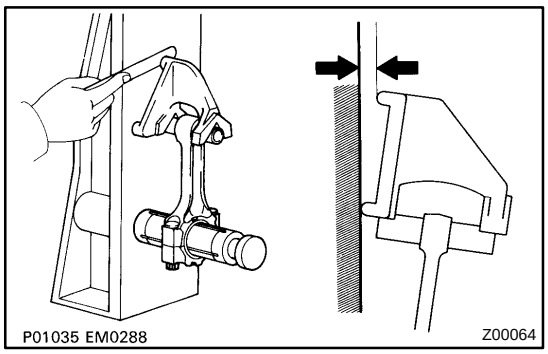

19. INSPECT CONNECTING ROD SUB–ASSY

(a) Using a rod aligner and feeler gauge, check the connecting rod alignment.

(1) Check for out–of–alignment.

Maximum out–of alignment:

0.05 mm (0.0020 in.) per 100 mm (3.94 in.)

If out–of alignment is greater than maximum, replace the connecting rod assembly.

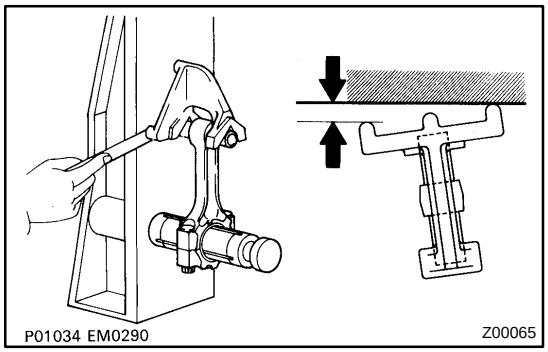

(2) Check for twist.

Maximum twist:

0.05mm (0.0020 in.) per 100 mm (3.94 in.)

If twist is greater than maximum, replace the connecting rod assembly.

20. INSPECT PISTON CLEARANCE

(a) Subtract the piston diameter measurement from the cylinder bore diameter measurement.
Standard oil clearance: 0.007 – 0.038 mm (0.0003 – 0.0015 in.)
Maximum oil clearance: 0.10 mm (0.0039 in.)

(b) If the oil clearance is greater than maximum, replace all the 4 pistons. If necessary, replace the cylinder block.

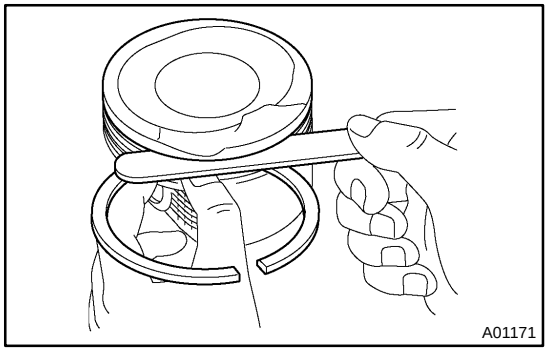

21. INSPECT RING GROOVE CLEARANCE

(a) Using a feeler gauge, measure the clearance between the new piston ring and the wall of the ring groove.
Ring groove clearance:
No.1: 0.020 – 0.070 mm (0.0009 – 0.0028 in.)
No.2: 0.030 – 0.070 mm (0.0012 – 0.0028 in.)

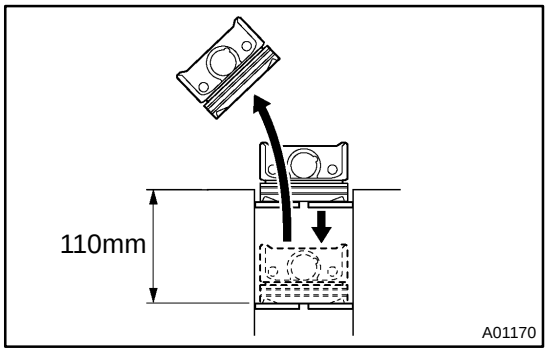

22. INSPECT PISTON RING END GAP

(a) Using a piston, push the piston ring a little beyond the bottom of the ring travel, that means 110 mm (4.33 in.) from the top of the cylinder block.

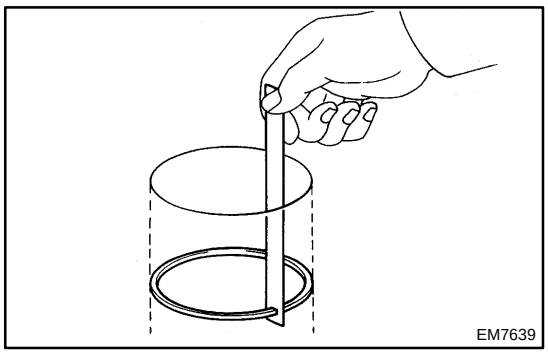

(b) Using a feeler gauge, measure the end gap.
Standard end gap:
No. 1: 0.25 – 0.35 mm (0.0098 – 0.0138 in.)
No. 2: 0.35 – 0.50 mm (0.0138 – 0.0197 in.)
Oil (side rail): 0.15 – 0.40 mm (0.0059 – 0.0157 in.)
Maximum end gap:
No. 1: 1.05 mm (0.0413 in.)
No. 2: 1.20 mm (0.0472 in.)
Oil (side rail): 1.05mm (0.0413 in.)

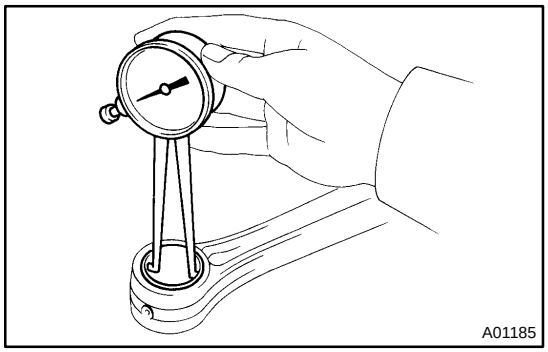

23. INSPECT PISTON PIN

(a) Using a caliper gauge, measure the inside diameter of the connecting rod bushing.
Bushing inside diameter:
20.011–20.023 mm (0.7878 – 0.7883 in.)

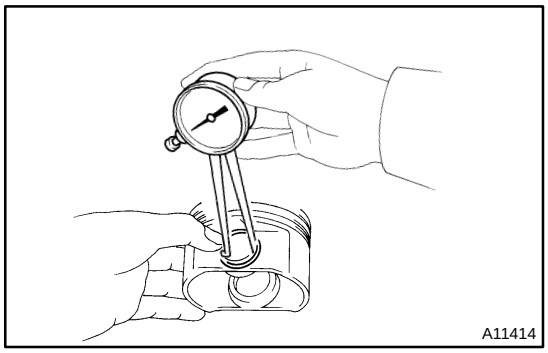

(b) Using a caliper gauge, measure the inside diameter of the piston bushing.
Bushing inside diameter:
20.013–20.025 mm (0.7879 – 0.7884 in.)

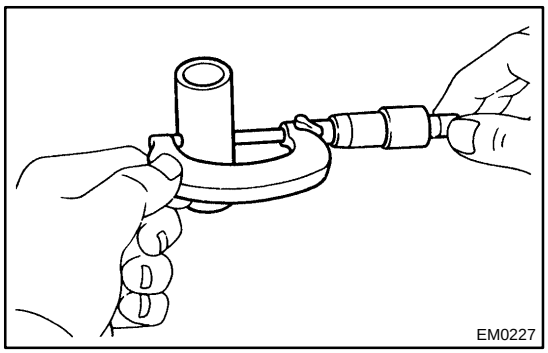

(c) Using a micrometer, measure the piston pin diameter.
Piston pin diameter:
20.004 – 20.016 mm (0.7876 – 0.7880 in)

(d) Subtract the piston pin diameter measurement from the bushing inside diameter measurement.
Standard oil clearance:
Piston x Piston pin
0.005 – 0.013 mm (0.0002 – 0.0005 in.)
Piston x Connecting rod
0.005 – 0.009 mm (0.0002 – 0.0004 in.)

If the oil clearance is greater than maximum. replace the connecting rod assembly. If necessary, replace the piston and piston pin as a set.

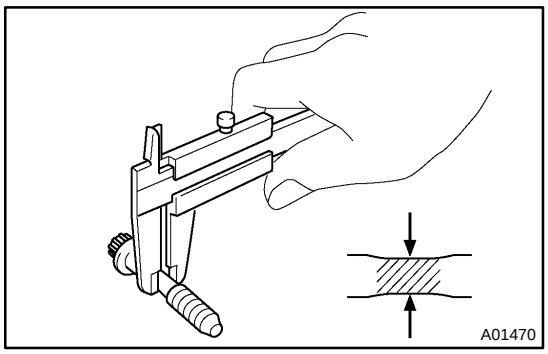

24. INSPECT CONNECTING ROD BOLT

(a) Using a vernier caliper, measure the tension portion diameter of the bolts.
Standard diameter:
6.6 – 6.7 mm (0.260 – 0.264 in.)
Maximum diameter: 6.7 mm (0.263 in.)

(b) If the diameter is less than minimum, replace the bolt.

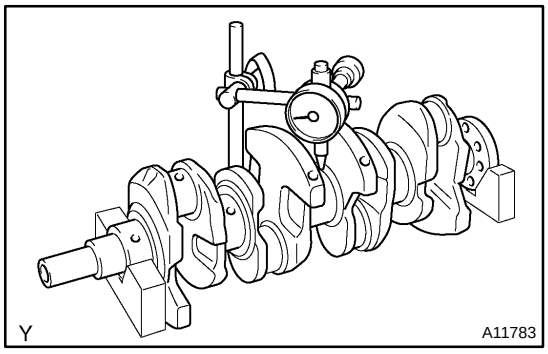

25. INSPECT CRANKSHAFT

(a) Using a dial indicator and V–blocks, measure the circle runout, as shown in the illustration.
Maximum circle runout: 0.03 mm (0.0012 in.)

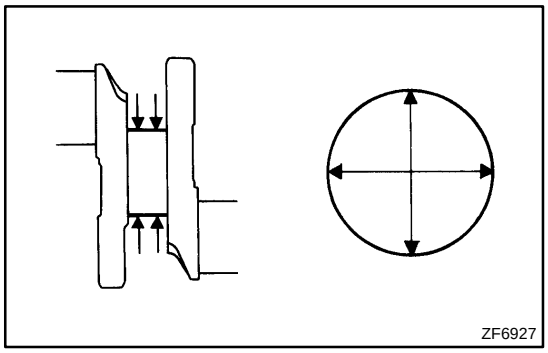

(b) Using a micrometer, measure the diameter of each main journal at the points shown in the illustration.
Diameter: 47.988 – 48.000 mm (1.8893 – 1.8898 in.)

(c) Check each main journal for taper and out–of–round as shown.
Maximum taper and out–of–round:
0.02 mm (0.0008 in.)

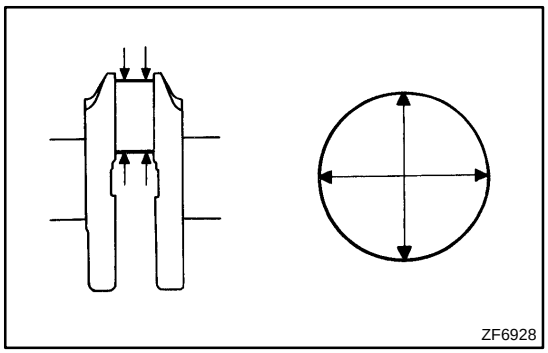

(d) Using a micrometer, measure the diameter of each crank pin at the points shown in the illustration.
Diameter: 44.992 – 45.000 mm (1.7713 – 1.7717 in.)

(e) Check each crank pin for taper and out–of–ruond as shown.
Maximum taper and out–of–round:
0.02 mm (0.0008 in.)

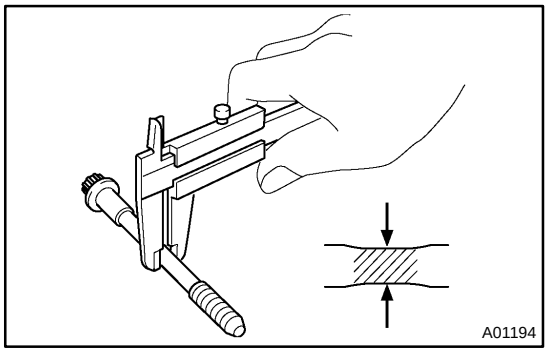

26. INSPECT CRANKSHAFT BEARING CAP BOLT

(a) Using vernier caliper, measure the tension portion diameter of the bolts.
Standard diameter: 7.3 – 7.5 mm (0.287 – 0.295 in.)
Minimum diameter: 7.3 mm (0.287 in.)

(b) If the diameter is less than minimum, replace the bolt.

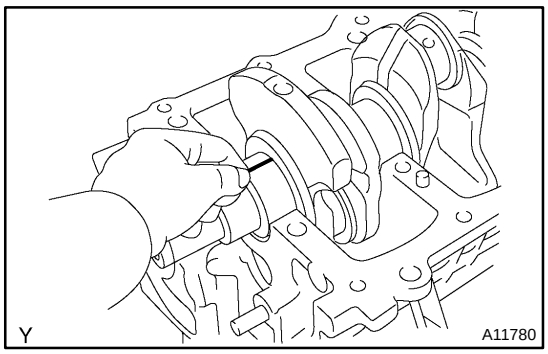

27. INSPECT CRANKSHAFT OIL CLEARANCE

(a) Clean each main journal and bearing.

(b) Place the crankshaft on the cylinder block.

(c) Lay a strip of plastigage across each journal.

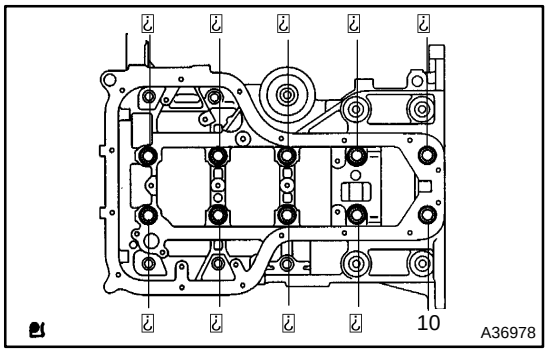

(d) Using socket wrench (12), tighten the bolts in several passes, in the sequence shown, by the specified torque.
Torque: 22 N·m (224 kgf·cm, 16 ft·lbf)

(e) Using socket wrench (12), retighten the bolts in several passes, in the sequence shown, by the specified torque.
Torque: 44 N·m (449 kgf·cm, 32 ft·lbf)

(f) Mark the front of the bearing cap sub–assembly bolts with paint.

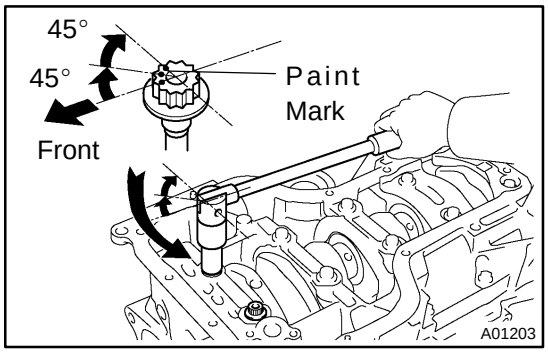

(g) Retighten the bearing cap sub–assembly bolts by 45 ° twice, in the numerical order shown.

(h) Check that the painted mark is now at a 90 ° angle to the front.

NOTICE:
Do not turn the crankshaft.

(i) Remove the bearing cap sub–assembly.

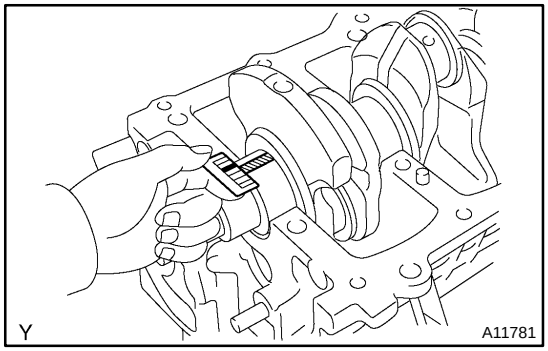

(j) Measure the plastigage at its widest point.
Standard oil clearance:
0.016 – 0.032 mm (0.0006 – 0.0013 in.)
Maximum oil clearance: 0.08 mm (0.0031 in.)

NOTICE:
Completely remove the plastigage

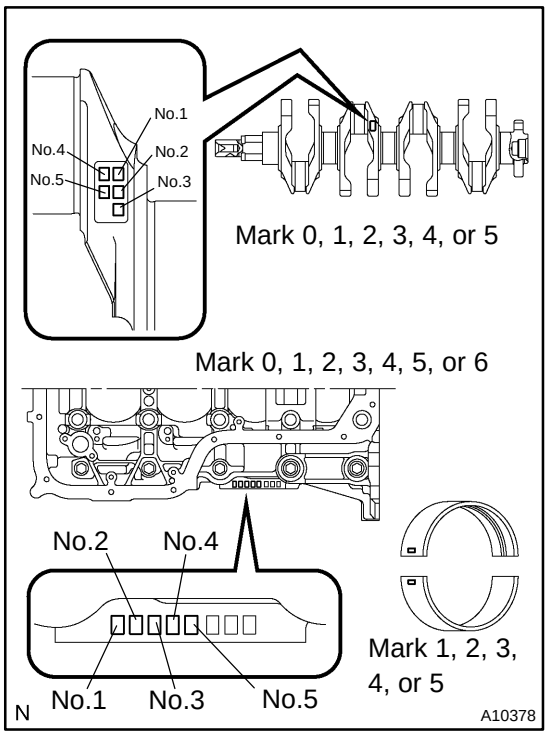

(k) If using standard bearing, replace it with one having the same number. If the number of the bearing cannot be determined, refer to the following table to select bearing.

Standard bearings selection chart

Cylinder block Number mark	Crank shaft number mark					
	0	1	2	3	4	5
0	1	1	1	2	2	2
1	1	1	2	2	2	3
2	1	2	2	2	3	3
3	2	2	2	3	3	3
4	2	3	3	3	4	4
5	3	3	3	4	4	4
6	3	3	4	4	4	5

HINT:
Cylinder block ”4”, Crank shaft ”3”, Use bearing ”3”

Item	Mark	mm (in.)
Cylinder block main journal bore diameter	”0”	52.000 – 52.003 (2.0472 – 2.0473)
	”1”	52.003 – 52.005 (2.0473 – 2.0474)
	”2”	52.005 – 52.007 (2.0474 – 2.0475)
	”3”	52.007 – 52.010 (2.0475 – 2.0476)
	”4”	52.010 – 52.012 (2.0476 – 2.0477)
	”5”	52.012 – 52.014 (2.0477 – 2.0478)
	”6”	52.014 – 52.016 (2.0478 – 2.0479)
Crankshaft main journal diameter	”0”	47.998 – 48.000 (1.8897 – 1.8898)
	”1”	47.996 – 47.998 (1.8896 – 1.8897)
	”2”	47.994 – 47.996 (1.8895 – 1.8896)
	”3”	47.992 – 47.994 (1.8894 – 1.8895)
	”4”	47.990 – 47.992 (1.8893 – 1.8894)
	”5”	47.988 – 47.990 (1.8892 – 1.8893)
Standard bearing center wall thickness	”1”	1.989 – 1.992 (0.0783 – 0.0784)
	”2”	1.992 – 1.995 (0.0784 – 0.0785)
	”3”	1.995 – 1.998 (0.0785 – 0.0787)
	”4”	1.998 – 2.001 (0.0787 – 0.0788)
	”5”	2.001 – 2.004 (0.0788 – 0.0789)

28. INSTALL STUD BOLT

Torque:
A 5.0 N·m (51 kgf·cm, 44 in·lbf)
B 5.0 N·m (51 kgf·cm, 44 in·lbf)
C 5.0 N·m (51 kgf·cm, 44 in·lbf)
D 19.0 N·m (194 kgf·cm, 14 ft·lbf)
E 11N·m (112 kgf·cm, 8 ft·lbf)

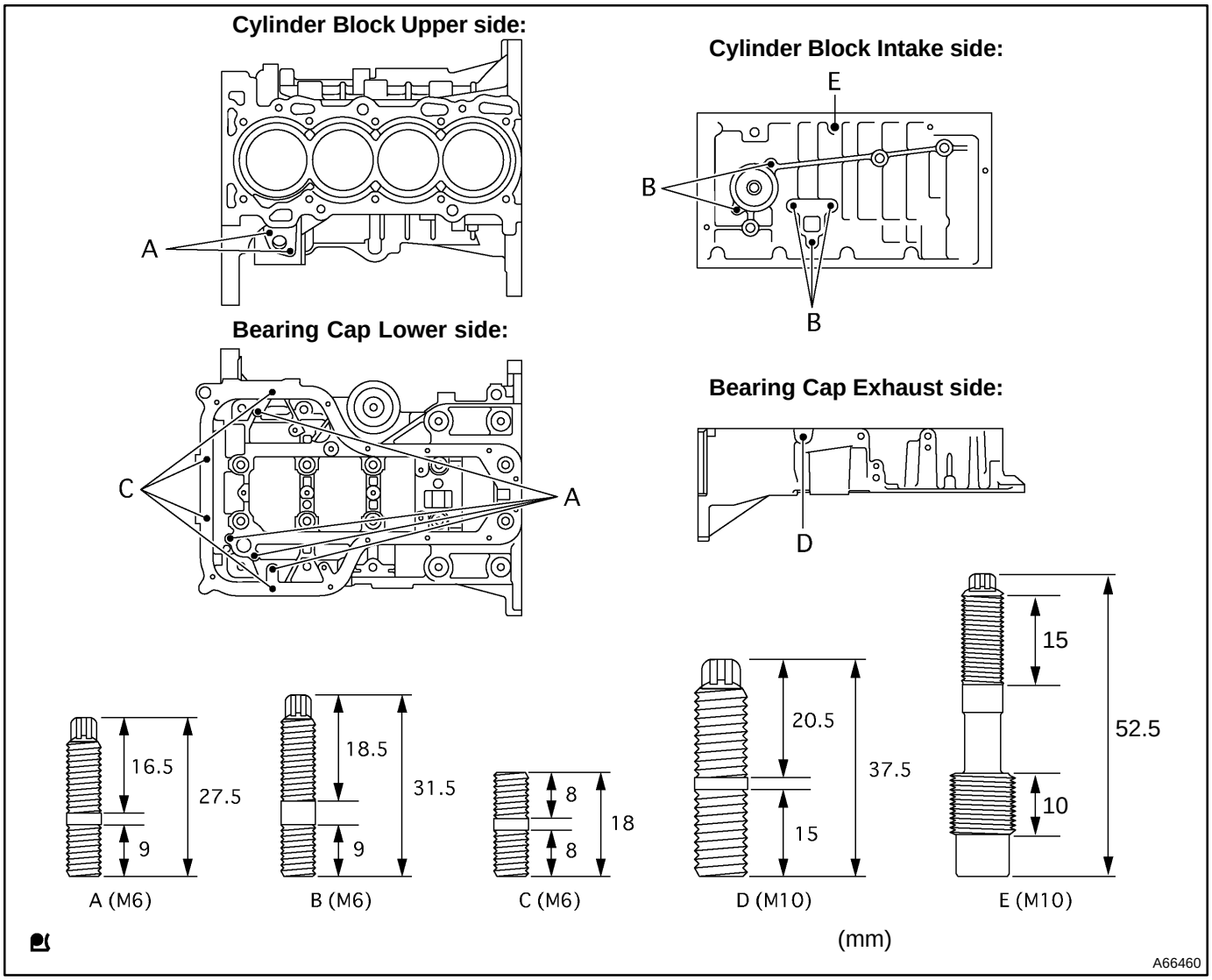

29. INSTALL RING PIN

(a) Using a plastic–faced hammer, tap in the new ring pins to the specified protrusion height.

Protrusion height:

A 7 mm (0.2756 in.)

B 6 mm (0.2362 in.)

C 10 mm (0.3973 in.)

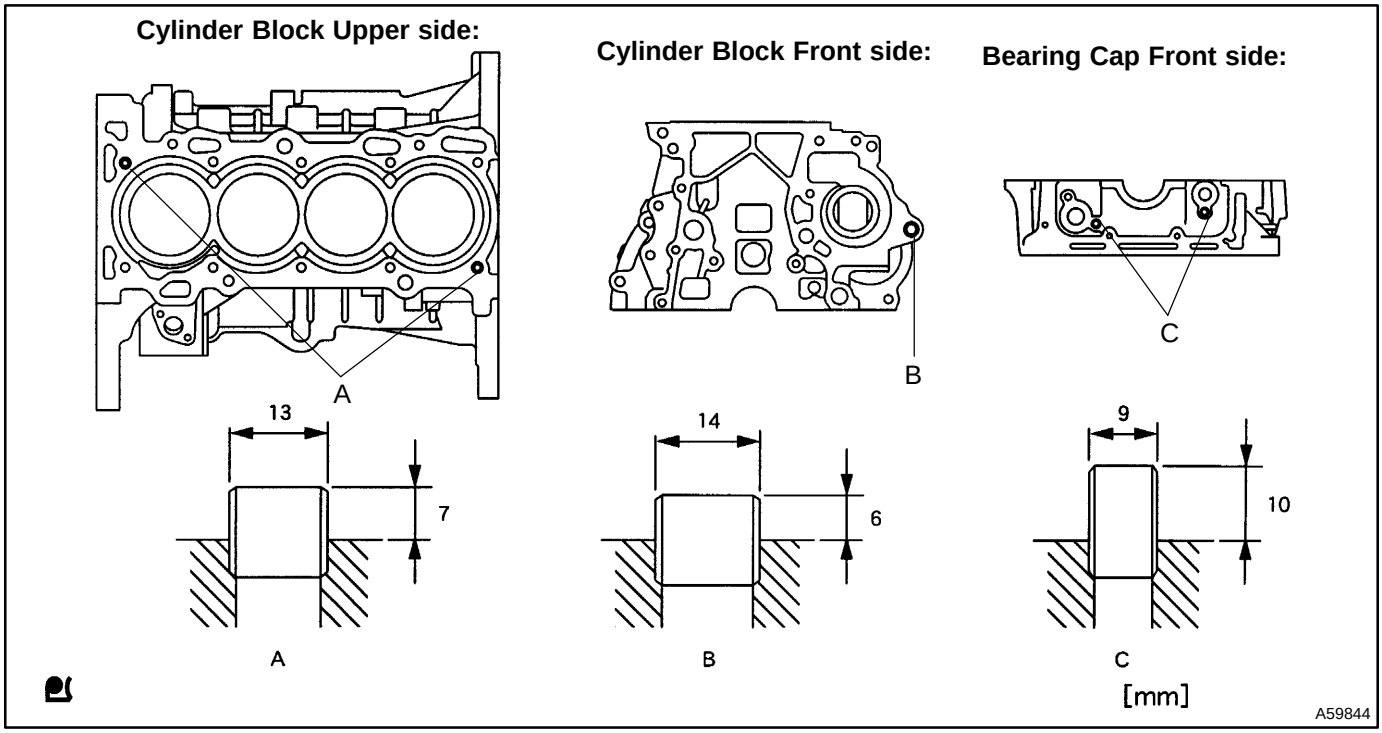

30. INSTALL STRAIGHT PIN

(a) Using a plastic–faced hammer, tap in the straight pins to the specified protrusion height.

Protrusion height:

A 5 mm (0.1969 in.)

B 7.5 mm (0.2953 in.)

C 9 mm (0.3543 in.) or more

D 8 mm (0.3150 in.)

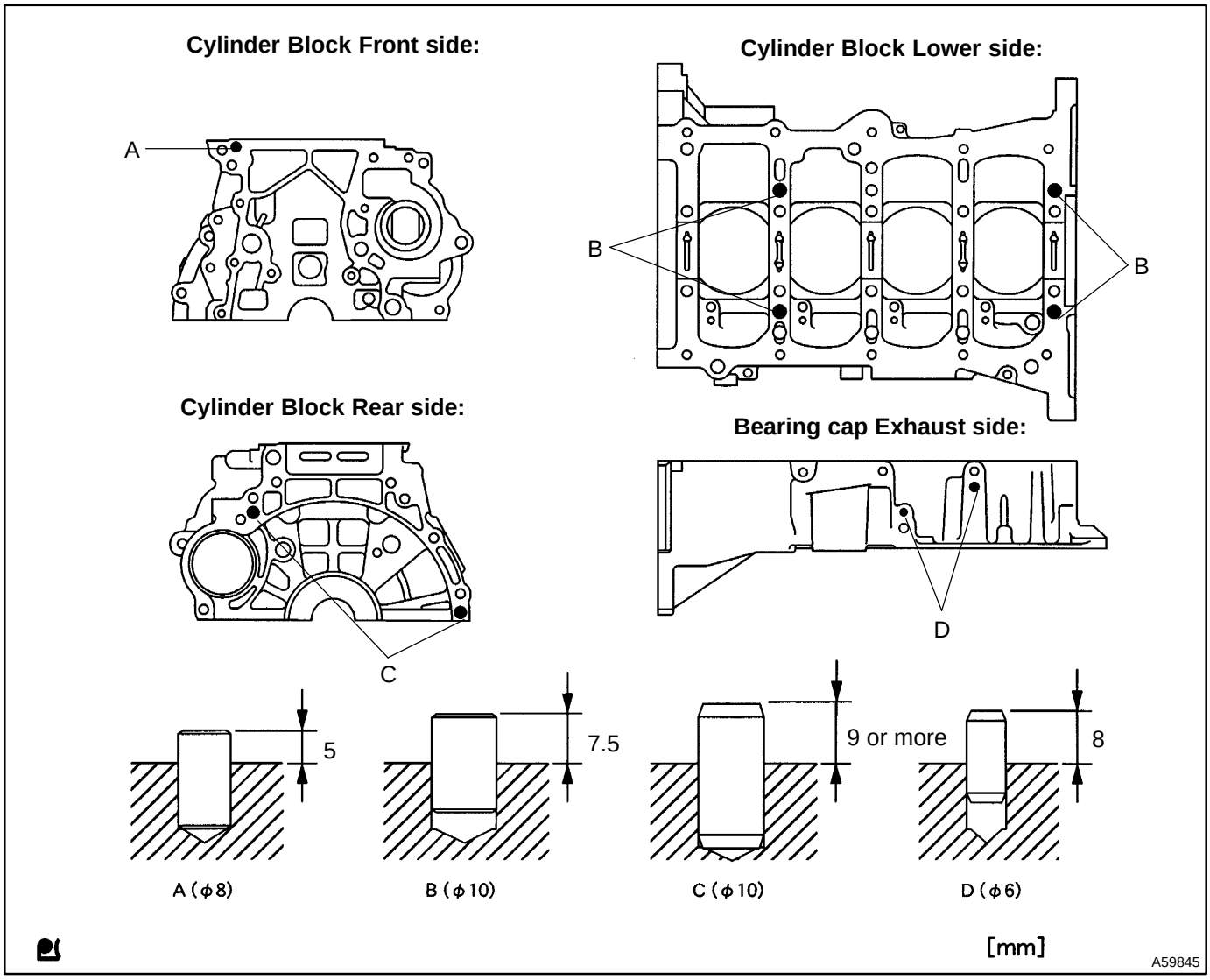

31. INSTALL TIGHT PLUG

(a) Apply adhesive around tight plugs.
Adhesive: Part No. 08833–00070, THREE BOND 1324 or equivalent

(b) Using SST, tap in the tight plugs A until its surface is flush with the cylinder block.

(c) Using SST, tap in the tight plugs B to the specified protrusion height.
Protrusion height:
B 1.5 – 2.5 mm(0.0591 – 0.0984 in.)
SST 09950–60010 (09951–00250), 09950–70010 (09951–07100, 09951–00450)

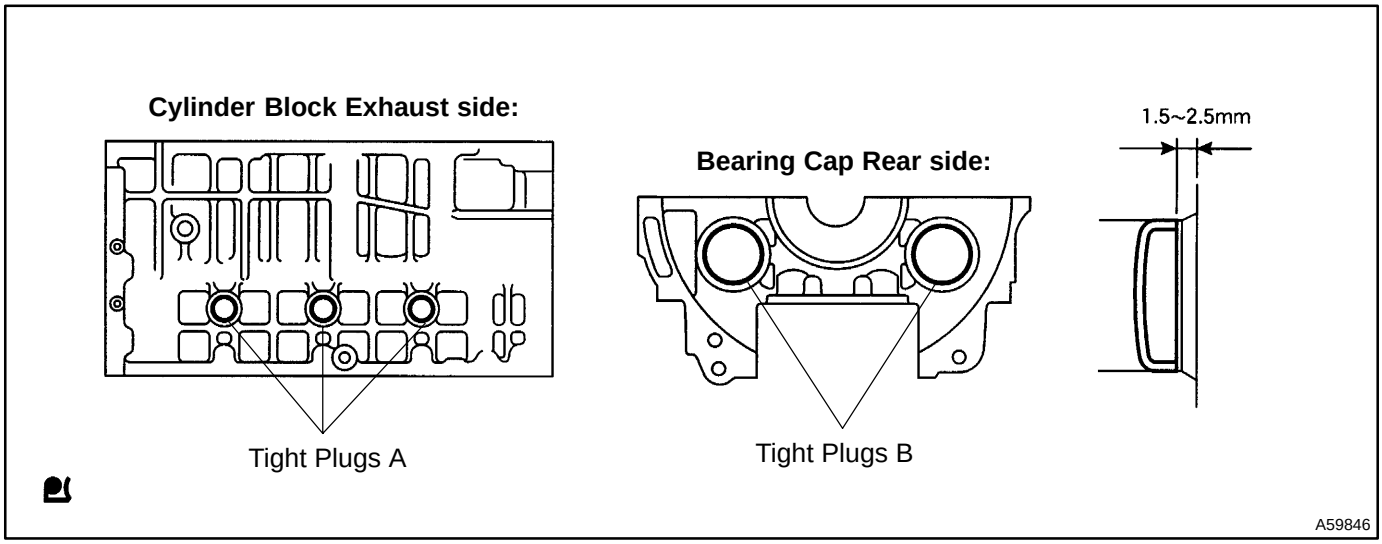

32. INSTALL SUB–ASSY OIL NOZZLE NO.1

(a) Using a bi–hexagon wrench (5), install the oil nozzle No.1.
Torque: 9.0 N·m (92 kgf·cm, 80 in·lbf)

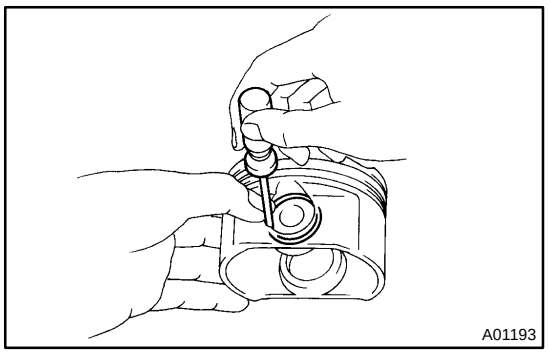

33. INSTALL PISTON PIN HOLE SNAP RING

(a) Using a small screwdriver, install a new snap ring at one end of the piston pin hole.

HINT:
Be sure that end gap of the snap ring is aligned with the pin hole cutout portion of the piston.

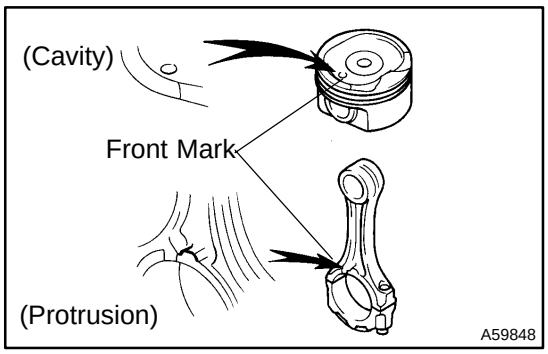

34. INSTALL W/PIN PISTON SUB–ASSY

(a) Coat the piston pin with engine oil.

(b) Align the front marks on the piston and connecting rod, and push in the piston with your thumb.

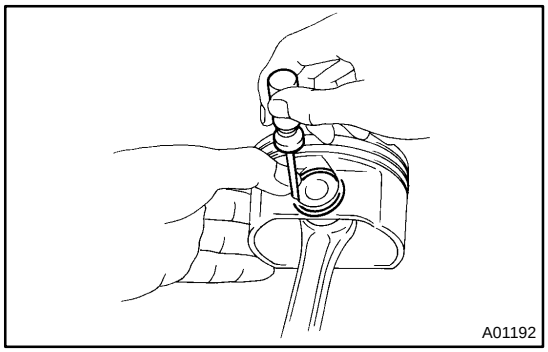

35. INSTALL PISTON PIN HOLE SNAP RING

(a) Using a small screwdriver, install a new snap ring on the other end of the piston pin hole.

HINT:

Be sure that end gap of the snap ring is not as aligned with the pin hole cutout portion of the piston.

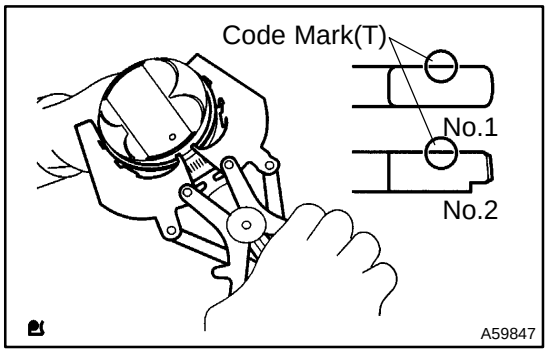

36. INSTALL PISTON RING SET

HINT:

In case of reusing the piston rings, install them to the matched pistons with the surfaces faced correctly.

(a) Install the oil ring expander and 2 side rails by hand.

(b) Using a piston ring expander, install the 2 compression rings with the code mark facing upward.

Code mark : T

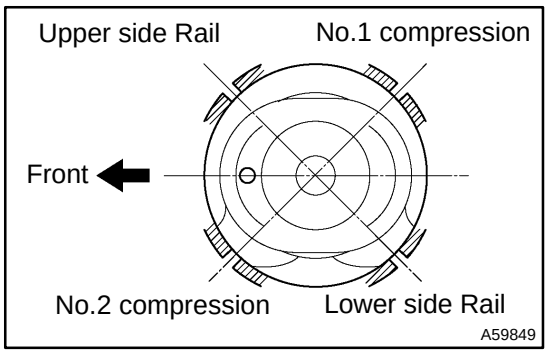

(c) Position the piston rings so that the ring ends are as shown.

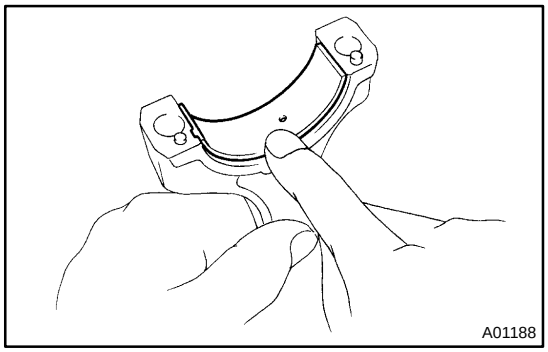

37. INSTALL CONNECTING ROD BEARING

(a) Align the bearing claw with the groove of the connecting rod or connecting cap.

NOTICE:

Clean the backside of the bearing and the bearing surface of the connecting rod and let not stick the oils and fats.

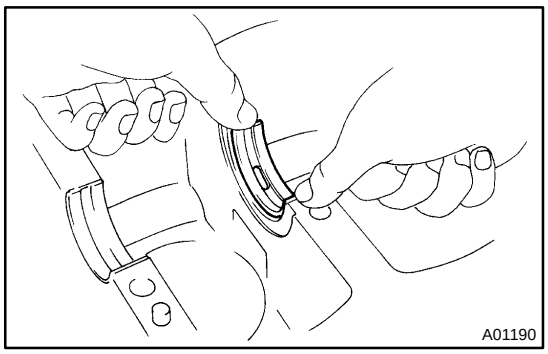

38. INSTALL CRANKSHAFT

(a) Install the upper bearing with an oil groove on cylinder block.

NOTICE:

Clean the backside of the bearing and the bearing surface of the bearing cap and let not stick the oils and fats.

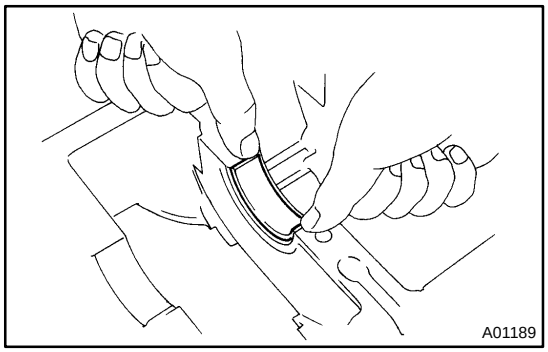

(b) Install the lower bearing on the bearing cap sub assembly.

NOTICE:

Clean the backside of the bearing and the bearing surface of the bearing cap and let not stick the oils and fats.

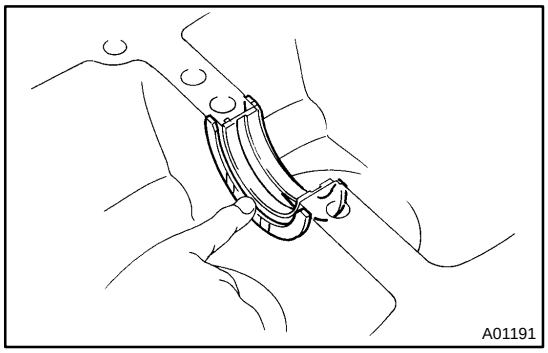

(c) Install the 2 thrust washers upper the No. 3 journal position of the cylinder block with the oil grooves facing outward.

(d) Apply engine oil to upper bearing and install the crankshaft on the cylinder block.

(e) Apply a light coat of engine oil on the bolt threads, the bolt seats, and the bearings of the bearing cap sub assembly.

(f) Apply seal packing in the shape of bead (Diameter 2.5 – 3.5 mm (0.08 – 0.12 in.) consequently as shown in the illustration.

Seal packing: Part No. 08826–00080 or equivalent

NOTICE:

- **Remove any oil from the contact surface.**
- **Install the bearing cap sub–assembly within 3 minutes after applying seal packing.**
- **Do not put into engine oil within 2 hours after the installation.**

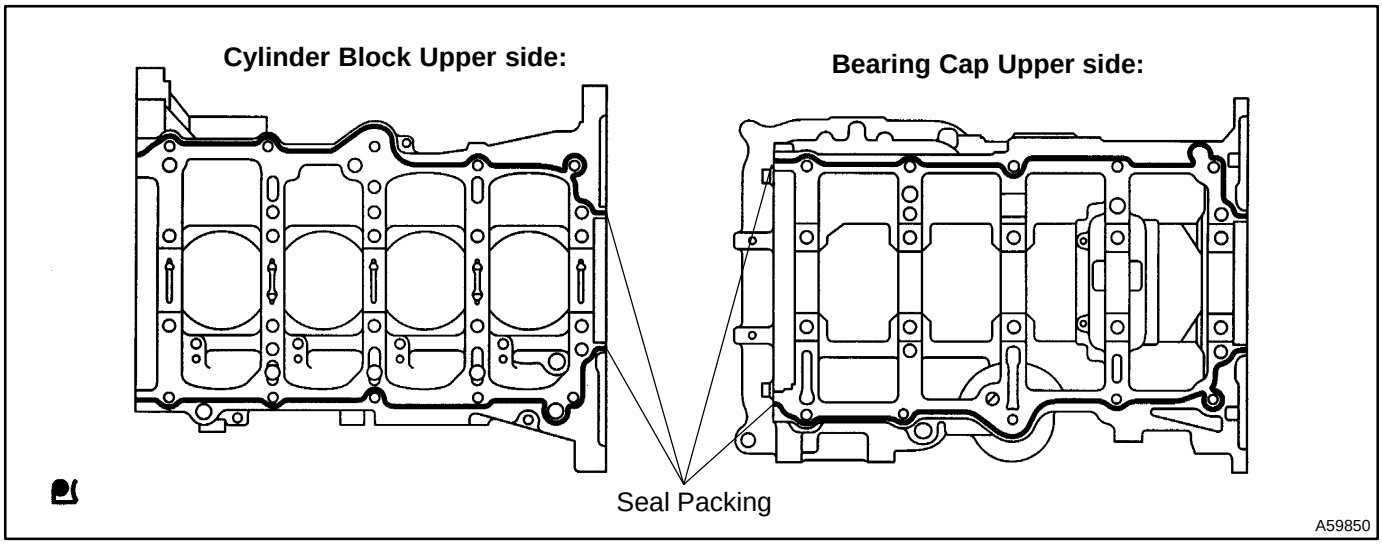

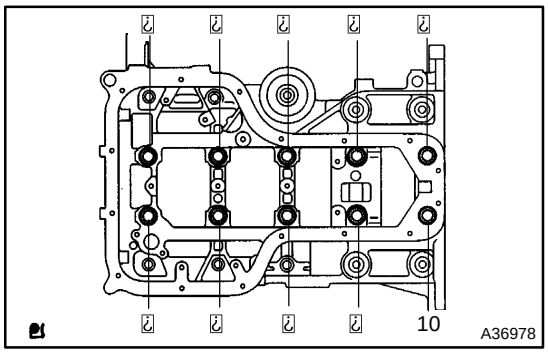

(g) Using socket wrench (12), tighten the bolts in several passes, in the sequence shown, by the specified torque.
Torque: 22 N·m (224 kgf·cm, 16 ft·lbf)

(h) Using socket wrench (12), retighten the bolts in several passes, in the sequence shown, by the specified torque.
Torque: 44 N·m (449 kgf·cm, 32 ft·lbf)

(i) Mark the front of the bearing cap sub–assembly bolts with paint.

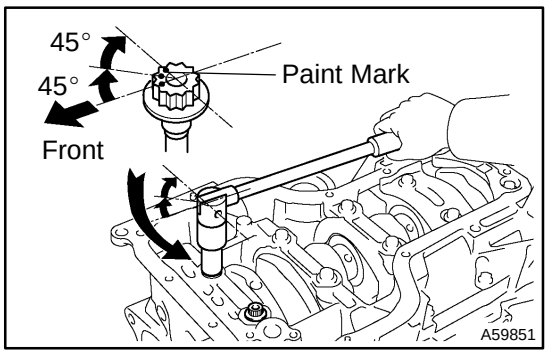

(j) Retighten the bearing cap sub–assembly bolts by 45 ° twice, in the numerical order shown.

(k) Check that the painted mark is now at a 90 ° angle to the front.

(l) Tighten 10 other bolts for the bearing cap.
Torque: 18 N·m (184 kgf·cm, 13 ft·lbf)

(m) apply adhesive to 2 or 3 threads, and install the 4 screw plugs.
Adhesive:
Part No. 08833–0070, THREE BOND 1324, or equivalent
Torque: 43 N·m (438 kgf·cm, 32 ft·lbf)

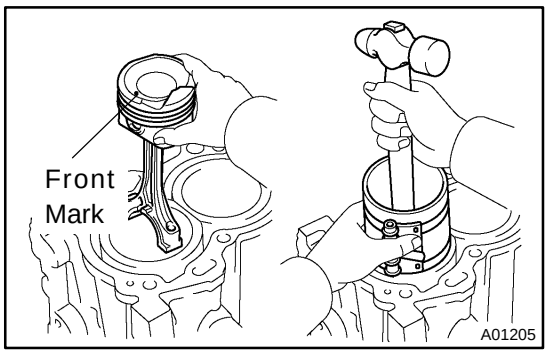

39. INSTALL CONNECTING ROD SUB–ASSY

(a) Apply engine oil to the cylinder walls, the pistons, and the surfaces of connecting rod bearings.

(b) Check the position of the piston ring ends.

(c) Using a piston ring compressor, push the correctly numbered piston and connecting rod assemblies into each cylinder with the front mark of the piston facing forward.

(d) Align the pin dowels of the connecting rod cap with the pins of the connecting rod, and install the connecting rod.

NOTICE:

- **Clean the backside and the surface of the connecting rod cap bearing and let not stick the oils and fats.**
- **Match the numbered connecting rod cap with the same numbered connecting rod.**

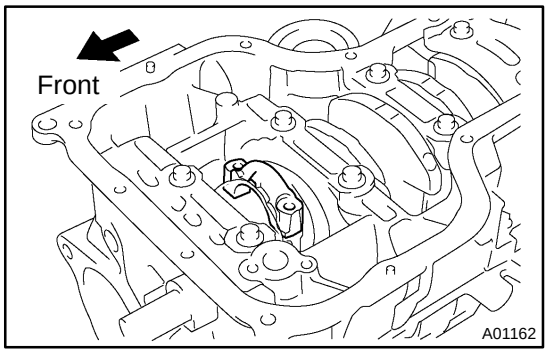

(e) Check that the protrusion of the connecting rod cap is facing in the correct direction.

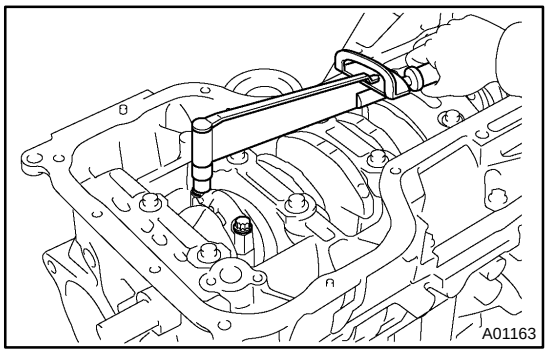

(f) Apply a light coat of engine oil on the threads and under the heads of the connecting rod cap bolts.

(g) Using SST, tighten the bolts in several passes by the specified torque.

SST 09205–16010

Torque: 30 N·m (306 kgf·cm, 22 ft·lbf)

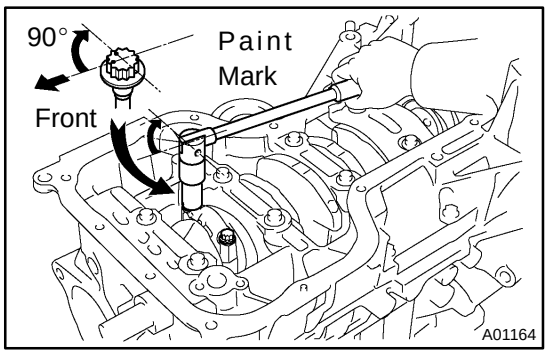

(h) Mark the front of the connecting cap bolts with paint.

(i) Retighten the cap bolts by 90 ° as shown in the illustration.

(j) Check that the crankshaft turns smoothly.

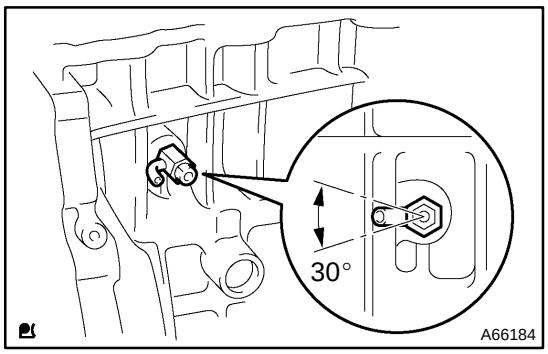

40. INSTALL CYLINDER BLOCK WATER DRAIN COCK SUB–ASSY

(a) Apply two or three threads of adhesive to the drain union, and install it within 3 minutes.

Torque: 25 N·m (255 kgf·cm 18 ft·lbf)

(b) After applying the specified torque, rotate the drain union clockwise until its drain port faces downward.

NOTICE:

- **Do not put into coolant in an hour after the installation.**
- **Do not rotate the drain union more than 360 ° in (b), and never loosen it after setting the union correctly.**

CHAIN SUB–ASSY (1ZZ–FE)

140OG–02

COMPONENTS

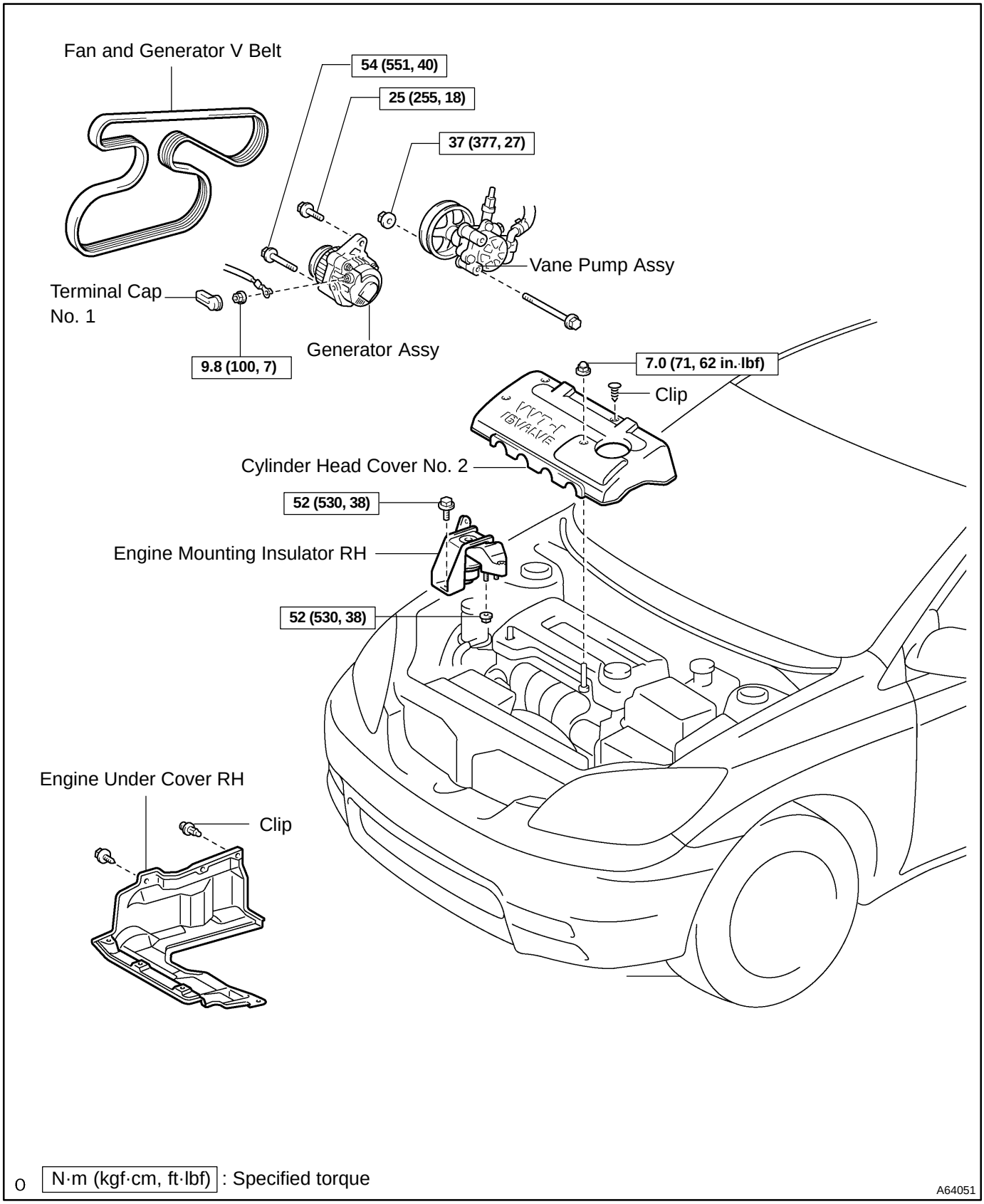

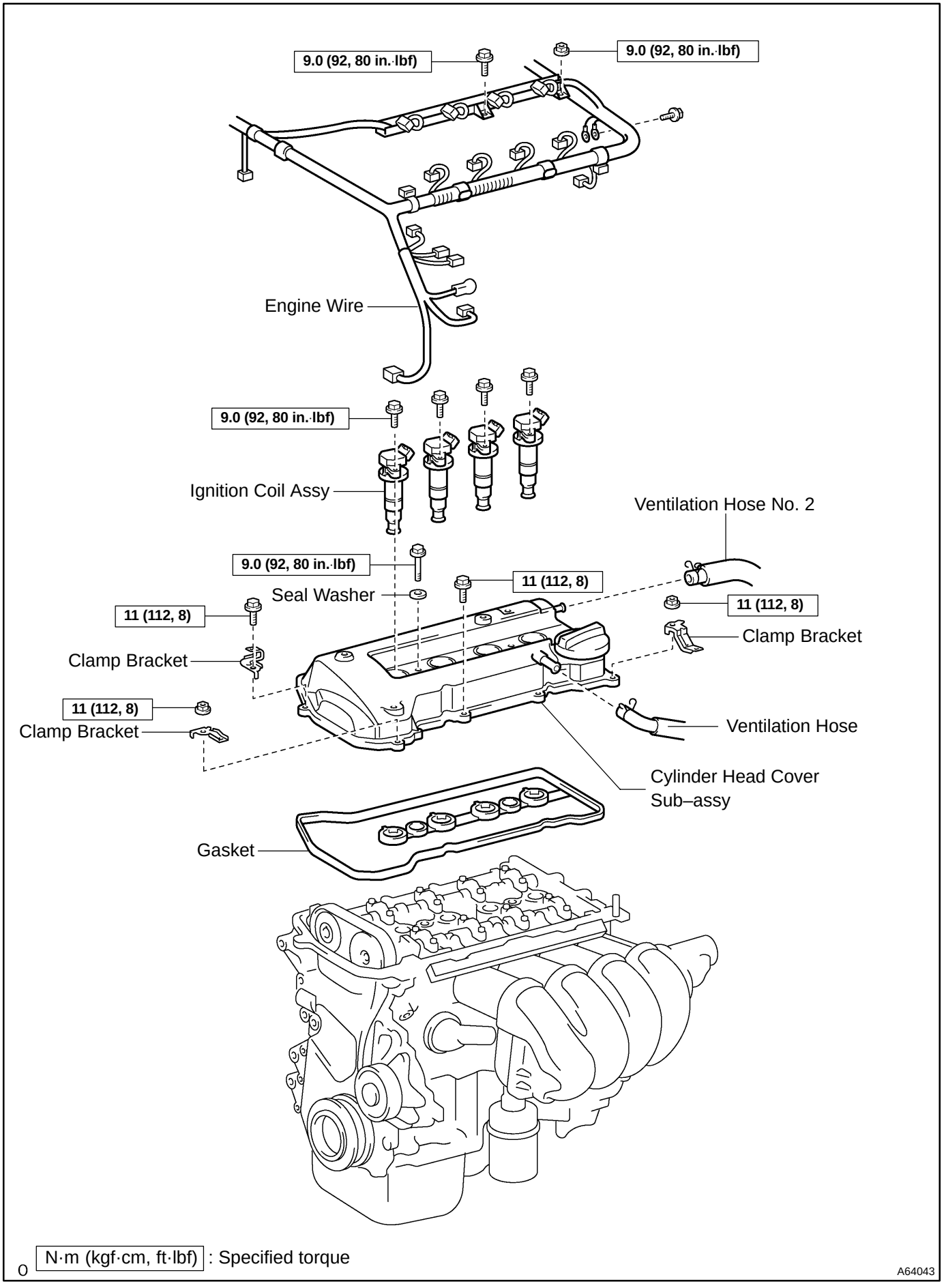
9.0 (92, 80 in.·lbf)
9.0 (92, 80 in.·lbf)
Engine Wire
9.0 (92, 80 in.·lbf)
Ignition Coil Assy
Ventilation Hose No. 2
9.0 (92, 80 in.·lbf)
11 (112, 8)
Seal Washer
11 (112, 8)
11 (112, 8)
Clamp Bracket
Clamp Bracket
11 (112, 8)
Clamp Bracket
Ventilation Hose
Cylinder Head Cover Sub–assy
Gasket
o N·m (kgf·cm, ft·lbf) : Specified torque
A64043

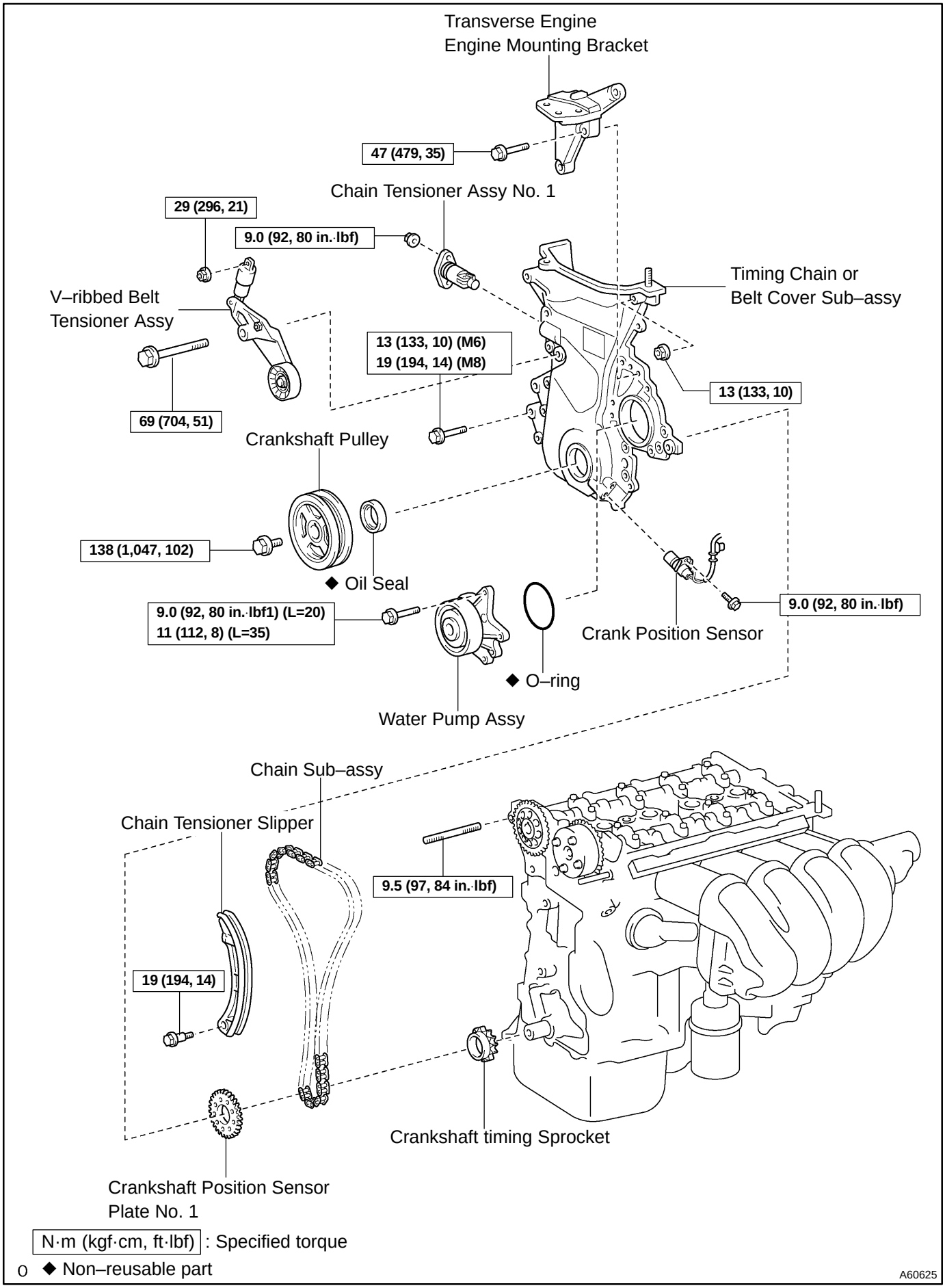
Transverse Engine
Engine Mounting Bracket
47 (479, 35)
Chain Tensioner Assy No. 1
29 (296, 21)
9.0 (92, 80 in.·lbf)
V–ribbed Belt
Tensioner Assy
Timing Chain or
Belt Cover Sub–assy
13 (133, 10) (M6)
19 (194, 14) (M8)
13 (133, 10)
69 (704, 51)
Crankshaft Pulley
138 (1,047, 102)
◆ Oil Seal
9.0 (92, 80 in.·lbf1) (L=20)
11 (112, 8) (L=35)
9.0 (92, 80 in.·lbf)
Crank Position Sensor
◆ O–ring
Water Pump Assy
Chain Sub–assy
Chain Tensioner Slipper
9.5 (97, 84 in.·lbf)
19 (194, 14)
Crankshaft timing Sprocket
Crankshaft Position Sensor
Plate No. 1
N·m (kgf·cm, ft·lbf) : Specified torque
◆ Non–reusable part
A60625

140OH–02

REPLACEMENT

1. REMOVE ENGINE UNDER COVER RH
2. DRAIN COOLANT (See page 16–6)
3. REMOVE FRONT WHEEL RH

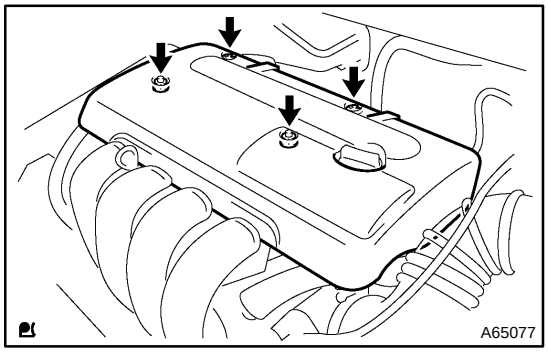

4. REMOVE CYLINDER HEAD COVER NO.2

(a) Remove the 2 nuts, 2 clips and cylinder head cover.

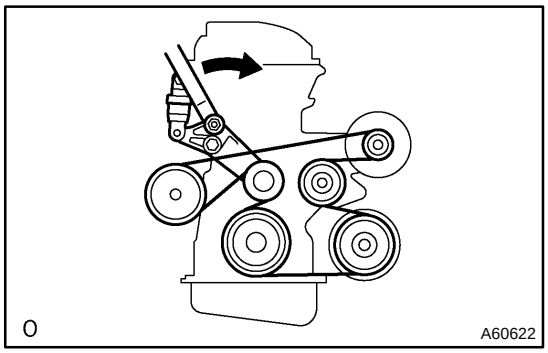

5. REMOVE FAN AND GENERATOR V BELT

(a) Turn the V–ribbed belt tensioner slowly clockwise and loosen it. Then, remove the fan and generator V belt and put back the V–ribbed belt tensioner little by little and fix it quietly.

6. SEPARATE VANE PUMP ASSY (See page 51–8)

NOTICE:

Do not disconnect the hose.

7. REMOVE GENERATOR ASSY (See page 19–15)

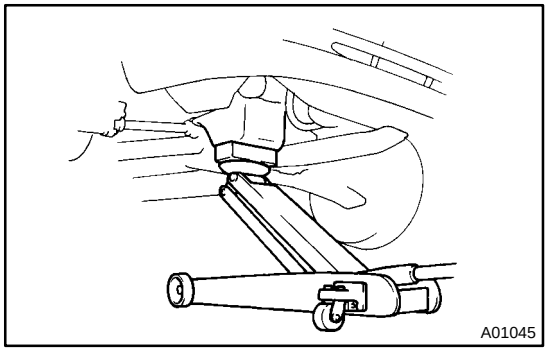

8. REMOVE ENGINE MOUNTING INSULATOR SUB–ASSY RH

(a) Remove the PS oil pump reservoir and put it aside.

(b) Place a wooden block between the jack and engine, and set the jack, then remove the 4 bolts, the 2 nuts and engine mounting insulator RH.

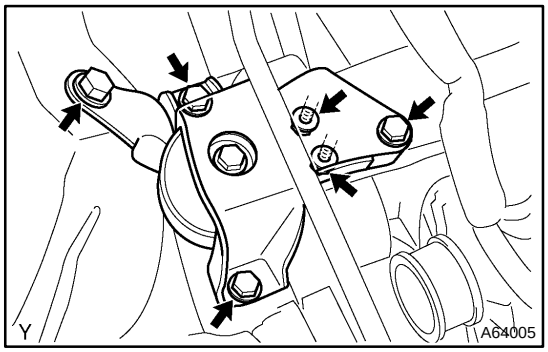

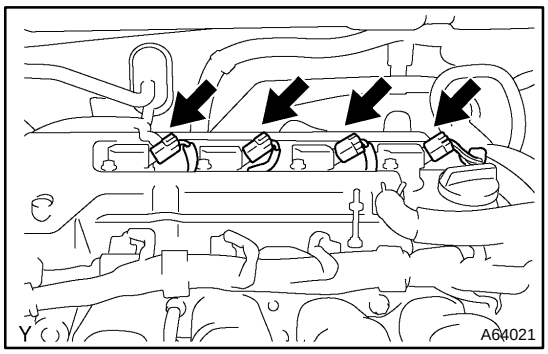

9. DISCONNECT ENGINE WIRE

(a) Remove the 5 clamps from the 5 clamp brackets.

(b) Disconnect the 4 ignition coil connectors.

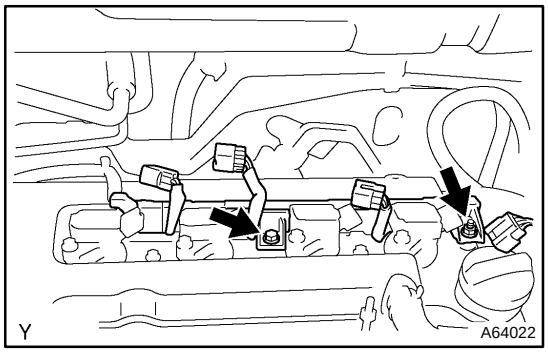

(c) Remove the bolt and nut installing the engine wire.

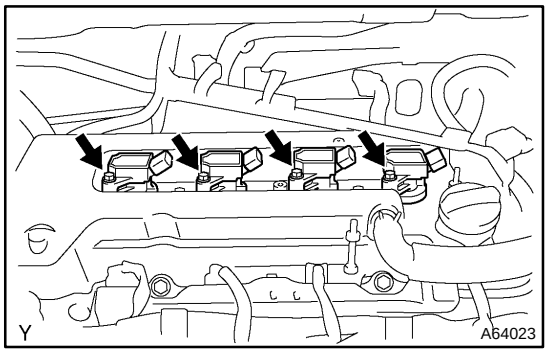

10. REMOVE IGNITION COIL ASSY

(a) Remove the 4 bolts and 4 ignition coils.

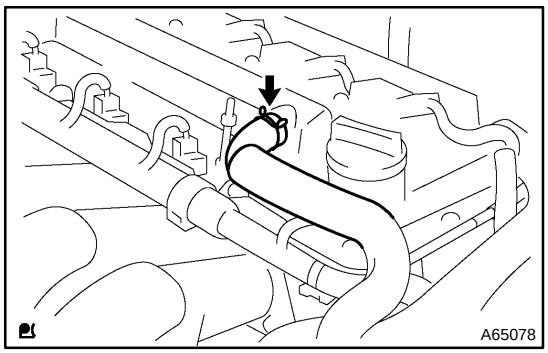

11. DISCONNECT VENTILATION HOSE

(a) Disconnect the ventilation hose from the cylinder head cover.

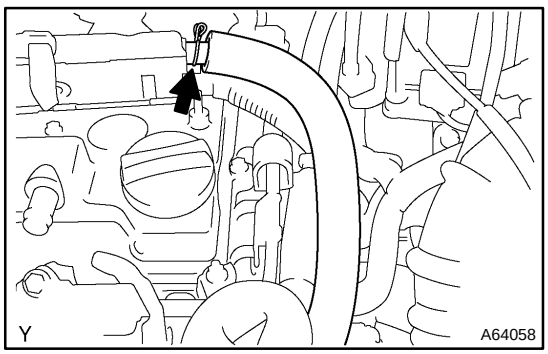

12. DISCONNECT VENTILATION HOSE NO.2

(a) Disconnect the ventilation hose from the cylinder head cover.

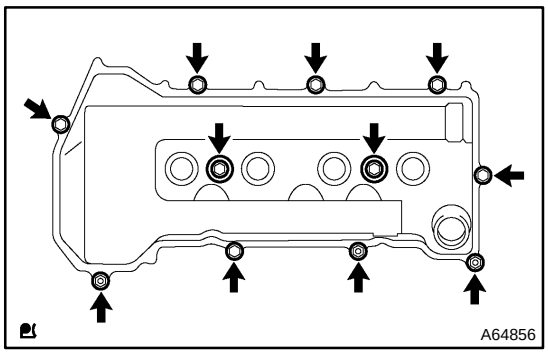

13. REMOVE CYLINDER HEAD COVER SUB–ASSY

(a) Remove the 9 bolts, 2 seal washers, 2 nuts, 3 clamp brackets and cylinder head cover.

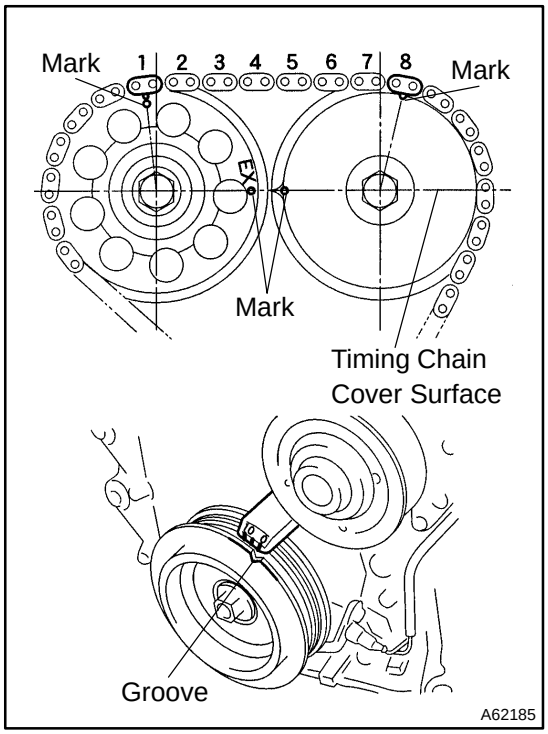

14. SET NO. 1 CYLINDER TO TDC/COMPRESSION

(a) Turn the crankshaft pulley, and align its groove with timing mark ”0” of the timing chain cover.

(b) Check that the point marks of the camshaft timing sprocket and VVT timing sprocket are in straight line on the timing chain cover surface as shown in the illustration.

HINT:

If not, turn the crankshaft 1 revolution (360°) and align the marks as above.

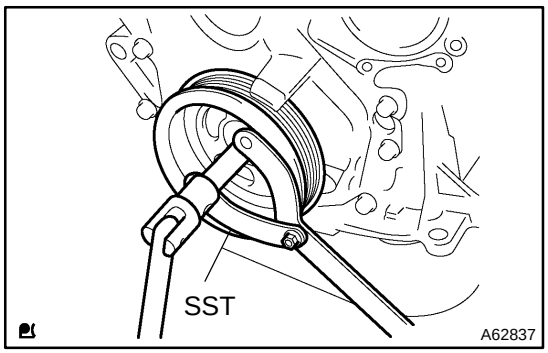

15. REMOVE CRANKSHAFT PULLEY

(a) Using SST, remove the pulley bolt.
SST 09960–10010 (09962–01000, 09963–01000)

(b) Remove the crankshaft pulley from the crankshaft.

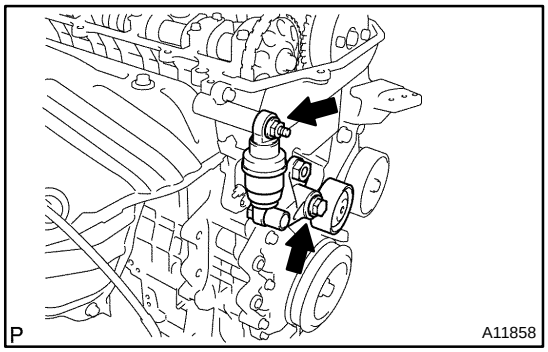

16. REMOVE V–RIBBED BELT TENSIONER ASSY

(a) Remove the bolt, nut and V–ribbed belt tensioner.

HINT:

Handle a jack up and down to remove the bolt.

17. REMOVE WATER PUMP ASSY (See page 16–7)

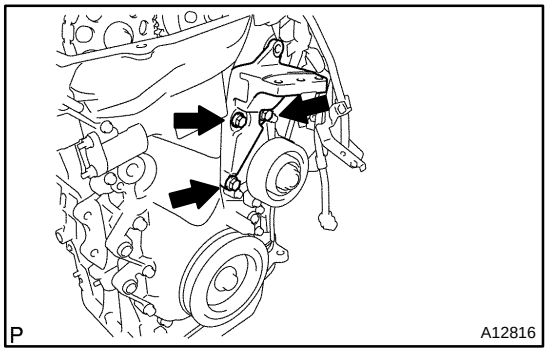

18. REMOVE TRANSVERSE ENGINE ENGINE MOUNTING BRACKET

(a) Remove the 3 bolts and transverse engine engine mounting bracket.

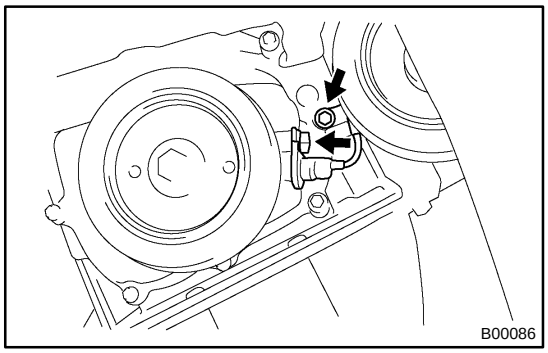

19. REMOVE CRANK POSITION SENSOR

(a) Remove the 2 bolts installing the crank position sensor.

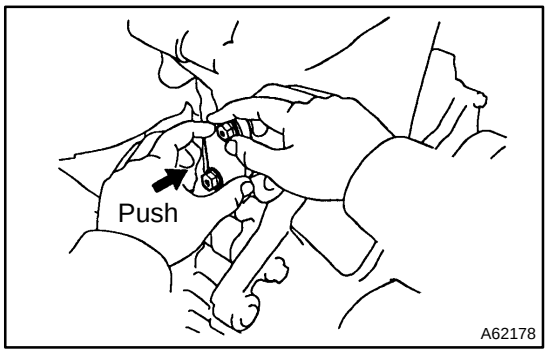

20. REMOVE CHAIN TENSIONER ASSY NO.1

(a) Remove the 2 nuts and chain tensioner.

NOTICE:

Be sure not to revolve the crankshaft without the chain tensioner.

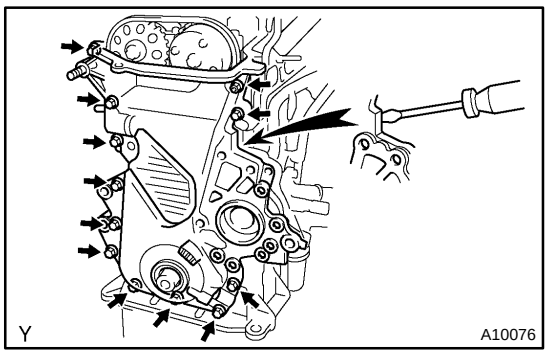

21. REMOVE TIMING CHAIN OR BELT COVER SUB–ASSY

(a) Remove the 11 bolts and nuts.

(b) Using a torx wrench socket (E8), remove the stud bolt.

(c) Remove the timing chain cover by prying the portions between the cylinder head and cylinder block with a screwdriver.

NOTICE:

Be careful no tot damage the contact surfaces of the timing chain cover, cylinder head and cylinder block.

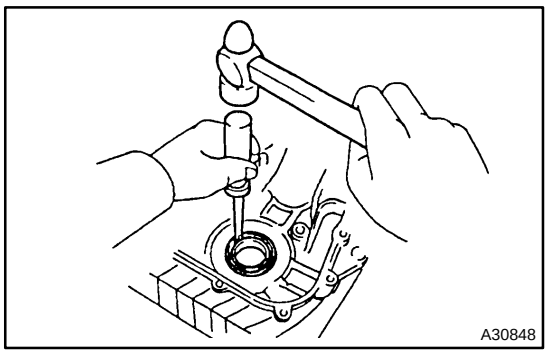

22. REMOVE TIMING GEAR COVER OIL SEAL

(a) Using a screwdriver, remove the oil seal.

23. REMOVE CRANKSHAFT POSITION SENSOR PLATE NO.1

24. REMOVE CHAIN TENSIONER SLIPPER

(a) Remove the bolt and chain tensioner slipper.

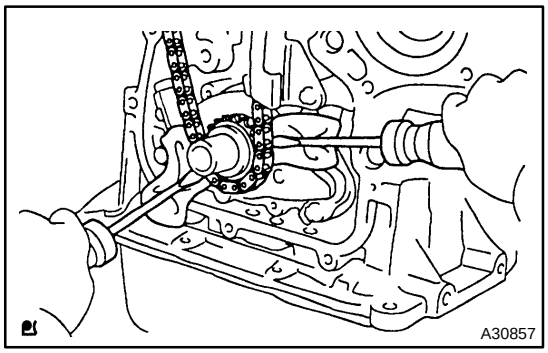

25. REMOVE CHAIN SUB–ASSY

(a) Remove the timing chain with the crankshaft timing gear plying screwdrivers as shown in the illustration.

NOTICE:

- **Put shop rag to protect the engine.**
- **In case of revolving the camshafts with the chain off the sprockets, turn the crankshaft 1/4 revolution for valves not to touch the pistons.**

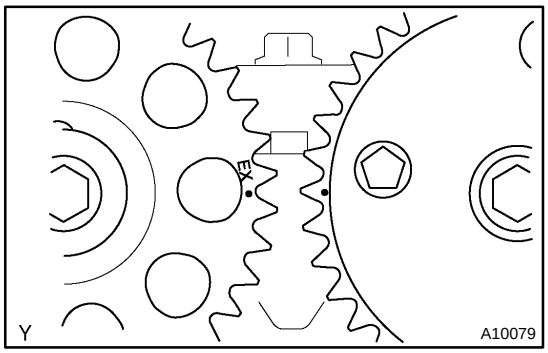

26. INSTALL CHAIN SUB–ASSY

(a) Set No. 1 cylinder to TDC/compression.

(1) Turn the hexagonal wrench head portion of the camshafts, and align the point marks of the camshaft timing sprockets.

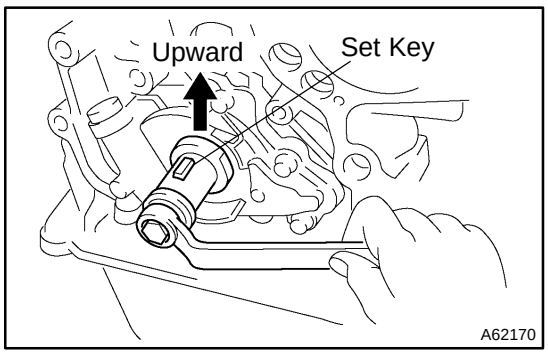

(2) Using a crankshaft pulley bolt, turn the crankshaft and set the set key on the crankshaft upward.

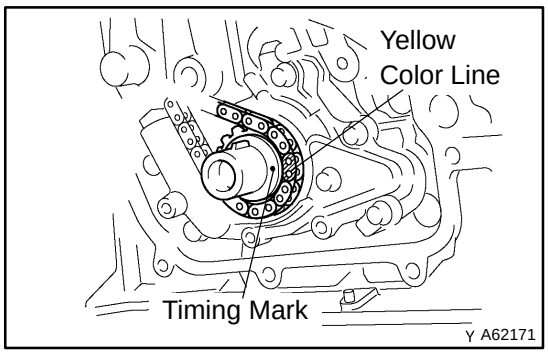

(b) Install the timing chain on the crankshaft timing sprocket with the yellow color link aligned with the timing mark on the crankshaft timing sprocket.

HINT:

Three yellow color links are on the chain.

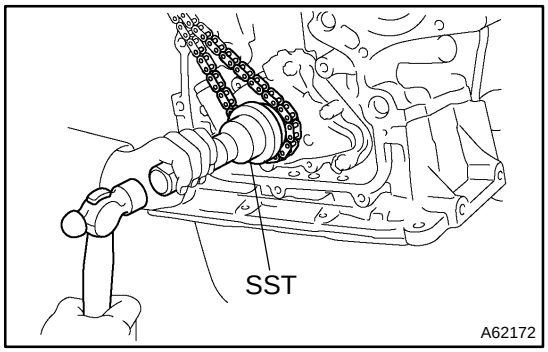

(c) Using SST, install the crankshaft timing sprocket.
SST 09223–22010

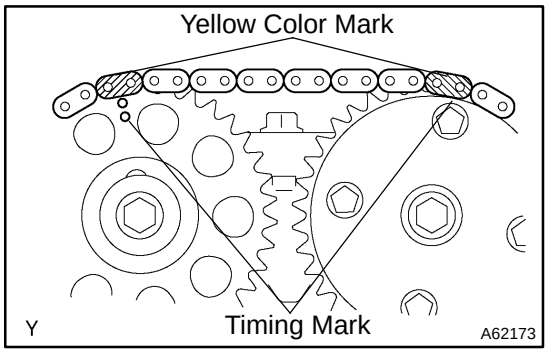

(d) Install the timing chain on the camshaft timing sprockets with the yellow color links aligned with the timing marks on the camshaft timing sprockets.

27. INSTALL CHAIN TENSIONER SLIPPER

(a) Install the chain tensioner slipper with the bolt.
Torque: 19 N·m (194 kgf·cm, 14 ft·lbf)

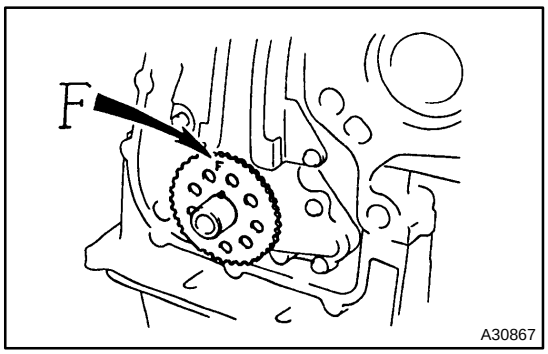

28. INSTALL CRANKSHAFT POSITION SENSOR PLATE NO.1

(a) Install the plate with the ”F” mark facing forward.

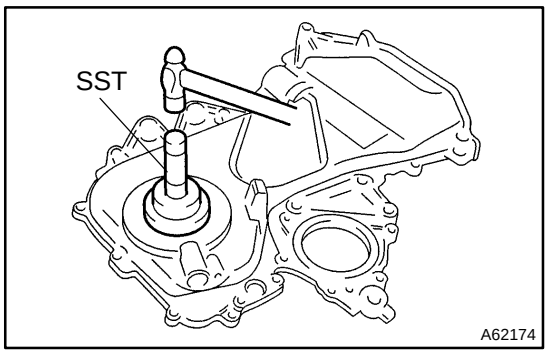

29. INSTALL TIMING GEAR COVER OIL SEAL

(a) Apply MP grease to a new oil seal lip.

(b) Using SST, tap in the oil seal until its surface is flush with the timing chain cover edge.

SST 09223–22010

NOTICE:

Keep the lip off foreign materials.

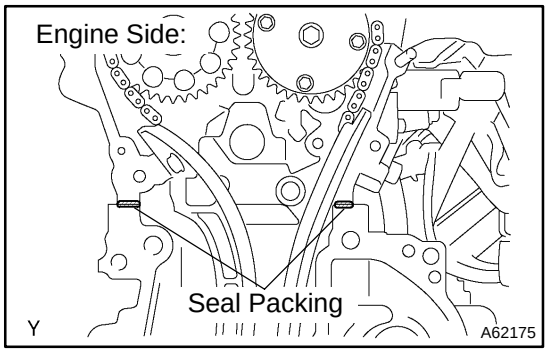

30. INSTALL TIMING CHAIN OR BELT COVER SUB–ASSY

(a) Remove any old packing material from the contact surface.

(b) Apply seal packing in the shape of bead (Diameter 3.5 mm – 4.5 mm (0.1379 – 0.177 in.)) consequently as shown in the illustration.

Seal packing:

Water pump part part No. 08826–00100 or equivalent

Other part part No. 08826–00080 or equivalent.

NOTICE:

- **Remove any oil from the contact surface.**
- **Install the oil pan within 3 minutes after applying seal packing.**
- **Do not put into engine oil within 2 hours after installing.**

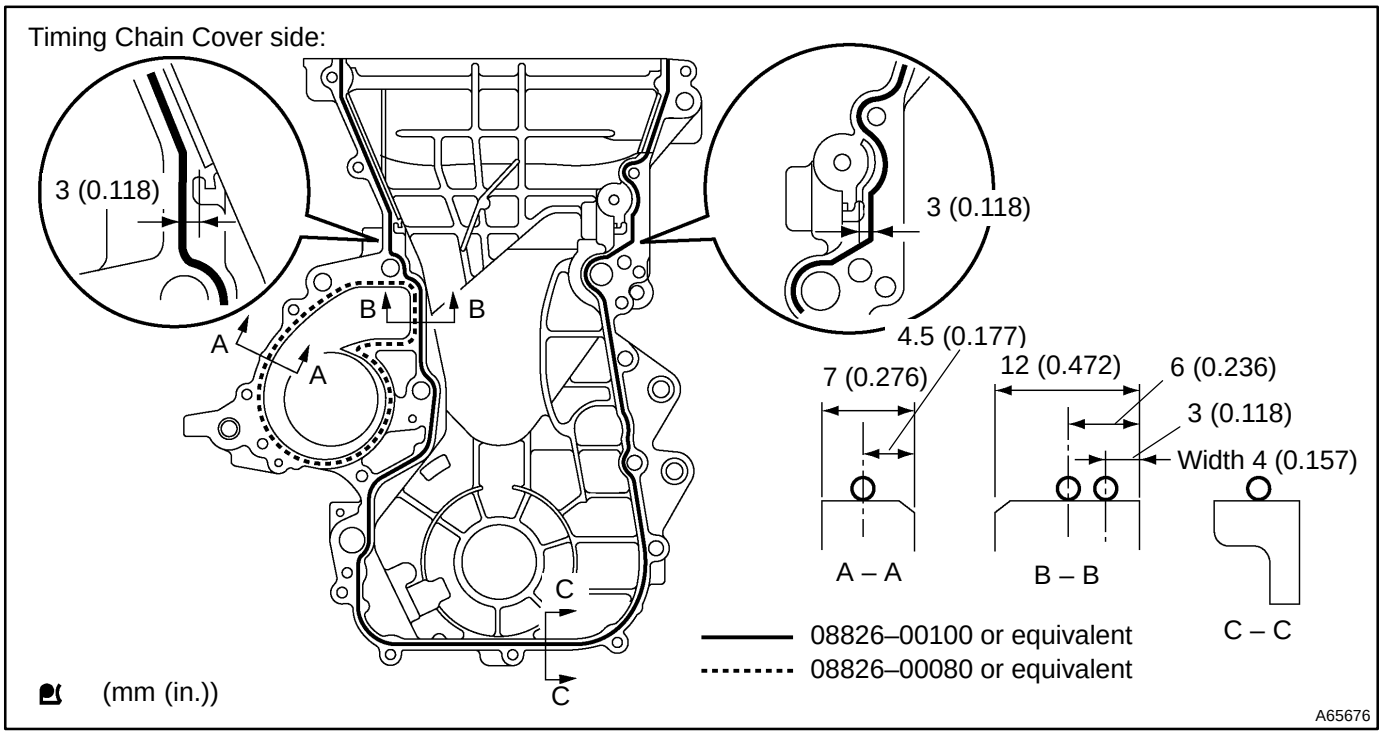

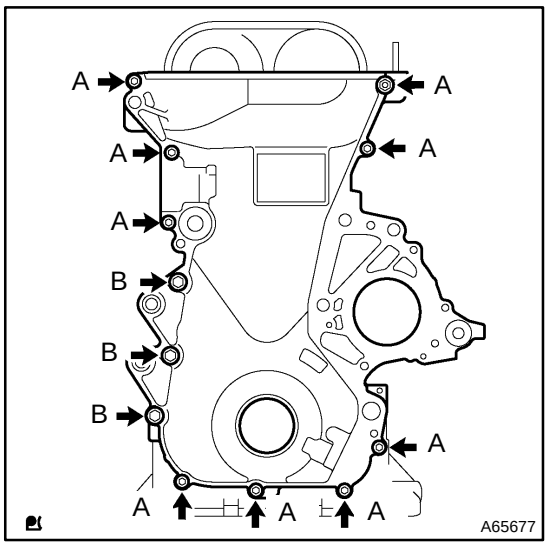

(c) Install the timing chain cover with the 11 bolts and nut.
Torque:
A: 13 N·m (133 kgf·cm, 10 ft·lbf)
B: 19 N·m (194 kgf·cm, 14 ft·lbf)

(d) Using a torx wrench socket (E8), install the stud bolt.
Torque: 9.5 N·m (97 kgf·cm, 84 in.·lbf)

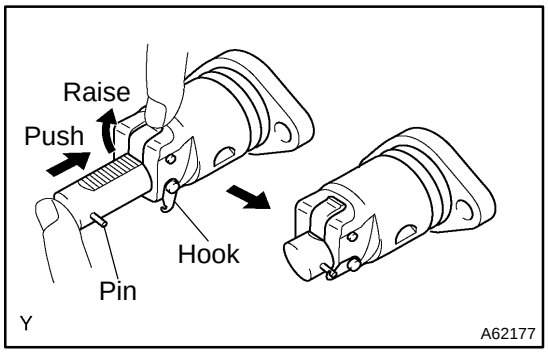

31. INSTALL CHAIN TENSIONER ASSY NO.1

(a) Check the O–ring is clean, and set the hook as shown in the illustration.

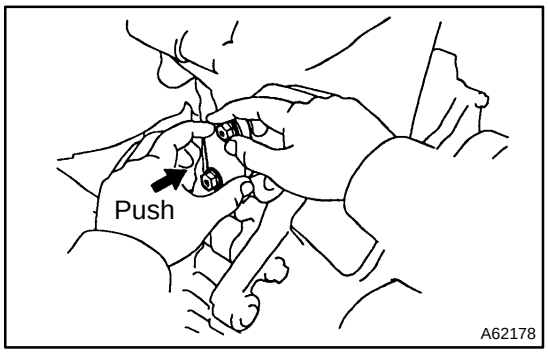

(b) Apply engine oil to the chain tensioner and install it withe 2 nuts.
Torque: 9.0 N·m (92 kgf·cm, 80 in.·lbf)

NOTICE:
When installing the tensioner, set the hook again if the hook release the plunger.

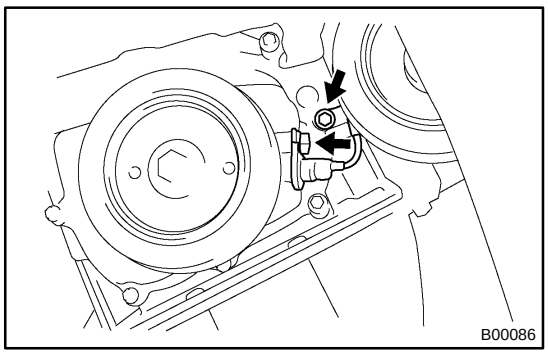

32. INSTALL CRANK POSITION SENSOR

(a) Install the crank position sensor with the 2 bolts.
Torque: 9.0 N·m (92 kgf·cm, 80 in.·lbf)

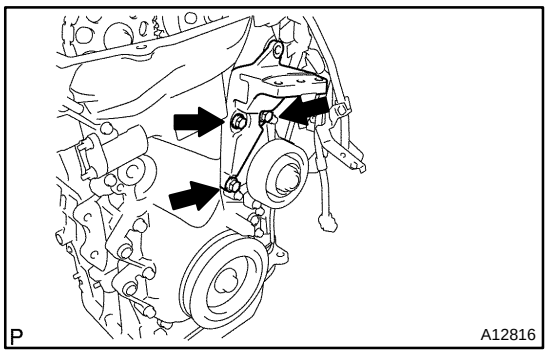

33. INSTALL TRANSVERSE ENGINE ENGINE MOUNTING BRACKET

(a) Install the transverse engine engine mounting bracket with the 3 bolts.
Torque: 47 N·m (479 kgf·cm, 35 ft·lbf)

34. INSTALL WATER PUMP ASSY (See page 16–7)

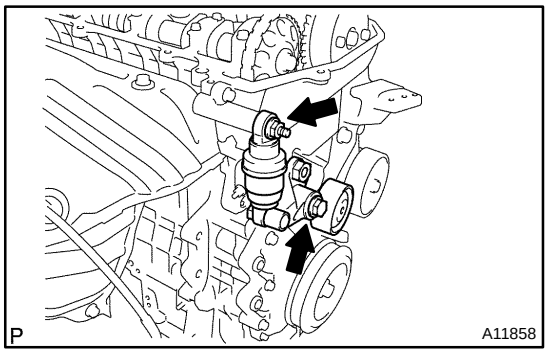

35. INSTALL V–RIBBED BELT TENSIONER ASSY

(a) Install the V–ribbed belt tensioner with the nut and bolt.
Torque:
Nut 29 N·m (296 kgf·cm, 21 ft·lbf)
Bolt 69 N·m (704 kgf·cm, 51 ft·lbf)

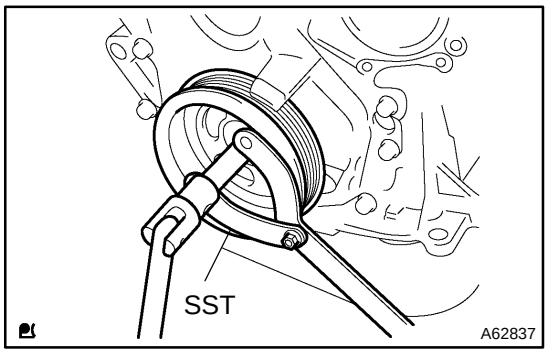

36. INSTALL CRANKSHAFT PULLEY

(a) Align the pulley set key with the key groove of the pulley, and slide on the pulley.

(b) Using SST, install the crankshaft pulley bolt.
SST 09960–10010 (09962–01000, 09963–01000)
Torque: 138 N·m (1,407 kgf·cm, 102 ft·lbf)

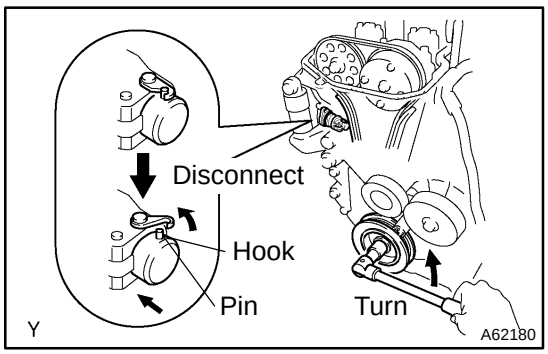

(c) Turn the crankshaft counter clockwise, and disconnect the plunger knock pin form the hook.

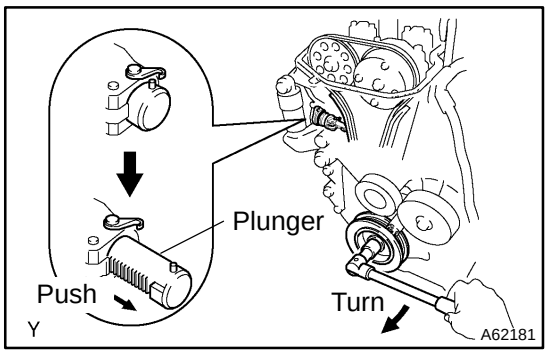

(d) Turn the crankshaft clockwise, and check that the slipper is pushed by the plunger.

HINT:

If the plunger does not spring out, press the slipper into the chain tensioner with a screwdriver so that the hook is released from the knock pin and the plunger springs out.

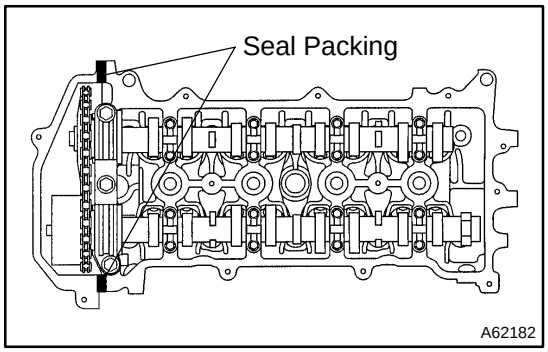

37. INSTALL CYLINDER HEAD COVER SUB–ASSY

(a) Remove any old pacing (FIPG) material.

(b) Apply seal packing to 2 locations as shown in the illustration.

Seal packing: Part No. 08826–00080 or equivalent

NOTICE:

- **Remove any oil from the contact surface.**
- **Install the cylinder head cover within 3 minutes after applying seal packing.**
- **Do not put into engine oil 2 hours after installing.**

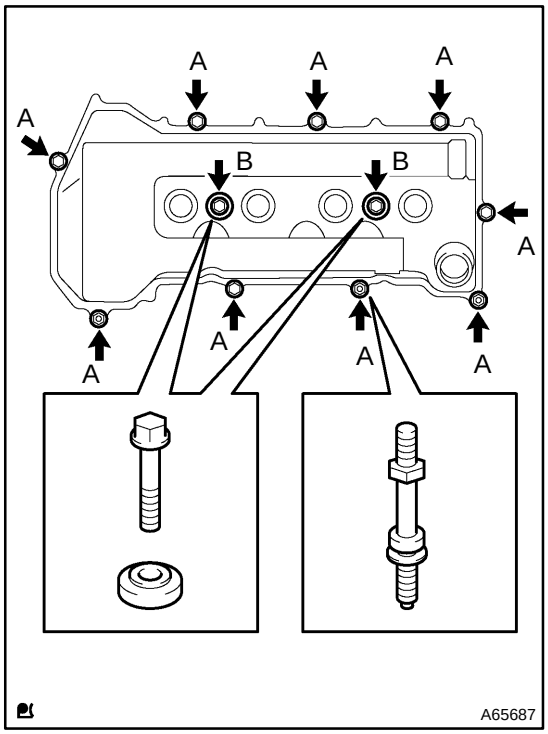

(c) Install the cylinder head cover and 3 cable brackets with the 9 bolts, 2 seal washers and 2 nuts. Uniformly tighten the bolts and nuts, in the several passes.

Torque:

A 11 N·m (112 kgf·cm, 8 ft·lbf)

B 9.0 N·m (92 kgf·cm, 80 in.·lbf)

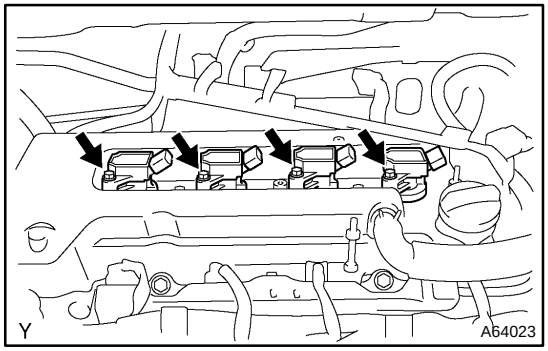

38. INSTALL IGNITION COIL ASSY

(a) Install the 4 ignition coils with the 4 bolts.

Torque: 9.0 N·m (92 kgf·cm, 80 in.·lbf)

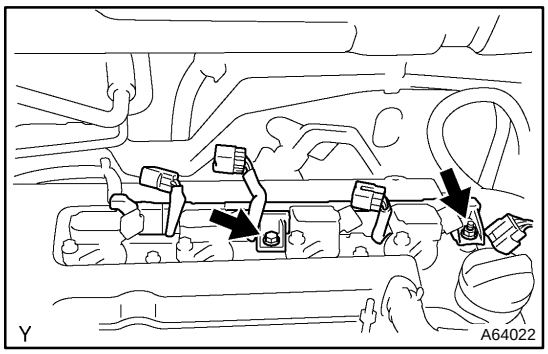

39. INSTALL ENGINE WIRE

(a) Install the engine wire with the bolt and nut.
Torque: 9.0 N·m (92 kgf·cm, 80 in.·lbf)

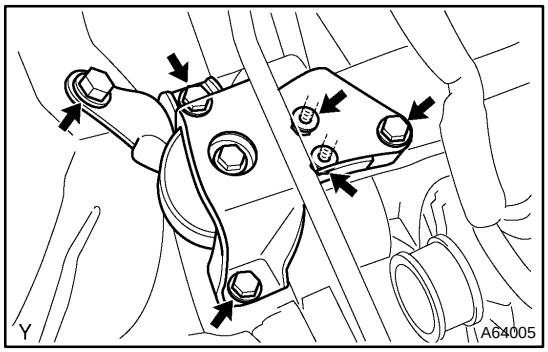

40. INSTALL ENGINE MOUNTING INSULATOR SUB–ASSY RH

(a) Install the engine mounting insulator with the 4 bolts and 2 nuts.
Torque: 52 N·m (530 kgf·cm, 38 ft·lbf)

41. INSTALL GENERATOR ASSY (See page 19–15)
42. INSTALL VANE PUMP ASSY (See page 51–8)

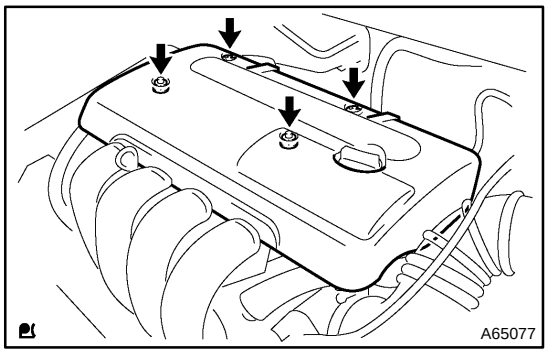

43. INSTALL CYLINDER HEAD COVER NO.2

(a) Install the cylinder head cover with the 2 nuts and 2 clips.
Torque: 7.0 N·m (71 kgf·cm, 62 in.·lbf)

44. INSTALL FRONT WHEEL RH
Torque: 103 N·m (1,050 kgf·cm, 76 ft·lbf)
45. ADD COOLANT (See page 16–6)
46. CHECK ENGINE COOLANT LEAK (See page 16–6)
47. CHECK ENGINE OIL LEAK

CHAIN SUB–ASSY (2ZZ–GE)

140RA–01

COMPONENTS

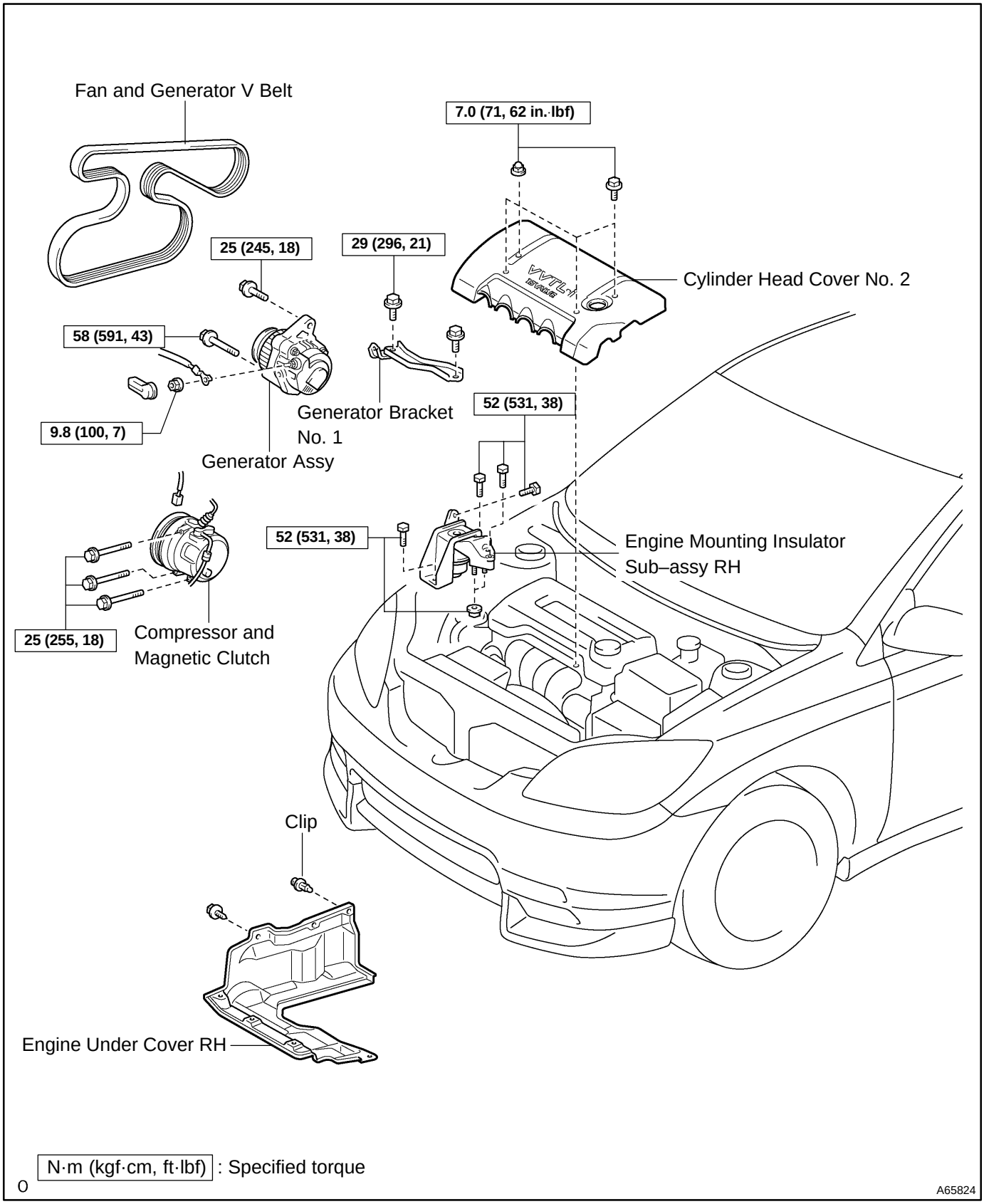

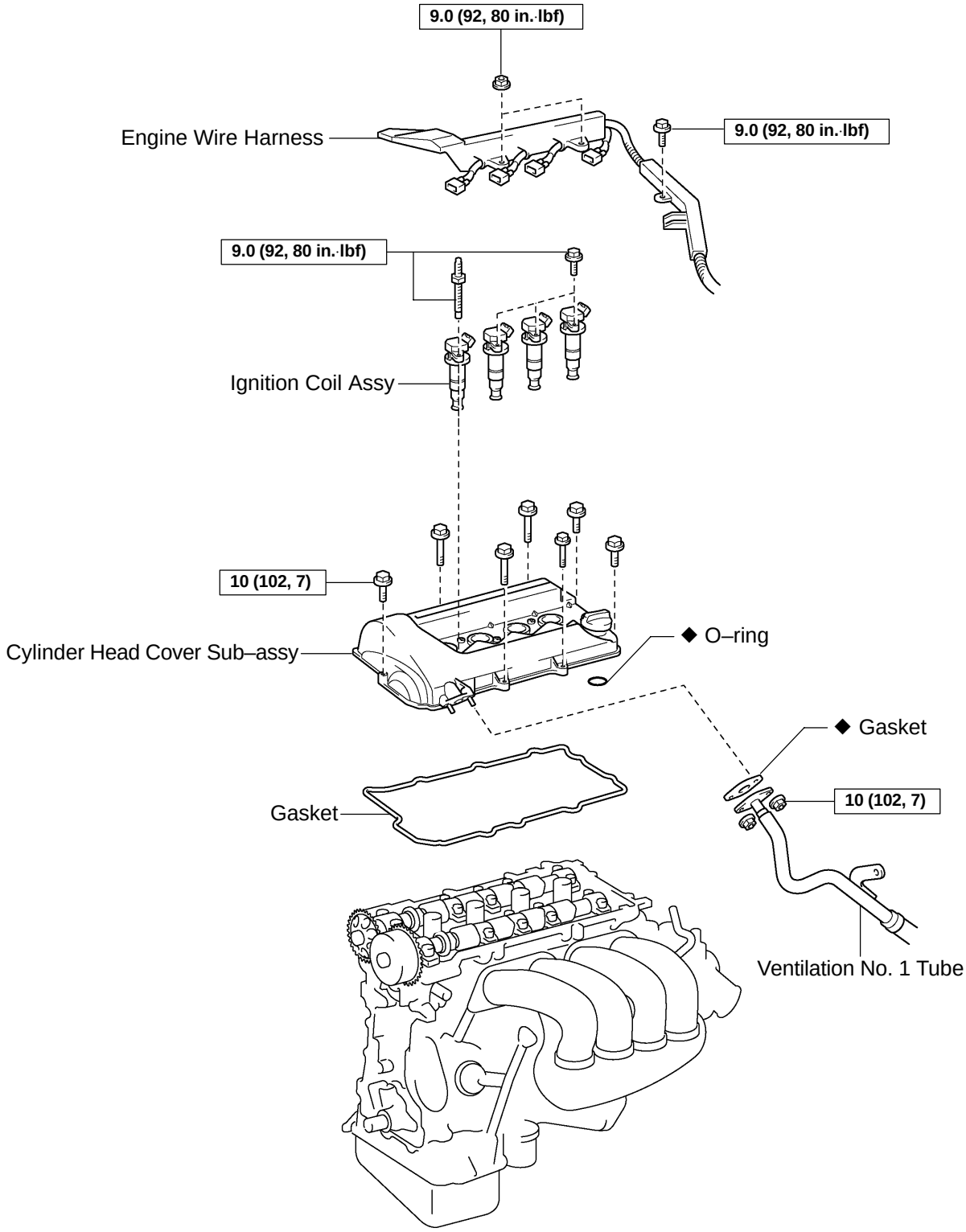

N·m (kgf·cm, ft·lbf) : Specified torque

◆ Non–reusable part

0

A65825

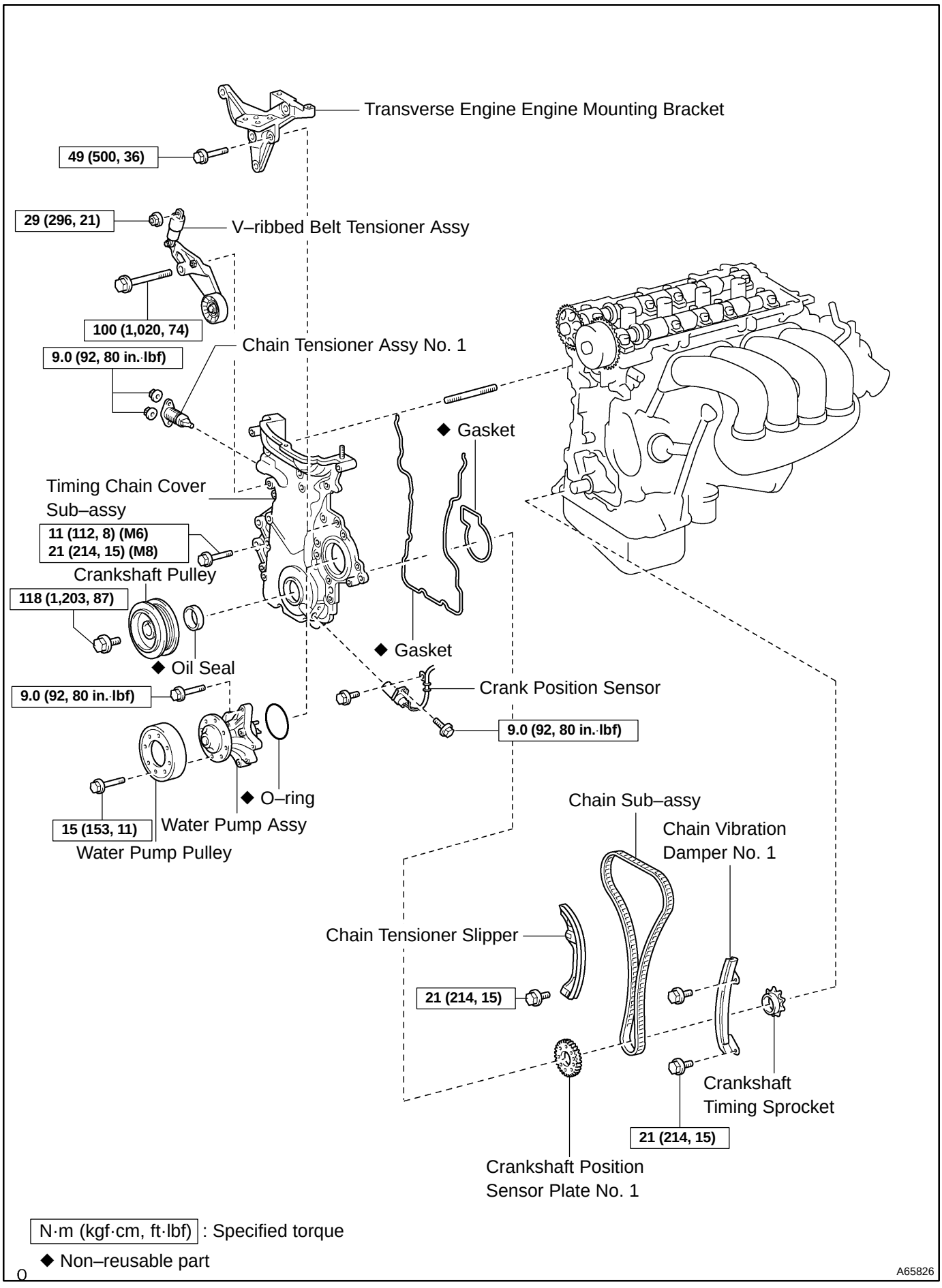
Transverse Engine Engine Mounting Bracket
49 (500, 36)
29 (296, 21)
V–ribbed Belt Tensioner Assy
100 (1,020, 74)
9.0 (92, 80 in.·lbf)
Chain Tensioner Assy No. 1
◆ Gasket
Timing Chain Cover Sub–assy
11 (112, 8) (M6)
21 (214, 15) (M8)
Crankshaft Pulley
118 (1,203, 87)
◆ Oil Seal
◆ Gasket
9.0 (92, 80 in.·lbf)
Crank Position Sensor
9.0 (92, 80 in.·lbf)
◆ O–ring
15 (153, 11)
Water Pump Assy
Water Pump Pulley
Chain Sub–assy
Chain Vibration Damper No. 1
Chain Tensioner Slipper
21 (214, 15)
Crankshaft Timing Sprocket
21 (214, 15)
Crankshaft Position Sensor Plate No. 1
N·m (kgf·cm, ft·lbf) : Specified torque
◆ Non–reusable part
A65826

140RB–01

REPLACEMENT

1. REMOVE ENGINE UNDER COVER RH

2. DRAIN COOLANT (See page 16–6)

3. REMOVE CYLINDER HEAD COVER NO.2

(a) Remove the 3 bolts, the nut and the cylinder head cover No. 2.

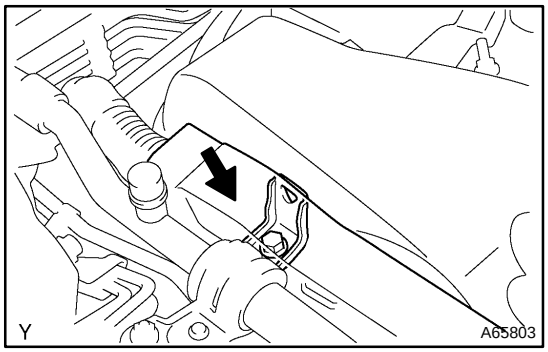

4. REMOVE WIRE HARNESS CLAMP

(a) Disconnect engine wire harness.

(b) Remove the bolt and wiring harness clamp bracket.

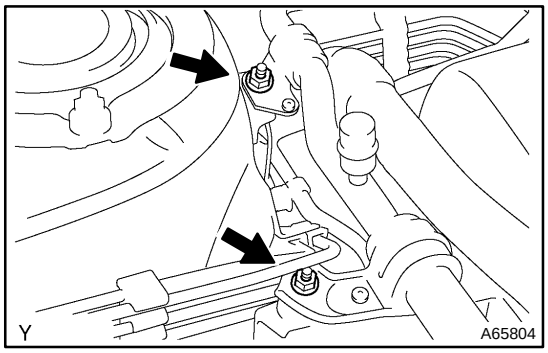

5. DISCONNECT SUCTION HOSE SUB–ASSY

(a) Remove the 2 nuts installing the suction hose sub–assy.

(b) Disconnect the suction hose sub–assy.

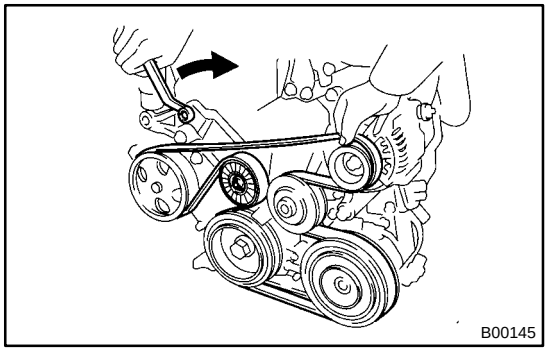

6. REMOVE FAN AND GENERATOR V BELT

(a) Turn the drive belt tensioner slowly clockwise and loosen it. Then, remove the drive belt and put back the drive belt tensioner little by little and fix it quietly.

7. REMOVE GENERATOR BRACKET NO.1 (See page 19–15)

8. REMOVE GENERATOR ASSY (See page 19–15)

9. DISCONNECT ENGINE WIRE

(a) Disconnect the ignition coil connectors, oil control valve and crankshaft position sensor connector.

(b) Remove the bolt and nut for the earth and put the engine wiring side.

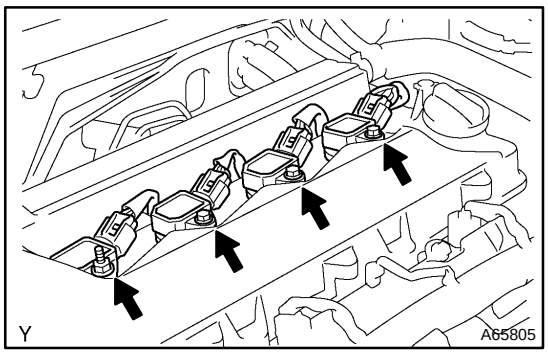

10. REMOVE IGNITION COIL ASSY

(a) Remove the 4 bolts and the 4 ignition coils.

11. REMOVE CYLINDER HEAD COVER SUB–ASSY

(a) Disconnect the fuel hose clamp and 2 PCV hoses from the cylinder head cover.

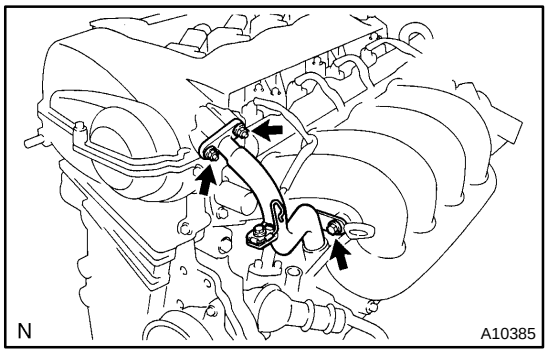

(b) Remove the 2 nuts, bolt and disconnect the No. 3 ventilation hose from the No. 1 ventilation pipe.

(c) Disconnect the ventilation No. 1 tube and gasket.

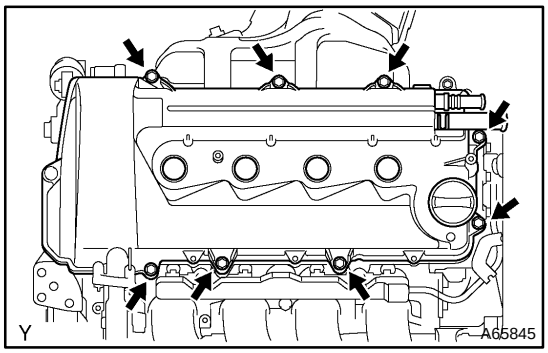

(d) Remove the 8 bolts, wire harness protector, cylinder head cover and gasket.

(e) Remove the O–ring from the cylinder head cover.

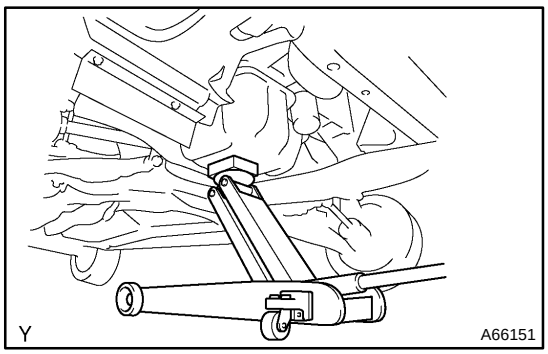

12. REMOVE ENGINE MOUNTING INSULATOR SUB–ASSY RH

(a) Set the jack to the engine.

HINT:

Place a wooden block between the jack and engine.

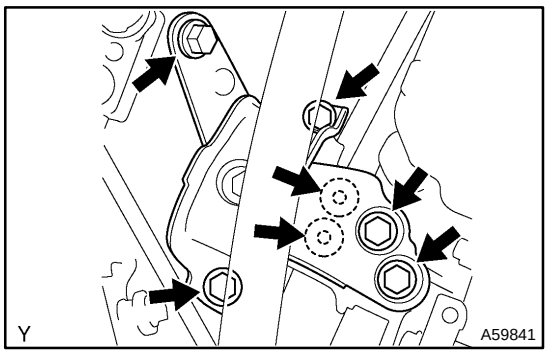

(b) Remove the 5 bolts, 2 nuts and engine mounting insulator sub–assy RH.

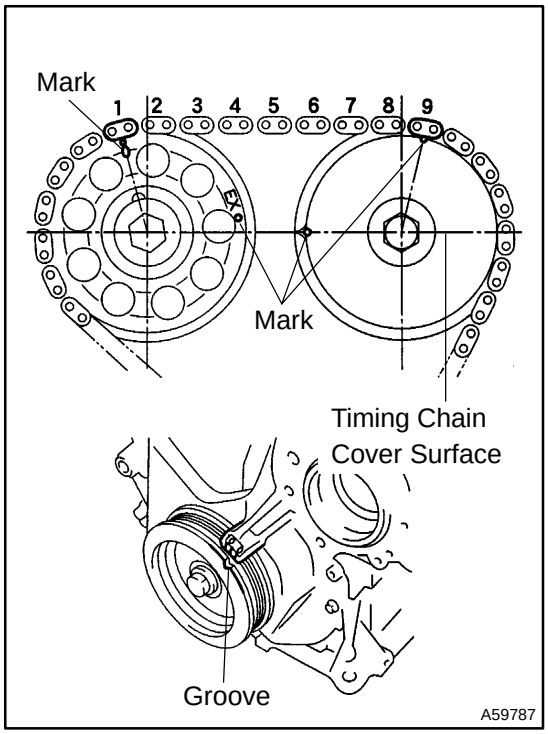

13. SET NO. 1 CYLINDER TO TDC/COMPRESSION

(a) Turn the crankshaft pulley, and align its groove with timing mark ”0” of the timing chain cover.

(b) Check that the point marks of the camshaft timing sprocket and VVT timing sprocket are in straight line on the timing chain cover surface as shown in the illustration.

HINT:

If not, turn the crankshaft 1 revolution (360°) and align the marks as above.

14. REMOVE V–RIBBED BELT TENSIONER ASSY

HINT:

Handle a jack up and down to remove the bolt.

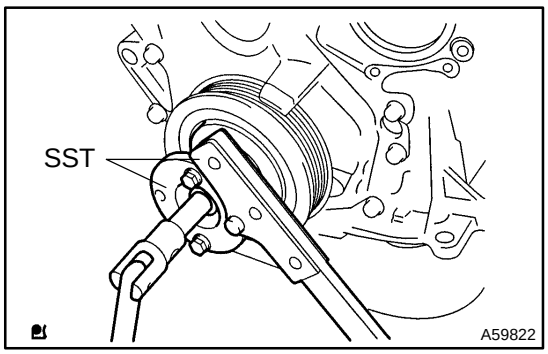

15. REMOVE CRANKSHAFT PULLEY

(a) Using SST, remove the pulley bolt.

SST 09213–70011 (09213–70020), 09330–00021

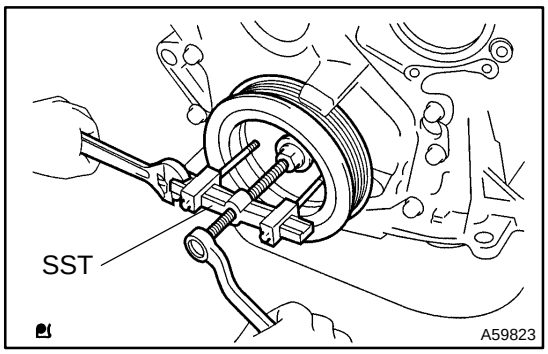

(b) Using SST, remove the crankshaft pulley.
SST 09950–50013 (09951–05010, 09952–05010, 09953–05020, 09954–05021, 09957–04010)

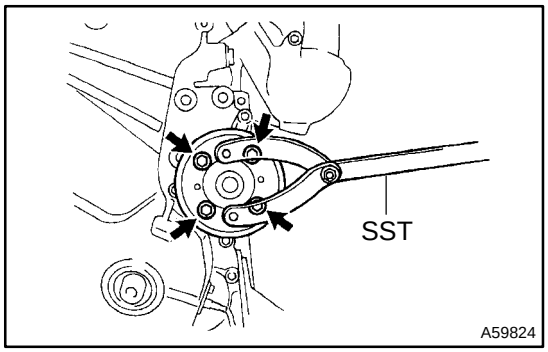

16. REMOVE WATER PUMP PULLEY

(a) Using SST, remove the water pump pulley.
SST 09960–10010

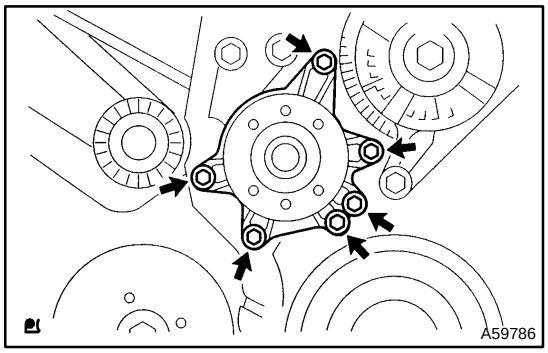

17. REMOVE WATER PUMP ASSY

(a) Remove the 6 bolts and water pump.

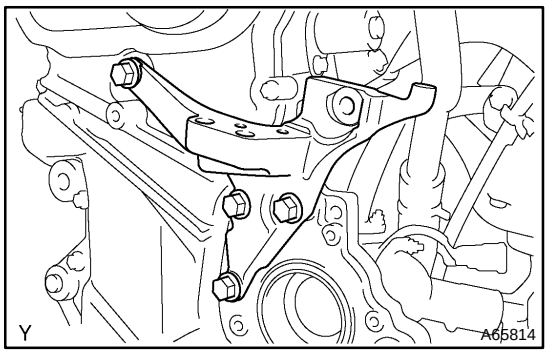

18. REMOVE TRANSVERSE ENGINE ENGINE MOUNTING BRACKET

(a) Remove the 4 bolts and the engine mounting bracket.

19. REMOVE COMPRESSOR AND MAGNETIC CLUTCH (W/ AIR CONDITIONER) (See page 55–34)

HINT:

Hung up the hoses instead of detaching.

20. REMOVE CRANK POSITION SENSOR

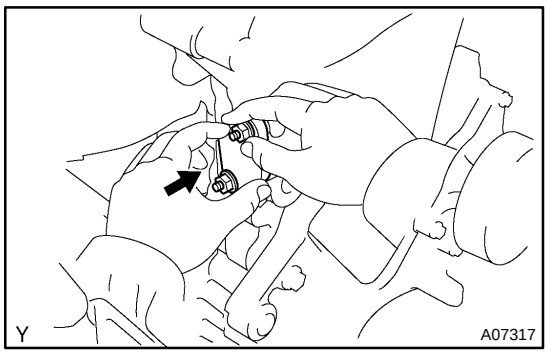

21. REMOVE CHAIN TENSIONER ASSY NO.1

(a) Remove the 2 nuts and chain tensioner assy No. 1.

NOTICE:

Be sure not to revolve the crankshaft without the chain tensioner.

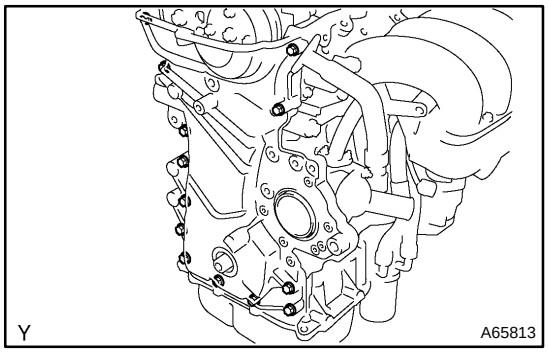

22. REMOVE TIMING CHAIN OR BELT COVER SUB–ASSY

(a) Remove the 12 bolts.

(b) Using a torx wrench socket (E8), remove the stud bolt.

(c) Remove the timing chain cover and 2 gaskets.

NOTICE:

Be careful no tot damage the contact surfaces of the timing chain cover, cylinder head and cylinder block.

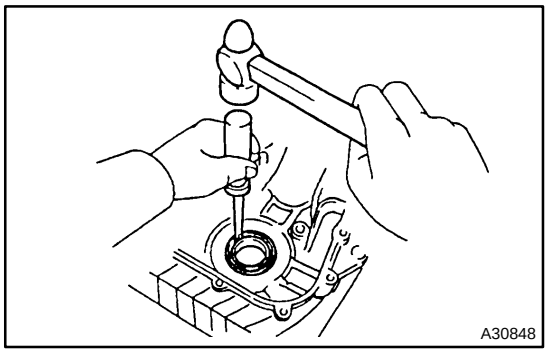

23. REMOVE TIMING GEAR COVER OIL SEAL

(a) Using a screwdriver, remove the oil seal.

24. REMOVE CRANKSHAFT POSITION SENSOR PLATE NO.1

25. REMOVE CHAIN TENSIONER SLIPPER

(a) Remove the bolt and the chain tensioner slipper.

26. REMOVE CHAIN VIBRATION DAMPER NO.1

(a) Remove the 2 bolts and chain vibration damper No. 1.

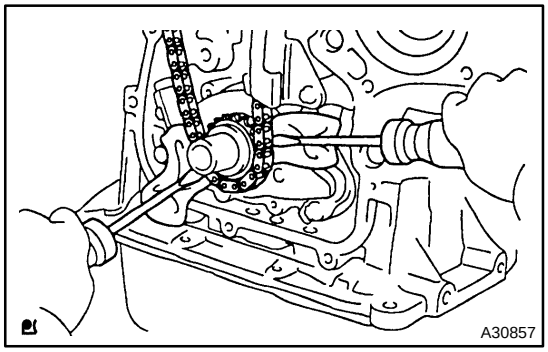

27. REMOVE CHAIN SUB–ASSY

(a) Remove the timing chain with the crankshaft timing gear plying screwdrivers as shown in the illustration.

NOTICE:

- **Put shop rag to protect the engine.**
- **In case of revolving the camshafts with the chain off the sprockets, turn the crankshaft 1/4 revolution for valves not to touch the pistons.**

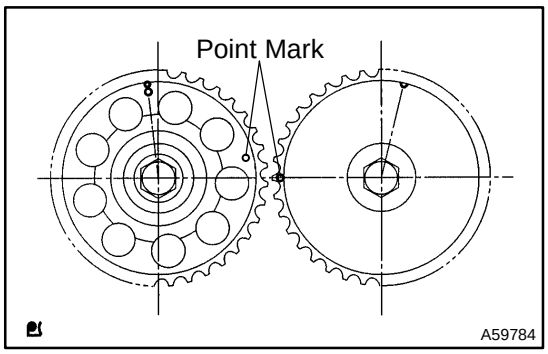

28. INSTALL CHAIN SUB–ASSY

(a) Set No. 1 cylinder to TDC/compression.

(1) Turn the hexagonal wrench head portion of the camshafts, and align the point marks of the camshaft timing sprockets.

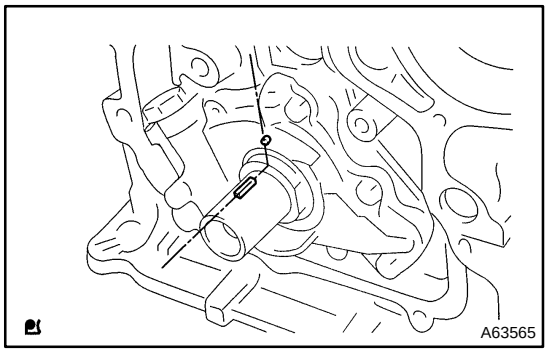

(2) Turn the crankshaft and set the set key on the crankshaft upward.

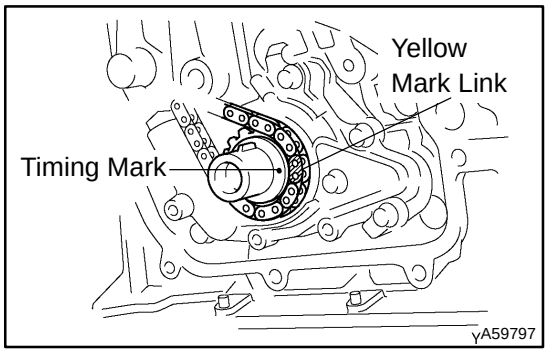

(b) Install the timing chain on the crankshaft timing sprocket with the yellow mark link aligned with the timing mark on the crankshaft timing sprocket.

HINT:

Three yellow color links are on the chain.

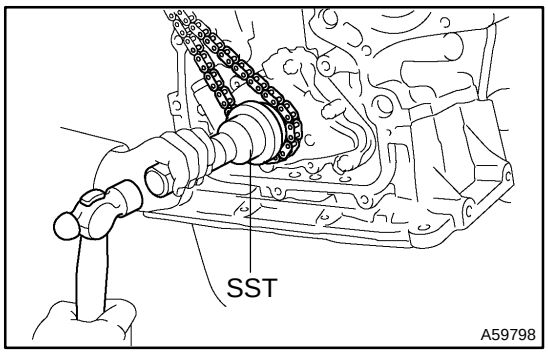

(c) Using a SST, install the sprocket.

SST 09223–22010

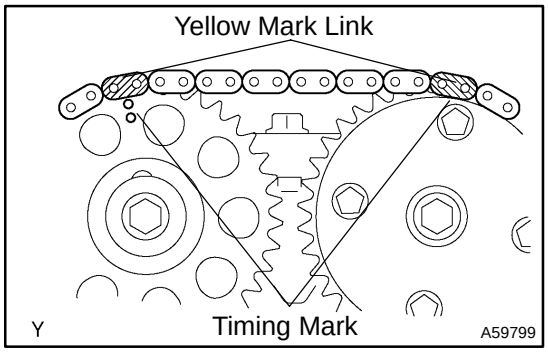

(d) Install the timing chain on the camshaft timing sprockets with the yellow mark links aligned with the timing marks on the camshaft timing sprockets.

29. INSTALL CHAIN VIBRATION DAMPER NO.1

(a) Install the chain vibration damper No. 1 with the 2 bolts.
Torque: 21 N·m (214 kgf·cm, 15 ft·lbf)

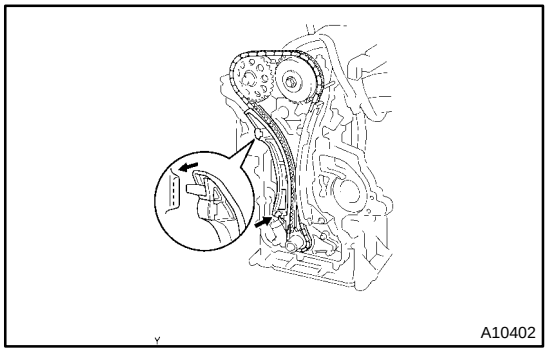

30. INSTALL CHAIN TENSIONER SLIPPER

(a) Install the chain tensioner slipper with the bolt.
Torque: 21 N·m (214 kgf·cm, 15 ft·lbf)

(b) Check that the chain tensioner slipper moves is caught on the cylinder head stopper.

NOTICE:
Do not turn the crankshaft.

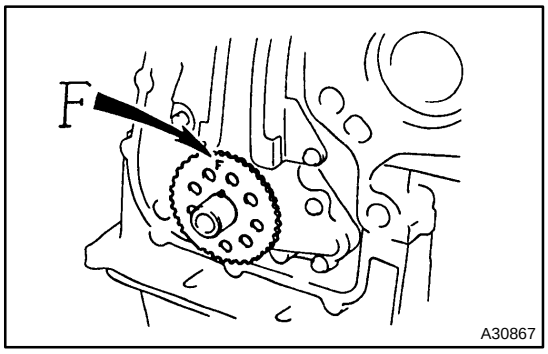

31. INSTALL CRANKSHAFT POSITION SENSOR PLATE NO.1

(a) Install the plate with the ”F” mark facing forward.

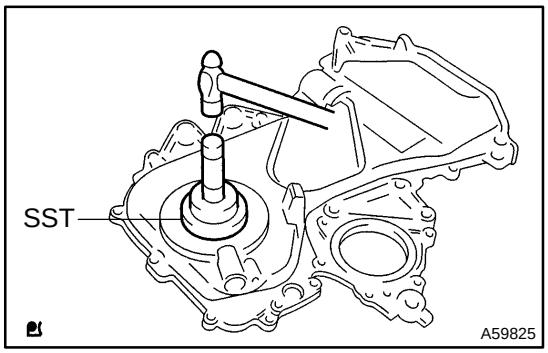

32. INSTALL TIMING GEAR COVER OIL SEAL

(a) Apply MP grease to the oil seal lip.

(b) Using SST and a hammer, tap in a new oil seal until its surface is flush with the timing chain cover edge.
SST 09223–22010

NOTICE:
Keep the lip off foreign materials.

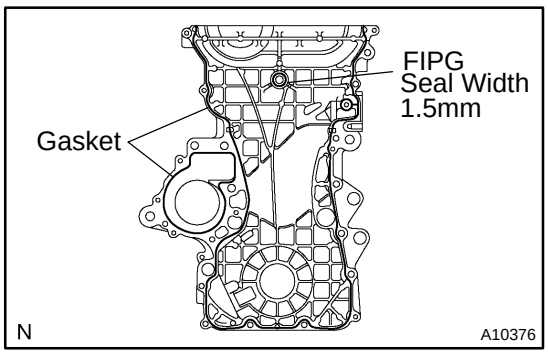

33. INSTALL TIMING CHAIN OR BELT COVER SUB–ASSY

(a) Remove any old packing (FIPG) material and be careful not to drop any oil on the contact surface of the timing chain cover, cylinder head and cylinder block.
- Using a razor blade and a gasket scraper, remove all the old packing (FIPG) material from the gasket surfaces and sealing grooves.
- Thoroughly clean all components to remove all the loose material.
- Using a non–residue solvent, clean both sealing surfaces.

(b) Apply seal packing to the timing chain cover an shown in the illustration.
Seal packing:
Part No. 08826–00100 or equivalent
- Install a nozzle that has been cut to a 1.5 mm opening.

HINT:
Avoid applying an excessive amount to the surface.
- Parts must be assembled within 3 minutes of application. Otherwise the material must be removed and reapplied.
- Immediately remove nozzle from the tube and reinstall cap.

(c) Install the 2 gaskets to the timing chain cover an shown in the illustration.

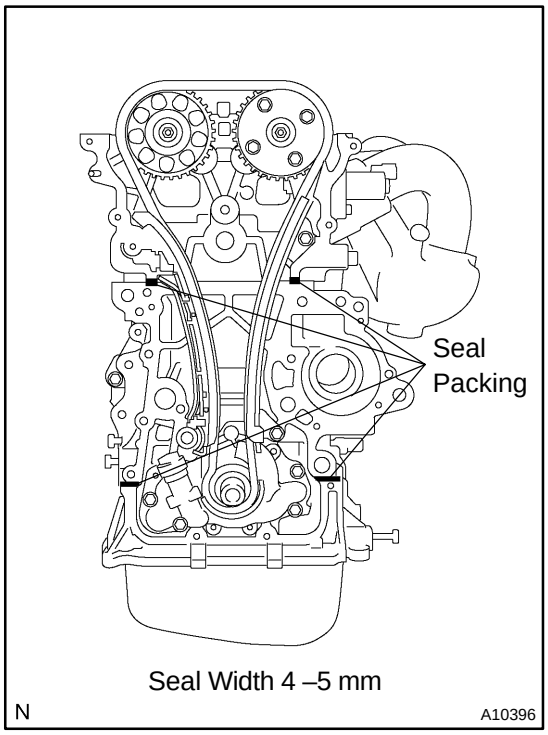

(d) Apply seal packing to 4 locations an shown in the illustration.
Seal packing:
Part No. 08826–00080 or equivalent
- Install a nozzle that has been cut to a 4 – 5 mm (0.16 – 0.20 in.)opening.

HINT:
Avoid applying an excessive amount to the surface.
- Parts must be assembled within 3 minutes of application. Otherwise the material must be removed and reapplied.
- Immediately remove nozzle from the tube and reinstall cap.

NOTICE:
Do not put into engine oil within 2 hours after installing.

(e) Install the timing chain cover, with the 12 bolts and nut.
Torque:
21 N·m (214 kgf·cm, 15 ft·lbf) (M8)
11 N·m (112 kgf·cm, 8 ft·lbf) (M6)

(f) Install the stud bolt.
Torque: 9.5 N·m (97 kgf·cm, 84 in.·lbf)

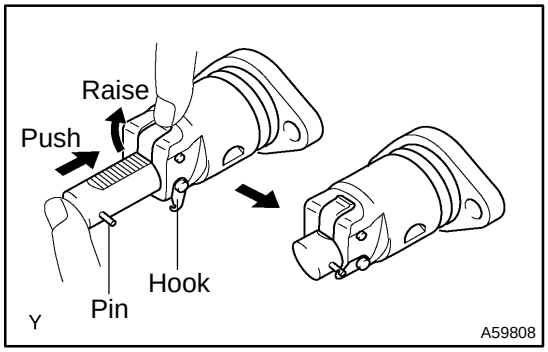

34. INSTALL CHAIN TENSIONER ASSY NO.1

(a) Check the O–ring is clean, and set the hook as shown in the illustration.

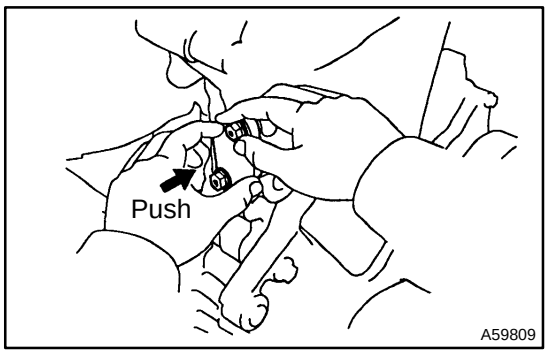

(b) Apply engine oil to the chain tensioner and install it.
Torque: 9.0 N·m (92 kgf·cm, 80 in.·lbf)

NOTICE:
When installing the tensioner, set the hook again if the hook release the plunger.

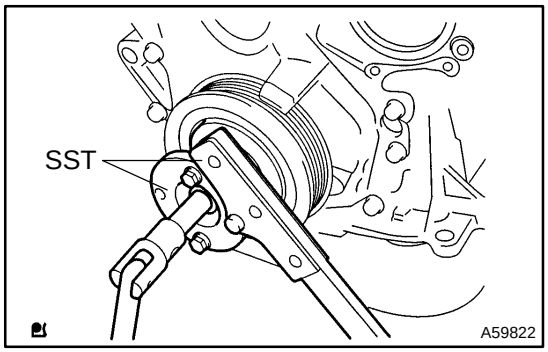

35. INSTALL CRANKSHAFT PULLEY

(a) Align the pulley set key with the key groove of the pulley, and slide on the pulley.

(b) Using SST, install the pulley bolt.
SST 09213–70011 (09213–70020), 09330–00021
Torque: 118 N·m (1,203 kgf·cm, 87 ft·lbf)

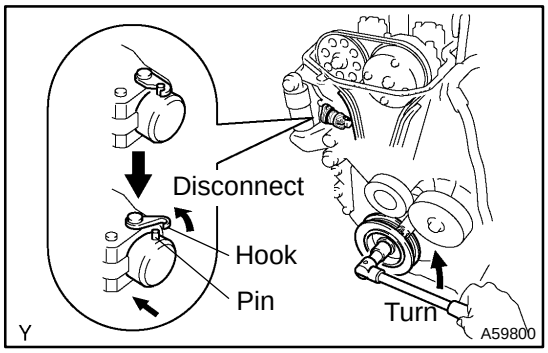

(c) Turn the crankshaft counterclockwise, and disconnect the plunger knock pin form the hook.

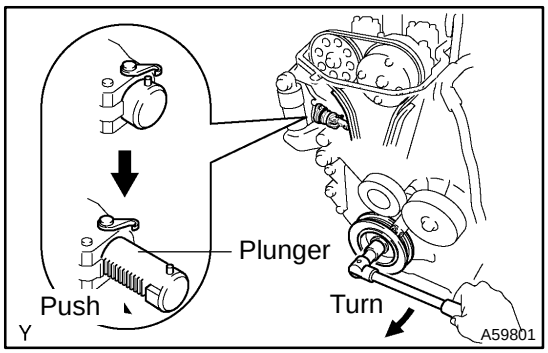

(d) Turn the crankshaft clockwise, and check that the slipper is pushed by the plunger.

36. INSTALL CRANK POSITION SENSOR
Torque: 9.0 N·m (92 kgf·cm, 80 in.·lbf)

37. INSTALL COMPRESSOR AND MAGNETIC CLUTCH (W/ AIR CONDITIONER) (See page 55–34)

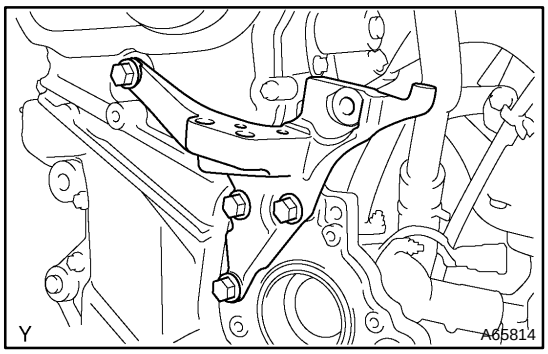

38. INSTALL TRANSVERSE ENGINE ENGINE MOUNTING BRACKET

(a) Install the engine mounting bracket with the 4 bolts.
Torque: 49 N·m (500 kgf·cm, 36 ft·lbf)

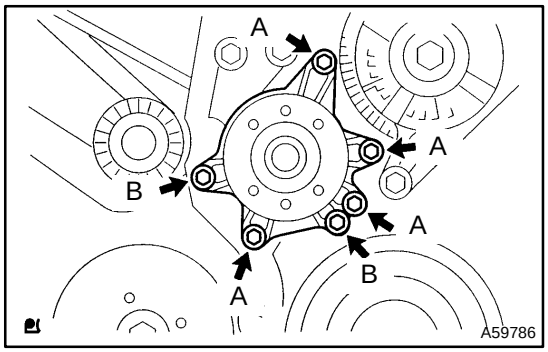

39. INSTALL WATER PUMP ASSY

(a) Place a new O–ring on the timing chain cover.
(b) Install the water pump with the 6 bolts.
Torque: 9.0 N·m (92 kgf·cm, 80 in.·lbf)

HINT:
Each bolt length is indicated in the illustration.

Bolt A	35 mm (1.38 in.)
Bolt B	28 mm (1.10 in.)

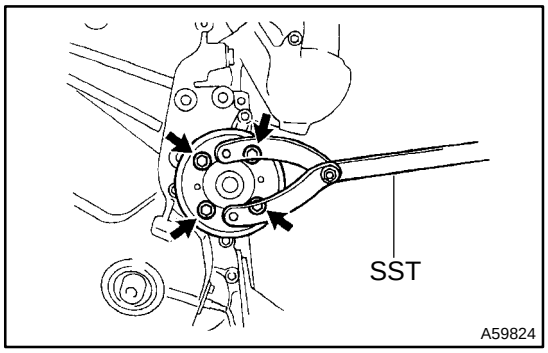

40. INSTALL WATER PUMP PULLEY

(a) Using SST, install the water pump pulley.
SST 09960–10010 (09962–01000, 09963–00600)
Torque: 15 N·m (153 kgf·cm, 11 ft·lbf)

41. INSTALL V–RIBBED BELT TENSIONER ASSY
Torque:
Nut: 29 N·m (296 kgf·cm, 21 ft·lbf)
Bolt: 100 N·m (1,020 kgf·cm, 74 ft·lbf)

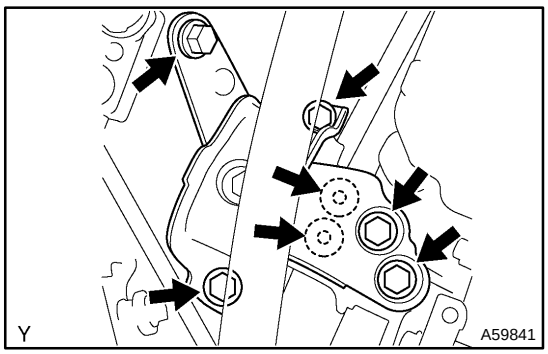

42. INSTALL ENGINE MOUNTING INSULATOR SUB–ASSY RH

(a) Install the engine mounting insulator sub–assy RH with the 5 bolts and the 2 nuts.
Torque: 52 N·m (530 kgf·cm, 38 ft·lbf)

43. INSTALL CYLINDER HEAD COVER SUB–ASSY

(a) Remove any old packing (FIPG) material.

HINT:
When FIPG on the head cover gasket side cannot be eliminated completely, replace the gasket.

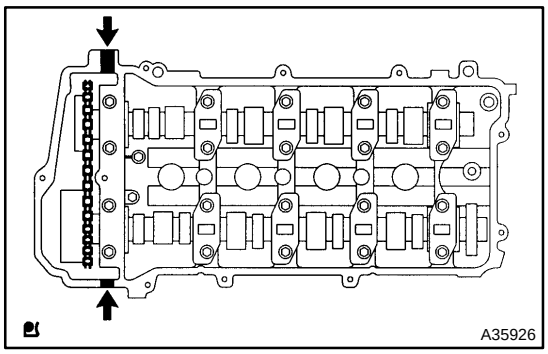

(b) Apply seal packing to 2 locations as shown in the illustration.
Seal packing:
Part No. 08826–00080 or equivalent

(c) Install the cylinder head cover gasket to the cylinder head cover.

HINT:
Part must be assembled within 3 minutes of application. Otherwise the material must be remove and reapplied.

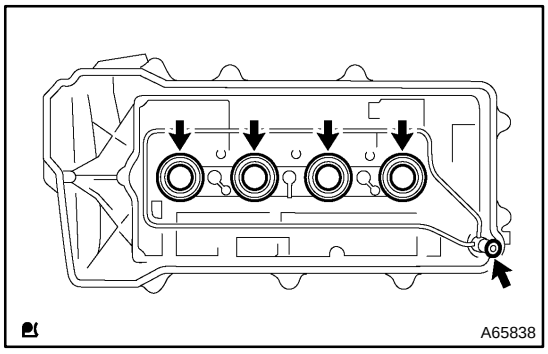

(d) Install the new spark plug tube gasket and a new O–ring to the cylinder head cover.

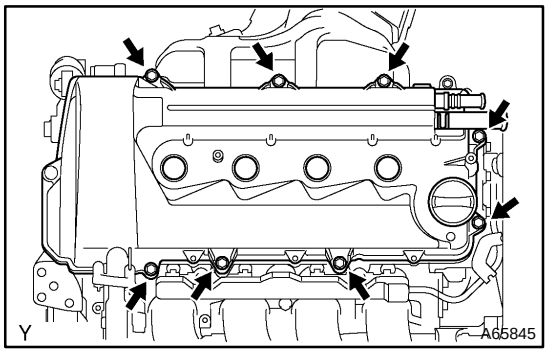

(e) Install the cylinder head cover and wire harness protector with the 9 bolts. Uniformly tighten the bolts, in the several passes, in the sequence shown.
Torque: 10 N·m (102 kgf·cm, 7 ft·lbf)

(f) Connect the 2 PCV hoses to the cylinder head cover.

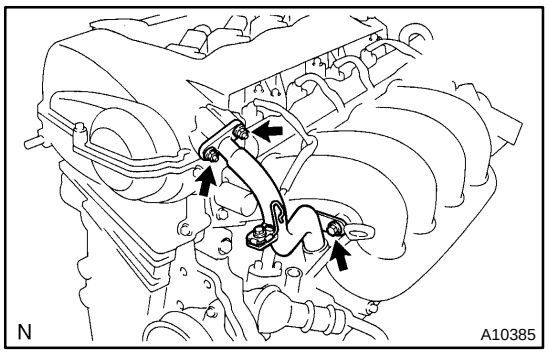

(g) Install a new gasket and No. 1 ventilation pipe with 2 nuts and bolt.
Torque:
Nut 10 N·m (102 kgf·cm, 7 ft·lbf)
Bolt 24 N·m (245 kgf·cm, 18 ft·lbf)

(h) Connect the No. 3 ventilation hose to the No. 1 ventilation pipe.

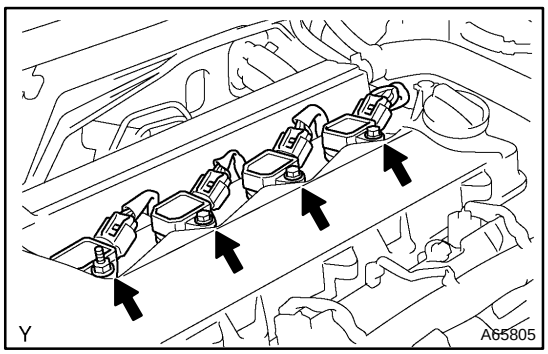

44. INSTALL IGNITION COIL ASSY
Torque: 9.0 N·m (92 kgf·cm, 80 in.·lbf)

45. INSTALL GENERATOR ASSY (See page 19–15)
46. INSTALL GENERATOR BRACKET NO.1(See page 19–15)

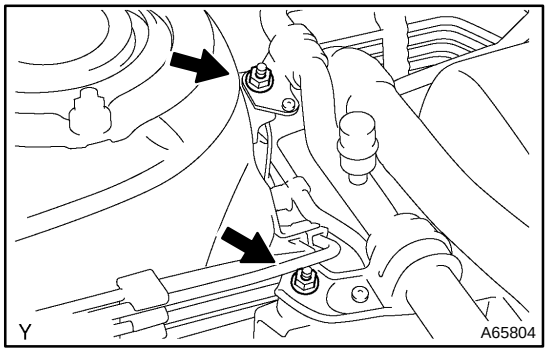

47. INSTALL SUCTION HOSE SUB–ASSY
Torque: 9.8 N·m (100 kgf·cm, 87 in.·lbf)

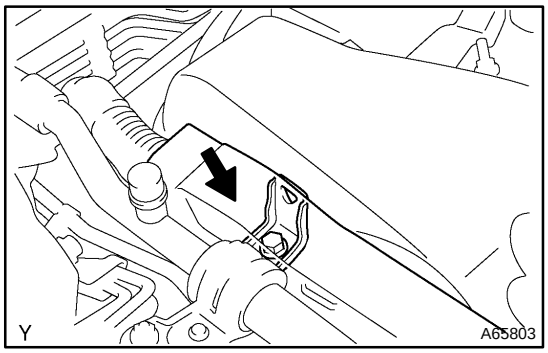

48. INSTALL WIRE HARNESS CLAMP
Torque: 10 N·m (102 kgf·cm, 7 ft·lbf)

49. INSTALL CYLINDER HEAD COVER NO.2
Torque: 7.0 N·m (71 kgf·cm, 62 in.·lbf)
50. ADD COOLANT (See page 16–6)
51. CHECK ENGINE COOLANT LEAK (See page 16–1)
52. INSPECT OIL LEAK

CAMSHAFT (1ZZ–FE)

COMPONENTS

140OI–02

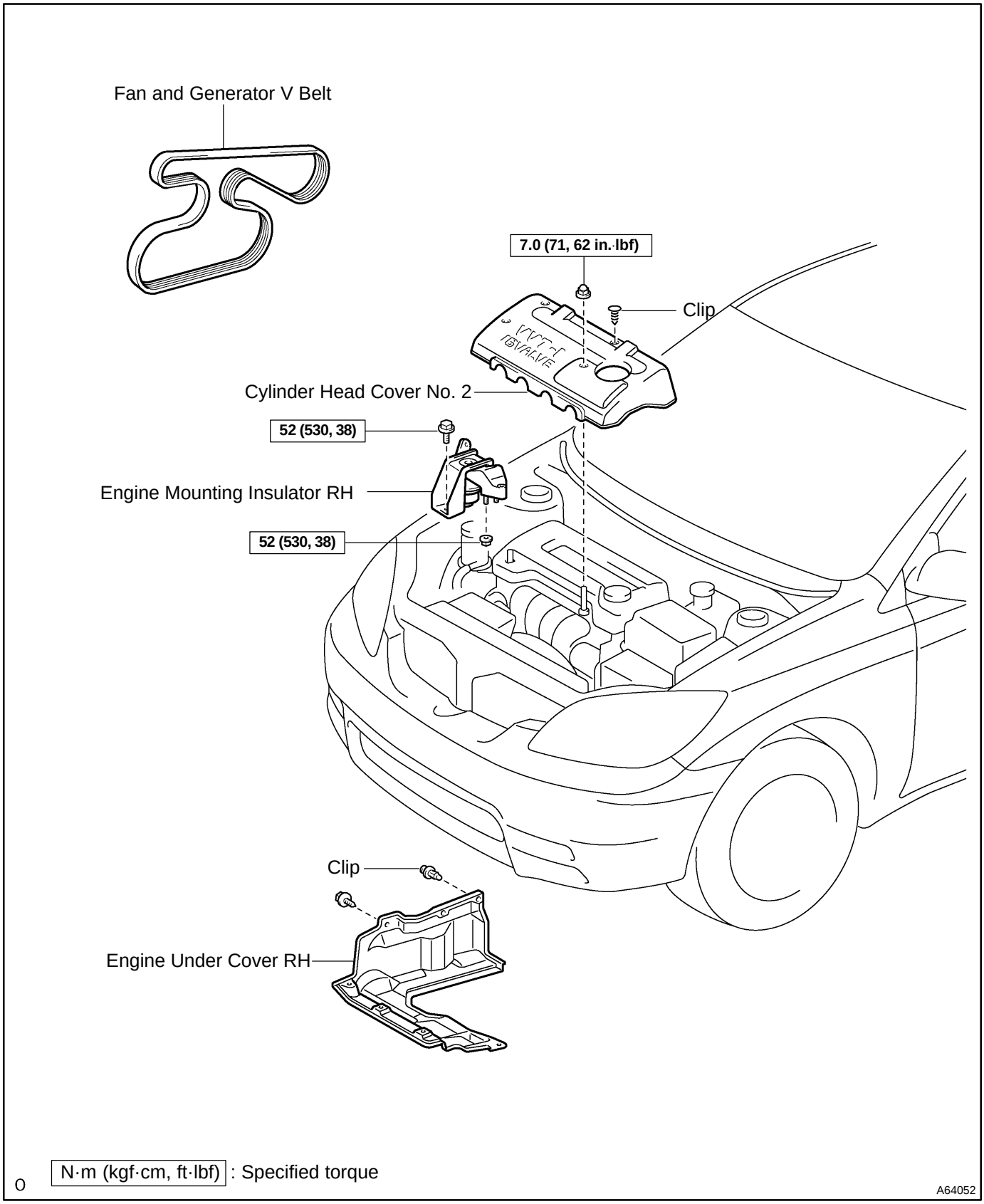

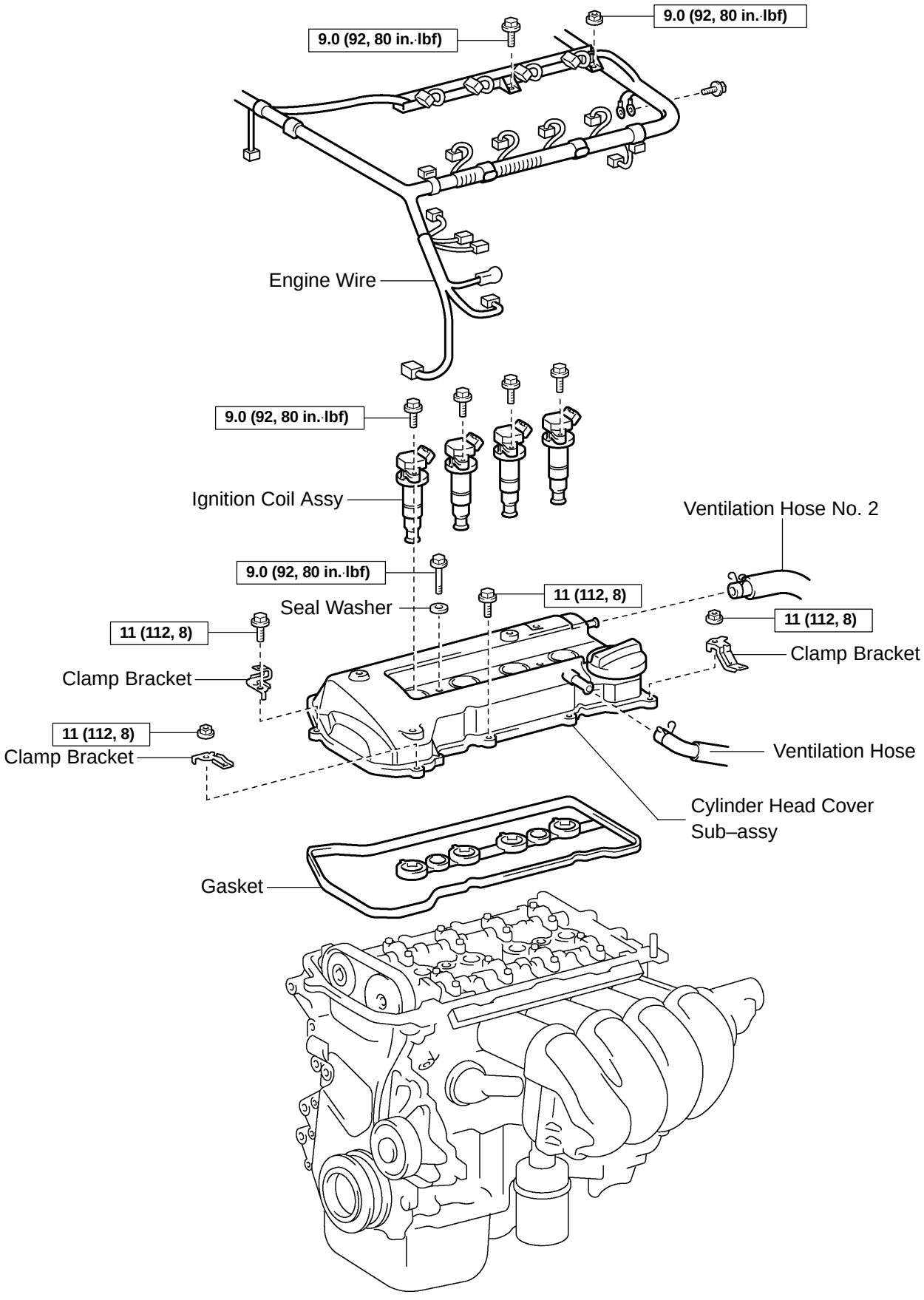
9.0 (92, 80 in.·lbf)
9.0 (92, 80 in.·lbf)
Engine Wire
9.0 (92, 80 in.·lbf)
Ignition Coil Assy
Ventilation Hose No. 2
9.0 (92, 80 in.·lbf)
Seal Washer
11 (112, 8)
11 (112, 8)
11 (112, 8)
Clamp Bracket
Clamp Bracket
11 (112, 8)
Clamp Bracket
Ventilation Hose
Cylinder Head Cover Sub–assy
Gasket
N·m (kgf·cm, ft·lbf) : Specified torque
A64043

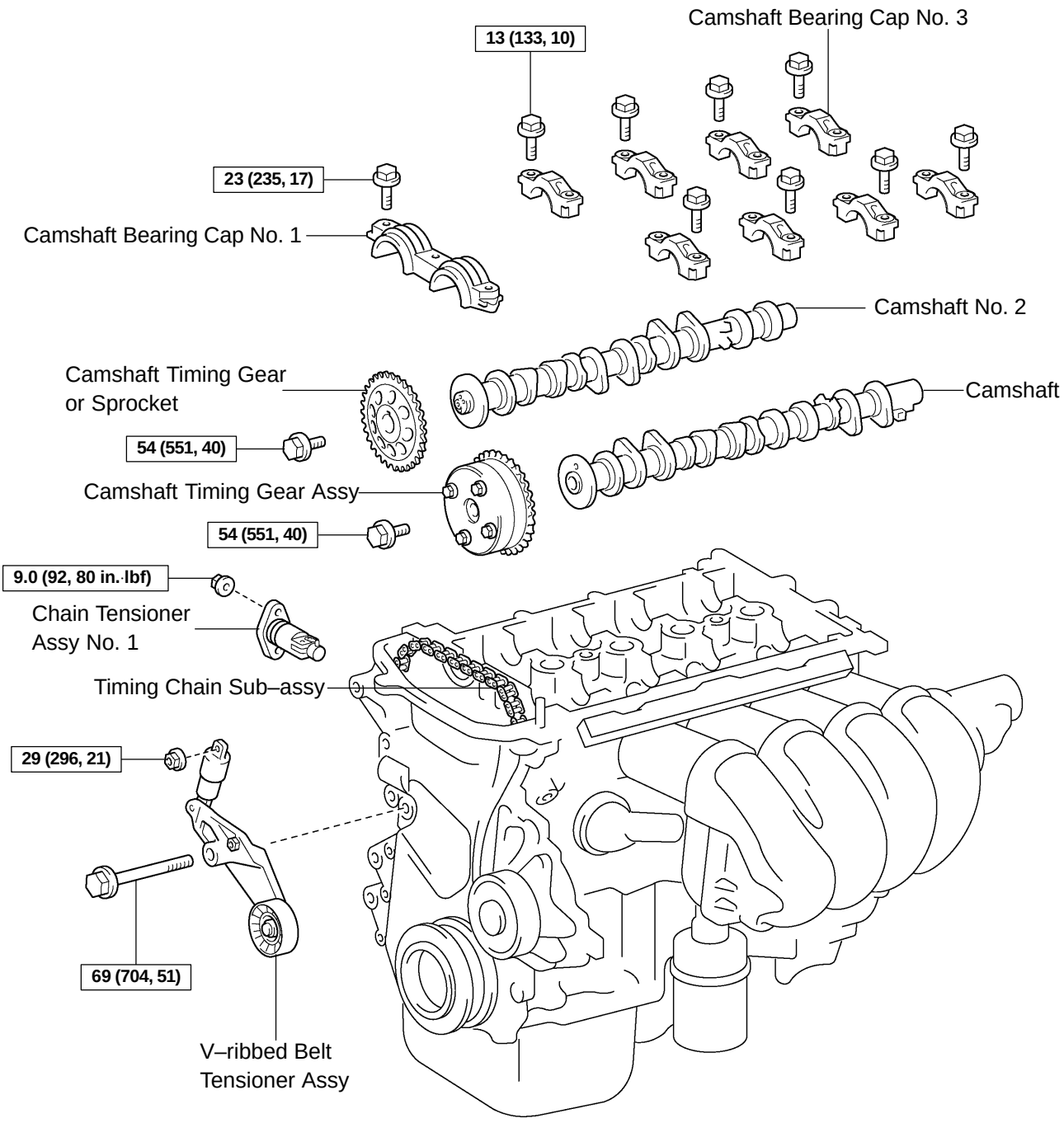

N·m (kgf·cm, ft·lbf) : Specified torque

A64006

140OJ–02

REPLACEMENT

1. REMOVE ENGINE UNDER COVER RH

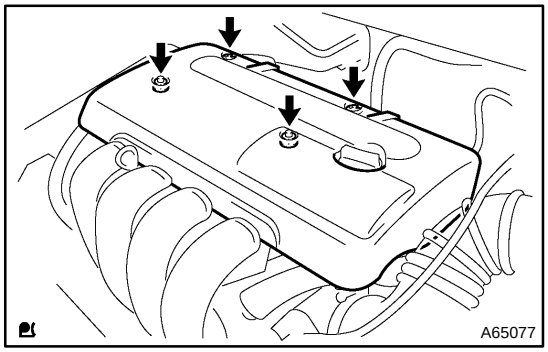

2. REMOVE CYLINDER HEAD COVER NO.2

(a) Remove the 2 screw, 3 clips and engine under cover.

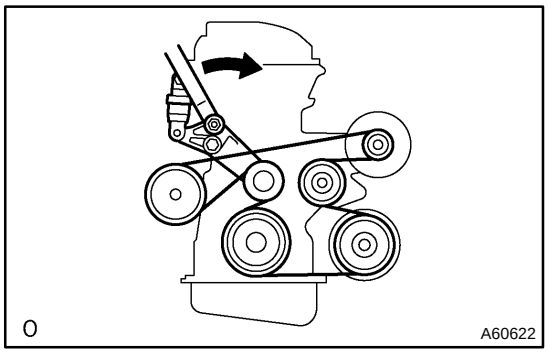

3. REMOVE FAN AND GENERATOR V BELT

(a) Turn the V–ribbed belt tensioner slowly clockwise and loosen it. Then, remove the fan and generator V belt and put back the V–ribbed belt tensioner little by little and fix it quietly.

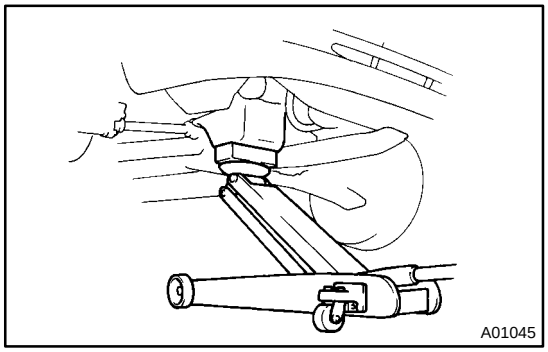

4. REMOVE ENGINE MOUNTING INSULATOR SUB–ASSY RH

(a) Remove the PS oil pump reservoir and put it aside.

(b) Place a wooden block between the jack and engine, and set the jack, then remove the 4 bolts, the 2 nuts and engine mounting insulator RH.

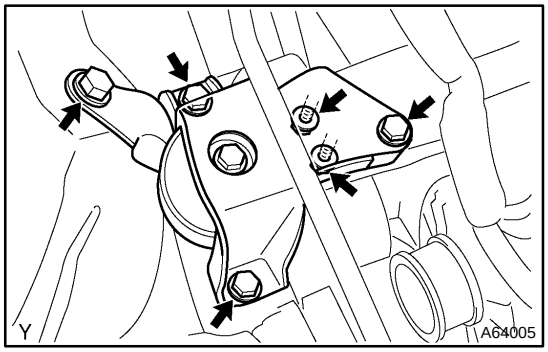

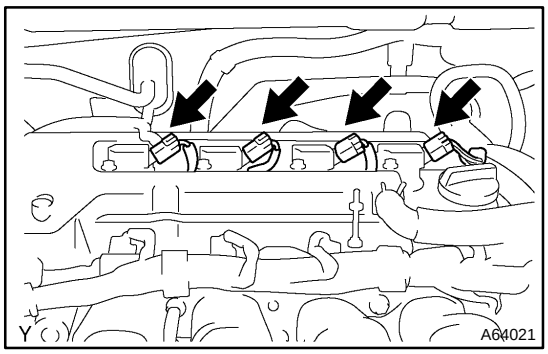

5. DISCONNECT ENGINE WIRE

(a) Remove the 5 clamps from the 5 clamp brackets.

(b) Disconnect the 4 ignition coil connectors.

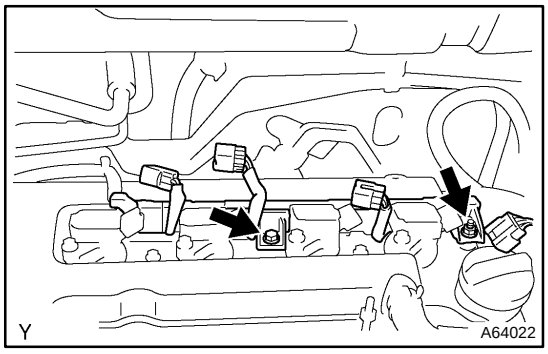

(c) Remove the bolt and nut installing the engine wire.

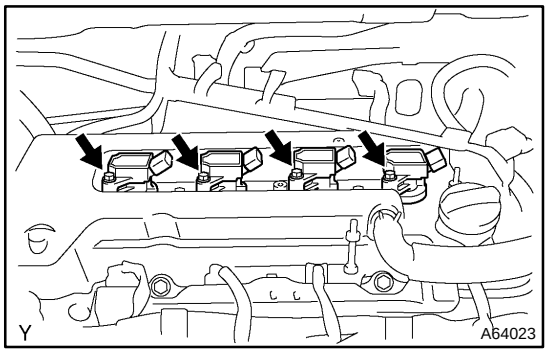

6. REMOVE IGNITION COIL ASSY

(a) Remove the 4 bolts and 4 ignition coils.

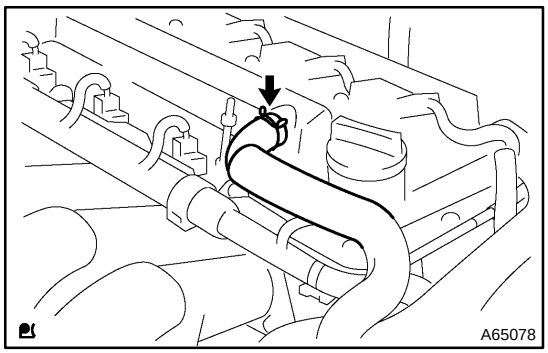

7. DISCONNECT VENTILATION HOSE

(a) Disconnect the ventilation hose from the cylinder head cover.

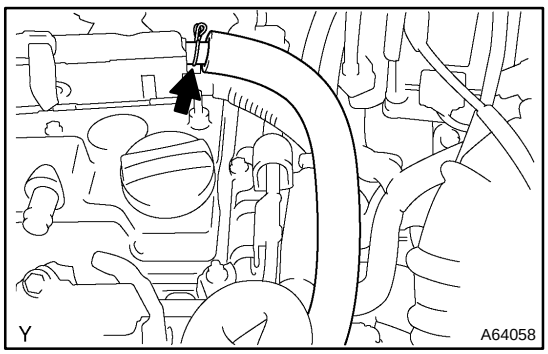

8. DISCONNECT VENTILATION HOSE NO.2

(a) Disconnect the ventilation hose from the cylinder head cover.

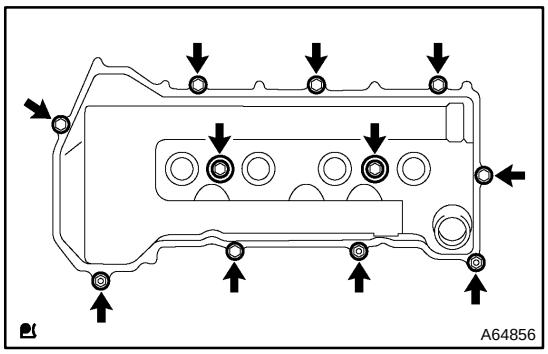

9. REMOVE CYLINDER HEAD COVER SUB–ASSY

(a) Remove the 9 bolts, 2 seal washers, 2 nuts, 3 clamp brackets and cylinder head cover.

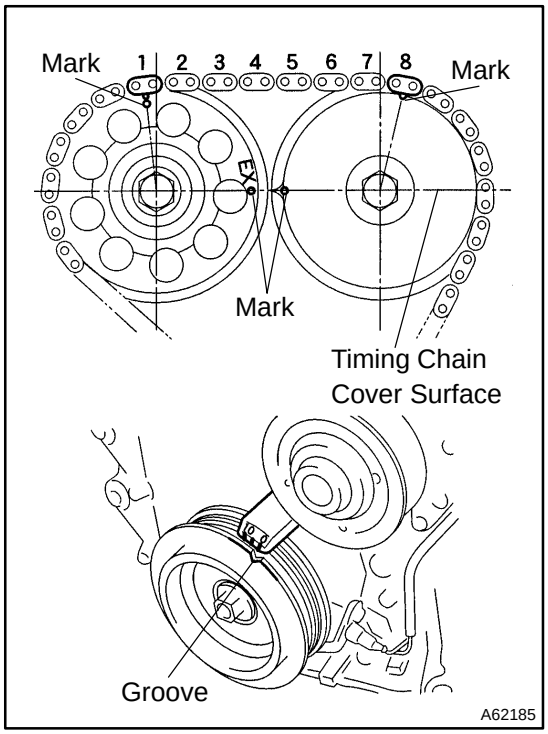

10. SET NO.1 CYLINDER TO TDC/COMPRESSION

(a) Turn the crankshaft pulley, and align its groove with timing mark ”0” of the timing chain cover.

(b) Check that the point marks of the camshaft timing sprocket and VVT timing sprocket are in straight line on the timing chain cover surface as shown in the illustration.

HINT:

If not, turn the crankshaft 1 revolution (360°) and align the marks as above.

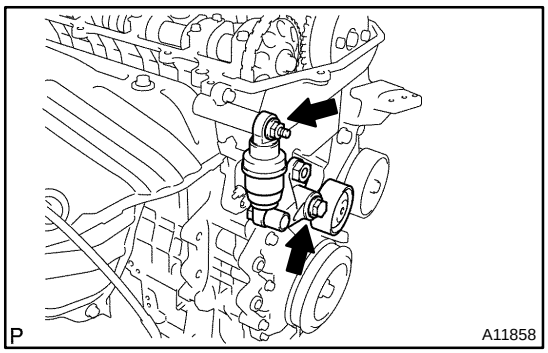

11. REMOVE V–RIBBED BELT TENSIONER ASSY

(a) Remove the bolt, nut and V–ribbed belt tensioner.

HINT:

Handle a jack up and down to remove the bolt.

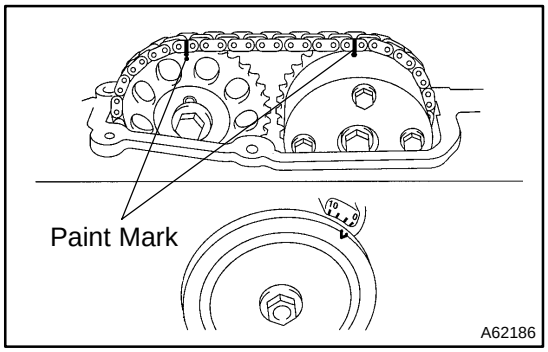

12. REMOVE CAMSHAFT

NOTICE:

Be sure not to revolve the crankshaft without the chain tensioner.

(a) Set the No. 1 cylinder to the TDC/compression.

(b) Place match marks on the timing chain and camshaft timing sprockets.

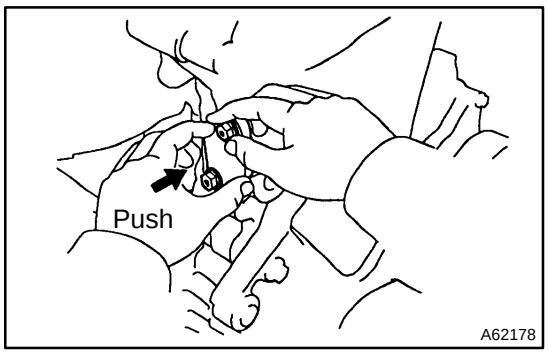

(c) Remove the 2 nuts and chain tensioner.

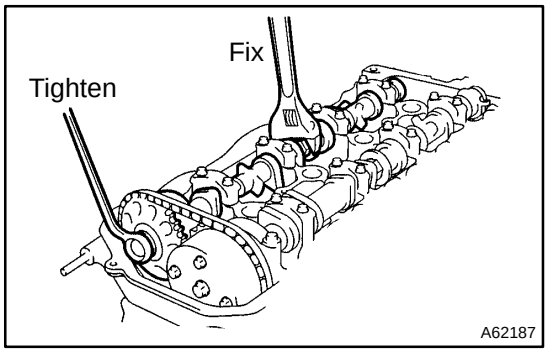

(d) Fix the camshaft with a wrench and so on, then loosen the camshaft timing gear set bolt.

NOTICE:
Be careful not to damage the valve lifter.

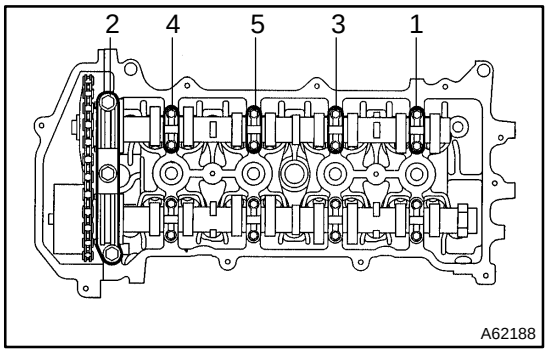

(e) Loosen the camshaft bearing cap bolts on No. 2 camshaft in the order as shown in the illustration in several passes,and remove the caps.

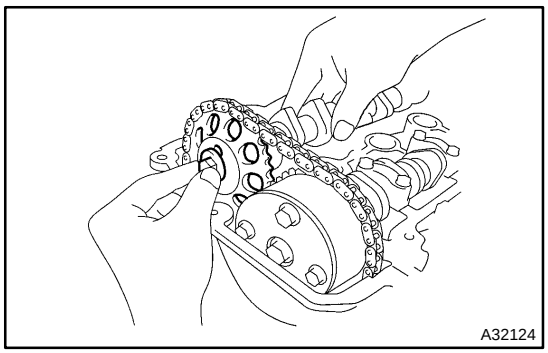

(f) Remove the camshaft timing gear as shown in the illustration.

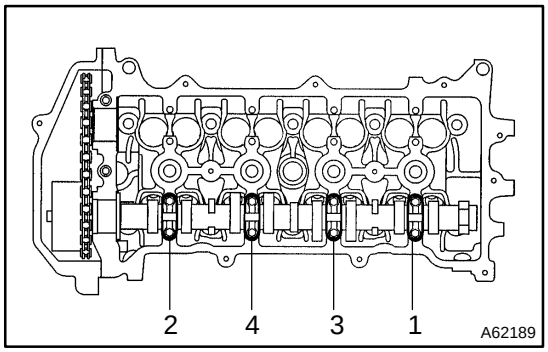

(g) Loosen the camshaft bearing cap bolts on camshaft in the order as shown in the illustration in several passes,and remove the caps.

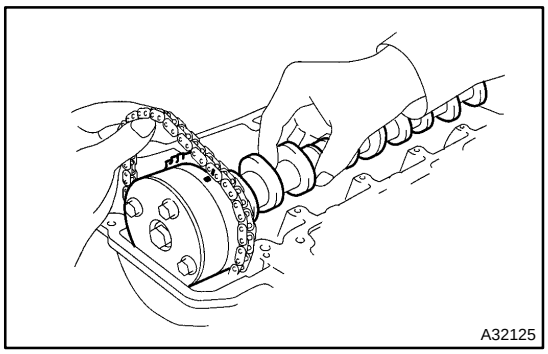

(h) Remove the camshaft with holding the timing chain.

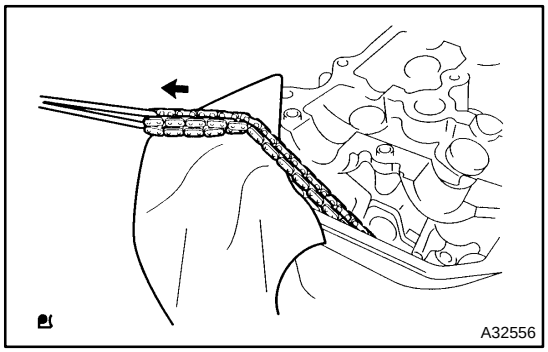

(i) Tie the timing chain with a string as shown in the illustration.

NOTICE:

Be careful not to drop anything inside the timing chain cover.

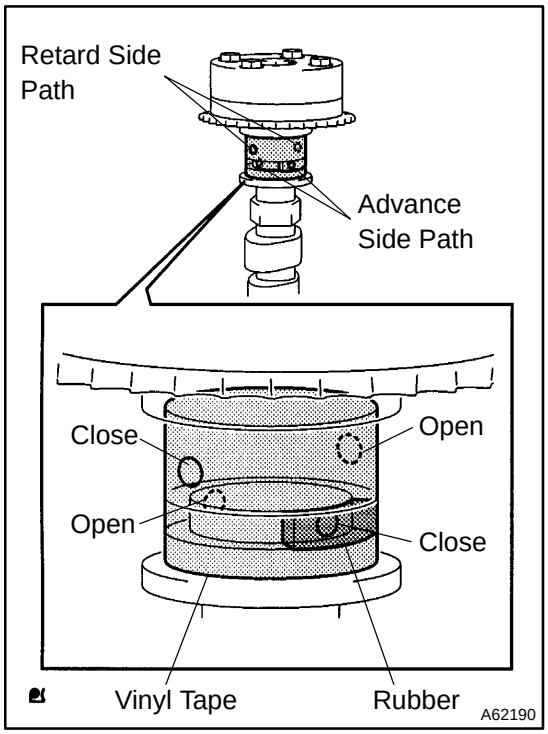

13. INSPECT CAMSHAFT TIMING GEAR ASSY

(a) Check the lock of camshaft timing gear.

(1) Grip the camshaft with a vice, and confirm the camshaft timing gear is locked.

NOTICE:

Be careful not to damage the camshaft.

(b) Release lock pin.

(1) Cover 4 oil paths of cam journal with vinyl tape as shown in the illustration.

HINT:

Two advance side paths are provided in the groove of the camshaft. Plug one of the path with a rubber piece.

(2) Break through the tapes of the advance side path and the retard side path on the opposite side of the groove.

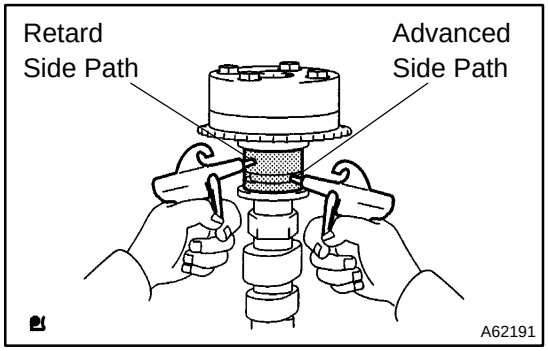

(3) Put air pressure into two broken paths (the advance side path and the retard side path) with about 150 kPa {1.5 kgf·cm}.

CAUTION:

Cover the pathes with shop rag to avoid oil splashing.

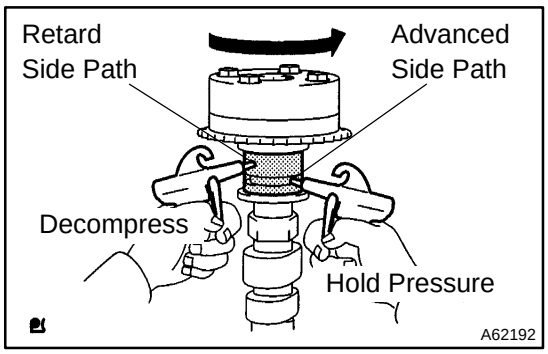

(4) Confirm if the camshaft timing gear assembly revolves in the timing advance direction when weakening the air pressure of the timing retard path.

HINT:

The lock pin is released, and camshaft timing gear, revolves in the advance direction.

(5) When the camshaft timing gear comes to the most advanced position, take out the air pressure of the timing retard side path, and then, take out that of timing advance side path.

CAUTION:

Camshaft timing assembly gear occasionally shifts to the retard side abruptly, if the air compression of the advanced side path is released before retard side path. It often causes the breakage of the lock pin.

(c) Check smooth revolution

(1) Revolve the camshaft timing gear assembly within the movable range except for the most retarded position several times, and check the smooth revolution.

CAUTION:

Be sure to perform this check by hand, instead of air pressure.

(d) Check the lock in the most retarded position.

(1) Confirm that the camshaft timing gear assembly is locked at the most retarded position.

14. REMOVE CAMSHAFT TIMING GEAR ASSY

(a) Grip the camshaft with a vice, and confirm that it the gear locked.

CAUTION:

Be careful not to damage the camshaft.

(b) Cover 4 oil paths of cam journal with vinyl tape as shown in the illustration.

HINT:

Two advance side paths are provided in the groove of the camshaft. Plug one of the path with a rubber piece.

(c) Break through the tapes of the advance side path and the retard side path on the opposite side of the groove.

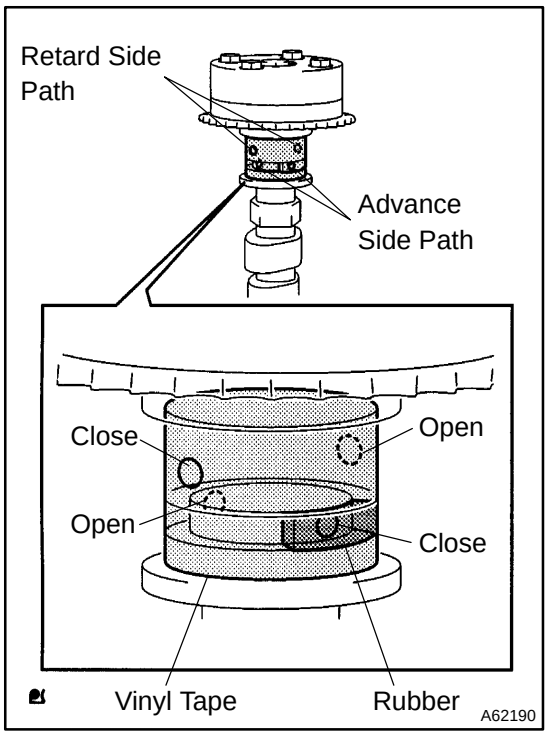

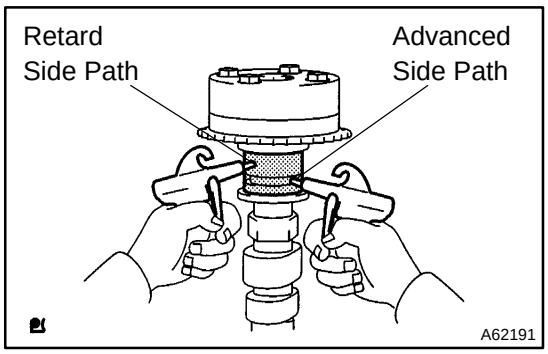

(d) Put air pressure into two broken paths (the advance side path and the retard side path) with about 150 kPa {1.5 kgf·cm}.

CAUTION:

Cover the pathes with shop rag to avoid oil splashing.

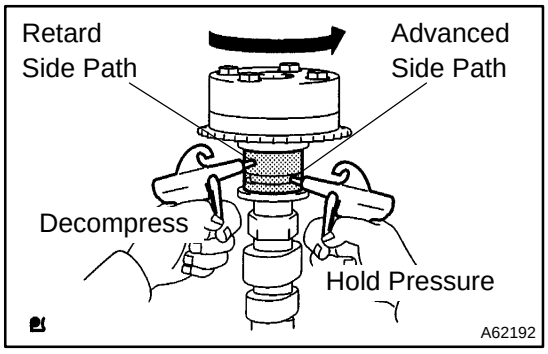

(e) Confirm if the camshaft timing gear assembly revolves in the timing advance direction when weakening the air pressure of the timing retard path.

HINT:

The lock pin is released, and camshaft timing gear revolves in the advance direction.

(f) When the camshaft timing gear comes to the most advanced position, take out the air pressure of the timing retard side path, and then, takeout that of timing advance side path.

CAUTION:

Camshaft timing gear assembly occasionally shifts to the retard side abruptly, if the air compression of the advanced side path is released before retard side paths. It often causes the breakage of the lock pin.

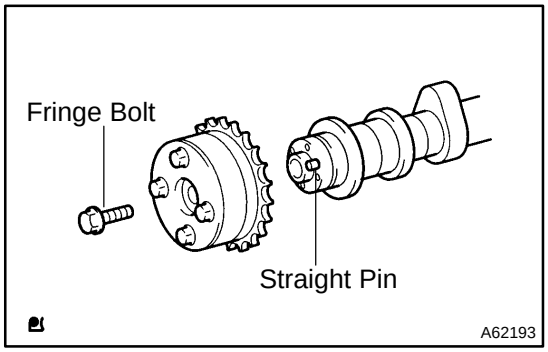

(g) Remove the fringe bolt of camshaft timing gear assembly.

NOTICE:

- **Be sure not to remove the other 4 bolts.**
- **In case of reusing the camshaft timing gear, release the strait pin locking first, and then install the gear.**

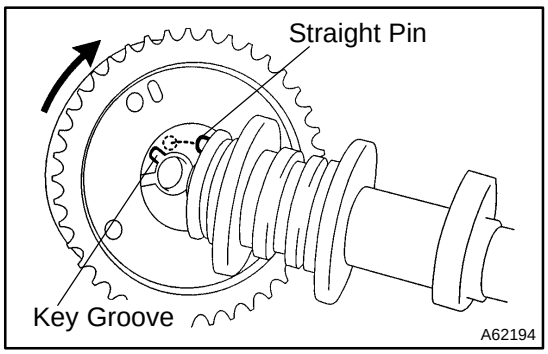

15. INSTALL CAMSHAFT TIMING GEAR ASSY

(a) Put the camshaft timing gear assembly and the camshaft together with the straight pin off the key groove.

(b) Turn the camshaft timing gear assembly to the left direction (as shown in the illustration) with pushing it lightly against the camshaft. Push further at the position where the pin gets into the groove.

CAUTION:

Be sure not to turn the camshaft timing gear to the retard angle side (to the right angle).

(c) Check that there is no clearance between the gear's fringe and the camshaft.

(d) Tighten the fringe bolt with the camshaft timing gear fixed.

Torque: 54 N·m (551 kgf·cm 40 ft·lbf)

(e) Check that the camshaft timing gear assembly can move to the retard angle side (the right angle), and is locked at the most retarded position.

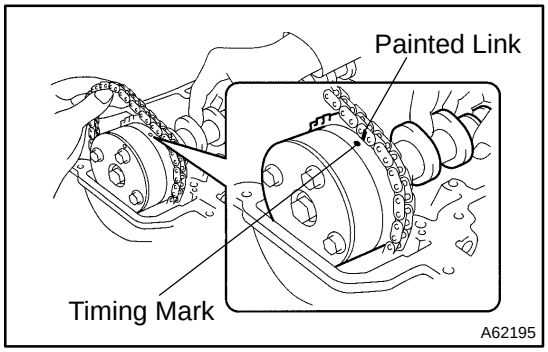

16. INSTALL CAMSHAFT

(a) As shown in the illustration, install the timing chain on the camshaft timing gear, with the painted links aligned with the timing marks on the camshaft timing gear.

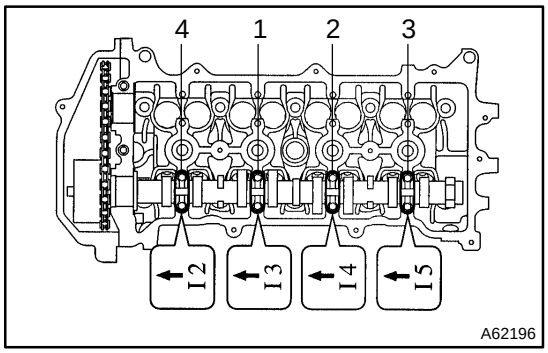

(b) Examine the front marks and numbers and tighten the bolts in the order shown in the illustration.
Torque: 13 N·m (133 kgf·cm, 10 ft·lbf)

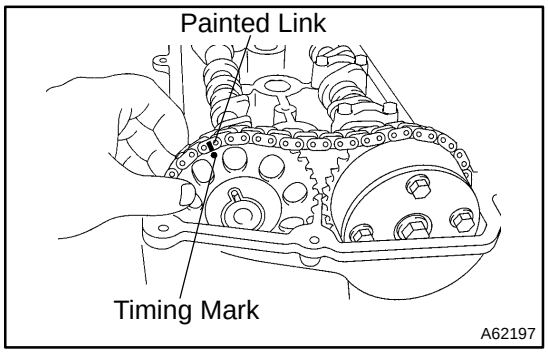

(c) Put the camshaft No.2 on the cylinder head with the painted links of the chain aligned with the timing mark on the camshaft timing gear.

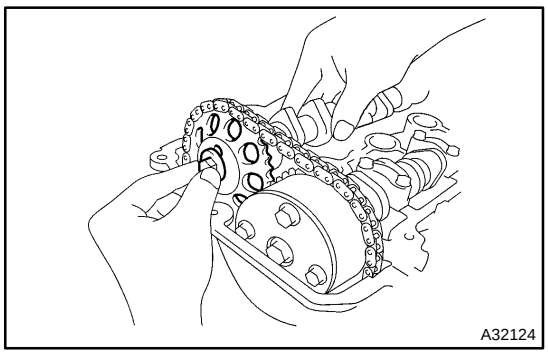

(d) Tighten the camshaft timing gear set bolt temporarily.

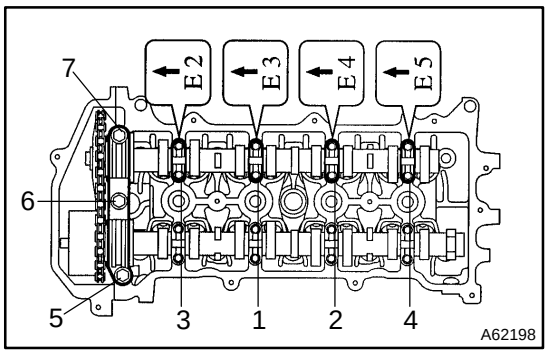

(e) Examine the front marks and numbers and tighten the bolts in the order shown in the illustration.
Torque: 13 N·m (133 kgf·cm, 10 ft·lbf)

(f) Install the bearing cap No. 1.
Torque: 23 N·m (235 kgf·cm, 17 ft·lbf)

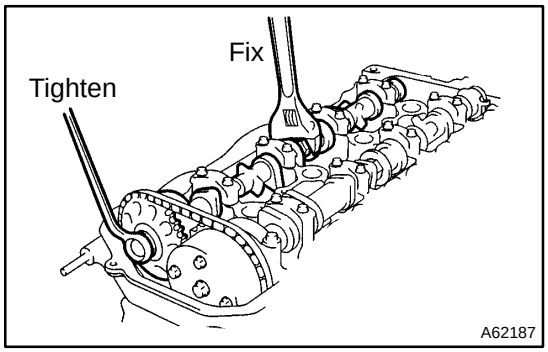

(g) Fix the camshaft with a wrench and so on, then tighten the camshaft timing gear set bolt.
Torque: 54 N·m (551 kgf·cm, 40 ft·lbf)

NOTICE:
Be careful not damage the valve lifter.

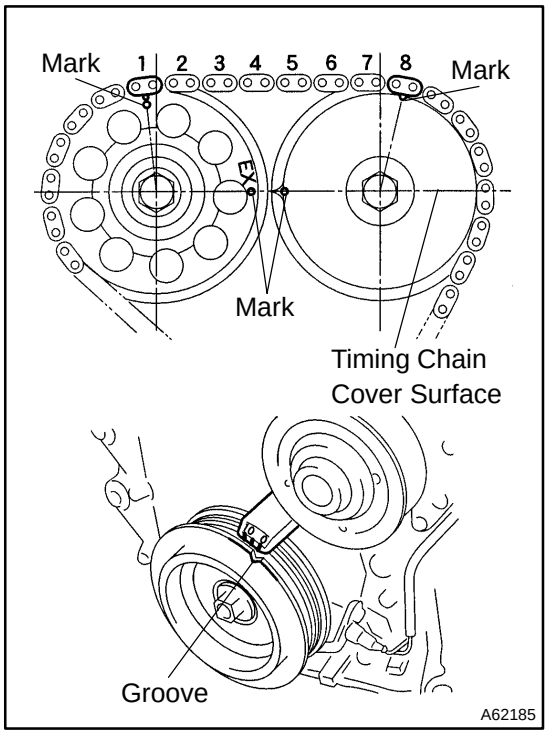

(h) Check the match marks on the timing chain and camshaft timing sprockets, and then the alignment of the pulley groove with timing mark of the chain cover as shown in the illustration.

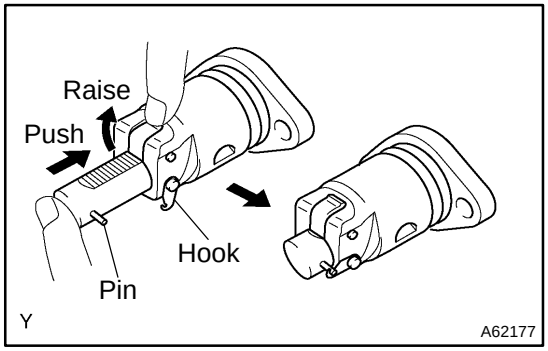

(i) Install chain tensioner.
(1) Check the O–ring is clean, and set the hook as shown in the illustration.

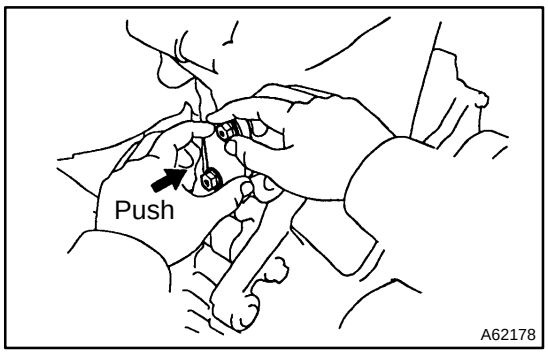

(2) Apply engine oil to the chain tensioner and install it with the 2 nuts.

Torque: 9.0 N·m (92 kgf·cm, 80 in·lbf)

NOTICE:

When installing the tensioner, set the hook again if the hook release the plunger.

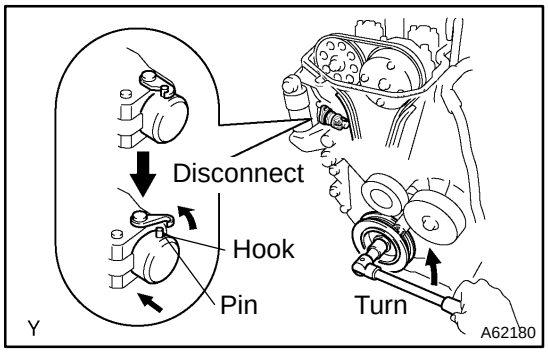

(3) Turn the crankshaft counterclockwise, and disconnect the plunger knock pin from the hook.

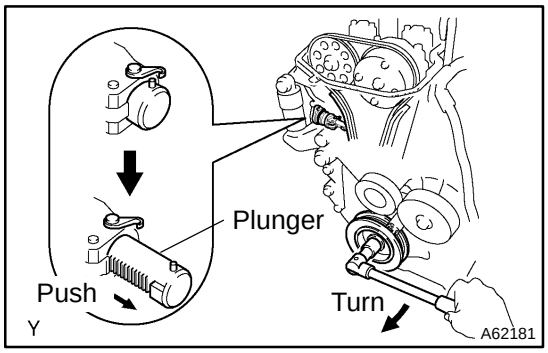

(4) Turn the crankshaft clockwise, and check that the slipper is pushed by the plunger.

HINT:

If the plunger does not spring out, press the slipper into the chain tensioner with a screwdriver so that the hook is released from the knock pin and the plunger springs out.

17. ADJUST VALVE CLEARANCE (See page 14–5)

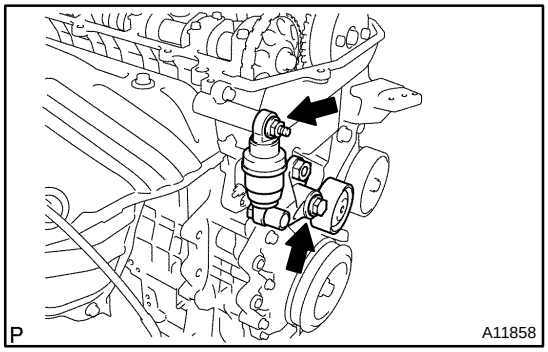

18. INSTALL V–RIBBED BELT TENSIONER ASSY

(a) Install the V–ribbed belt tensioner with the nut and bolt.

Torque:

Nut 29 N·m (296 kgf·cm, 21 ft·lbf)

Bolt 69 N·m (704 kgf·cm, 51 ft·lbf)

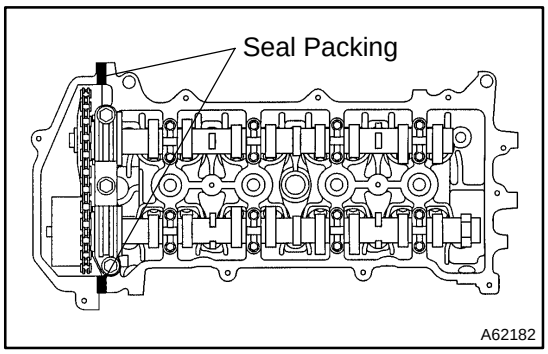

19. INSTALL CYLINDER HEAD COVER SUB–ASSY

(a) Remove any old packing (FIPG) material.

(b) Apply seal packing to 2 locations as shown in the illustration.

Seal packing: Part No. 08826–00080 or equivalent

NOTICE:

- **Remove any oil from the contact surface.**
- **Install the cylinder head cover within 3 minutes after applying seal packing.**
- **Do not put into engine oil 2 hours after installing.**

(c) Install the cylinder head cover and 3 cable brackets with the 9 bolts, 2 seal washers and 2 nuts. Uniformly tighten the bolts and nuts, in the several passes.

Torque:
A 11 N·m (112 kgf·cm, 8 ft·lbf)
B 9.0 N·m (92 kgf·cm, 80 in·lbf)

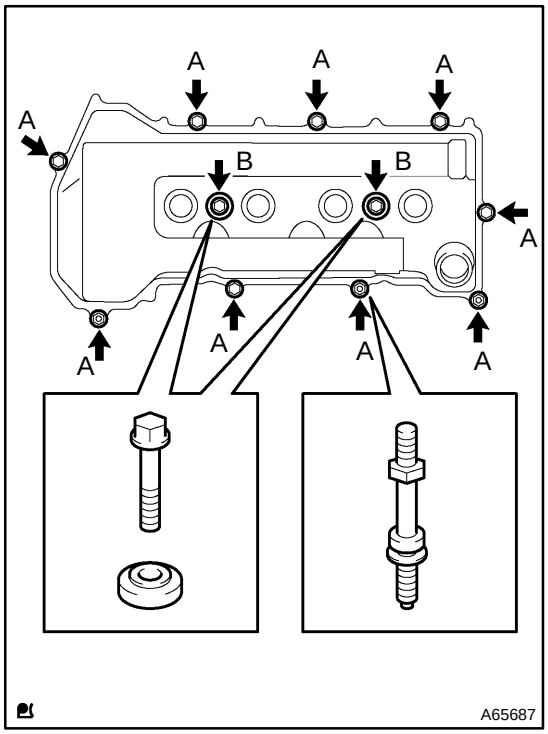

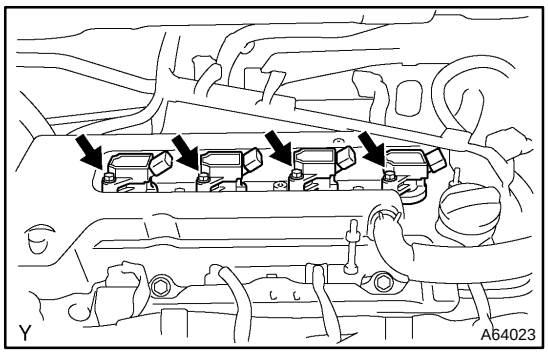

20. INSTALL IGNITION COIL ASSY

(a) Install the 4 ignition coils with the 4 bolts.

Torque: 9.0 N·m (92 kgf·cm, 80 in.·lbf)

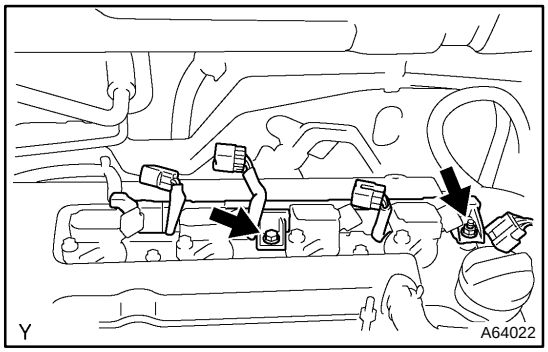

21. INSTALL ENGINE WIRE

(a) Install the engine wire with the bolt and nut.

Torque: 9.0 N·m (92 kgf·cm, 80 in.·lbf)

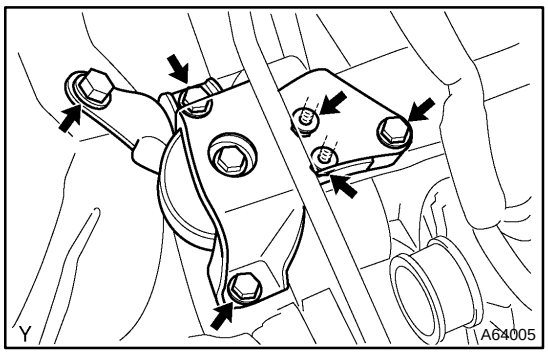

22. INSTALL ENGINE MOUNTING INSULATOR SUB–ASSY RH

(a) Install engine mounting insulator with the 4 bolts and 2 nuts.

Torque: 52 N·m (530 kgf·cm, 38 ft·lbf)

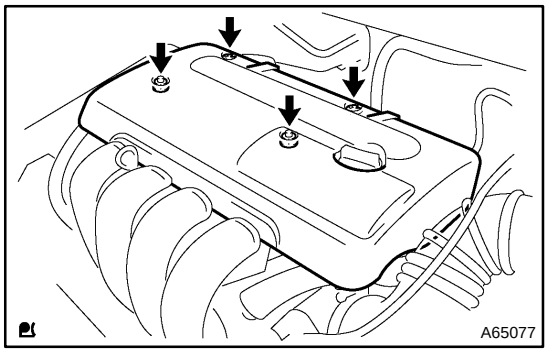

23. INSTALL CYLINDER HEAD COVER NO.2

(a) Install the cylinder head cover with the 2 nuts and 2 clips.

Torque: 7.0 N·m (71 kgf·cm, 62 in.·lbf)

24. CHECK ENGINE OIL LEAK

CAMSHAFT (2ZZ–GE)

COMPONENTS

140RC–01

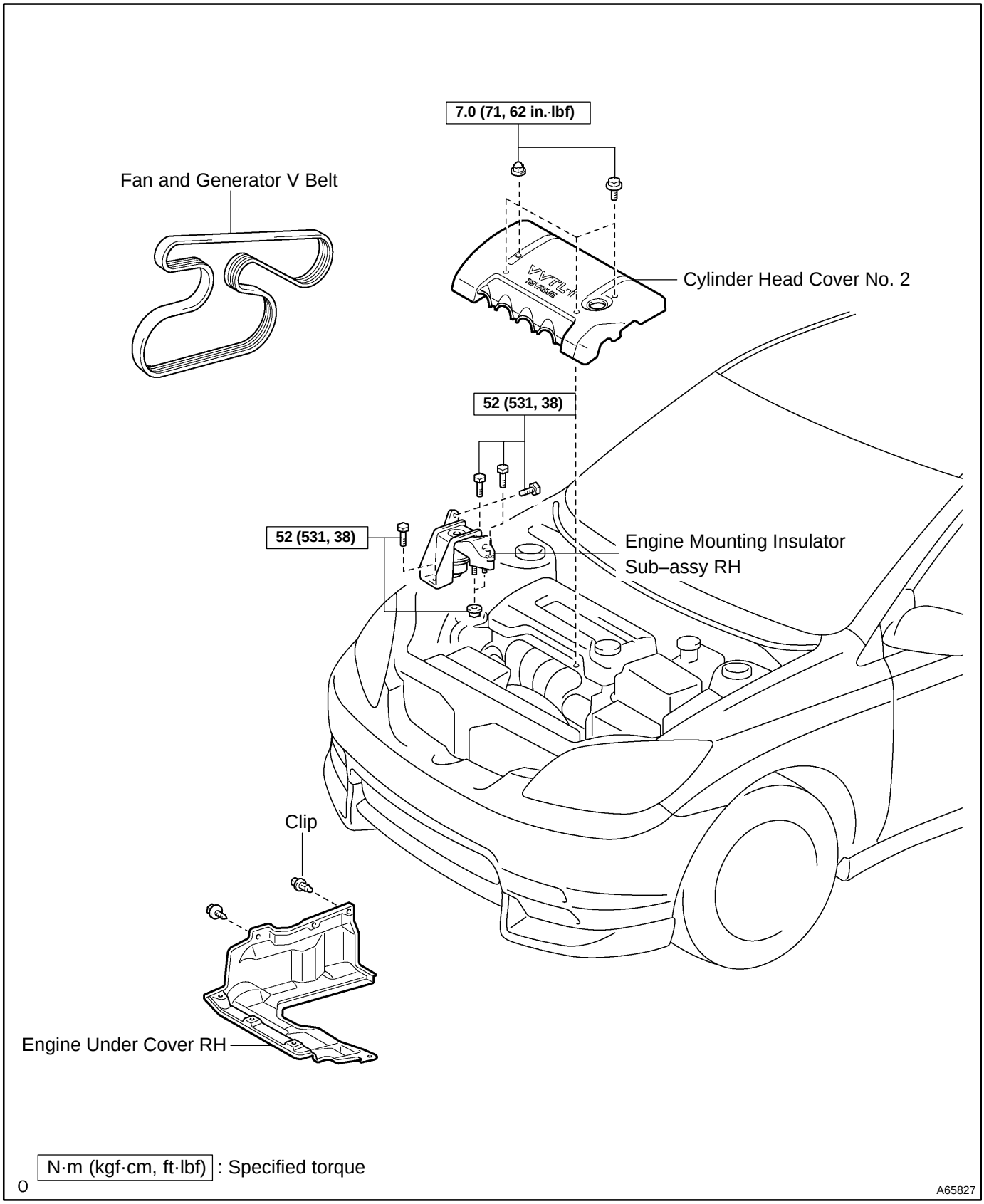

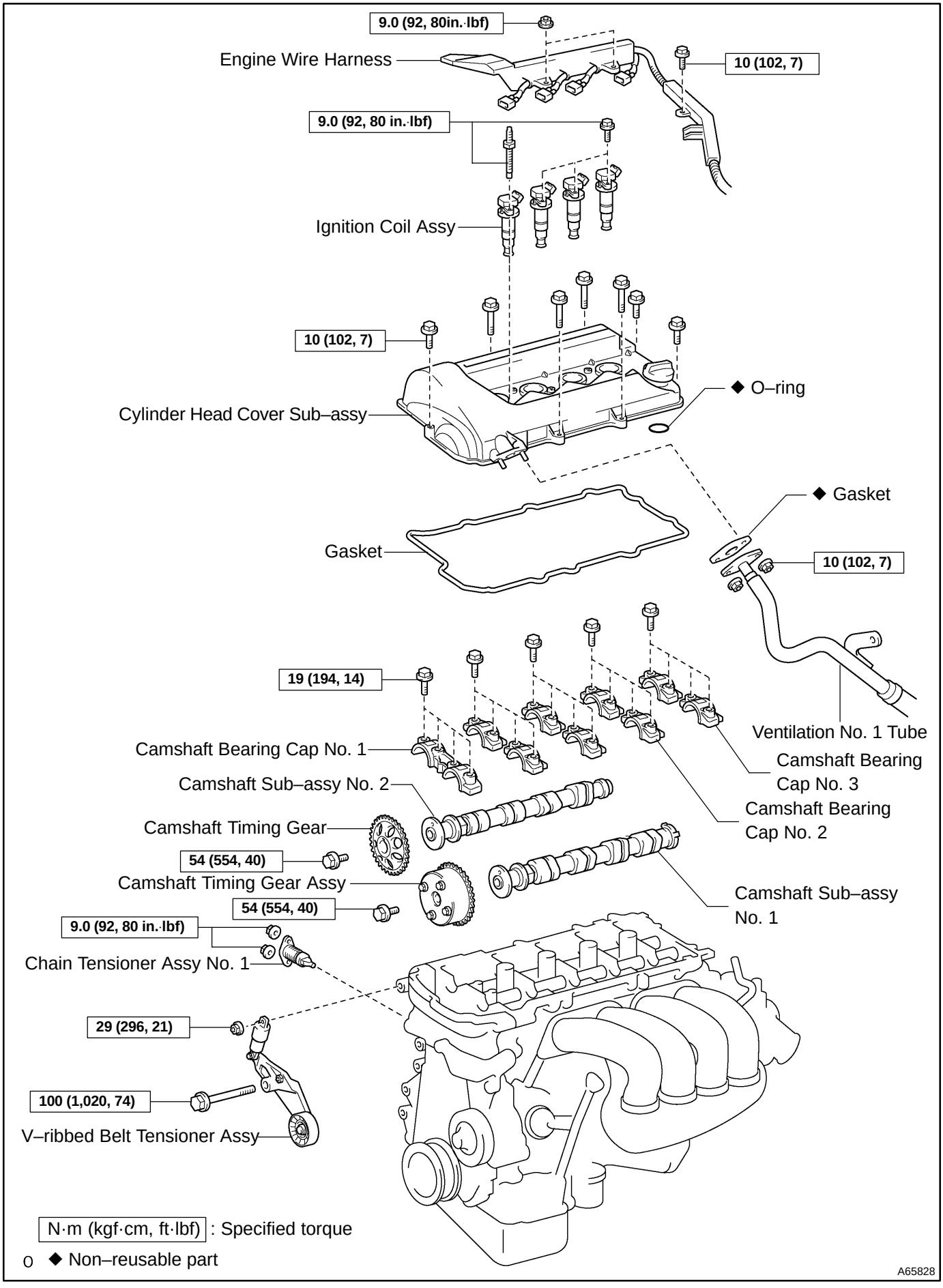
9.0 (92, 80in.·lbf)
Engine Wire Harness
10 (102, 7)
9.0 (92, 80 in.·lbf)
Ignition Coil Assy
10 (102, 7)
◆ O–ring
Cylinder Head Cover Sub–assy
◆ Gasket
Gasket
10 (102, 7)
19 (194, 14)
Ventilation No. 1 Tube
Camshaft Bearing Cap No. 1
Camshaft Bearing Cap No. 3
Camshaft Sub–assy No. 2
Camshaft Bearing Cap No. 2
Camshaft Timing Gear
54 (554, 40)
Camshaft Timing Gear Assy
Camshaft Sub–assy No. 1
54 (554, 40)
9.0 (92, 80 in.·lbf)
Chain Tensioner Assy No. 1
29 (296, 21)
100 (1,020, 74)
V–ribbed Belt Tensioner Assy
N·m (kgf·cm, ft·lbf) : Specified torque
◆ Non–reusable part
A65828

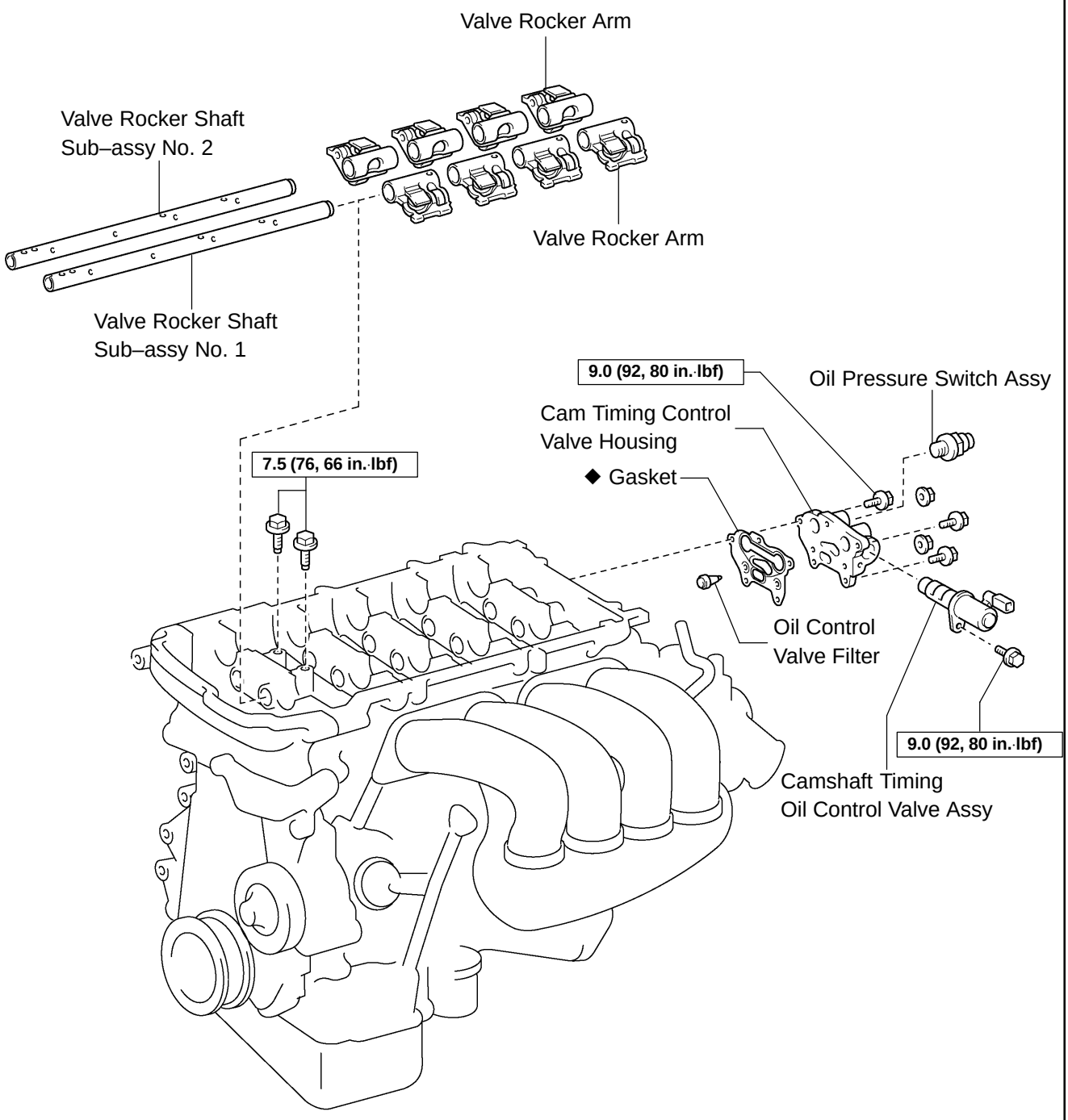

N·m (kgf·cm, ft·lbf) : Specified torque

◆ Non–reusable part

A65829

140RD–01

REPLACEMENT

1. REMOVE ENGINE UNDER COVER RH

2. REMOVE CYLINDER HEAD COVER NO.2

(a) Remove the 3 bolts, the nut and the cylinder head cover No. 2.

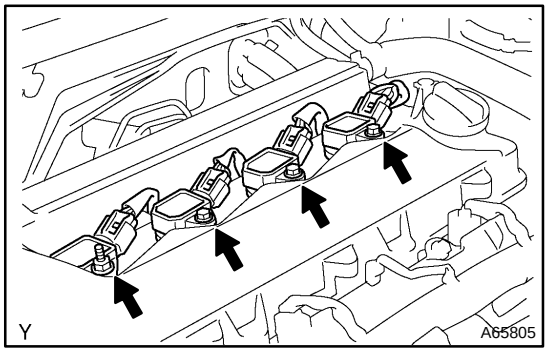

3. REMOVE IGNITION COIL ASSY

(a) Remove the 4 bolts, and disconnect the 4 connectors, and remove the 4 ignition coils.

4. REMOVE CYLINDER HEAD COVER SUB–ASSY

(a) Disconnect the fuel hose clamp and 2 PCV hoses from the cylinder head cover.

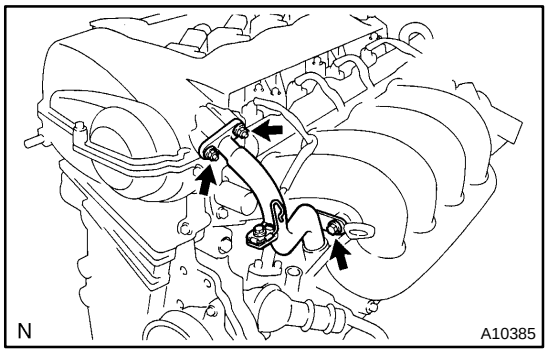

(b) Remove the 2 nuts, bolt and disconnect the No. 3 ventilation hose from the No. 1 ventilation pipe.

(c) Disconnect the ventilation No. 1 tube and gasket.

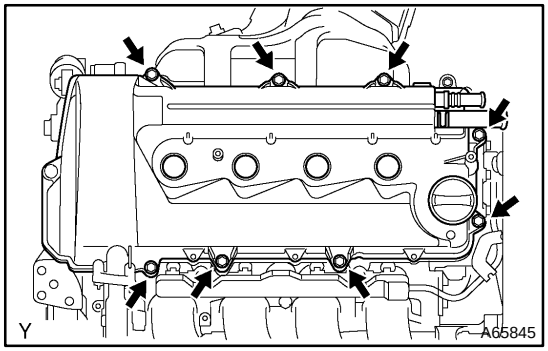

(d) Remove the 8 bolts, wire harness protector, cylinder head cover and gasket.

(e) Remove the O–ring from the cylinder head cover.

5. REMOVE WIRE HARNESS CLAMP

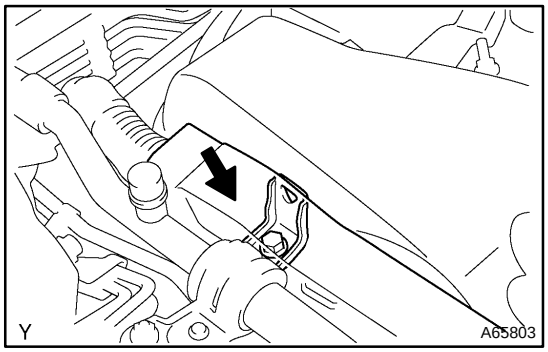

(a) Disconnect engine wire harness.

(b) Remove the bolt and wiring harness clamp bracket.

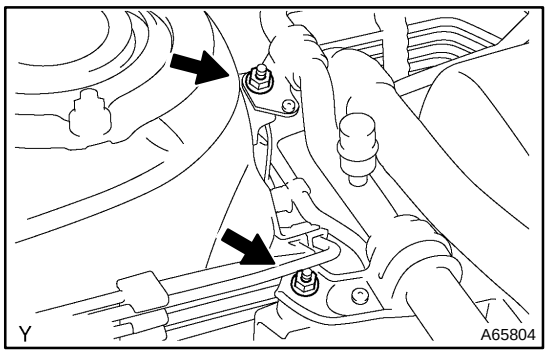

6. DISCONNECT SUCTION HOSE SUB–ASSY

(a) Remove the 2 nuts installing the suction hose sub–assy.

(b) Disconnect the suction hose sub–assy.

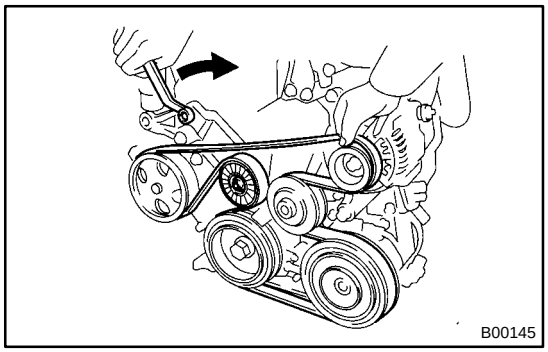

7. REMOVE FAN AND GENERATOR V BELT

(a) Turn the drive belt tensioner slowly clockwise and loosen it. Then, remove the drive belt and put back the drive belt tensioner little by little and fix it quietly.

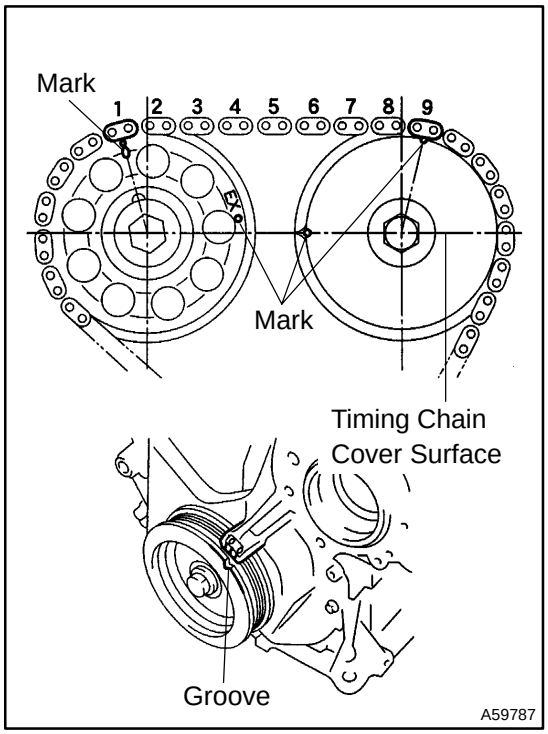

8. SET NO.1 CYLINDER TO TDC/COMPRESSION

(a) Turn the crankshaft pulley, and align its groove with timing mark ”0” of the timing chain cover.

(b) Check that the point marks of the camshaft timing sprocket and VVT timing sprocket are in straight line on the timing chain cover surface as shown in the illustration.

HINT:

If not, turn the crankshaft 1 revolution (360°) and align the marks as above.

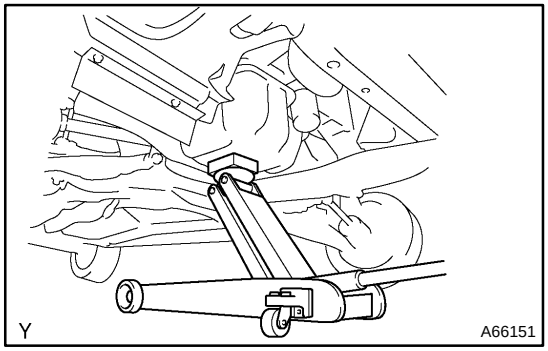

9. REMOVE ENGINE MOUNTING INSULATOR SUB–ASSY RH

(a) Set the jack to the engine.

HINT:

Place a wooden block between the jack and engine.

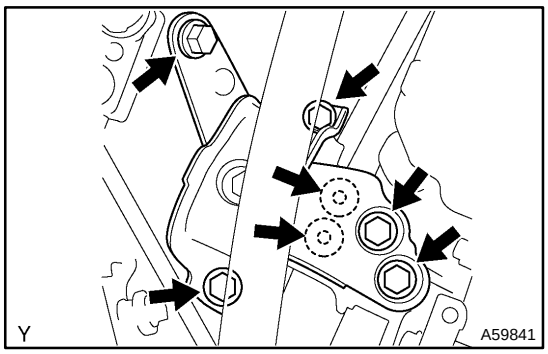

(b) Remove the 5 bolts, 2 nuts and engine mounting insulator sub–assy RH.

10. REMOVE V–RIBBED BELT TENSIONER ASSY

HINT:

Handle a jack up and down to remove the bolt.

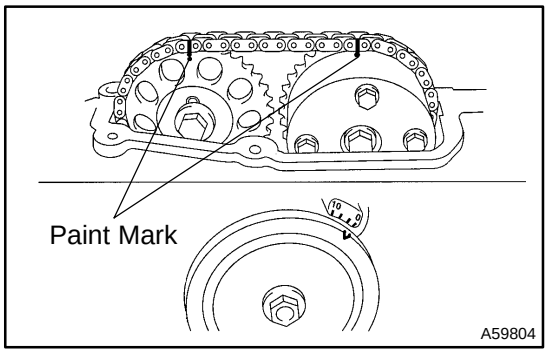

11. REMOVE CAMSHAFT

NOTICE:

Be sure not to revolve the crankshaft without the chain tensioner.

(a) Set the No. 1 cylinder to the TDC/compression.

(b) Place match marks on the timing chain and camshaft timing sprockets.

(c) Remove the 2 nuts and the chain tensioner.

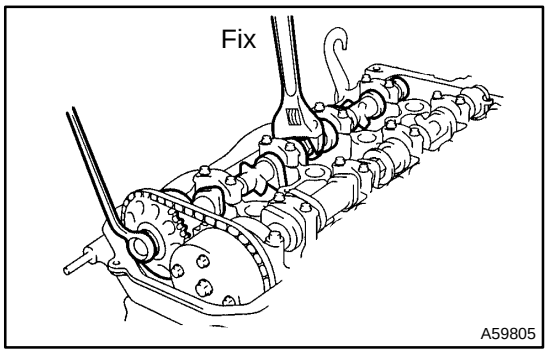

(d) Fix the camshaft with a wrench and so on, then loosen the camshaft timing gear set bolt.

NOTICE:

Be careful not to damage the valve lifter.

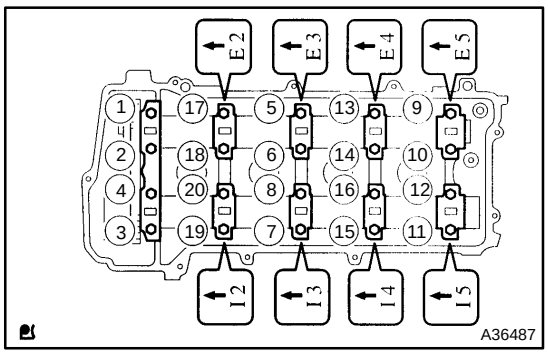

(e) Loosen the camshaft bearing cap bolts on No. 2 camshaft in the order as shown in the illustration in several passes,and remove the caps.

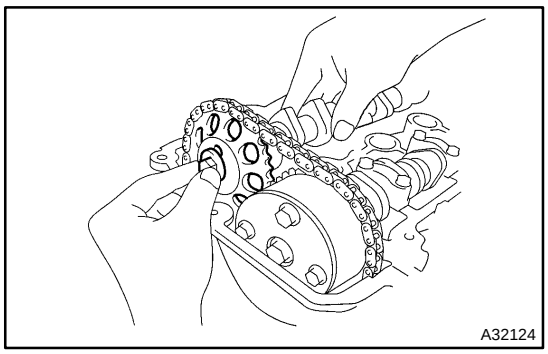

(f) Remove the camshaft timing gear as shown in the illustration.

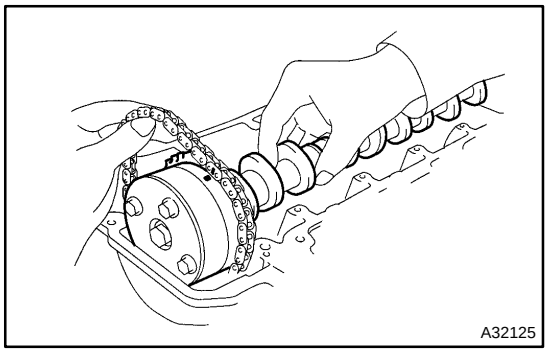

(g) Remove the camshaft with holding the timing chain.

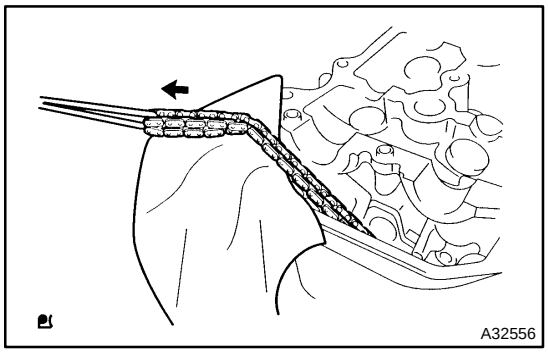

(h) Tie the timing chain with a string as shown in the illustration.

NOTICE:

Be careful not to drop anything inside the timing chain cover.

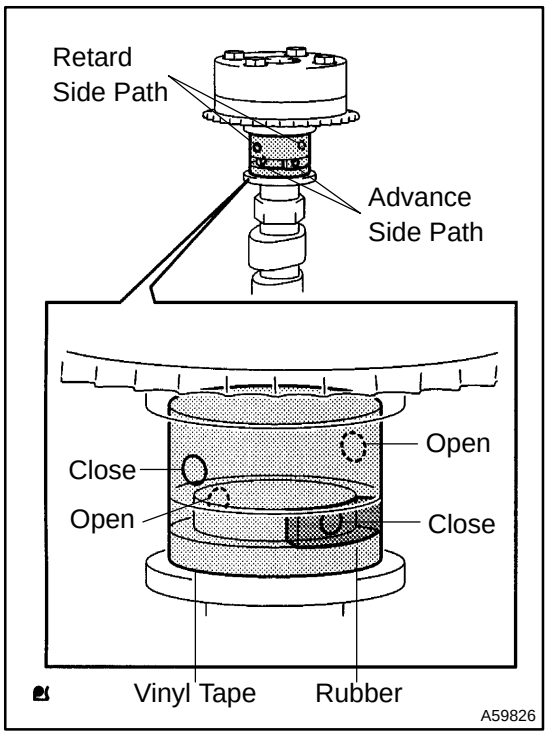

12. INSPECT CAMSHAFT TIMING GEAR ASSY

(a) Check the lock of camshaft timing gear.

(1) Grip the camshaft with a vice, and confirm the camshaft timing gear is locked.

NOTICE:

Be careful not to damage the camshaft.

(b) Release lock pin.

(1) Cover 4 oil paths of cam journal with vinyl tape as shown in the illustration.

HINT:

Two advance side paths are provided in the groove of the camshaft. Plug one of the path with a rubber piece.

(2) Break through the tapes of the advance side path and the retard side path on the opposite side of the groove.

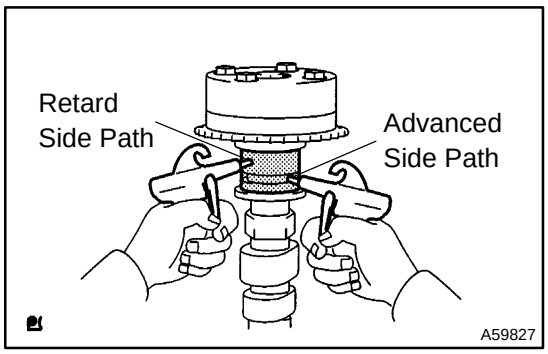

(3) Put air pressure into two broken paths (the advance side path and the retard side path) with about 150 kPa {1.5 kgf/cm^2}.

CAUTION:
Cover the paths with shop rag to avoid oil splashing.

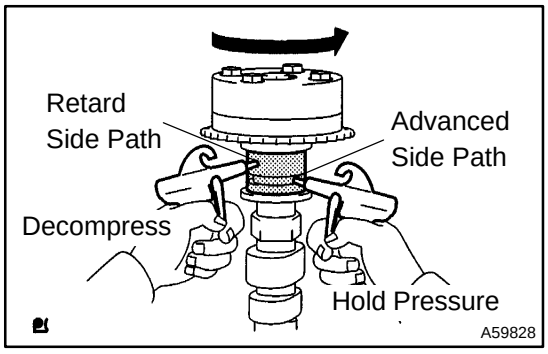

(4) Confirm if the camshaft timing gear assembly revolves in the timing advance direction when weakening the air pressure of the timing retard path.

HINT:
The lock pin is released, and camshaft timing gear, revolves in the advance direction.

(5) When the camshaft timing gear comes to the most advanced position, take out the air pressure of the timing retard side path, and then, take out that of timing advance side path.

CAUTION:
Camshaft timing assembly gear occasionally shifts to the retard side abruptly, if the air compression of the advanced side path is released before retard side path. It often causes the breakage of the lock pin.

(c) Check smooth revolution

(1) Revolve the camshaft timing gear assembly within the movable range except for the most retarded position several times, and check the smooth revolution.

CAUTION:
Be sure to perform this check by hand, instead of air pressure.

(d) Check the lock in the most retarded position.

(1) Confirm that the camshaft timing gear assembly is locked at the most retarded position.

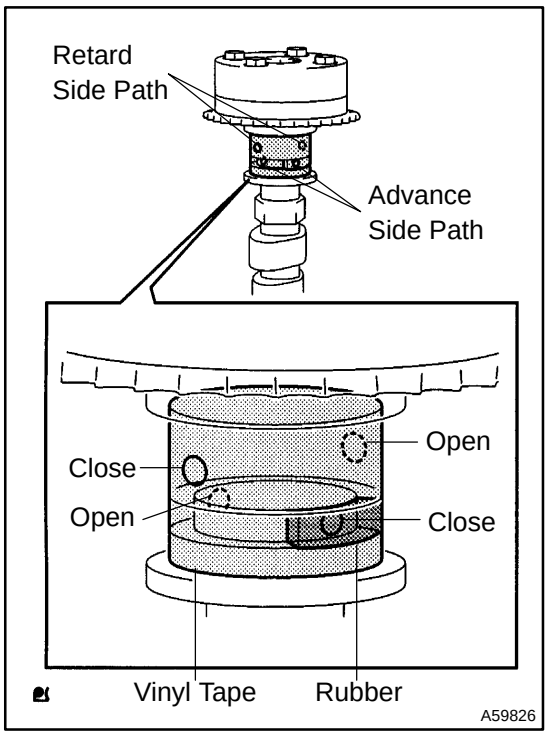

13. REMOVE CAMSHAFT TIMING GEAR ASSY

(a) Grip the camshaft with a vice, and confirm that the gear is locked.

CAUTION:

Be careful not to damage the camshaft.

(b) Cover 4 oil paths of cam journal with vinyl tape as shown in the illustration.

HINT:

Two advance side paths are provided in the groove of the camshaft. Plug one of the path with a rubber piece.

(c) Break through the tapes of the advance side path and the retard side path on the opposite side of the groove.

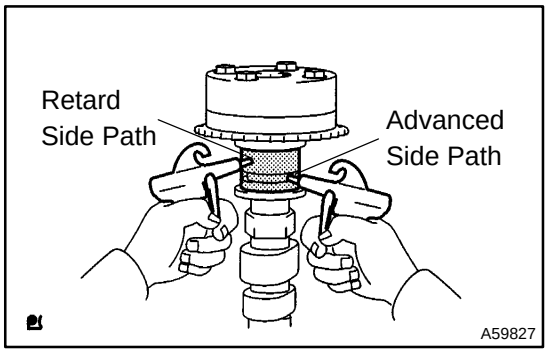

(d) Put air pressure into two broken paths (the advance side path and the retard side path) with about 150 kPa {1.5 kgf/cm^2}.

CAUTION:

Cover the paths with shop rag to avoid oil splashing.

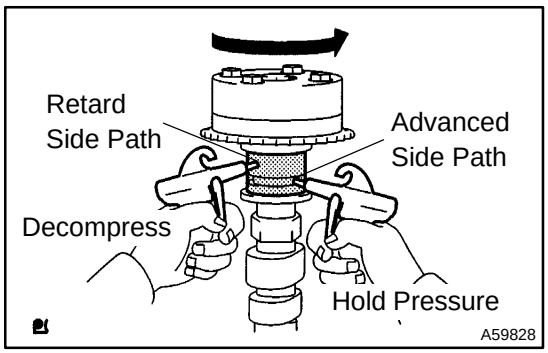

(e) Confirm if the camshaft timing gear assembly revolves in the timing advance direction when weakening the air pressure of the timing retard path.

HINT:

The lock pin is released, and camshaft timing gear revolves in the advance direction.

(f) When the camshaft timing gear comes to the most advanced position, take out the air pressure of the timing retard side path, and then, takeout that of timing advance side path.

CAUTION:

Camshaft timing gear assembly occasionally shifts to the retard side abruptly, if the air compression of the advanced side path is released before retard side paths. It often causes the breakage of the lock pin.

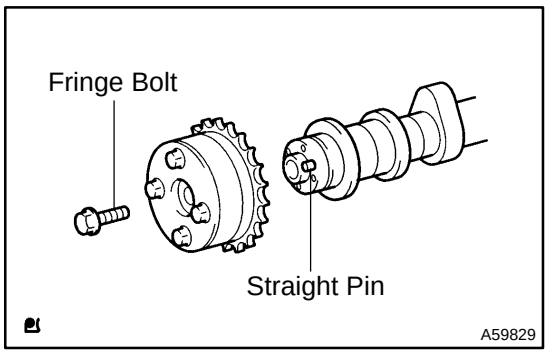

(g) Remove the fringe bolt of camshaft timing gear assembly.

NOTICE:

Be sure not to remove the other 4 bolts.

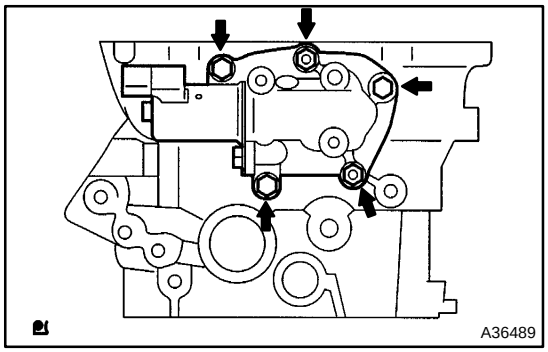

14. REMOVE CAM TIMING CONTROL VALVE HOUSING

(a) Remove the 3 bolts, 2 nuts and cam timing oil control valve housing.

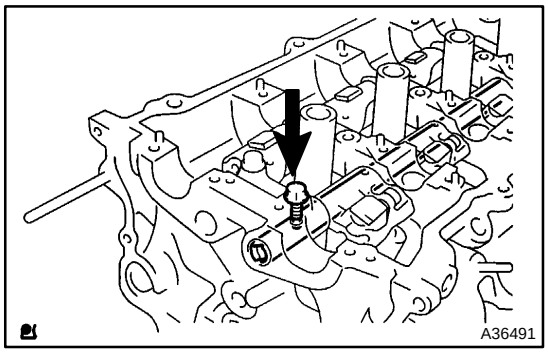

15. REMOVE VALVE ROCKER SHAFT SUB–ASSY NO.1

(a) Remove the bolt and the rocker shaft No.1.

(b) Remove the valve rocker arm.

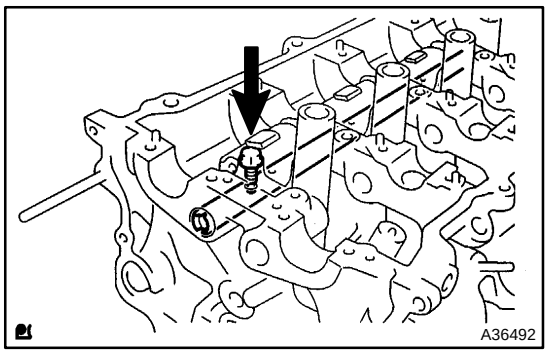

16. REMOVE VALVE ROCKER SHAFT SUB–ASSY NO.2

(a) Remove the bolt and the rocker shaft No.2

(b) Remove the valve rocker arm.

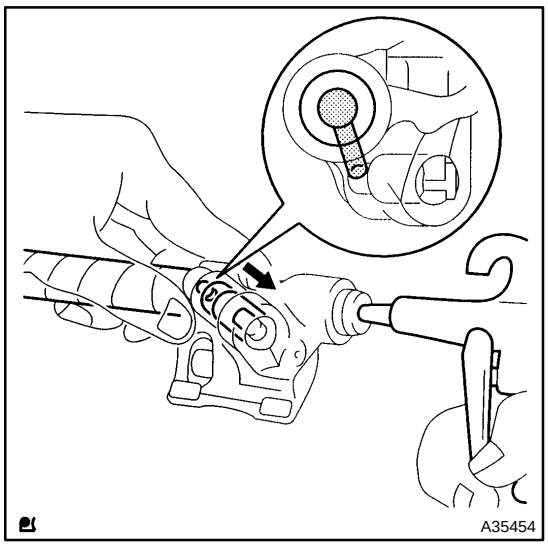

17. INSPECT VALVE ROCKER ARM

(a) Cover oil paths of the rocker arm shaft except 2 paths with vinyl type.

(b) Align the oil path of the rocker arm shaft to the oil path of the rocker arm.

(c) Check that the piston inside of the rocker arm moves when air pressure 150 kpa {1.5kgf/cm^2 } is put to the oil paths.

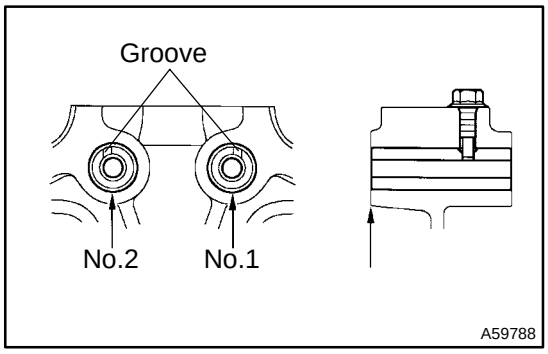

18. INSTALL VALVE ROCKER SHAFT SUB–ASSY NO.2

(a) Put the valve rocker shaft through the cylinder head and the hole of the valve rocker arm, and check the direction of the groove.

(b) Install a bolt to fix the rocker shaft No.2.
Torque: 7.5 N·m (76 kgf·cm, 66 in·lbf)

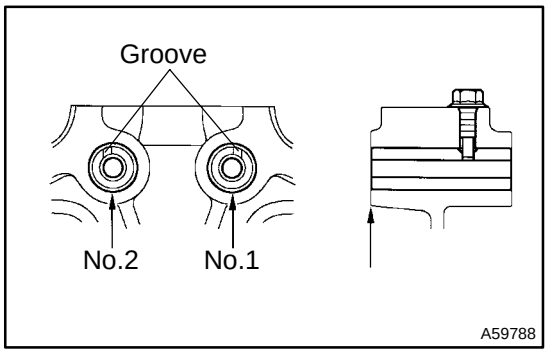

19. INSTALL VALVE ROCKER SHAFT SUB–ASSY NO.1

(a) Put the valve rocker shaft through the cylinder head and the hole of the valve rocker arm, and check the direction of the groove.

(b) Install a bolt to fix the rocker shaft No.1.
Torque: 7.5 N·m (76 kgf·cm, 66 in·lbf)

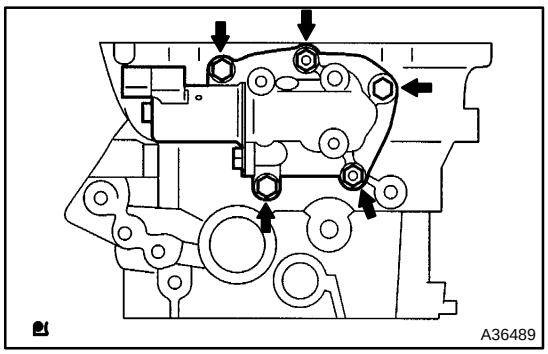

20. INSTALL CAM TIMING CONTROL VALVE HOUSING

(a) Install the new gasket and the oil control valve housing with the 3 bolts and 2 nuts.
Torque: 9.0 N·m (92 kgf·cm, 80 in.·lbf)

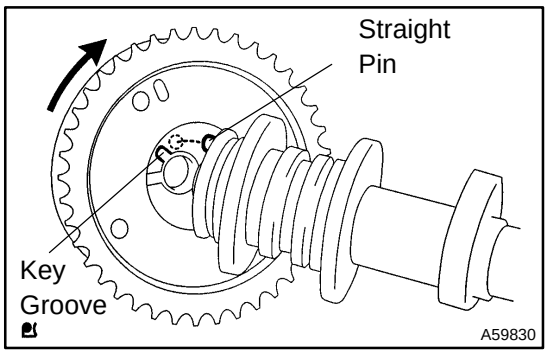

21. INSTALL CAMSHAFT TIMING GEAR ASSY

(a) Put the camshaft timing gear assembly and the camshaft together with the straight pin off the key groove.

(b) Turn the camshaft timing gear assembly to the left direction (as shown in the illustration) with pushing it lightly against the camshaft. Push further at the position where the pin gets into the groove.

CAUTION:

Be sure not to turn the camshaft timing gear to the retard angle side (to the right angle).

(c) Check that there is no clearance between the gear's fringe and the camshaft.

(d) Tighten the fringe bolt with the camshaft timing gear fixed.
Torque: 54 N·m (551 kgf·cm, 40 ft·lbf)

(e) Check that the camshaft timing gear assembly can move to the retard angle side (the right angle), and is locked at the most retarded position.

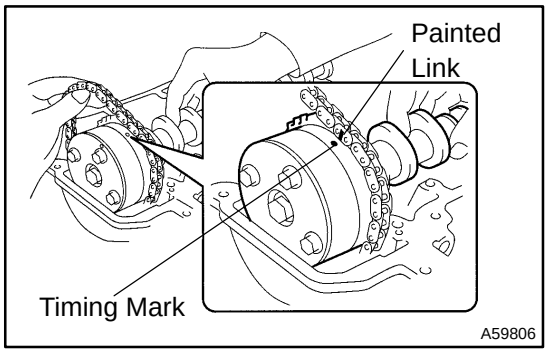

22. INSTALL CAMSHAFT

(a) As shown in the illustration, install the timing chain on the camshaft timing gear, with the painted links aligned with the timing marks on the camshaft timing sprockets.

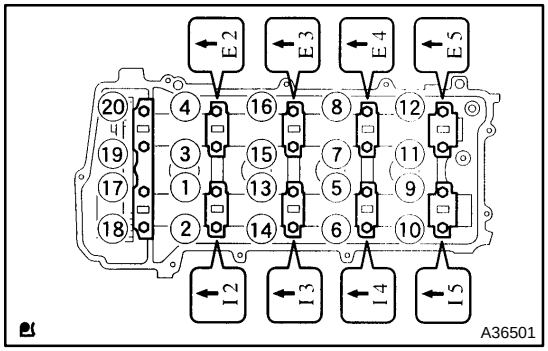

(b) Examine the front marks and numbers and tighten the bolts in the order shown in the illustration.
Torque: 19 N·m (194 kgf·cm, 14 ft·lbf)

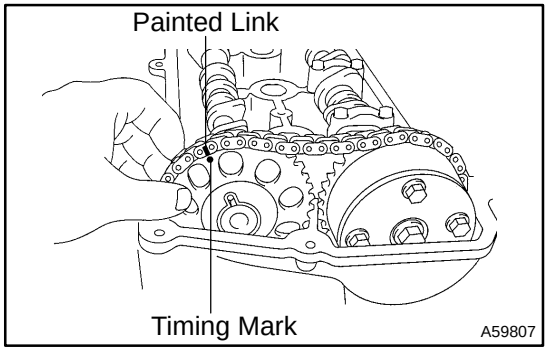

(c) Put the camshaft No.2 on the cylinder head with the painted links of the chain aligned with the timing mark on the camshaft timing sprockets.

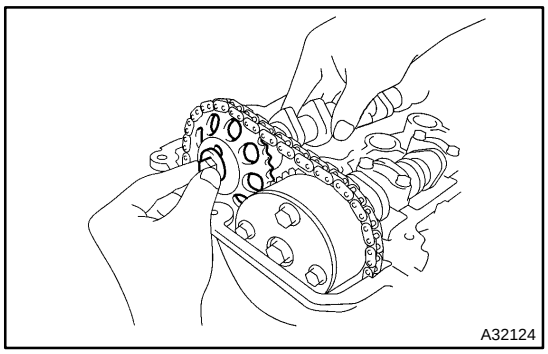

(d) Tighten the set bolt temporarily.

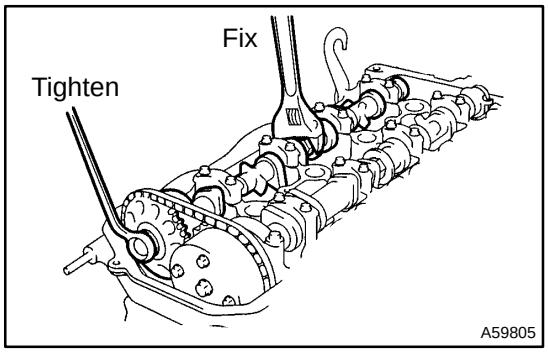

(e) Fix the camshaft with a wrench and so on, then tighten the camshaft timing gear set bolt.
Torque: 54 N·m (551 kgf·cm, 40 ft·lbf)

NOTICE:
Be careful not damage the valve lifter.

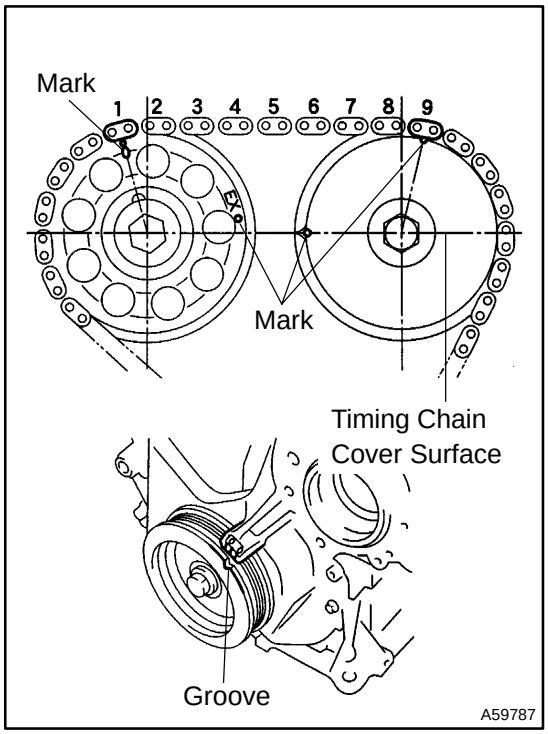

(f) Check the match marks on the timing chain and camshaft timing sprockets, and then the alignment of the pulley groove with timing mark of the chain cover as shown in the illustration.

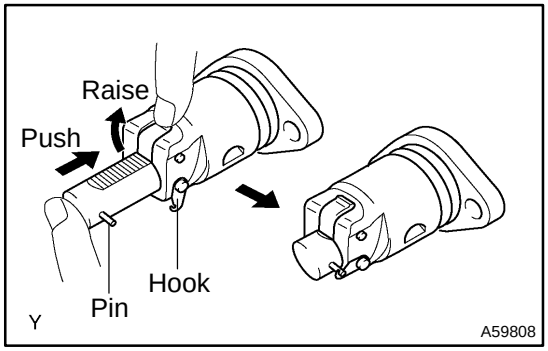

(g) Install chain tensioner.
(1) Check the O–ring is clean, and set the hook as shown in the illustration.

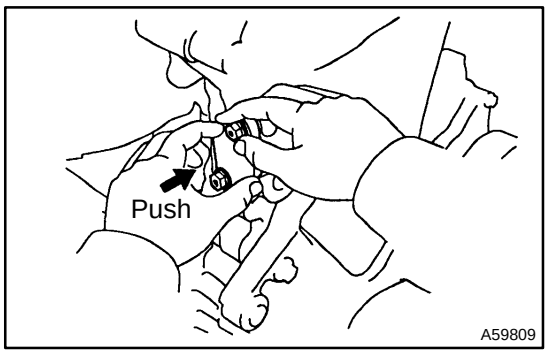

(2) Apply engine oil to the chain tensioner and install it.
Torque: 9.0 N·m (92 kgf·cm, 80 in·lbf)

NOTICE:
When installing the tensioner, set the hook again if the hook release the plunger.

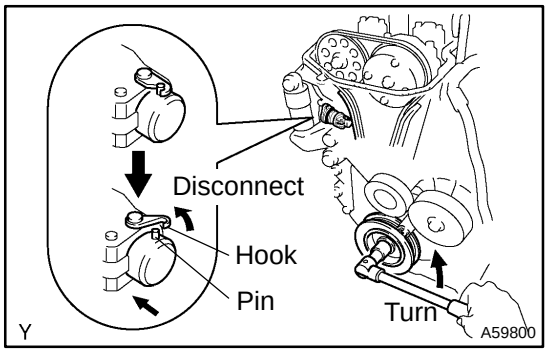

(3) Turn the crankshaft counterclockwise, and disconnect the plunger knock pin from the hook.

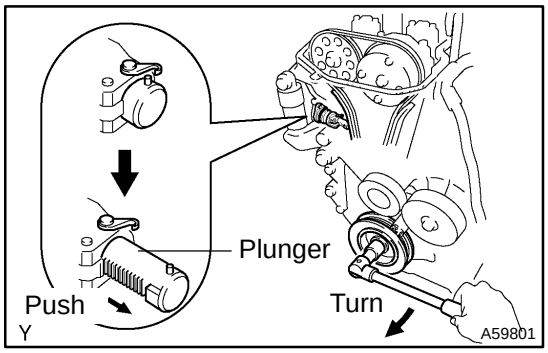

(4) Turn the crankshaft clockwise, and check that the slipper is pushed by the plunger.

23. INSTALL V–RIBBED BELT TENSIONER ASSY
Torque:
Nut: 29 N·m (296 kgf·cm, 21 ft·lbf)
Bolt: 100 N·m (1,020 kgf·cm, 74 ft·lbf)

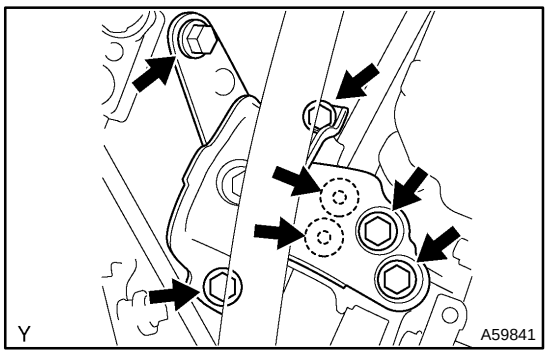

24. INSTALL ENGINE MOUNTING INSULATOR SUB–ASSY RH

(a) Install the engine mounting insulator sub–assy RH with the 5 bolts and the 2 nuts.
Torque: 52 N·m (530 kgf·cm, 38 ft·lbf)

25. INSTALL CYLINDER HEAD COVER SUB–ASSY

(a) Remove any old packing (FIPG) material.

HINT:

When FIPG on the head cover gasket side cannot be eliminated completely, replace the gasket.

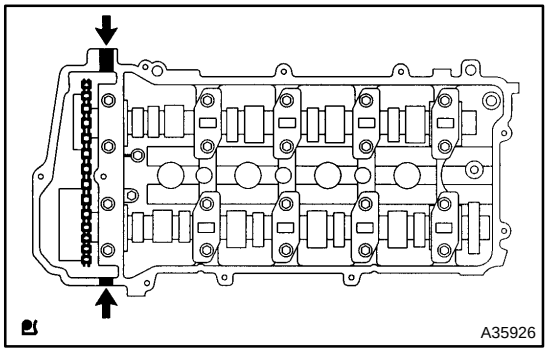

(b) Apply seal packing to 2 locations as shown in the illustration.

Seal packing:

Part No. 08826–00080 or equivalent

(c) Install the cylinder head cover gasket to the cylinder head cover.

HINT:

Part must be assembled within 3 minutes of application. Otherwise the material must be remove and reapplied.

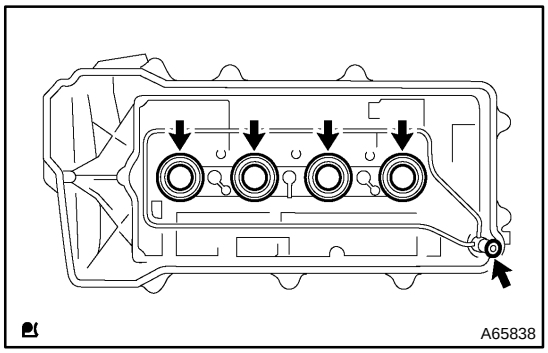

(d) Install the spark plug tube gasket and a new O–ring to the cylinder head cover.

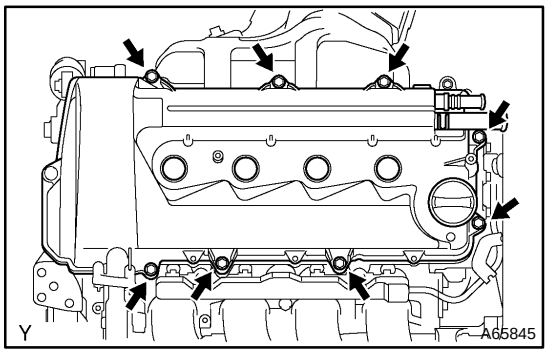

(e) Install the cylinder head cover and wire harness protector with the 8 bolts. Uniformly tighten the bolts, in the several passes, in the sequence shown.

Torque: 10 N·m (102 kgf·cm, 7 ft·lbf)

(f) Connect the 2 PCV hoses to the cylinder head cover.

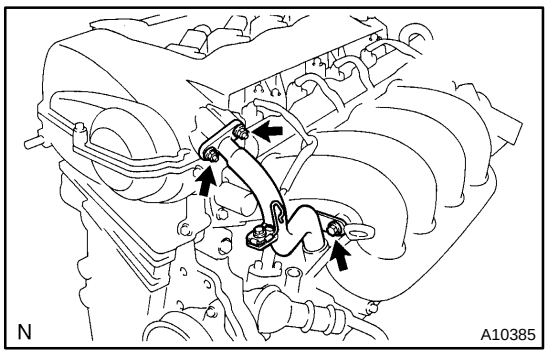

(g) Install a new gasket and No. 1 ventilation pipe with 2 nuts and bolt.

Torque:

Nut 10 N·m (102 kgf·cm, 7 ft·lbf)

Bolt 24 N·m (245 kgf·cm, 18 ft·lbf)

(h) Connect the No. 3 ventilation hose to the No. 1 ventilation pipe.

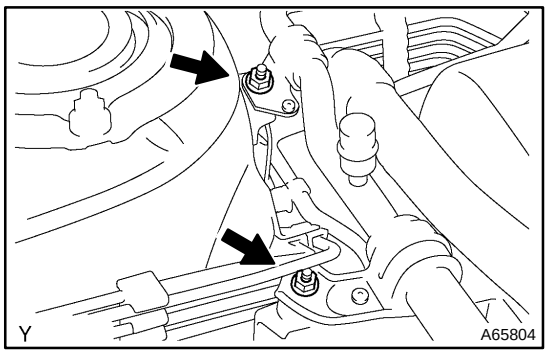

26. INSTALL SUCTION HOSE SUB–ASSY
Torque: 9.8 N·m (100 kgf·cm, 87 in.·lbf)

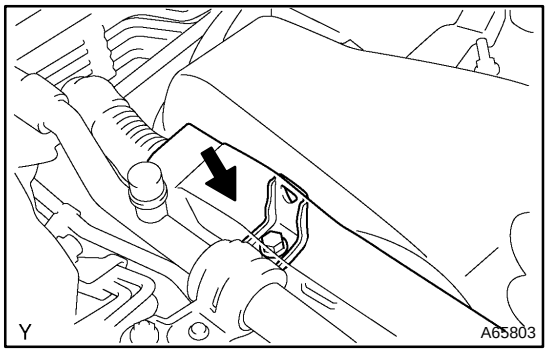

27. INSTALL WIRE HARNESS CLAMP
Torque: 10 N·m (102 kgf·cm, 7 ft·lbf)

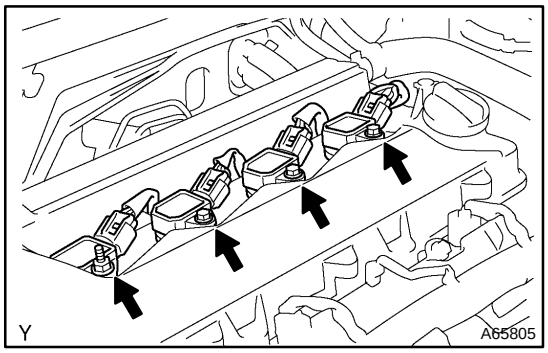

28. INSTALL IGNITION COIL ASSY
Torque: 9.0 N·m (92 kgf·cm, 80 in.·lbf)

29. INSTALL CYLINDER HEAD COVER NO.2
Torque: 7.0 N·m (71 kgf·cm, 62 in.·lbf)

30. CHECK ENGINE OIL LEAK

TIMING GEAR COVER OIL SEAL (1ZZ–FE)

140OM–02

REPLACEMENT

1. REMOVE ENGINE UNDER COVER RH

2. REMOVE FRONT WHEEL RH

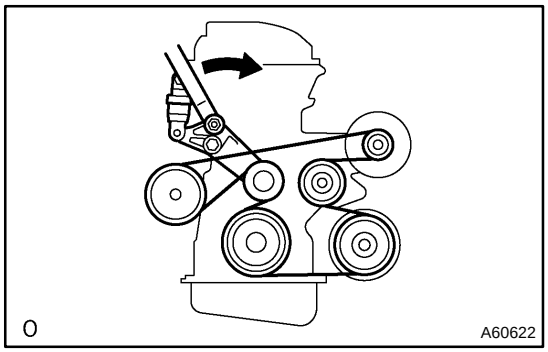

3. REMOVE FAN AND GENERATOR V BELT

(a) Turn the V–ribbed belt tensioner slowly clockwise and loosen it. Then, remove the fan and generator V belt and put back the V–ribbed belt tensioner little by little and fix it quietly.

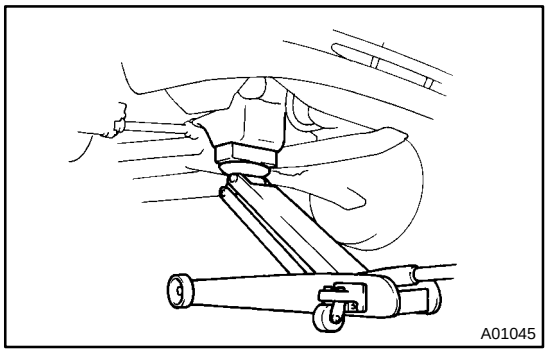

4. REMOVE ENGINE MOUNTING INSULATOR SUB–ASSY RH

(a) Remove the the PS oil pump reservoir and put it aside.

(b) Place a wooden block between the jack and engine, and set the jack. Then, remove the 4 bolts, the 2 nuts and engine mounting insulator RH.

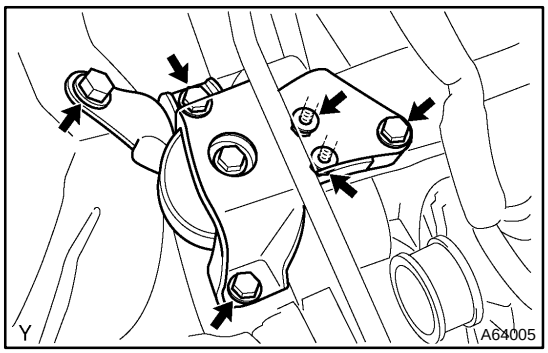

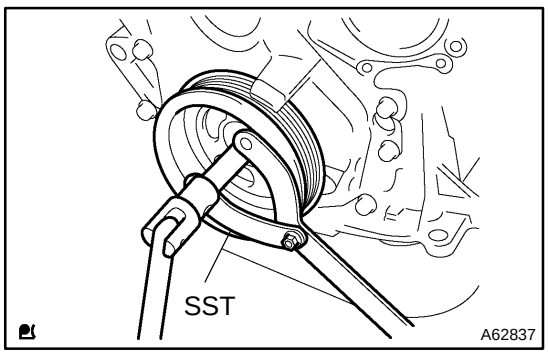

5. REMOVE CRANKSHAFT PULLEY

(a) Using SST, remove the crankshaft pulley bolt.
SST 09960–10010 (09962–01000, 09963–01000)

(b) Remove the crankshaft pulley from the crankshaft.

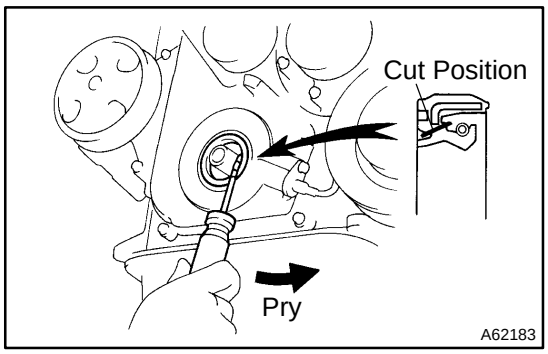

6. REMOVE TIMING GEAR COVER OIL SEAL

(a) Using a knife, cut off the oil seal lip.

(b) Using a screwdriver with taping its tip, pry out the oil seal.

NOTICE:

After the removal, check if the crankshaft is not damaged. If there is, mend it with a sandpaper (#400).

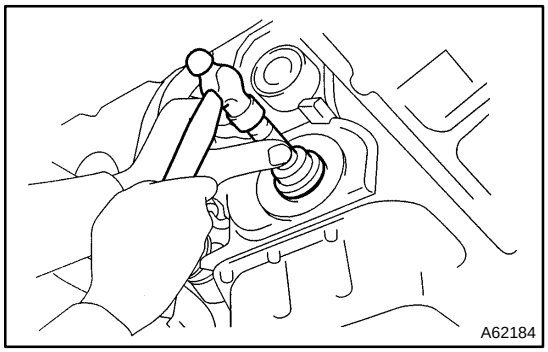

7. INSTALL TIMING GEAR COVER OIL SEAL

(a) Apply MP grease to a new oil seal lip.

NOTICE:

Keep the lip off foreign materials.

(b) Using SST, tap in the oil seal until its surface is flush with the timing chain cover edge.

SST 09223–22010

NOTICE:

Wipe off extra grease on the crankshaft.

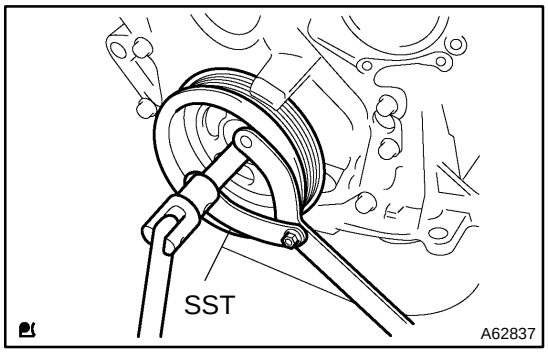

8. INSTALL CRANKSHAFT PULLEY

(a) Align the pulley set key with the key groove of the pulley, and slide on the pulley.

(b) Using SST, install the crankshaft pulley bolt.

SST 09960–10010 (09962–01000, 09963–01000)

Torque: 138 N·m (1,407 kgf·cm, 102 ft·lbf)

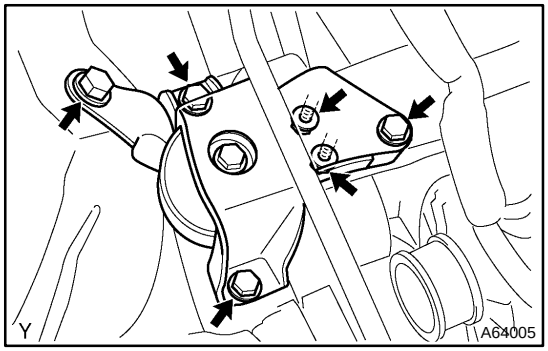

9. INSTALL ENGINE MOUNTING INSULATOR SUB–ASSY RH

(a) Install the engine mounting insulator RH with the 4 bolts and 2 nuts.

Torque: 52 N·m (530 kgf·cm, 38 ft·lbf)

10. INSTALL FRONT WHEEL RH

Torque: 103 N·m (1,050 kgf·cm, 76 ft·lbf)

11. CHECK ENGINE OIL LEAK

TIMING GEAR COVER OIL SEAL (2ZZ–GE)

140RG–01

REPLACEMENT

1. REMOVE ENGINE UNDER COVER RH

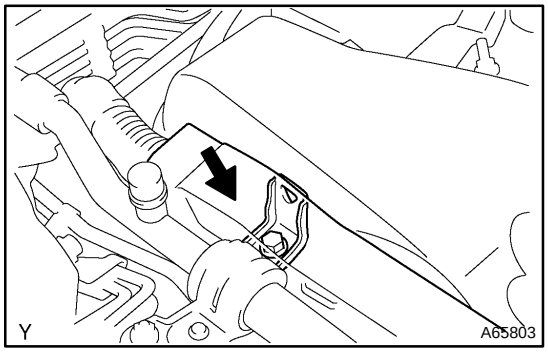

2. REMOVE WIRE HARNESS CLAMP

(a) Disconnect the engine wire harness.
(b) Remove the bolt and wiring harness clamp bracket.

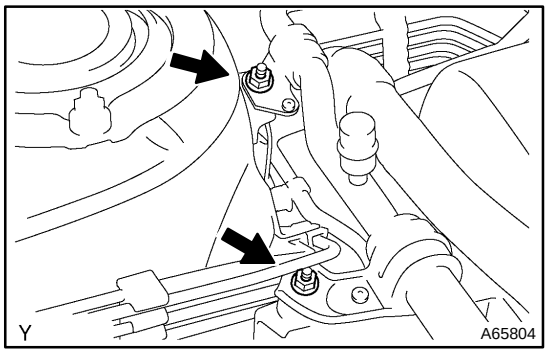

3. DISCONNECT SUCTION HOSE SUB–ASSY

(a) Remove the 2 nuts installing the suction hose sub–assy.
(b) Disconnect the suction hose sub–assy.

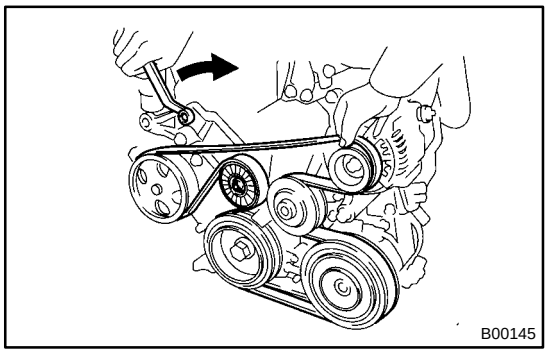

4. REMOVE FAN AND GENERATOR V BELT

(a) Turn the drive belt tensioner slowly clockwise and loosen it. Then, remove the drive belt and put back the drive belt tensioner little by little and fix it quietly.

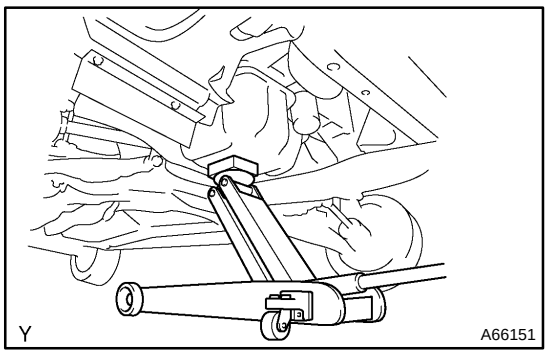

5. REMOVE ENGINE MOUNTING INSULATOR SUB–ASSY RH

(a) Set the jack to the engine.

HINT:

Place a wooden block between the jack and engine.

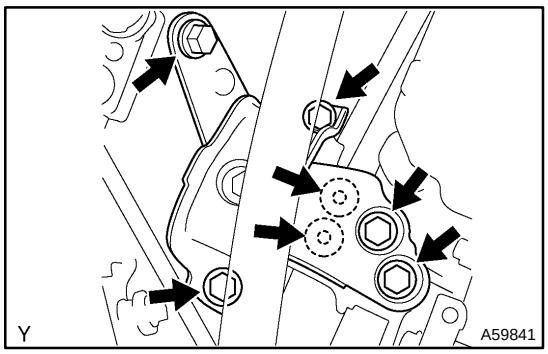

(b) Remove the 5 bolts, 2 nuts and engine mounting insulator sub–assy RH.

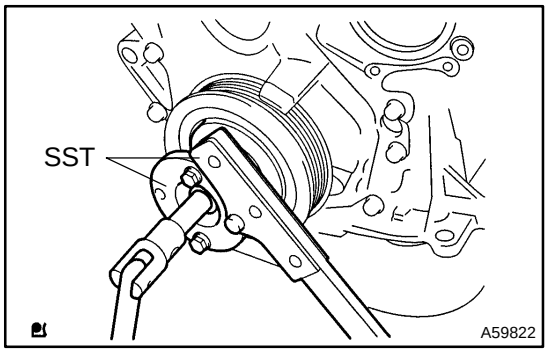

6. REMOVE CRANKSHAFT PULLEY

(a) Using SST, remove the pulley bolt.
SST 09213–70011 (09213–70020), 09330–00021

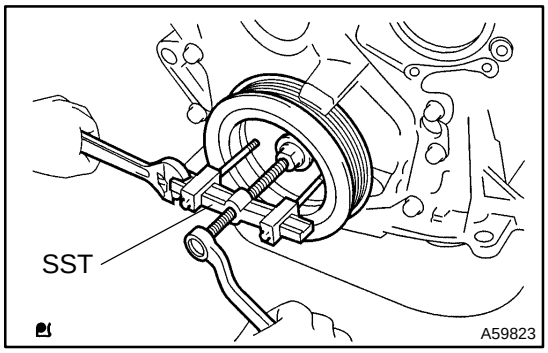

(b) Using SST, remove the crankshaft pulley.
SST 09950–50013 (09951–05010, 09952–05010, 09954–05021, 09953–05020, 09957–04010)

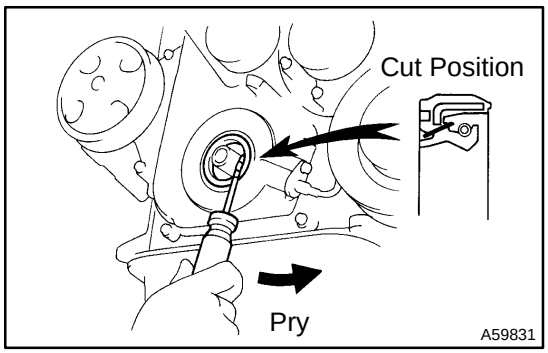

7. REMOVE TIMING GEAR COVER OIL SEAL

(a) Using a knife, cut off the oil seal lip.
(b) Using a screwdriver with taping its tip, pry out the oil seal.

NOTICE:

After the removal, check if the crankshaft is not damaged. If there is, mend it with a sandpaper (#400).

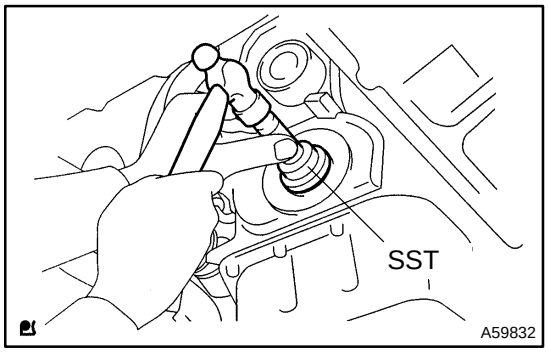

8. INSTALL TIMING GEAR COVER OIL SEAL

(a) Apply MP grease to a new oil seal lip.

NOTICE:

Keep the lip off foreign materials.

(b) Using SST and a hammer, tap in the oil seal until its surface is flush with the rear oil seal retainer edge.
SST 09223–22010

NOTICE:

Wipe off extra grease on the crank shaft.

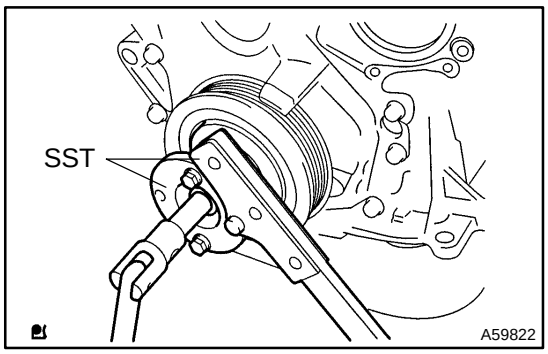

9. INSTALL CRANKSHAFT PULLEY

(a) Align the pulley set key with the key groove of the pulley, and slide on the pulley.

(b) Using SST, install the pulley bolt.
Torque: 118 N·m (1,203 kgf·cm, 87 ft·lbf)
SST 09213–70011 (09213–70020), 09330–00021

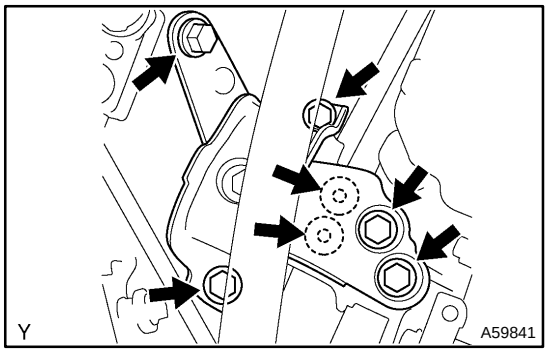

10. INSTALL ENGINE MOUNTING INSULATOR SUB–ASSY RH

(a) Install the engine mounting insulator sub–assy RH with the 5 bolts and the 2 nuts.
Torque: 52 N·m (530 kgf·cm, 38 ft·lbf)

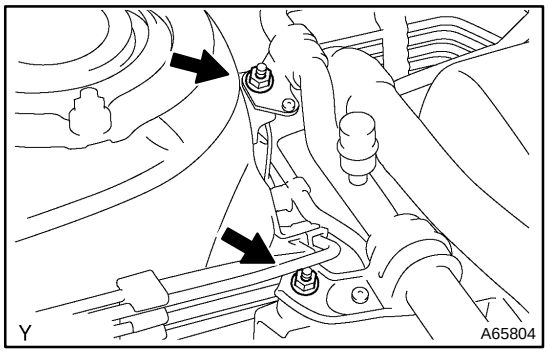

11. INSTALL SUCTION HOSE SUB–ASSY
Torque: 9.8 N·m (100 kgf·cm, 87 in.·lbf)

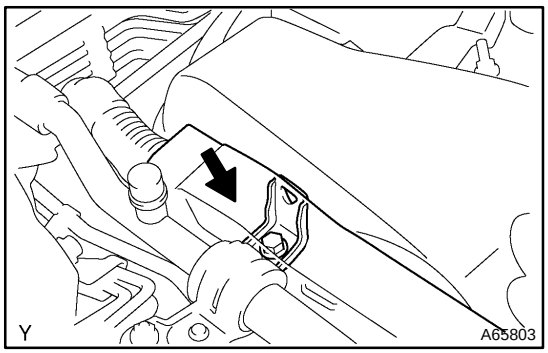

12. INSTALL WIRE HARNESS CLAMP
Torque: 10 N·m (102 kgf·cm, 7 ft·lbf)

13. CHECK ENGINE OIL LEAK

ENGINE REAR OIL SEAL (1ZZ–FE)

140ON–02

REPLACEMENT

1. **REMOVE MANUAL TRANSAXLE ASSY (M/T TRANSAXLE) (See page 41–17)**
2. **REMOVE AUTOMATIC TRANSAXLE ASSY (A/T TRANSAXLE, 2WD DRIVE TYPE) (See page 40–12)**
3. **REMOVE AUTOMATIC TRANSAXLE ASSY (A/T TRANSAXLE, 4WD DRIVE TYPE) (See page 40–36)**

HINT:

Remove and install the transaxle assembly after removing the engine assy W/ transaxle.

4. **REMOVE CLUTCH COVER ASSY (M/T TRANSAXLE) (See page 42–18)**
5. **REMOVE CLUTCH DISC ASSY (M/T TRANSAXLE) (See page 42–18)**

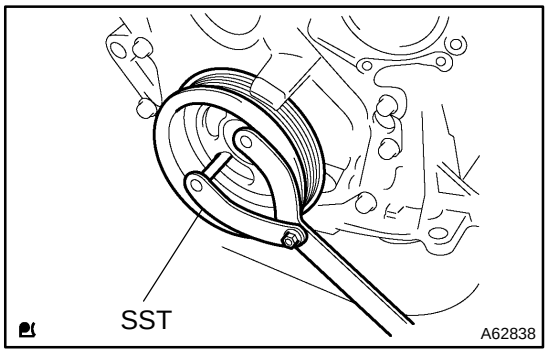

6. **REMOVE FLYWHEEL SUB–ASSY (M/T TRANSAXLE)**

(a) Fix the crankshaft with SST, then remove the 8 bolts and flywheel.

SST 09960–10010 (09962–01000, 09963–01000)

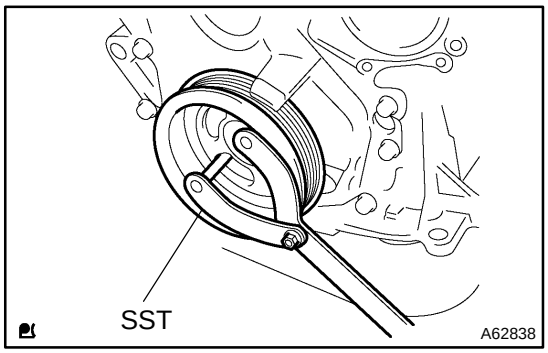

7. **REMOVE DRIVE PLATE & RING GEAR SUB–ASSY (A/T TRANSAXLE)**

(a) Fix the crankshaft with SST, then remove the 8 bolts and drive plate & ring gear.

SST 09960–10010 (09962–01000, 09963–01000)

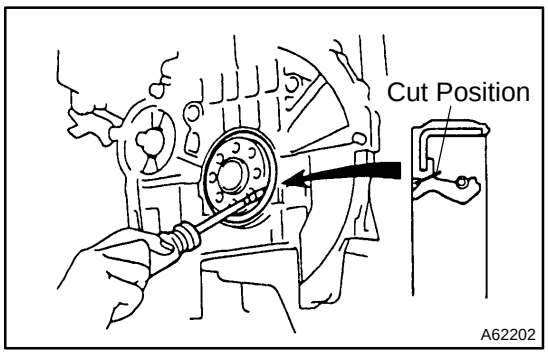

8. **REMOVE ENGINE REAR OIL SEAL**

(a) Using a knife, cut off the oil seal lip.

(b) Using a screwdriver with taping its tip, pry out the oil seal.

NOTICE:

After the removal, check if the crankshaft is not damaged. If there is, mend it with a sandpaper (#400).

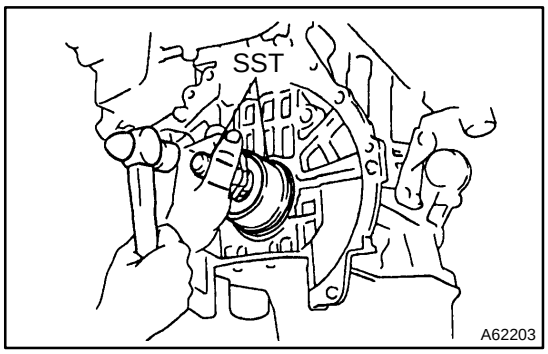

9. INSTALL ENGINE REAR OIL SEAL

(a) Apply MP grease to a new oil seal lip.

NOTICE:

Keep the lip off foreign materials.

(b) Using SST, tap in the oil seal until its surface is flush with the rear oil seal retainer edge.

SST 09223–15020, 09950–70010 (09951–07100)

NOTICE:

Wipe off extra grease on the crankshaft.

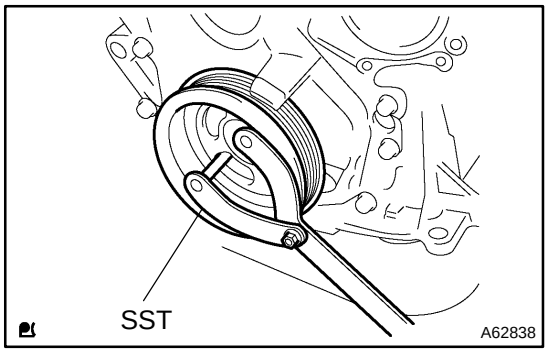

10. INSTALL FLYWHEEL SUB–ASSY (M/T TRANSAXLE)

(a) Fix the crankshaft with SST.

SST 09960–10010 (09962–01000, 09963–01000)

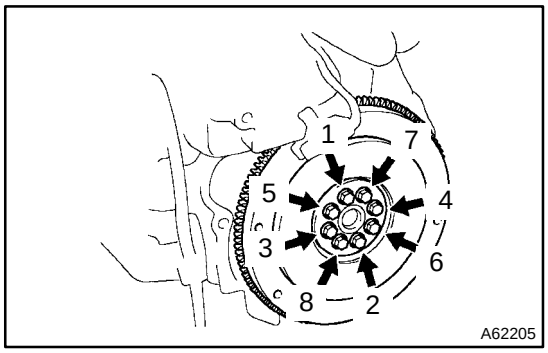

(b) Clean the bolt and bolt hole.

(c) Apply adhesive to the bolts.

Adhesive:

Part No. 09330–00070, THREE BOND or equivalent.

(d) Install and uniformly tighten the 8 bolts, in several passes, in the sequence shown.

Torque: 49 N·m (500 kgf·cm, 36 ft·lbf)

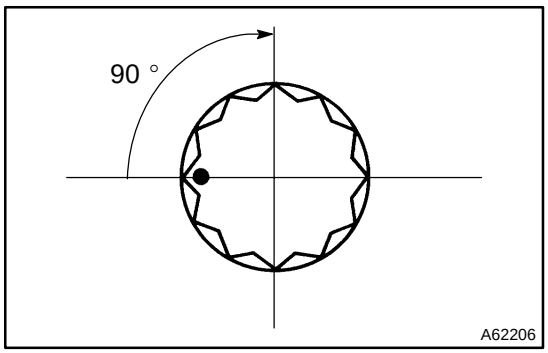

(e) Mark the bolts with paint.

(f) Retighten the bolts by an additional 90°.

(g) Check that the point marked bolts are moved at 90° angle.

11. INSTALL CLUTCH DISC ASSY (M/T TRANSAXLE) (See page 42–18)

12. INSTALL CLUTCH COVER ASSY (M/T TRANSAXLE) (See page 42–18)

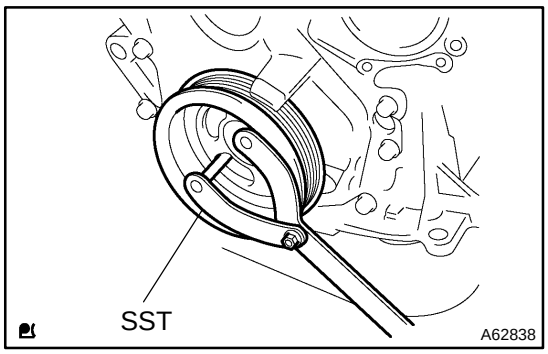

13. INSTALL DRIVE PLATE & RING GEAR SUB–ASSY (A/T TRANSAXLE)

(a) Fix the crankshaft with SST.
SST 09960–10010 (09962–01000, 09963–01000)

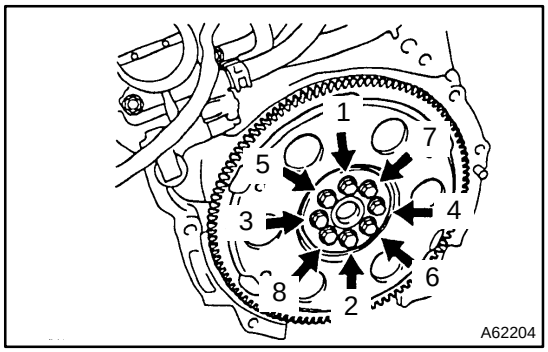

(b) Clean the bolt and bolt hole.

(c) Apply adhesive to the bolts.
Adhesive:
Part No. 09330–00070, THREE BOND or equivalent.

(d) Install and uniformly tighten the 8 bolts, in several passes, in the sequence shown.

(e) Fix the crankshaft with SST.
Torque: 88 N·m (897 kgf·cm, 65 ft·lbf)

14. INSTALL MANUAL TRANSAXLE ASSY (M/T TRANSAXLE) (See page 41–17)

15. INSTALL AUTOMATIC TRANSAXLE ASSY (A/T TRANSAXLE, 2WD DRIVE TYPE) (See page 40–12)

16. INSTALL AUTOMATIC TRANSAXLE ASSY (A/T TRANSAXLE, 4WD DRIVE TYPE) (See page 40–36)

ENGINE REAR OIL SEAL (2ZZ–GE)

140RH–01

REPLACEMENT

1. SEPARATE MANUAL TRANSAXLE ASSY (M/T TRANSAXLE) (See page 41–17)
2. SEPARATE AUTOMATIC TRANSAXLE ASSY (A/T TRANSAXLE) (See page 40–25)
3. REMOVE CLUTCH COVER ASSY (M/T TRANSAXLE) (See page 42–18)
4. REMOVE CLUTCH DISC ASSY (M/T TRANSAXLE) (See page 42–18)

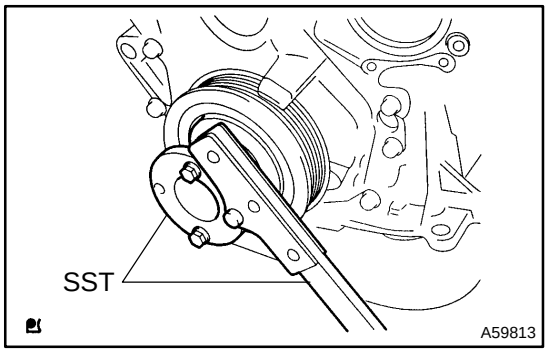

5. REMOVE FLYWHEEL SUB–ASSY (M/T TRANSAXLE)

(a) Fix the crankshaft with SST, them remove the 8 bolts and flywheel.
SST 09213–70011 (09213–70020), 09330–00021

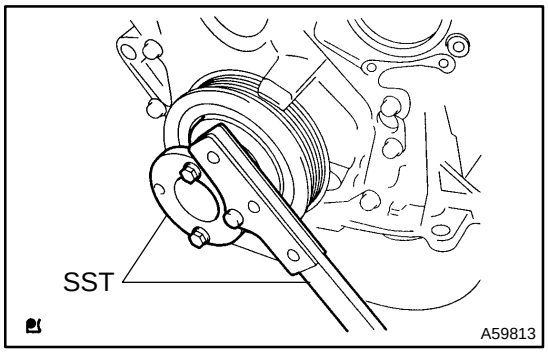

6. REMOVE DRIVE PLATE & RING GEAR SUB–ASSY (A/T TRANSAXLE)

(a) Fix the crankshaft with SST, them remove the 8 bolts and drive plate & ring gear.
SST 09213–70011 (09213–70020), 09330–00021

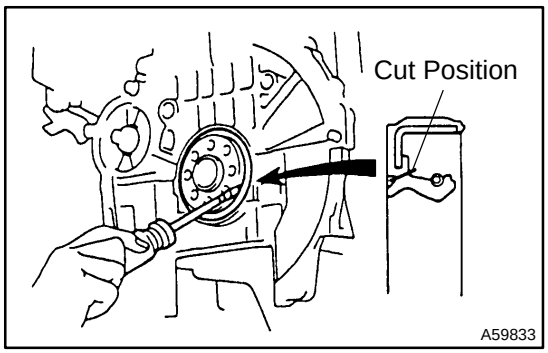

7. REMOVE ENGINE REAR OIL SEAL

(a) Using a knife, cut off the oil seal lip.
(b) Using a screwdriver with taping its tip, pry out the oil seal.

NOTICE:

After the removal, check if the crankshaft is not damaged. If there is, mend it with a sandpaper (#400).

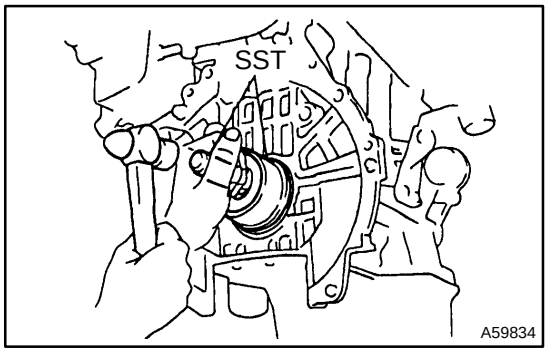

8. INSTALL ENGINE REAR OIL SEAL

(a) Apply MP grease to a new oil seal lip.

NOTICE:

Keep the lip off foreign materials.

(b) Using SST and a hammer, tap in the oil seal until its surface is flush with the rear oil seal retainer edge.
SST 09223–15030, 09950–70010 (09951–07100)

NOTICE:

Wipe off extra grease on the crank shaft.

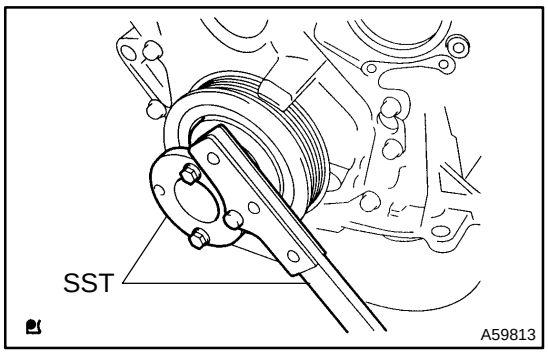

9. INSTALL FLYWHEEL SUB–ASSY (M/T TRANSAXLE)

(a) Fix the crankshaft with SST.
SST 09213–70011 (09213–70020), 09330–00021

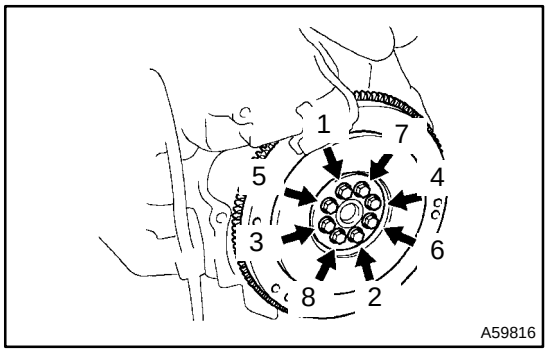

(b) Clean the bolt and the bolt hole.
(c) Apply Adhesive to the bolts.
Adhesive:
Part No. 09330–00070, THREE BOND or equivalent.
(d) Install and uniformly tighten the 8 bolts, in several passes, in the sequence shown.
Torque: 49 N·m (500 kgf·cm, 36 ft·lbf)

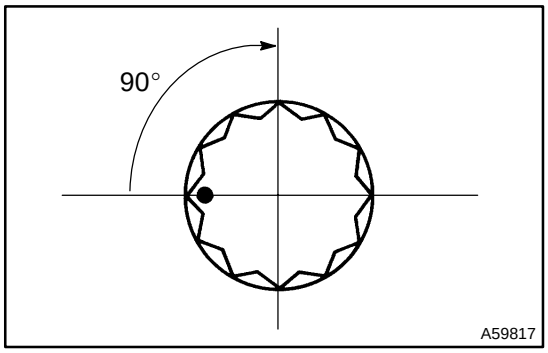

(e) Mark the bolt with paint.
(f) Retighten the bolts by an additional 90°.
(g) Check that the point marked bolts are moved at 90° angle.

10. INSTALL CLUTCH DISC ASSY (M/T TRANSAXLE) (See page 42–18)
SST 09301–00210

11. INSTALL CLUTCH COVER ASSY (M/T TRANSAXLE) (See page 42–18)
SST 09301–00210

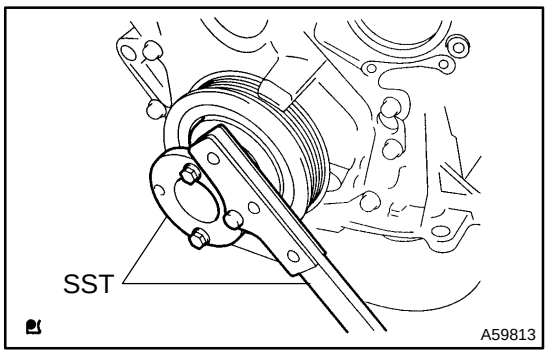

12. INSTALL DRIVE PLATE & RING GEAR SUB–ASSY (A/T TRANSAXLE)

(a) Fix the crankshaft with SST.
SST 09213–70011 (09213–70020), 09330–00021

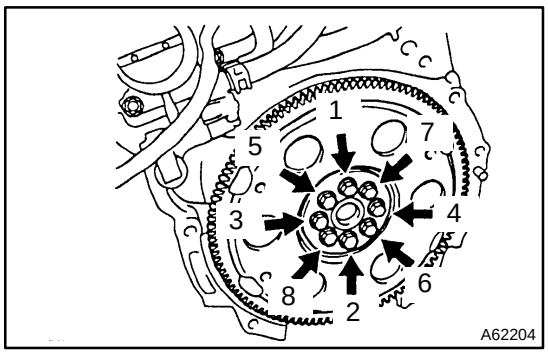

(b) Clean the bolt and bolt hole.

(c) Apply adhesive to the bolts.
Adhesive:
Part No. 09330–00070, THREE BOND or equivalent.

(d) Install and uniformly tighten the 8 bolts, in several passes, in the sequence shown.

(e) Fix the crankshaft with SST.
Torque: 88 N·m (897 kgf·cm, 65 ft·lbf)

13. INSTALL MANUAL TRANSAXLE ASSY (M/T TRANSAXLE) (See page 41–17)

14. INSTALL AUTOMATIC TRANSAXLE ASSY (A/T TRANSAXLE) (See page 40–25)

CYLINDER HEAD GASKET (1ZZ–FE)

140OK–02

COMPONENTS

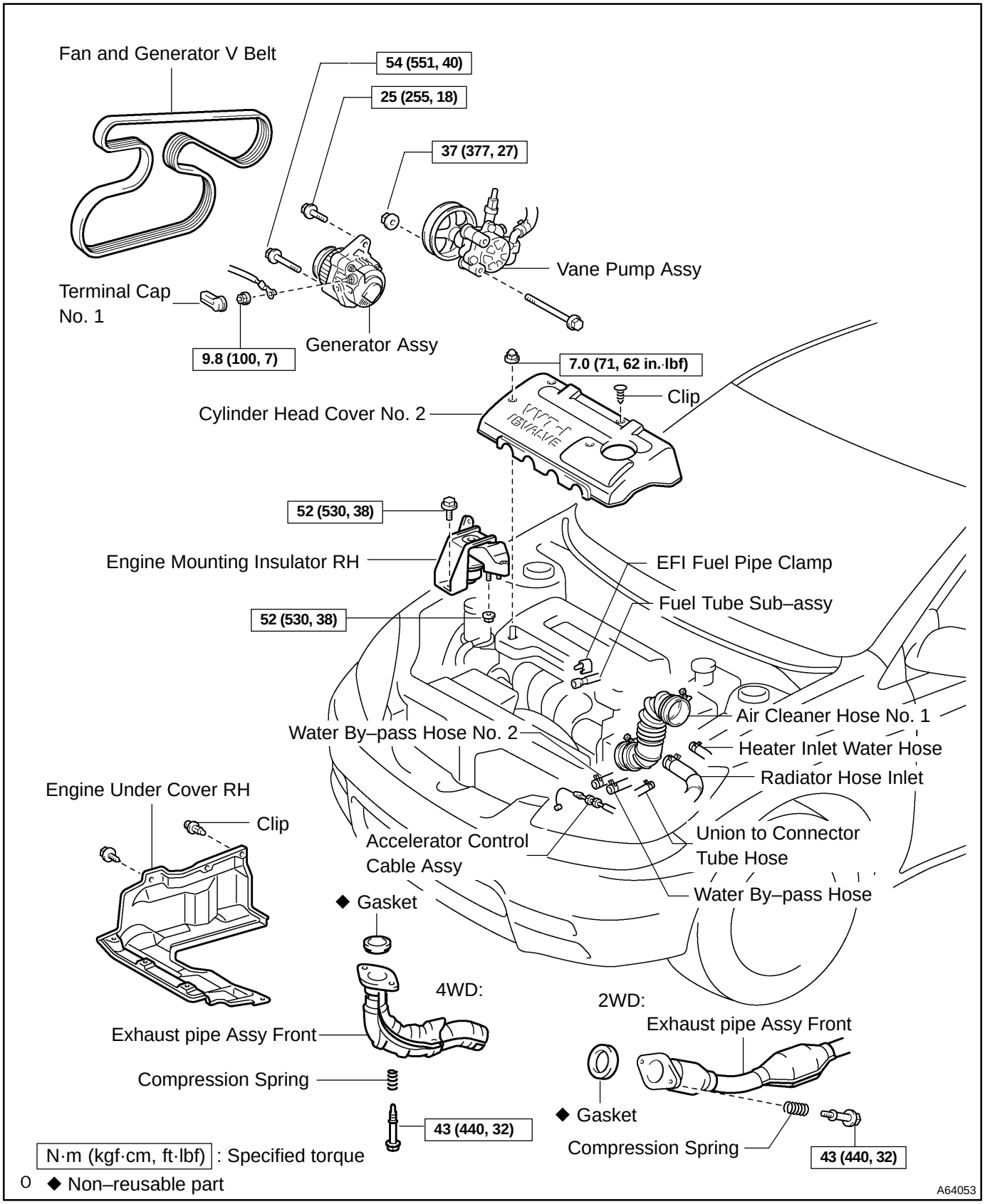

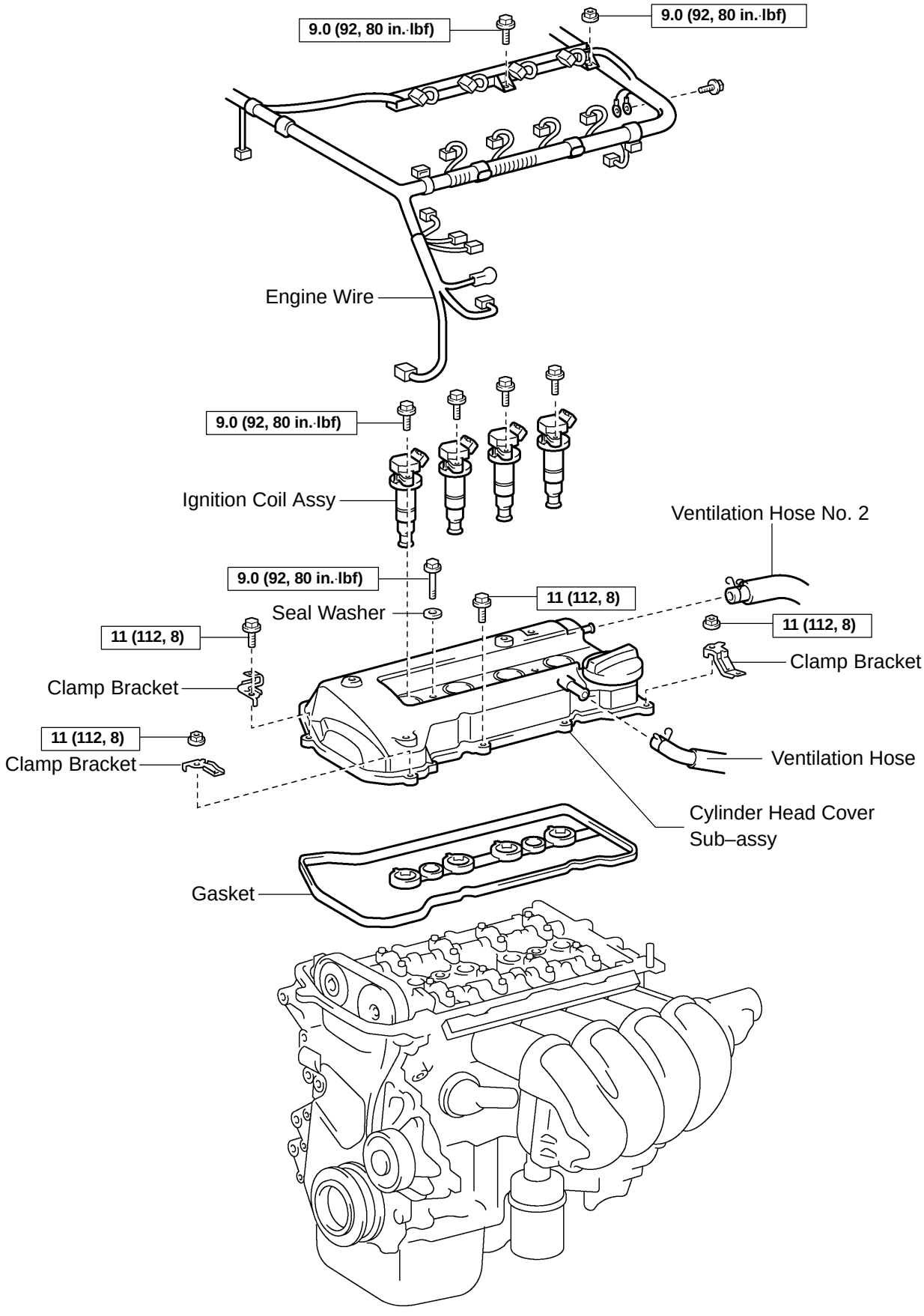

O N·m (kgf·cm, ft·lbf) : Specified torque

A64043

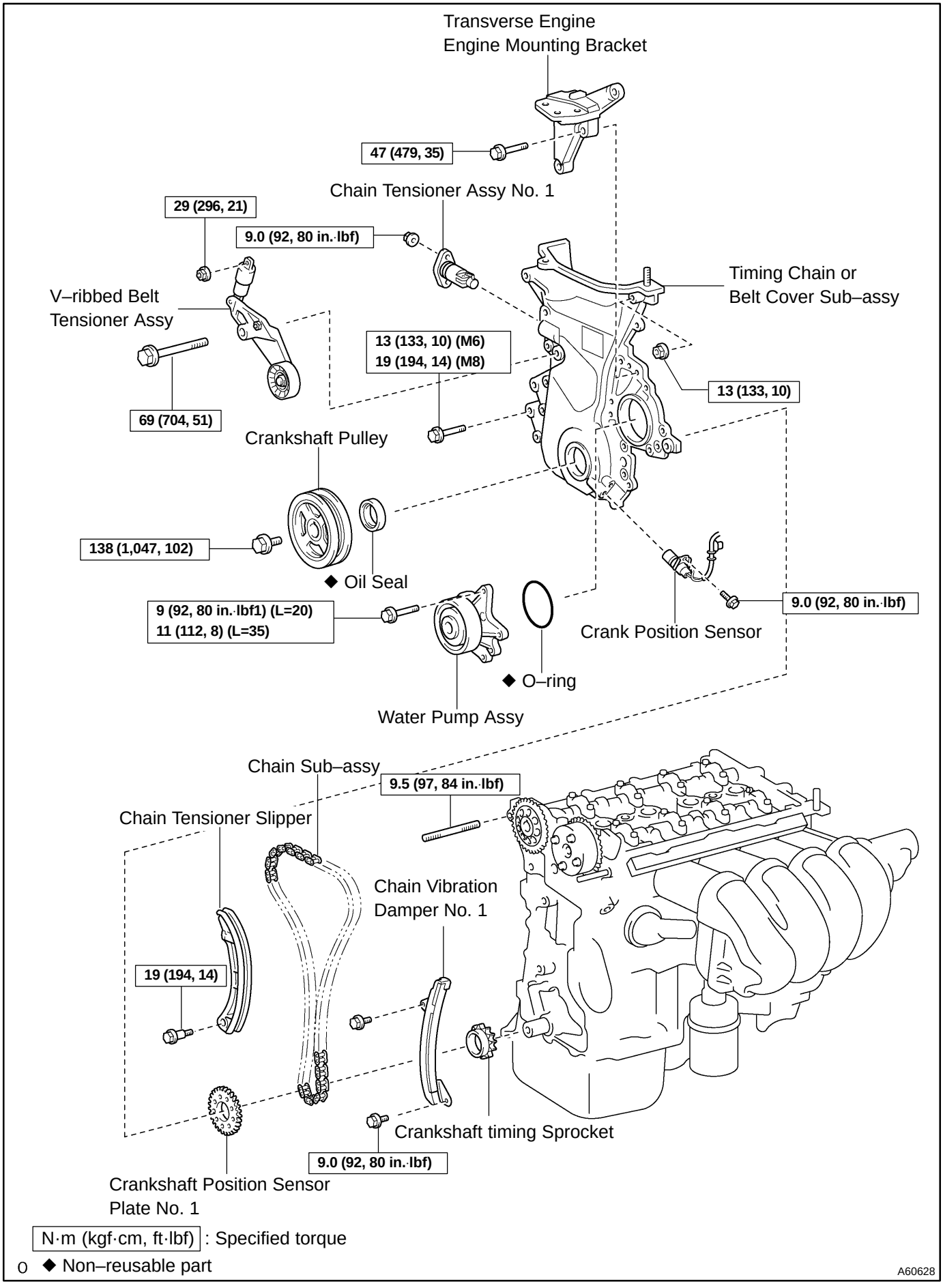
Transverse Engine
Engine Mounting Bracket
47 (479, 35)
Chain Tensioner Assy No. 1
29 (296, 21)
9.0 (92, 80 in.·lbf)
V–ribbed Belt
Tensioner Assy
Timing Chain or
Belt Cover Sub–assy
13 (133, 10) (M6)
19 (194, 14) (M8)
13 (133, 10)
69 (704, 51)
Crankshaft Pulley
138 (1,047, 102)
◆ Oil Seal
9 (92, 80 in.·lbf1) (L=20)
11 (112, 8) (L=35)
9.0 (92, 80 in.·lbf)
Crank Position Sensor
◆ O–ring
Water Pump Assy
Chain Sub–assy
9.5 (97, 84 in.·lbf)
Chain Tensioner Slipper
Chain Vibration
Damper No. 1
19 (194, 14)
Crankshaft timing Sprocket
9.0 (92, 80 in.·lbf)
Crankshaft Position Sensor
Plate No. 1
N·m (kgf·cm, ft·lbf) : Specified torque
◆ Non–reusable part
A60628

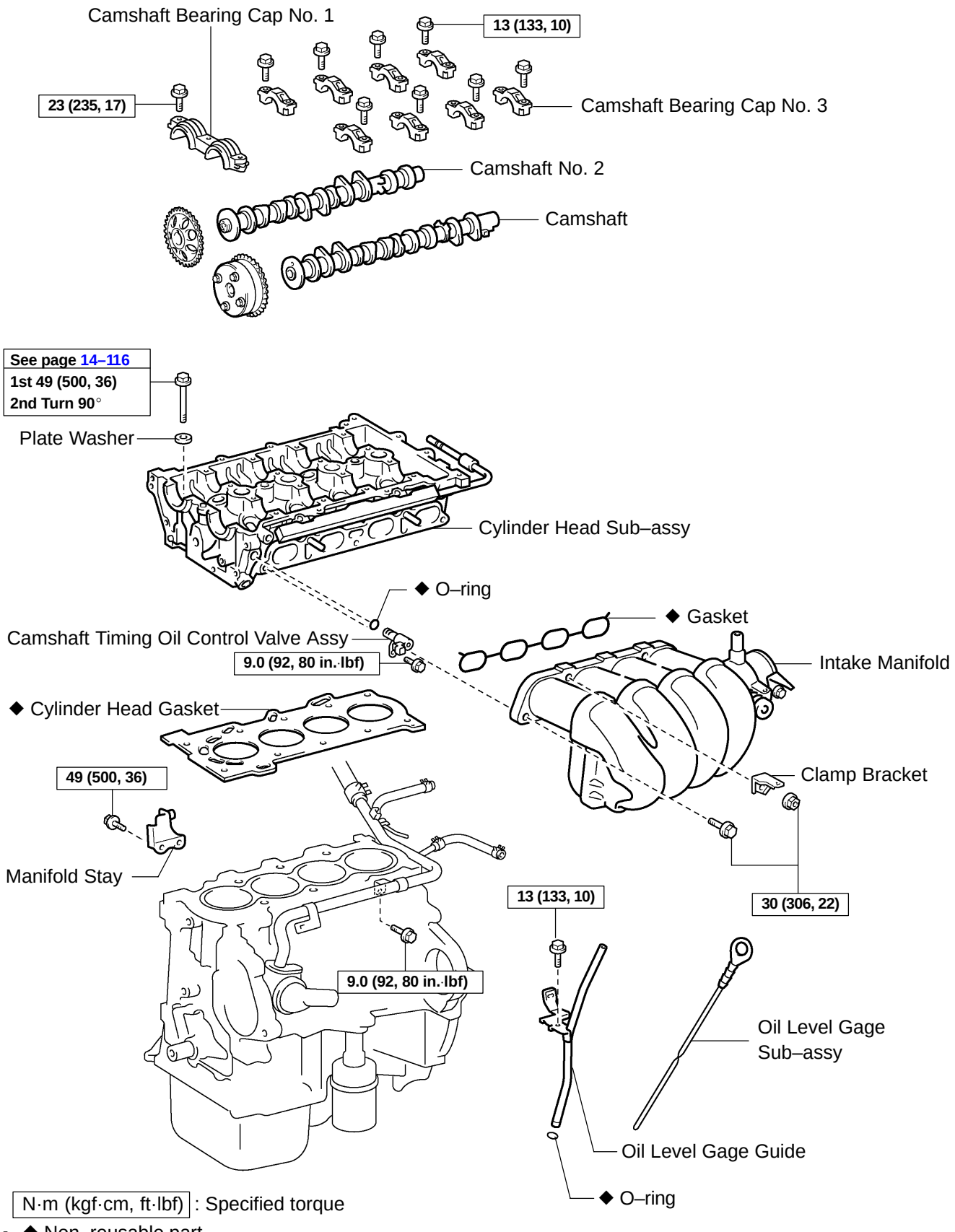
Camshaft Bearing Cap No. 1
13 (133, 10)
23 (235, 17)
Camshaft Bearing Cap No. 3
Camshaft No. 2
Camshaft
See page 14–116
1st 49 (500, 36)
2nd Turn 90°
Plate Washer
Cylinder Head Sub–assy
◆ O–ring
◆ Gasket
Camshaft Timing Oil Control Valve Assy
9.0 (92, 80 in.·lbf)
Intake Manifold
◆ Cylinder Head Gasket
49 (500, 36)
Clamp Bracket
Manifold Stay
13 (133, 10)
30 (306, 22)
9.0 (92, 80 in.·lbf)
Oil Level Gage Sub–assy
Oil Level Gage Guide
◆ O–ring
N·m (kgf·cm, ft·lbf) : Specified torque
◆ Non–reusable part
A64046

140R3–01

REPLACEMENT

1. **WORK FOR PREVENTING GASOLINE FROM SPILLING OUT (See page 11–1)**
2. **REMOVE ENGINE UNDER COVER RH**
3. **DRAIN COOLANT (See page 16–6)**
4. **REMOVE FRONT WHEEL RH**

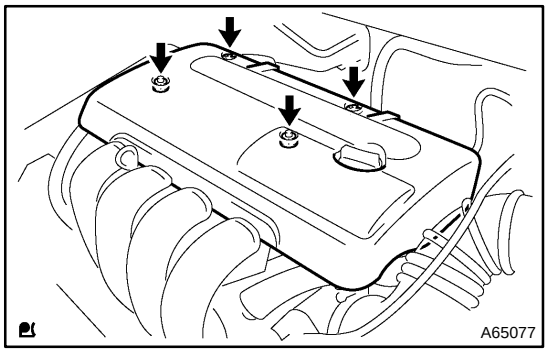

5. **REMOVE CYLINDER HEAD COVER NO.2**

(a) Remove the 2 nuts, 2 clips and cylinder head cover.

6. **REMOVE AIR CLEANER HOSE NO.1**

(a) Loosen the 2 air cleaner hose clamp bolts, and remove the air cleaner hose.

7. **SEPARATE ACCELERATOR CONTROL CABLE ASSY**

(a) Loosen the nut, and remove the accelerator control cable from the accelerator control cable bracket.

8. **DISCONNECT WATER BY–PASS HOSE**

(a) Disconnect the water by–pass hose from the throttle body.

9. **DISCONNECT WATER BY–PASS HOSE NO.2**

(a) Disconnect the water by–pass hose from the throttle body.

10. **REMOVE EFI FUEL PIPE CLAMP (See page 11–10)**
11. **DISCONNECT FUEL TUBE SUB–ASSY (See page XX–XXX)**

SST 09268–21010

12. **DISCONNECT UNION TO CONNECTOR TUBE HOSE**

(a) Disconnect the union to connector tube hose from the hose to hose tube.

13. **DISCONNECT RADIATOR HOSE INLET**

(a) Disconnect radiator hose inlet from the cylinder head.

14. **DISCONNECT HEATER INLET WATER HOSE**

(a) Disconnect the heater inlet water hose from the cylinder head.

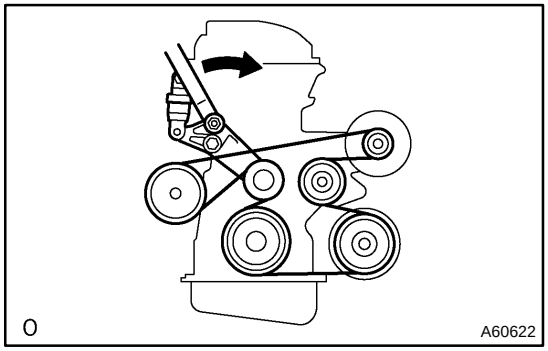

15. **REMOVE FAN AND GENERATOR V BELT**

(a) Turn the V–ribbed belt tensioner slowly clockwise and loosen it. Then, remove the fan and generator belt V and put back the V–ribbed belt tensioner little by little and fix it quietly.

16. SEPARATE VANE PUMP ASSY (See page 51–8)

NOTICE:

Do not disconnect the hose.

17. REMOVE GENERATOR ASSY (See page 19–15)

18. SEPARATE EXHAUST PIPE ASSY FRONT

(a) Remove the 2 bolts, 2 compression spring installing the front side of exhaust pipe.

(b) Remove the gasket.

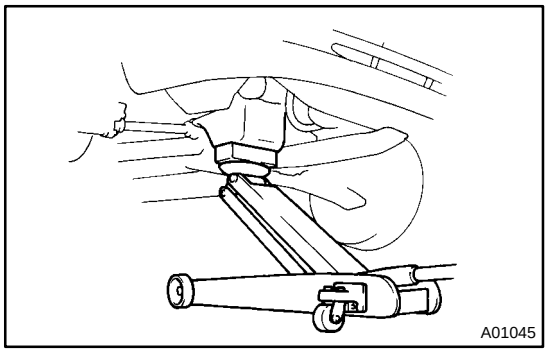

19. REMOVE ENGINE MOUNTING INSULATOR SUB–ASSY RH

(a) Remove the PS oil pump reservoir and put it aside.

(b) Place a wooden block between the jack and engine, and set the jack, then remove the 4 bolts, the 2 nuts and engine mounting insulator RH.

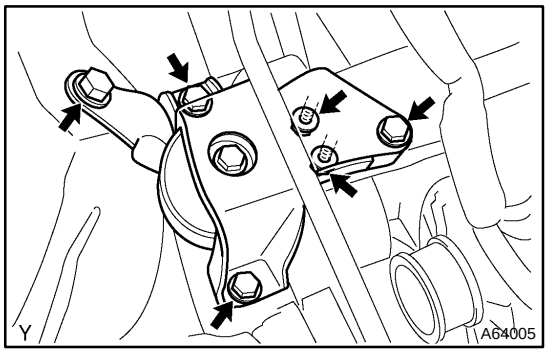

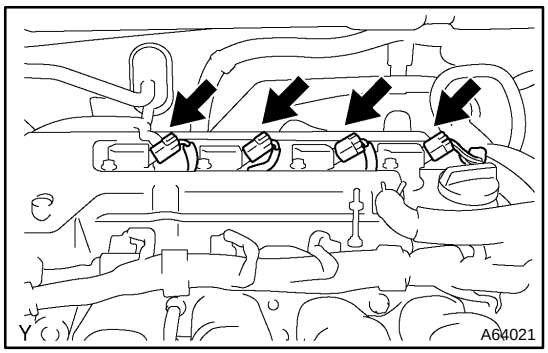

20. DISCONNECT ENGINE WIRE

(a) Remove the 5 clamps from the 5 clamp brackets.

(b) Disconnect the 4 ignition coil connectors.

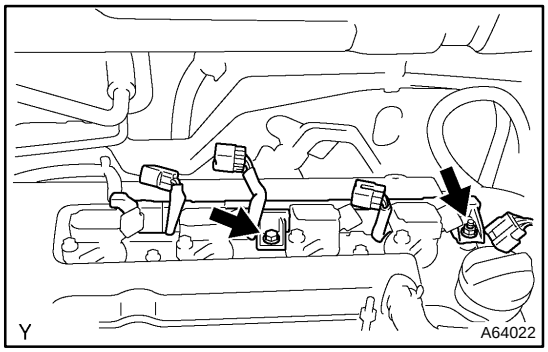

(c) Remove the bolt and nut installing the engine wire.

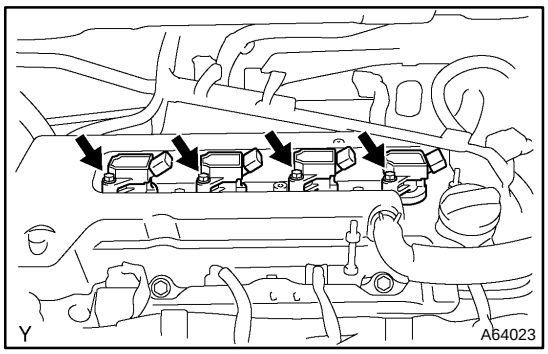

21. REMOVE IGNITION COIL ASSY

(a) Remove the 4 bolts and 4 ignition coils.

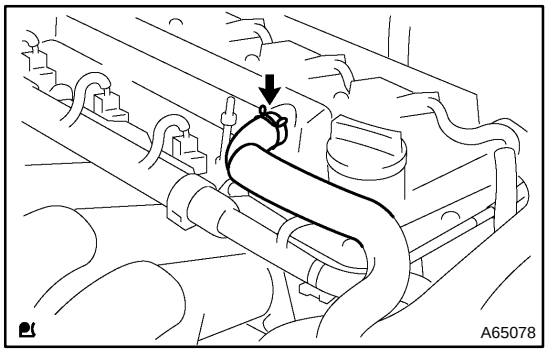

22. DISCONNECT VENTILATION HOSE

(a) Disconnect the ventilation hose from the cylinder head cover.

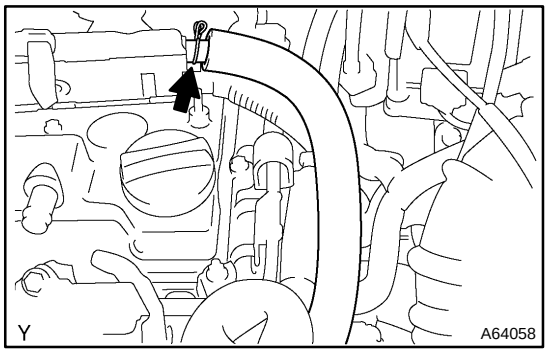

23. DISCONNECT VENTILATION HOSE NO.2

(a) Disconnect the ventilation hose from the cylinder head cover.

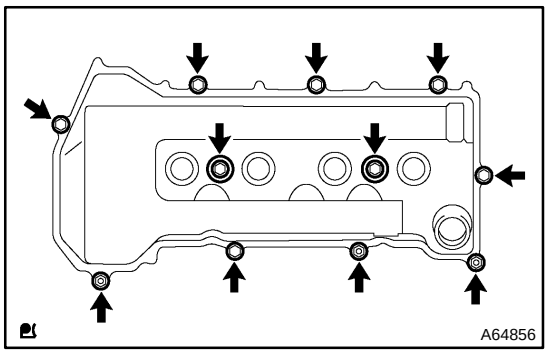

24. REMOVE CYLINDER HEAD COVER SUB–ASSY

(a) Remove the 9 bolts, 2 seal washers, 2 nuts, 3 clamp brackets and cylinder head cover.

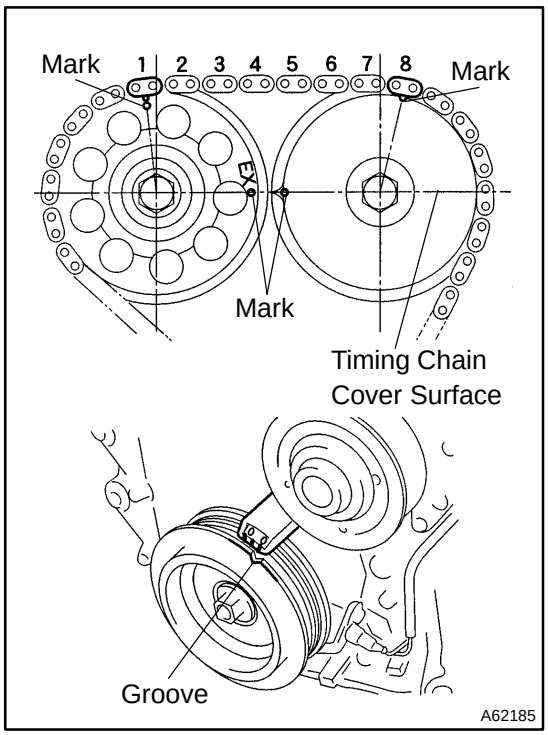

25. SET NO. 1 CYLINDER TO TDC/COMPRESSION

(a) Turn the crankshaft pulley, and align its groove with timing mark ”0” of the timing chain cover.

(b) Check that the point marks of the camshaft timing sprocket and VVT timing sprocket are in straight line on the timing chain cover surface as shown in the illustration.

HINT:

If not, turn the crankshaft 1 revolution (360°) and align the marks as above.

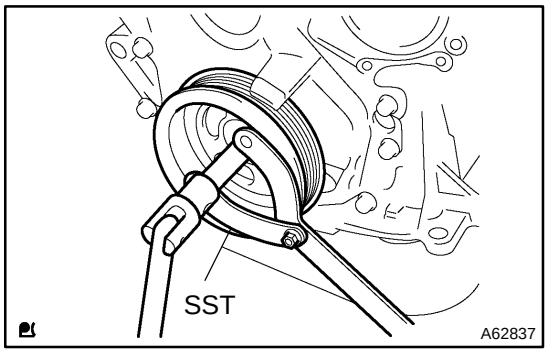

26. REMOVE CRANKSHAFT PULLEY

(a) Using SST, remove the pulley bolt.

SST 09960–10010 (09962–01000, 09963–01000)

(b) Remove the crankshaft pulley from the crankshaft.

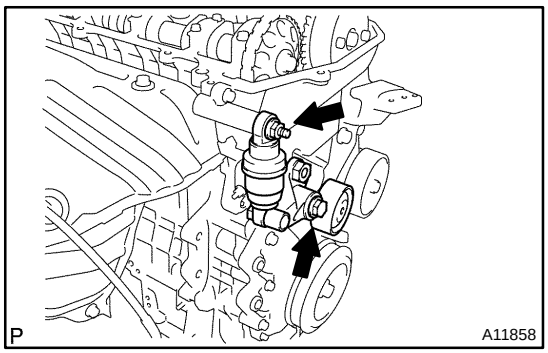

27. REMOVE V–RIBBED BELT TENSIONER ASSY

(a) Remove the bolt, nut and V–ribbed belt tensioner.

HINT:

Handle a jack up and down to remove the bolt.

28. REMOVE WATER PUMP ASSY (See page 16–10)

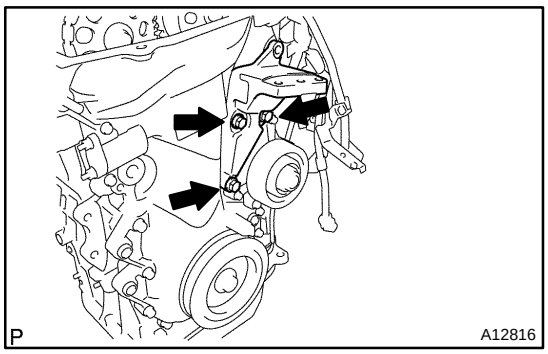

29. REMOVE TRANSVERSE ENGINE ENGINE MOUNTING BRACKET

(a) Remove the 3 bolts and transverse engine engine mounting bracket.

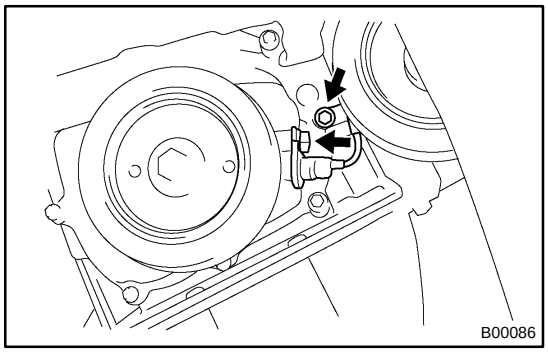

30. REMOVE CRANK POSITION SENSOR

(a) Remove the 2 bolts installing the crank position sensor.

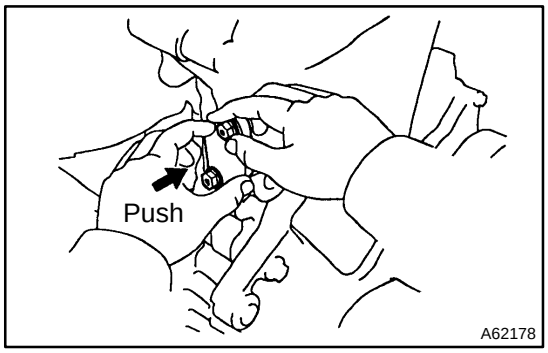

31. REMOVE CHAIN TENSIONER ASSY NO.1

(a) Remove the 2 nuts and chain tensioner.

NOTICE:

Be sure not to revolve the crankshaft without the chain tensioner.

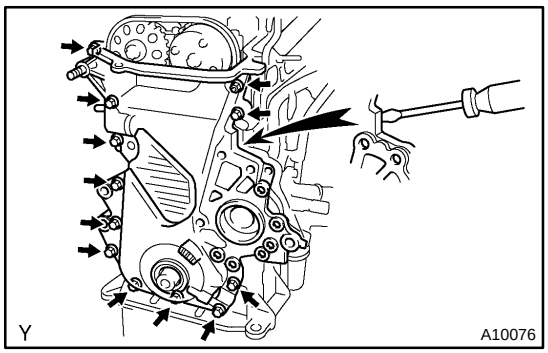

32. REMOVE TIMING CHAIN OR BELT COVER SUB–ASSY

(a) Remove the 11 bolts and nuts.

(b) Using a torx wrench socket (E8), remove the stud bolt.

(c) Remove the timing chain cover by prying the portions between the cylinder head and cylinder block with a screwdriver.

NOTICE:

Be careful no tot damage the contact surfaces of the timing chain cover, cylinder head and cylinder block.

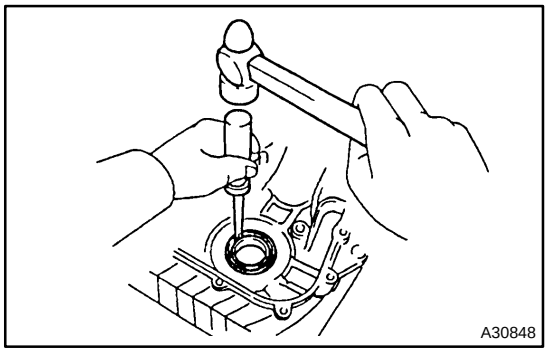

33. REMOVE TIMING GEAR COVER OIL SEAL

(a) Using a screwdriver, remove the oil seal.

34. REMOVE CRANKSHAFT POSITION SENSOR PLATE NO.1

35. REMOVE CHAIN TENSIONER SLIPPER

(a) Remove the bolt and chain tensioner slipper.

36. REMOVE CHAIN VIBRATION DAMPER NO.1

(a) Remove the 2 bolt and chain vibration damper.

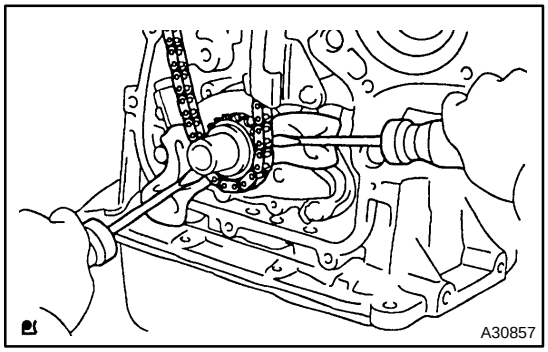

37. REMOVE CHAIN SUB–ASSY

(a) Remove the timing chain with the crankshaft timing gear plying screwdrivers as shown in the illustration.

NOTICE:

- **Put shop rag to protect the engine.**
- **In case of revolving the camshafts with the chain off the sprockets, turn the crankshaft 1/4 revolution for valves not to touch the pistons.**

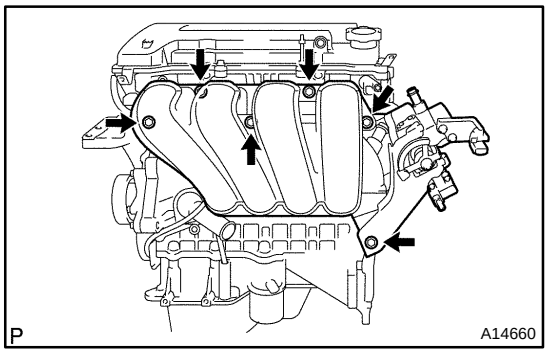

38. REMOVE INTAKE MANIFOLD

(a) Disconnect the 2 water hoses from the throttle body.

(b) Disconnect the 2 vacuum hoses from the intake manihold.

(c) Remove the 4 bolts, 2 nuts, 2 wire brackets, the intake manihold and throttle body assembly.

(d) Remove the gasket from the intake manihold and throttle body assembly.

39. REMOVE OIL LEVEL GAGE SUB–ASSY

(a) Remove the oil level gage from the oil level gage guide.

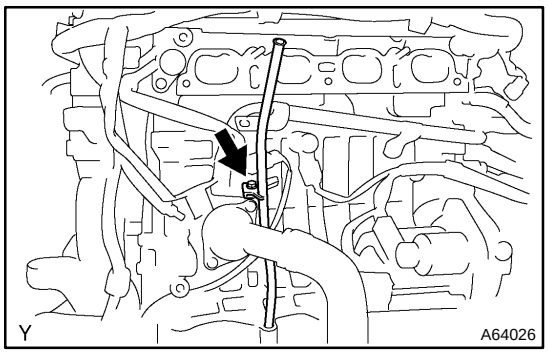

40. REMOVE OIL LEVEL GAGE GUIDE

(a) Remove the bolt and oil level gage guide.

41. SEPARATE WATER BY–PASS PIPE NO.1

(a) Remove the 2 bolts installing the water by–pass pipe.

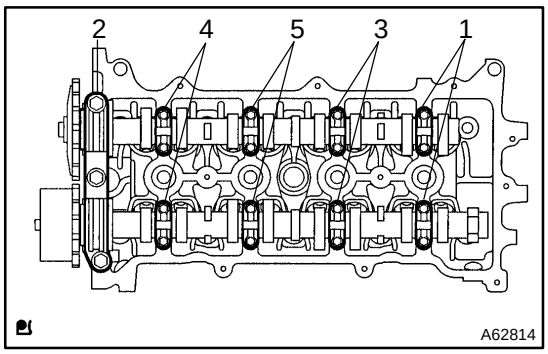

42. REMOVE CAMSHAFT

(a) Uniformly loosen and remove the 19 bearing cap bolts, in several passes, in the sequence shown, and remove the 9 bearing caps, intake and exhaust camshafts.

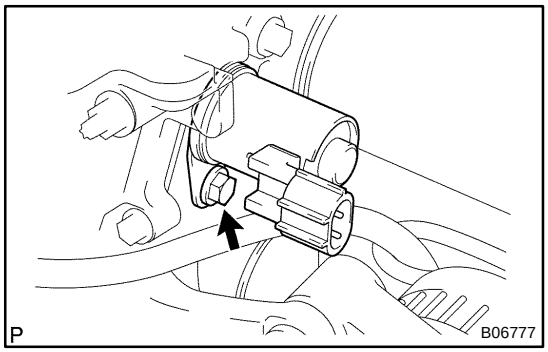

43. REMOVE CAMSHAFT TIMING OIL CONTROL VALVE ASSY

(a) Remove the bolt and camshaft timing oil control valve.

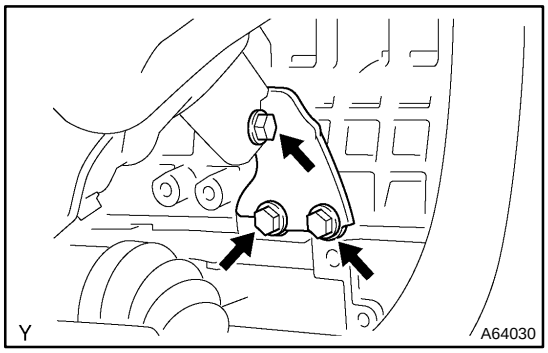

44. REMOVE MANIFOLD STAY

(a) 2WD Drive Type

(1) Remove the 3 bolts and manifold stay.

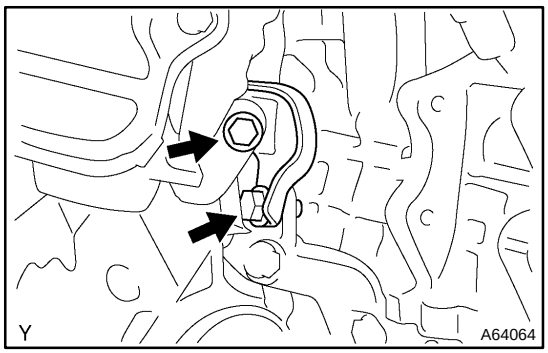

(b) 4WD Drive Type

(1) Remove the 2 bolts and manifold stay.

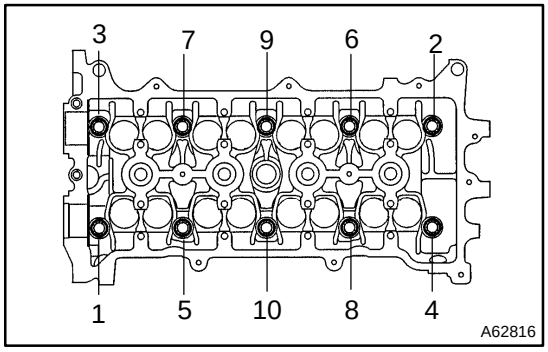

45. REMOVE CYLINDER HEAD SUB–ASSY

(a) Using a 10 mm bi–hexagon wrench, uniformly loosen and remove the 10 cylinder head bolts, in several passes, in the sequence shown, and remove the 10 cylinder head bolts and 10 plate washers.

(b) Remove the cylinder head.

46. REMOVE CYLINDER HEAD GASKET

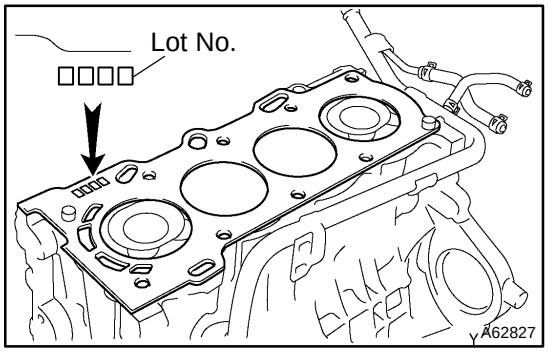

47. INSTALL CYLINDER HEAD GASKET

(a) Place a new cylinder head gasket on the cylinder block surface with the Lot No. stamp upward.

NOTICE:

- **Pay attention to the installation direction.**
- **Place the cylinder head quietly in order not to damage the gasket with the bottom part of the head.**

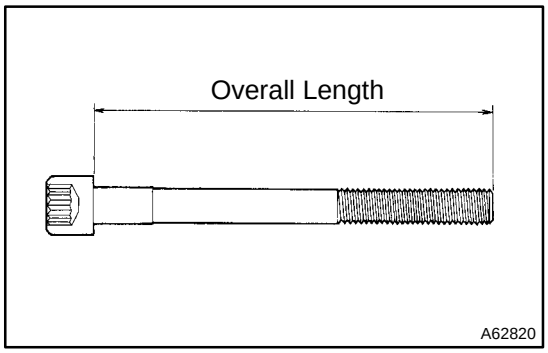

48. INSPECT CYLINDER HEAD SET BOLT

(a) Using a vernier calipers, measure the length of cylinder head bolt from the seat to the end.

Standard length: 146.8 – 148.2 mm (5.780 – 5.835 in.)
Maximum length: 148.5 mm (5.846 in.)

If the length surpasses the maximum, replace the bolt.

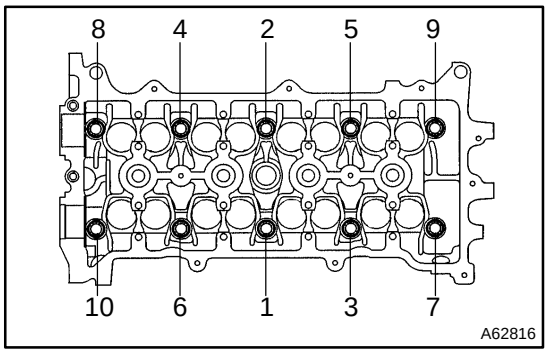

49. INSTALL CYLINDER HEAD SUB–ASSY

HINT:

The cylinder head bolts are tightened in 2 progressive steps.

(a) Apply a light coat of engine oil on the threads and under the heads of the cylinder head bolts.

(b) Using a 10 mm bi–hexagon wrench, install and uniformly tighten the 10 cylinder head bolts and plate washers, in several passes, in the sequence shown.

Torque: 49 N·m (500 kgf·cm, 36 ft·lbf)

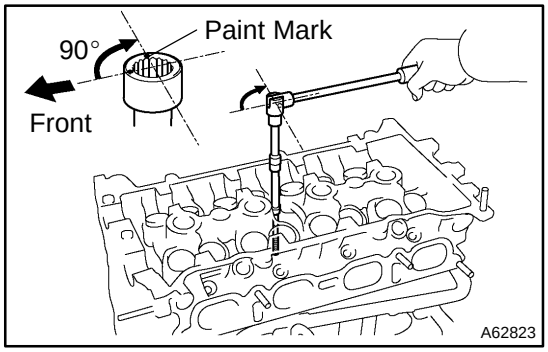

(c) Make the front of the cylinder head bolt with paint.

(d) Retighten the cylinder head bolts 90° in the numerical order shown.

(e) Check that the point marked bolts are moved at 90° angle.

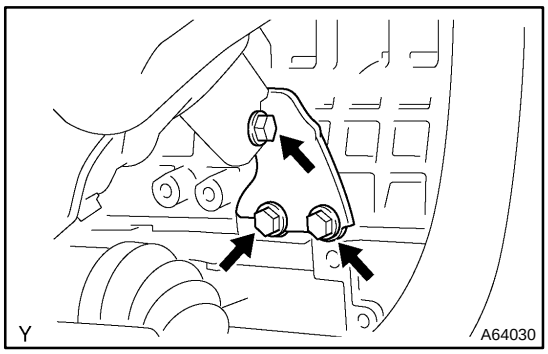

50. INSTALL MANIFOLD STAY

(a) 2WD Drive Type

(1) Install the manifold stay with 3 bolts.

Torque: 49 N·m (500 kgf·cm, 36 ft·lbf)

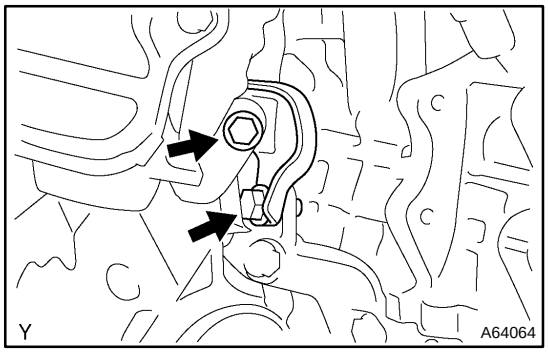

(b) 4WD Drive Type

(1) Install the manifold stay with 2 bolts.

Torque: 49 N·m (500 kgf·cm, 36 ft·lbf)

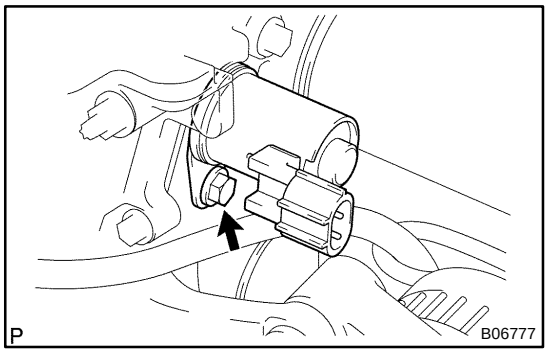

51. INSTALL CAMSHAFT TIMING OIL CONTROL VALVE ASSY

(a) Apply a light coat of engine oil on a new O–ring, and install it to the camshaft timing oil control valve.

(b) Install the camshaft timing oil control valve with the bolt.

Torque: 9.0 N·m (92 kgf·cm, 80 in.·lbf)

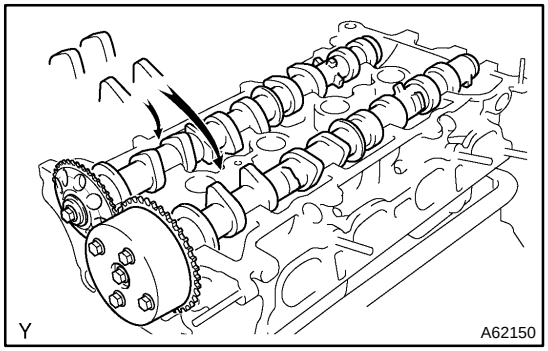

52. INSTALL CAMSHAFT

(a) Apply a light coat of engine oil on the camshaft journals.

(b) Place the 2 camshafts on the cylinder head with the No. 1 cam lobes facing as shown the illustration.

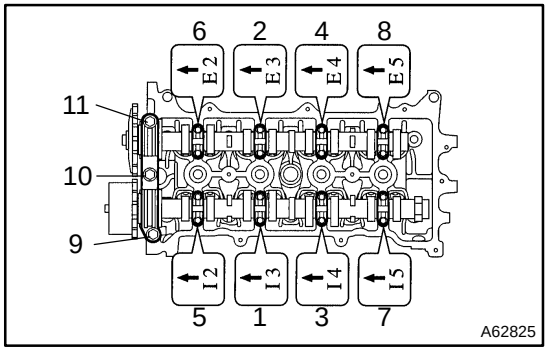

(c) Examine the front marks and numbers and tighten the bolts in the order shown in the illustration.

Torque:

Bearing cap No. 1 23 N·m (235 kgf·cm, 17 ft·lbf)

Bearing cap No. 3 13 N·m (133 kgf·cm, 10 ft·lbf)

53. INSTALL WATER BY–PASS PIPE NO.1

(a) Install the water by–pass pipe with the 2 bolts.
Torque: 9.0 N·m (92 kgf·cm, 80 in.·lbf)

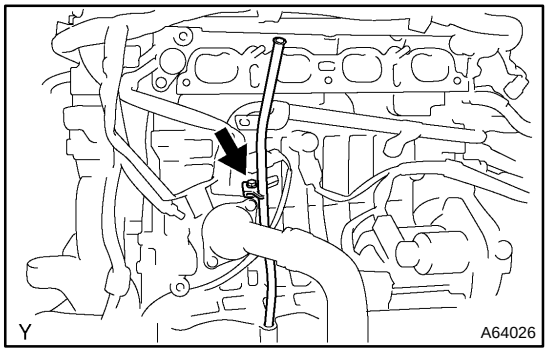

54. INSTALL OIL LEVEL GAGE GUIDE

(a) Apply a light coat of engine oil on a new O–ring, and install it to the oil level gage guide.
(b) Install the oil level gage guide with the bolt.
Torque: 13 N·m (133 kgf·cm, 10 ft·lbf)

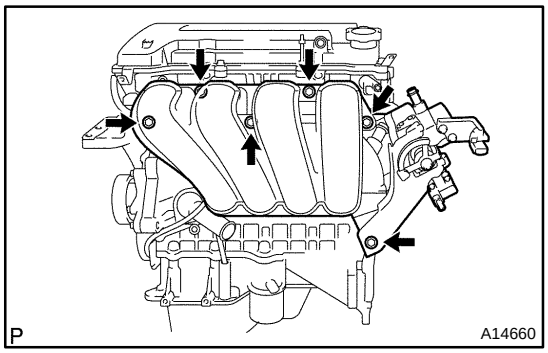

55. INSTALL INTAKE MANIFOLD

(a) Install a new gasket to the intake manifold.
(b) Install the intake manifold and throttle body assembly with the 2 brackets, 4 bolts and 2 nuts. Uniformly tighten the bolts and nuts in several passes.
Torque: 30 N·m (306 kgf·cm, 22 ft·lbf)
(c) Connect the 2 vacuum hoses to the intake manifold.
(d) Connect the 2 water hoses to the throttle body.

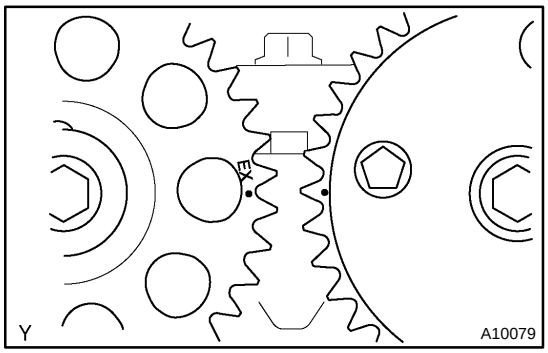

56. INSTALL CHAIN SUB–ASSY

(a) Set No. 1 cylinder to TDC/compression.
(1) Turn the hexagonal wrench head portion of the camshafts, and align the point marks of the camshaft timing sprockets.

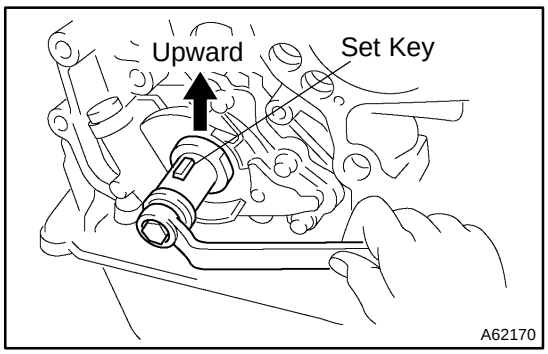

(2) Using a crankshaft pulley bolt, turn the crankshaft and set the set key on the crankshaft upward.

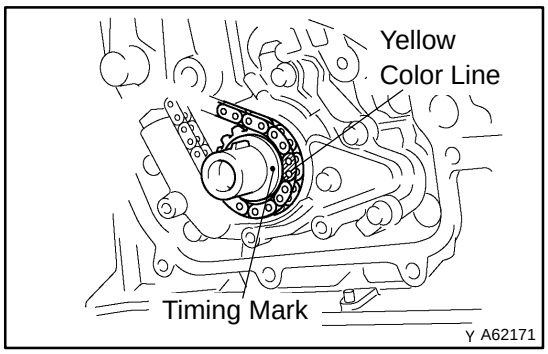

(b) Install the timing chain on the crankshaft timing sprocket with the yellow color link aligned with the timing mark on the crankshaft timing sprocket.

HINT:

Three yellow color links are on the chain.

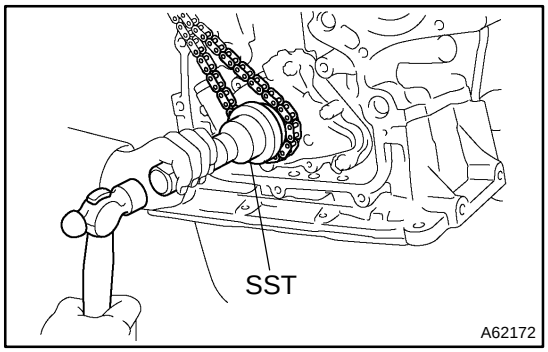

(c) Using SST, install the crankshaft timing sprocket.
SST 09223–22010

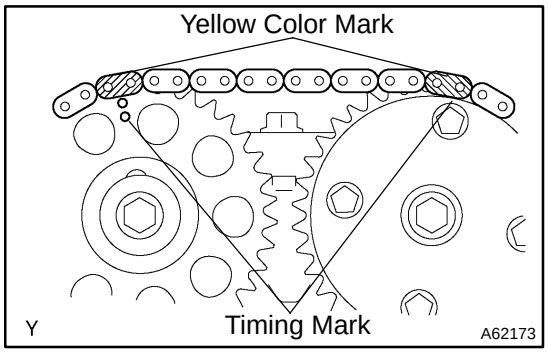

(d) Install the timing chain on the camshaft timing sprockets with the yellow color links aligned with the timing marks on the camshaft timing sprockets.

57. INSTALL CHAIN VIBRATION DAMPER NO.1

(a) Install the chain vibration damper with the 2 bolts.
Torque: 9.0 N·m (92 kgf·cm, 80 in.·lbf)

58. INSTALL CHAIN TENSIONER SLIPPER

(a) Install the chain tensioner slipper with the bolt.
Torque: 19 N·m (194 kgf·cm, 14 ft·lbf)

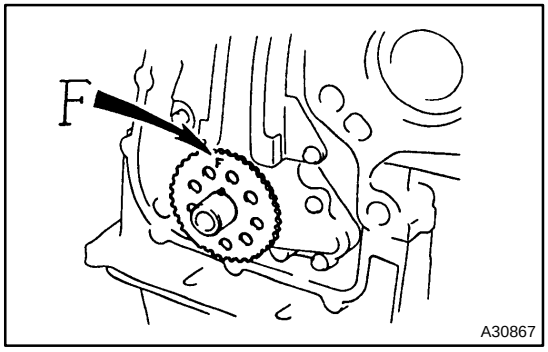

59. INSTALL CRANKSHAFT POSITION SENSOR PLATE NO.1

(a) Install the plate with the ”F” mark facing forward.

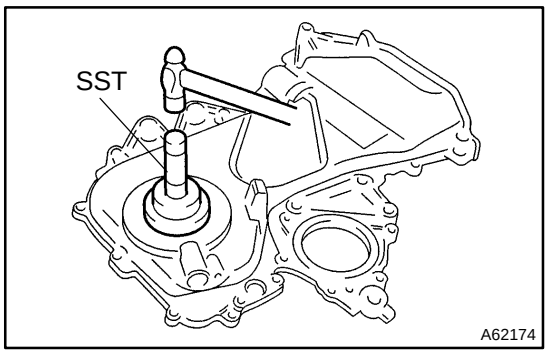

60. INSTALL TIMING GEAR COVER OIL SEAL

(a) Apply MP grease to a new oil seal lip.

(b) Using SST, tap in the oil seal until its surface is flush with the timing chain cover edge.

SST 09223–22010

NOTICE:

Keep the lip off foreign materials.

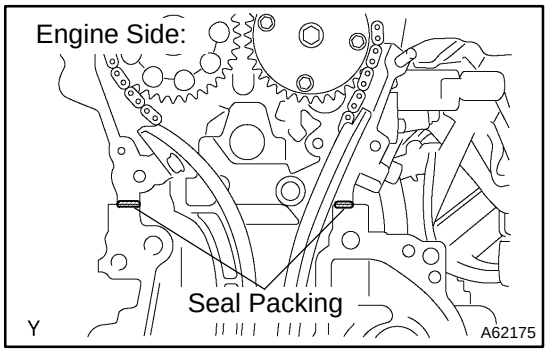

61. INSTALL TIMING CHAIN OR BELT COVER SUB–ASSY

(a) Remove any old packing material from the contact surface.

(b) Apply seal packing in the shape of bead (Diameter 3.5 mm – 4.5 mm (0.1379 – 0.177 in.)) consequently as shown in the illustration.

Seal packing:

Water pump part part No. 08826–00100 or equivalent

Other part part No. 08826–00080 or equivalent.

NOTICE:

- **Remove any oil from the contact surface.**
- **Install the oil pan within 3 minutes after applying seal packing.**
- **Do not put into engine oil within 2 hours after installing.**

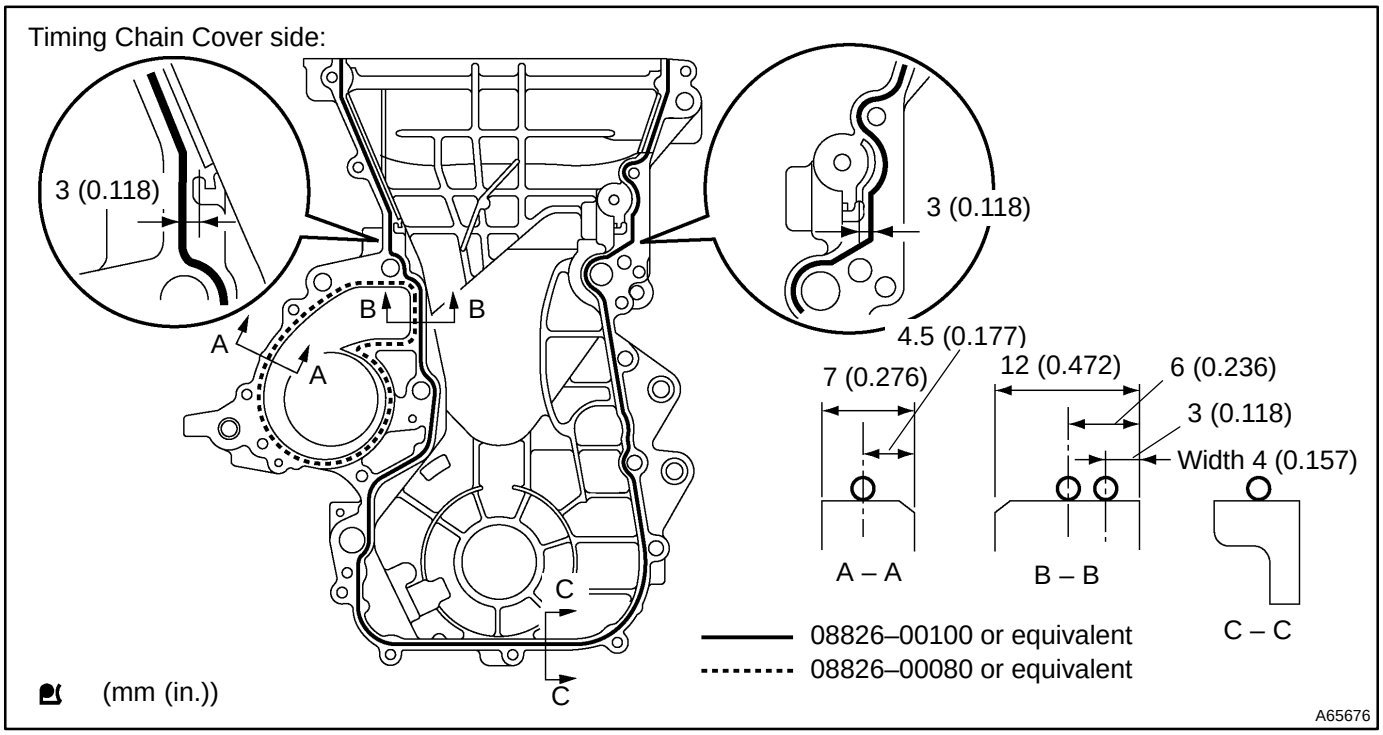

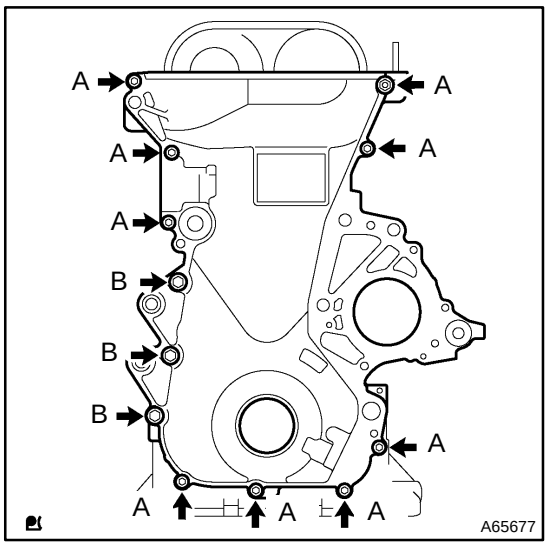

(c) Install the timing chain cover with the 11 bolts and nut.
Torque:
A 13 N·m (133 kgf·cm, 10 ft·lbf)
B 19 N·m (194 kgf·cm, 14 ft·lbf)

(d) Using a torx wrench socket (E8), install the stud bolt.
Torque: 9.5 N·m (97 kgf·cm, 84 in.·lbf)

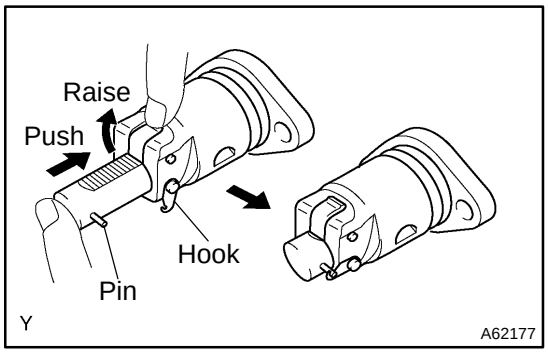

62. INSTALL CHAIN TENSIONER ASSY NO.1

(a) Check the O–ring is clean, and set the hook as shown in the illustration.

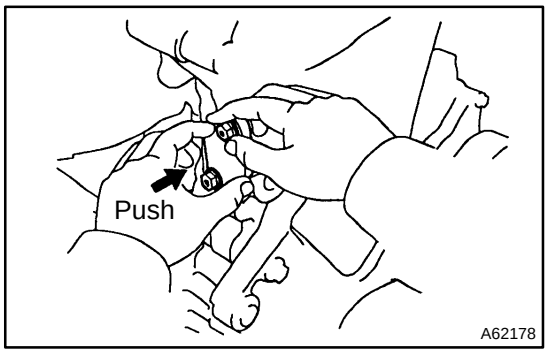

(b) Apply engine oil to the chain tensioner and install it withe 2 nuts.
Torque: 9.0 N·m (92 kgf·cm, 80 in.·lbf)

NOTICE:
When installing the tensioner, set the hook again if the hook release the plunger.

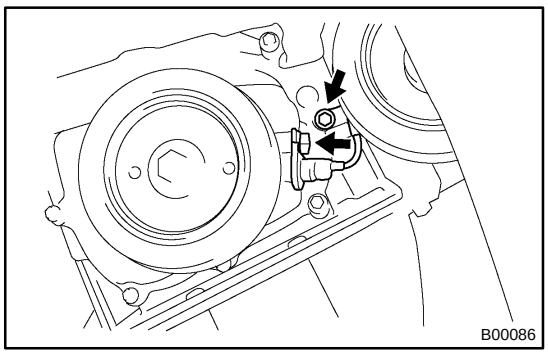

63. INSTALL CRANK POSITION SENSOR

(a) Install the crank position sensor with the 2 bolts.
Torque: 9.0 N·m (92 kgf·cm, 80 in.·lbf)

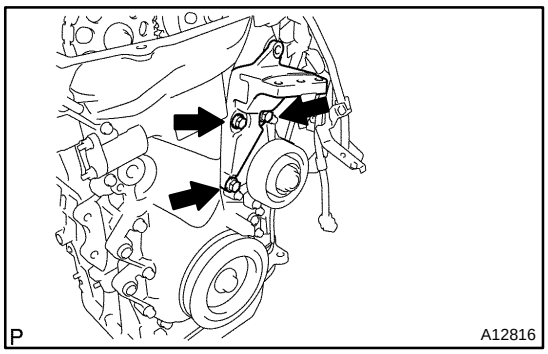

64. INSTALL TRANSVERSE ENGINE ENGINE MOUNTING BRACKET

(a) Install the transverse engine engine mounting bracket with the 3 bolts.
Torque: 47 N·m (479 kgf·cm, 35 ft·lbf)

65. INSTALL WATER PUMP ASSY (See page 16–7)

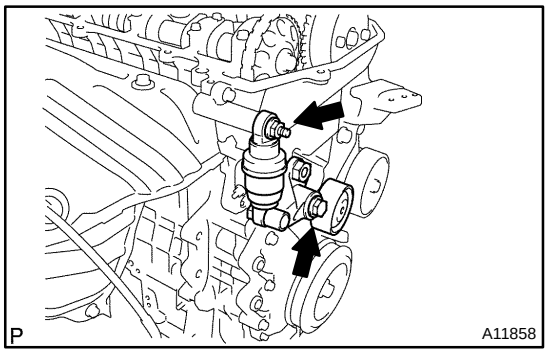

66. INSTALL V–RIBBED BELT TENSIONER ASSY

(a) Install the V–ribbed belt tensioner with the nut and bolt.
Torque:
Nut 29 N·m (296 kgf·cm, 21 ft·lbf)
Bolt 69 N·m (704 kgf·cm, 51 ft·lbf)

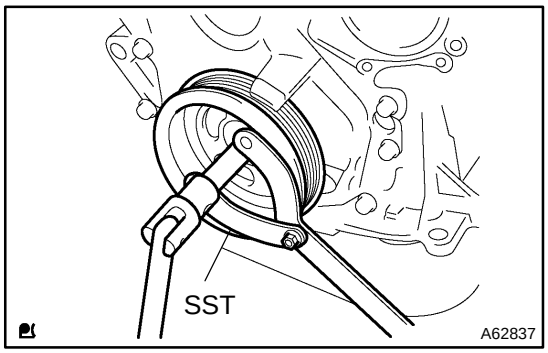

67. INSTALL CRANKSHAFT PULLEY

(a) Align the pulley set key with the key groove of the pulley, and slide on the pulley.

(b) Using SST, install the crankshaft pulley bolt.
SST 09960–10010 (09962–01000, 09963–01000)
Torque: 138 N·m (1,407 kgf·cm, 102 ft·lbf)

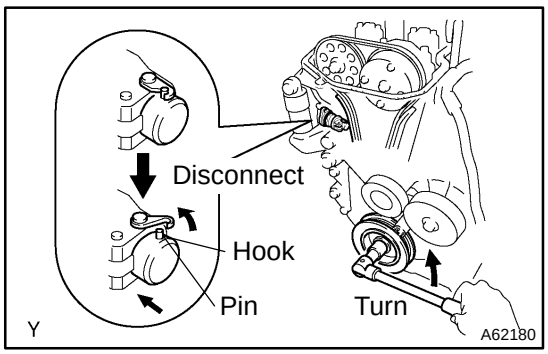

(c) Turn the crankshaft counterclockwise, and disconnect the plunger knock pin form the hook.

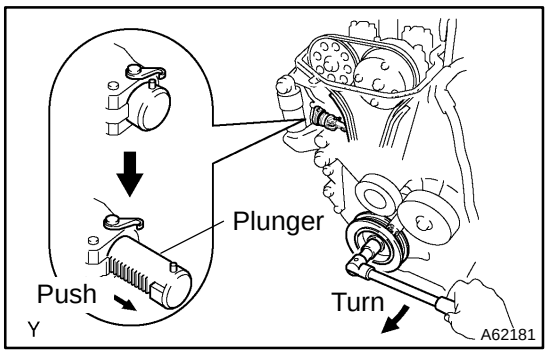

(d) Turn the crankshaft clockwise, and check that the slipper is pushed by the plunger.

HINT:

If the plunger does not spring out, press the slipper into the chain tensioner with a screwdriver so that the hook is released from the knock pin and the plunger springs out.

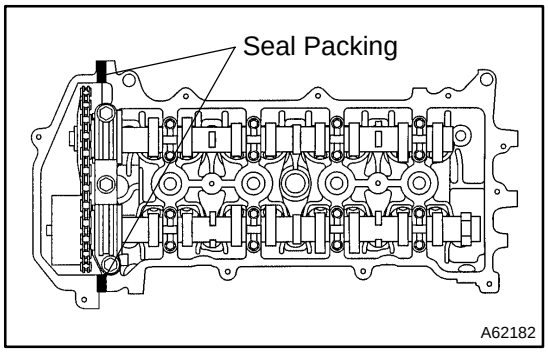

68. INSTALL CYLINDER HEAD COVER SUB–ASSY

(a) Remove any old pacing (FIPG) material.

(b) Apply seal packing to 2 locations as shown in the illustration.

Seal packing: Part No. 08826–00080 or equivalent

NOTICE:

- **Remove any oil from the contact surface.**
- **Install the cylinder head cover within 3 minutes after applying seal packing.**
- **Do not put into engine oil 2 hours after installing.**

(c) Install the cylinder head cover and 3 cable brackets with the 9 bolts, 2 seal washers and 2 nuts. Uniformly tighten the bolts and nuts, in the several passes.

Torque:

A 11 N·m (112 kgf·cm, 8 ft·lbf)

B 9.0 N·m (92 kgf·cm, 80 in.·lbf)

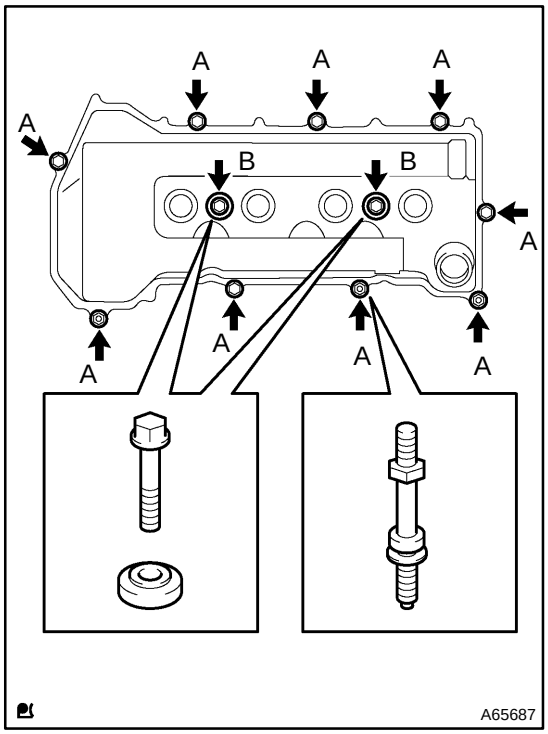

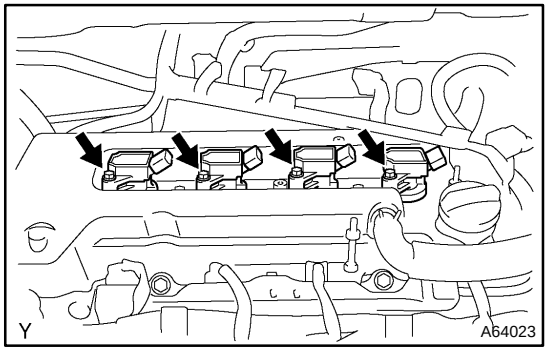

69. INSTALL IGNITION COIL ASSY

(a) Install the 4 ignition coils with the 4 bolts.

Torque: 9.0 N·m (92 kgf·cm, 80 in.·lbf)

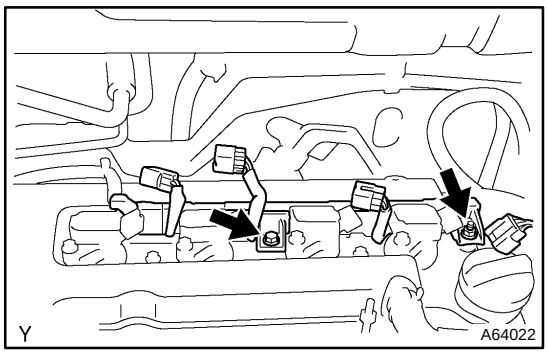

70. INSTALL ENGINE WIRE

(a) Install the engine wire with the bolt and nut.
Torque: 9.0 N·m (92 kgf·cm, 80 in.·lbf)

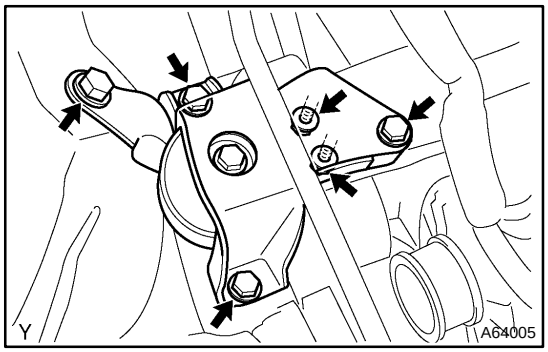

71. INSTALL ENGINE MOUNTING INSULATOR SUB–ASSY RH

(a) Install the engine mounting insulator with the 4 bolts and 2 nuts.
Torque: 52 N·m (530 kgf·cm, 38 ft·lbf)

72. INSTALL EXHAUST PIPE ASSY FRONT (See page 15–4)
73. INSTALL VANE PUMP ASSY (See page 51–8)
74. INSTALL GENERATOR ASSY (See page 19–15)

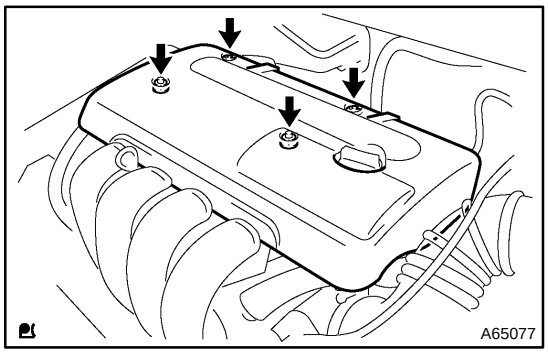

75. INSTALL CYLINDER HEAD COVER NO.2

(a) Install the cylinder head cover with the 2 nuts and 2 clips.
Torque: 7.0 N·m (71 kgf·cm, 62 in.·lbf)

76. INSTALL FRONT WHEEL RH
Torque: 103 N·m (1,050 kgf·cm, 76 ft·lbf)
77. ADD COOLANT (See page 16–6)
78. INSPECT COMPRESSION (See page 14–1)
SST 09992–00500
79. INSPECT CO/HC (See page 14–1)
80. INSPECT IGNITION TIMING (See page 14–1)
SST 09843–18040
81. CHECK ENGINE COOLANT LEAK (See page 16–6)
82. CHECK ENGINE OIL LEAK

CYLINDER HEAD GASKET (2ZZ–GE)

140RE–01

COMPONENTS

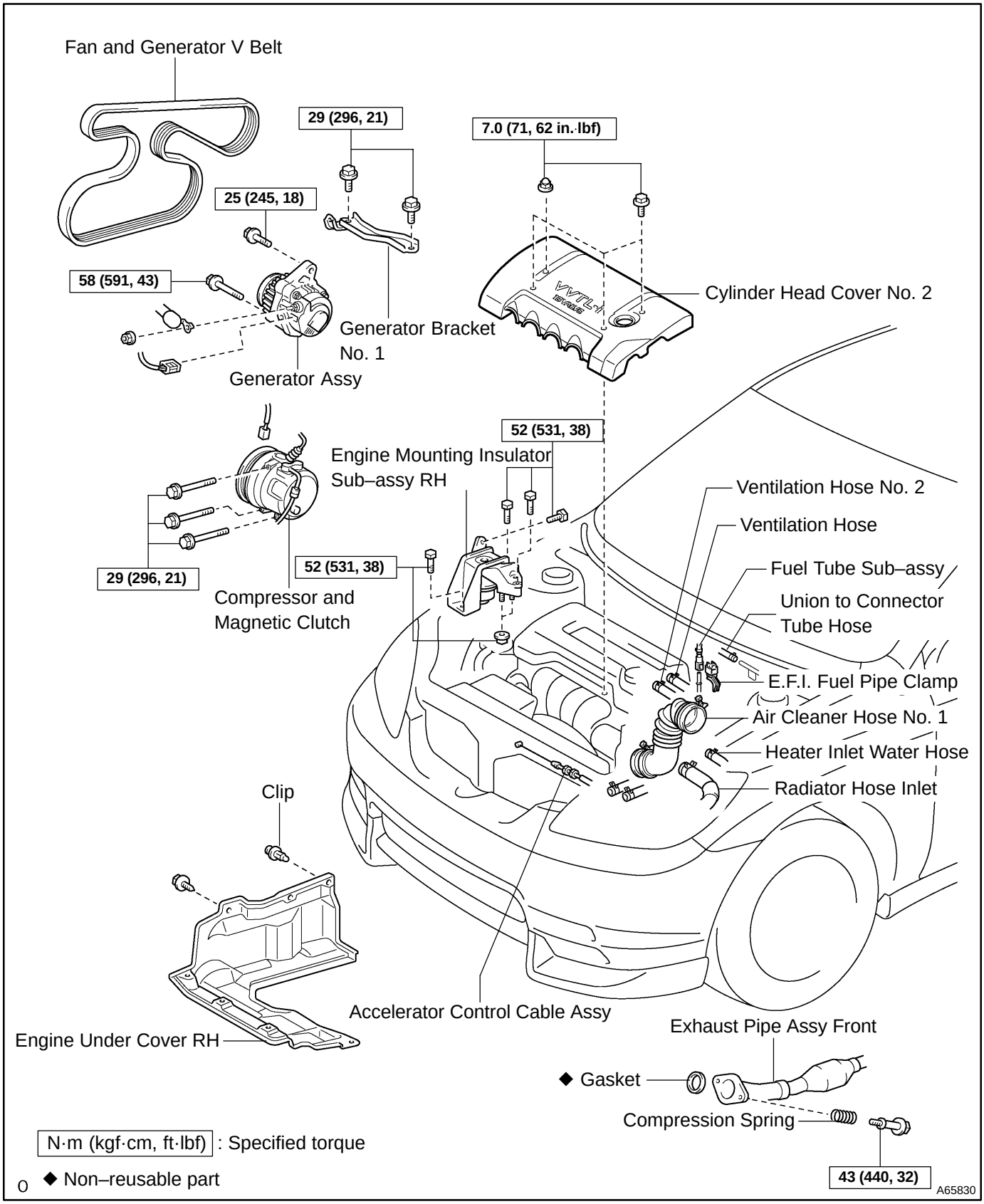

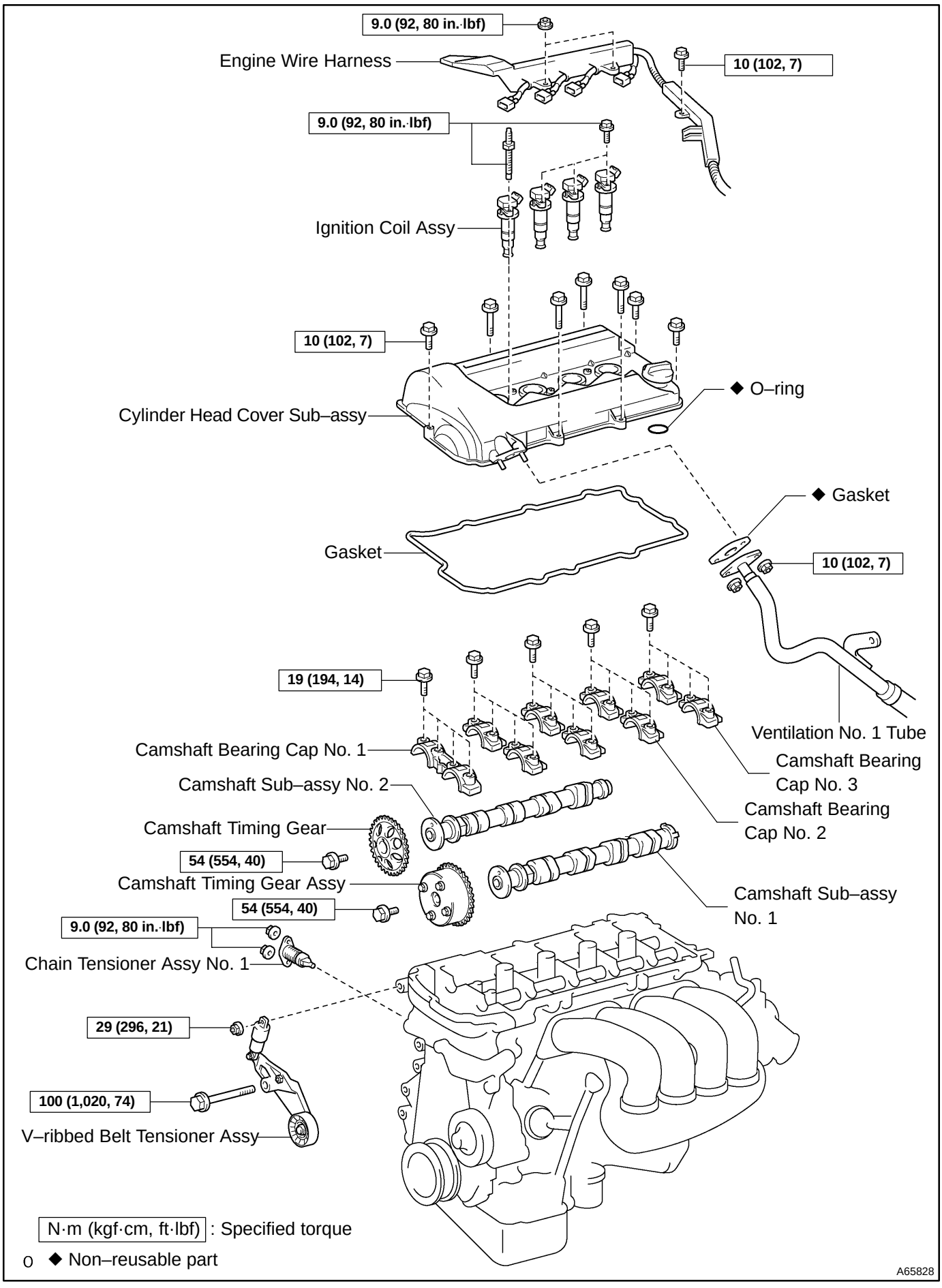
9.0 (92, 80 in.·lbf)
Engine Wire Harness
10 (102, 7)
9.0 (92, 80 in.·lbf)
Ignition Coil Assy
10 (102, 7)
◆ O–ring
Cylinder Head Cover Sub–assy
◆ Gasket
Gasket
10 (102, 7)
19 (194, 14)
Ventilation No. 1 Tube
Camshaft Bearing Cap No. 1
Camshaft Bearing Cap No. 3
Camshaft Sub–assy No. 2
Camshaft Bearing Cap No. 2
Camshaft Timing Gear
54 (554, 40)
Camshaft Timing Gear Assy
Camshaft Sub–assy No. 1
54 (554, 40)
9.0 (92, 80 in.·lbf)
Chain Tensioner Assy No. 1
29 (296, 21)
100 (1,020, 74)
V–ribbed Belt Tensioner Assy
N·m (kgf·cm, ft·lbf) : Specified torque
◆ Non–reusable part
A65828

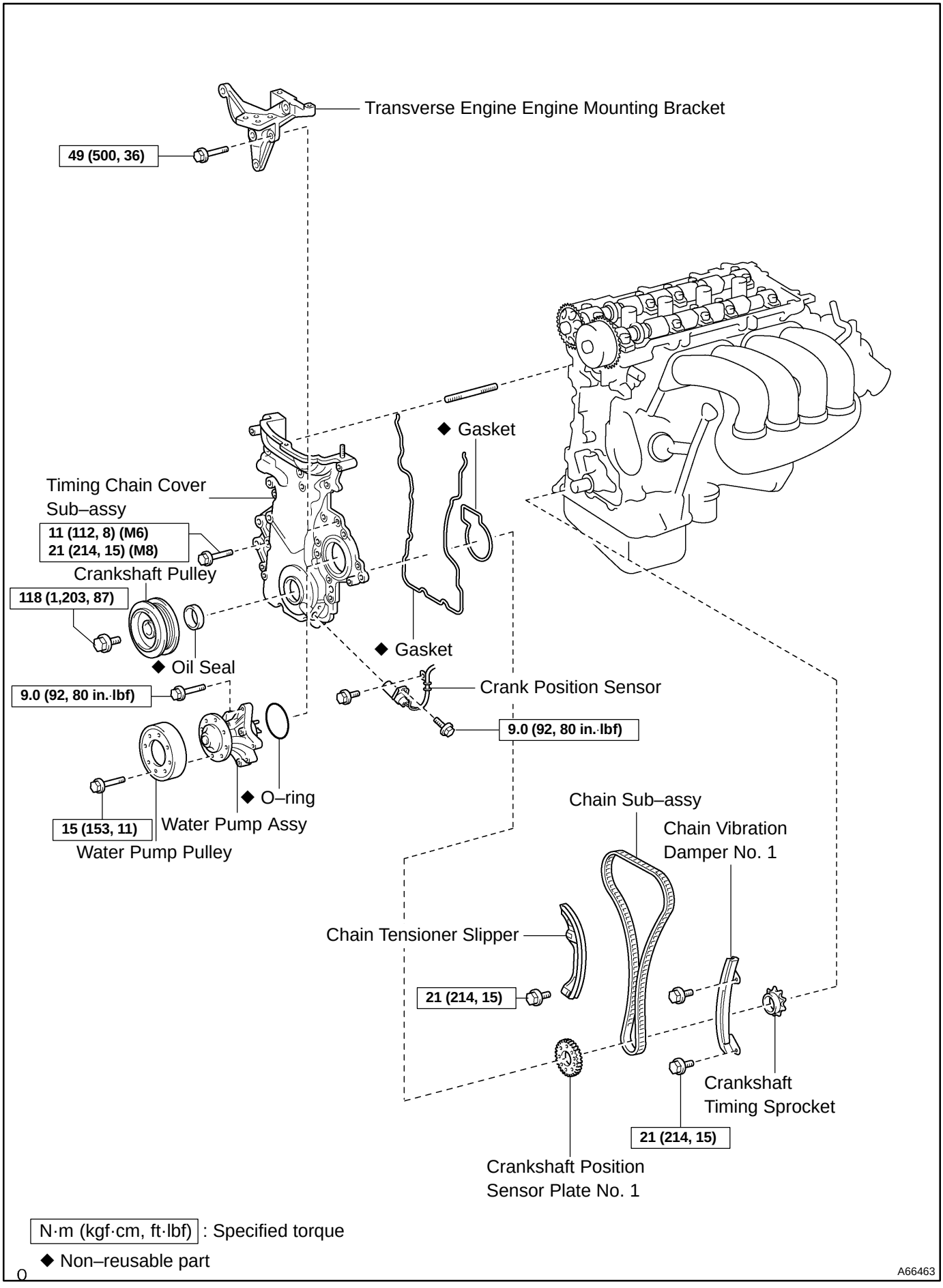
Transverse Engine Engine Mounting Bracket
49 (500, 36)
◆ Gasket
Timing Chain Cover Sub–assy
11 (112, 8) (M6)
21 (214, 15) (M8)
Crankshaft Pulley
118 (1,203, 87)
◆ Oil Seal
◆ Gasket
9.0 (92, 80 in.·lbf)
Crank Position Sensor
9.0 (92, 80 in.·lbf)
◆ O–ring
15 (153, 11)
Water Pump Assy
Water Pump Pulley
Chain Sub–assy
Chain Vibration Damper No. 1
Chain Tensioner Slipper
21 (214, 15)
Crankshaft Timing Sprocket
21 (214, 15)
Crankshaft Position Sensor Plate No. 1
N·m (kgf·cm, ft·lbf) : Specified torque
◆ Non–reusable part
A66463

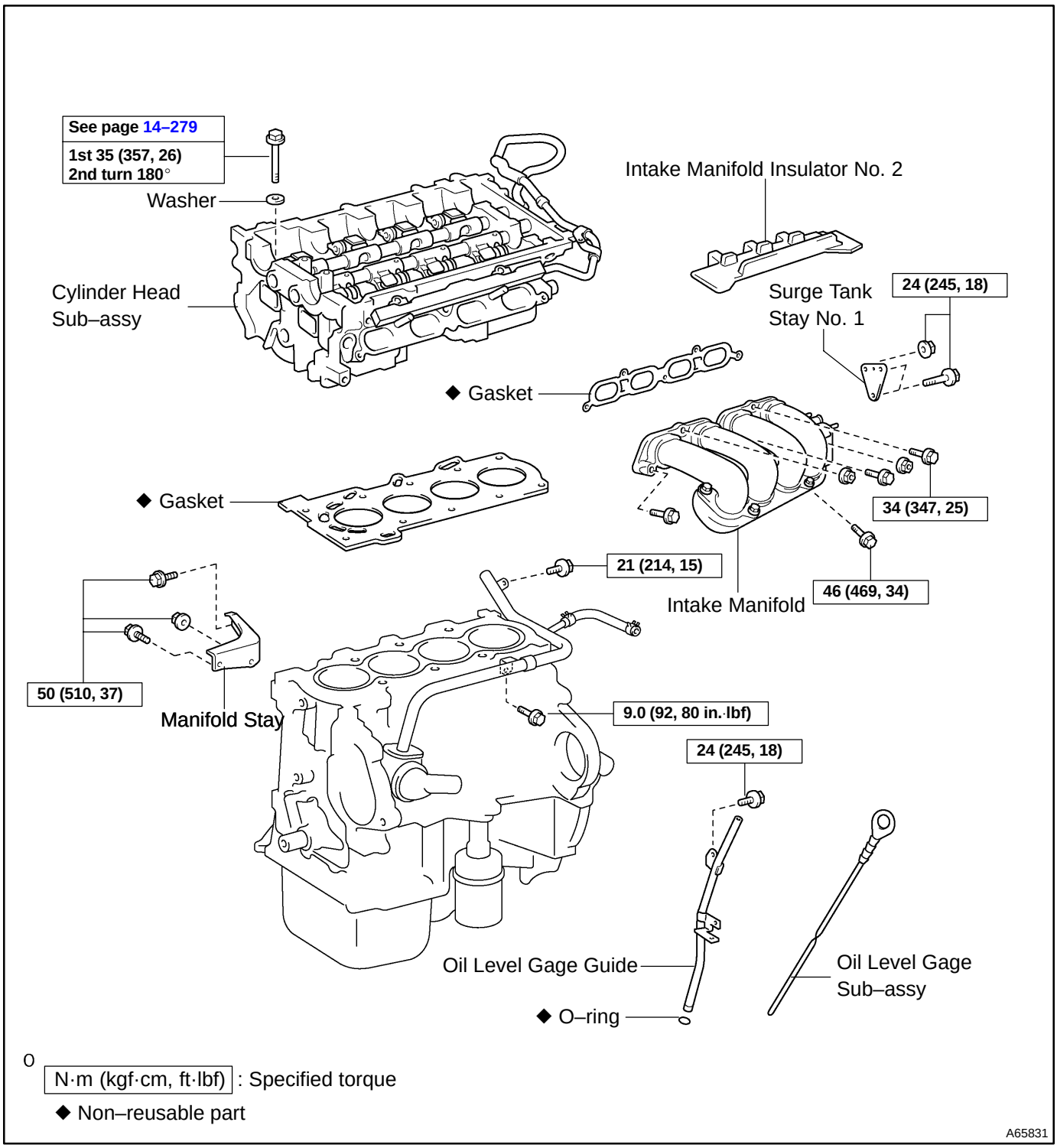
See page 14–279
1st 35 (357, 26)
2nd turn 180°
Washer
Cylinder Head Sub–assy
Intake Manifold Insulator No. 2
Surge Tank Stay No. 1
24 (245, 18)
◆ Gasket
◆ Gasket
34 (347, 25)
21 (214, 15)
46 (469, 34)
Intake Manifold
50 (510, 37)
Manifold Stay
9.0 (92, 80 in.·lbf)
24 (245, 18)
Oil Level Gage Guide
◆ O–ring
Oil Level Gage Sub–assy
O N·m (kgf·cm, ft·lbf) : Specified torque
◆ Non–reusable part
A65831

140RF–01

REPLACEMENT

1. WORK FOR PREVENTING GASOLINE FROM SPILLING OUT (See page 11–1)

2. REMOVE FRONT WHEEL RH

3. REMOVE ENGINE UNDER COVER RH

4. DRAIN COOLANT(See page 16–6)

5. REMOVE CYLINDER HEAD COVER NO.2

(a) Remove the 3 bolts, the nut and the cylinder head cover No. 2.

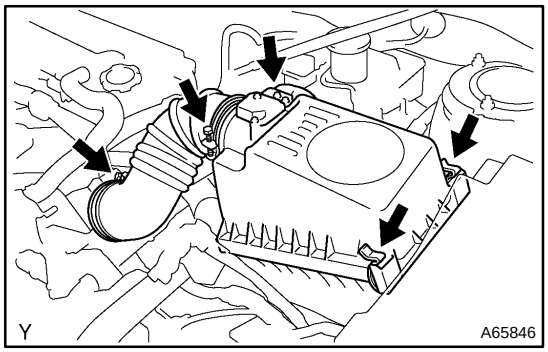

6. REMOVE AIR CLEANER ASSEMBLY WITH HOSE

(a) Disconnect the MAF meter connector.

(b) Place match marks on the vacuum hoses.

(c) Disconnect the 5 vacuum hoses from the air cleaner cap.

(d) Disconnect the 2 clamps, and disconnect the air cleaner cap from the air cleaner case.

(e) Loosen the hose clamp bolt, and disconnect the air cleaner hose from the throttle body.

(f) Remove the air cleaner assembly with hose.

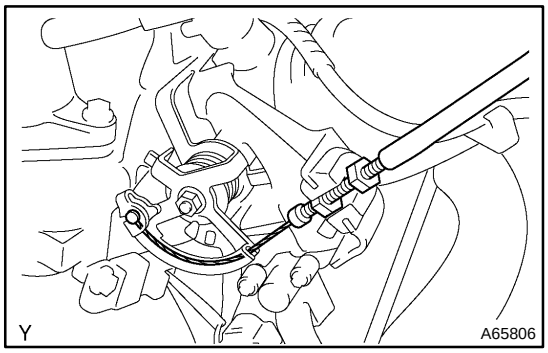

7. DISCONNECT ACCELERATOR CONTROL CABLE ASSY

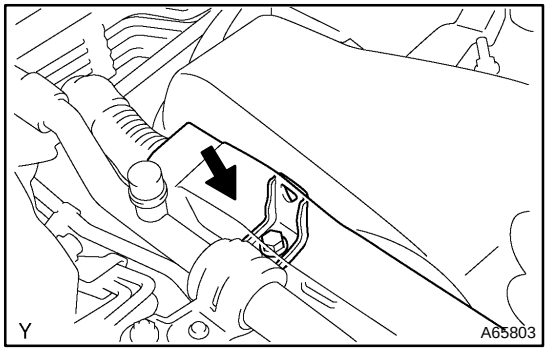

8. REMOVE WIRE HARNESS CLAMP

(a) Disconnect engine wire harness.

(b) Remove the bolt and wiring harness clamp bracket.

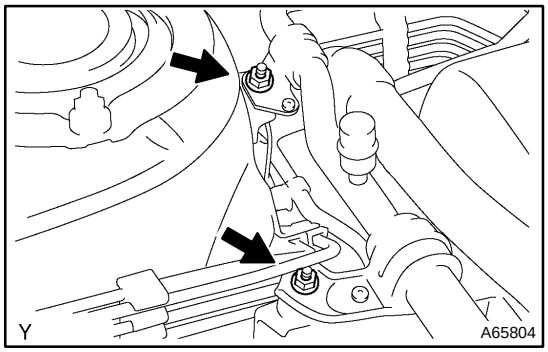

9. DISCONNECT SUCTION HOSE SUB–ASSY

(a) Remove the 2 nuts installing the suction hose sub–assy.

(b) Disconnect the suction hose sub–assy.

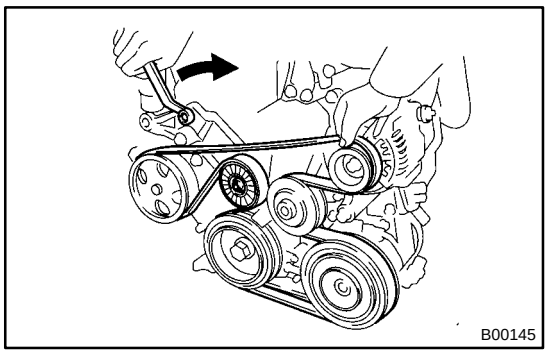

10. REMOVE FAN AND GENERATOR V BELT

(a) Turn the drive belt tensioner slowly clockwise and loosen it. Then, remove the drive belt and put back the drive belt tensioner little by little and fix it quietly.

11. REMOVE EFI FUEL PIPE CLAMP (See page 11–1)

12. DISCONNECT FUEL TUBE SUB–ASSY(See page 11–1)

13. SEPARATE RADIATOR HOSE INLET

(a) Disconnect the radiator hose inlet from the radiator.

14. DISCONNECT HEATER INLET WATER HOSE

(a) Disconnect the heater inlet water hose from the air conditioner tube.

15. DISCONNECT WATER BY–PASS HOSE NO.2

(a) Disconnect the water by–pass hose No. 2 from the throttle body.

16. DISCONNECT WATER BY–PASS HOSE NO.3

(a) Disconnect the water by–pass hose No. 3 from the throttle body.

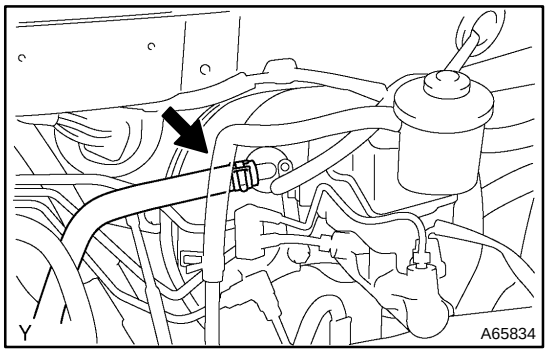

17. DISCONNECT UNION TO CONNECTOR TUBE HOSE

(a) Disconnect the union to check valve hose from the brake booster.

18. REMOVE GENERATOR BRACKET NO.1 (See page 19–15)

19. REMOVE GENERATOR ASSY (See page 19–15)

20. SEPARATE COMPRESSOR AND MAGNETIC CLUTCH (W/ AIR CONDITIONER) (See page 55–34)

HINT:

Hung up the hoses instead of detaching.

21. DISCONNECT EXHAUST PIPE ASSY FRONT

(a) Remove the 2 bolts and 2 nuts compression springs installing the front side of exhaust pipe.

(b) Remove the gasket.

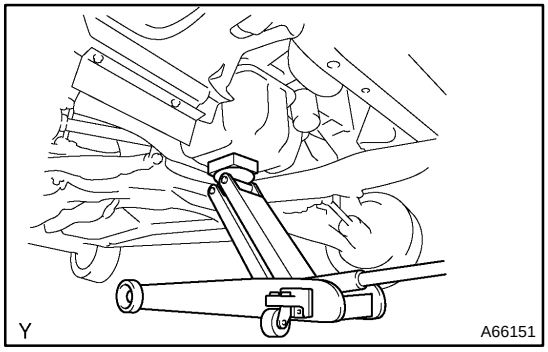

22. REMOVE ENGINE MOUNTING INSULATOR SUB–ASSY RH

(a) Set the jack to the engine.

HINT:

Place a wooden block between the jack and engine.

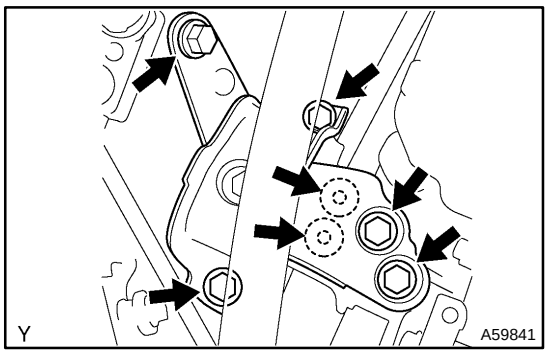

(b) Remove the 5 bolts, 2 nuts and engine mounting insulator sub–assy RH.

23. DISCONNECT ENGINE WIRE

(a) Disconnect the ignition coil connectors, oil control valve connector and crankshaft position sensor connector.

(b) Remove the bolt and nut for the earth and put the engine wiring side.

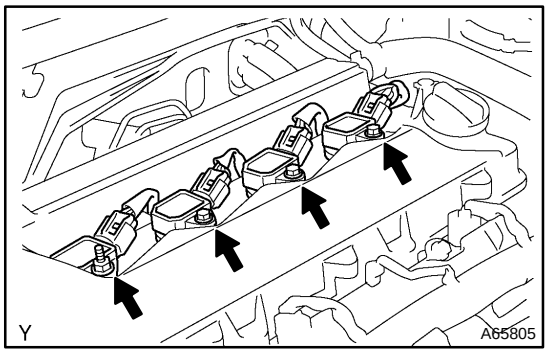

24. INSTALL IGNITION COIL ASSY

(a) Remove the 4 bolts and the 4 ignition coils.

25. DISCONNECT VENTILATION HOSE

(a) Disconnect the ventilation hose from the cylinder head cover.

26. DISCONNECT VENTILATION HOSE NO.2

(a) Disconnect the ventilation hose from the cylinder head cover.

27. REMOVE CYLINDER HEAD COVER SUB–ASSY

(a) Disconnect the fuel hose clamp and 2 PCV hoses from the cylinder head cover.

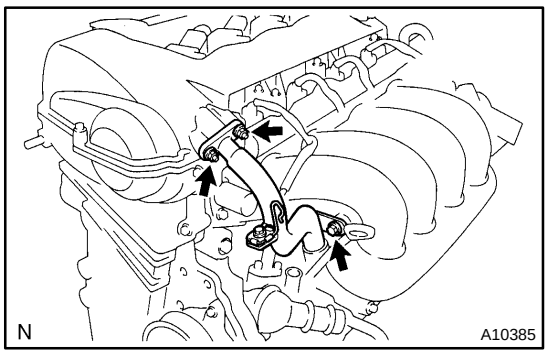

(b) Remove the 2 nuts, bolt and disconnect the No. 3 ventilation hose from the No. 1 ventilation pipe.

(c) Disconnect the ventilation No. 1 tube and gasket.

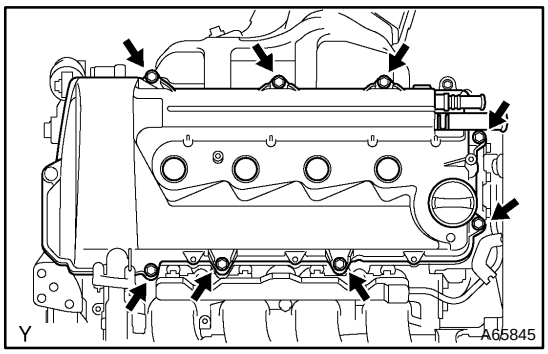

(d) Remove the 8 bolts, wire harness protector, cylinder head cover and gasket.
(e) Remove the O–ring from the cylinder head cover.

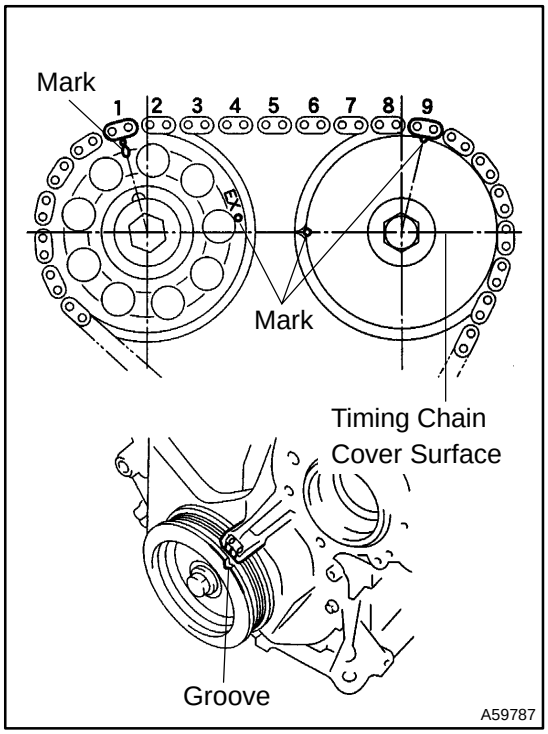

28. SET NO.1 CYLINDER TO TDC/COMPRESSION

(a) Turn the crankshaft pulley, and align its groove with timing mark ”0” of the timing chain cover.
(b) Check that the point marks of the camshaft timing sprocket and VVT timing sprocket are in straight line on the timing chain cover surface as shown in the illustration.

HINT:
If not, turn the crankshaft 1 revolution (360°) and align the marks as above.

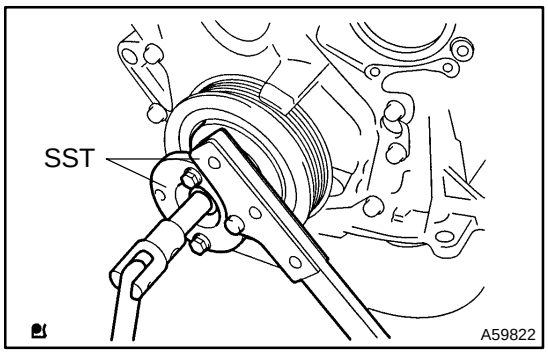

29. REMOVE CRANKSHAFT PULLEY

(a) Using SST, remove the pulley bolt.
SST 09213–70011 (09213–70020), 09330–00021

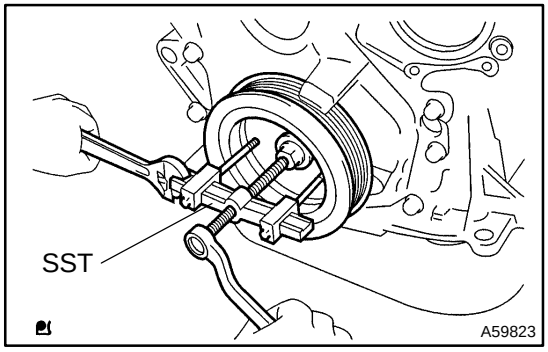

(b) Using SST, remove the crankshaft pulley.
SST 09950–50013 (09951–05010, 09952–05010, 09953–05020, 09954–05021, 09957–04010)

30. REMOVE V–RIBBED BELT TENSIONER ASSY

HINT:

Handle a jack up and down to remove the bolt.

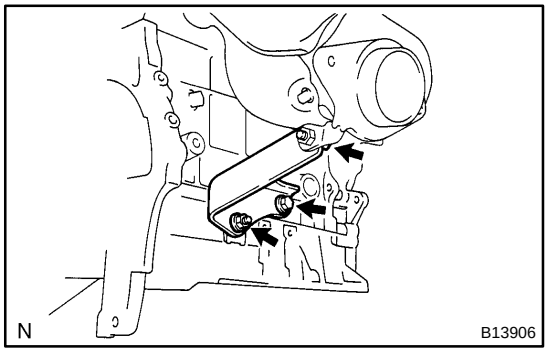

31. REMOVE MANIFOLD STAY

(a) Remove the 2 bolts, nut and exhaust manifold stay.

32. REMOVE EXHAUST MANIFOLD HEAT INSULATOR NO.1

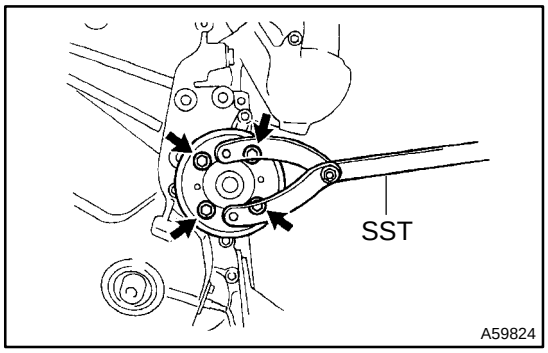

33. REMOVE WATER PUMP PULLEY

(a) Using SST, remove the water pump pulley.

SST 09960–10010

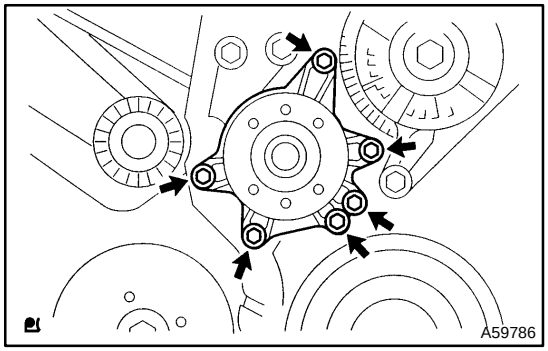

34. REMOVE WATER PUMP ASSY

(a) Remove the 6 bolts and water pump.

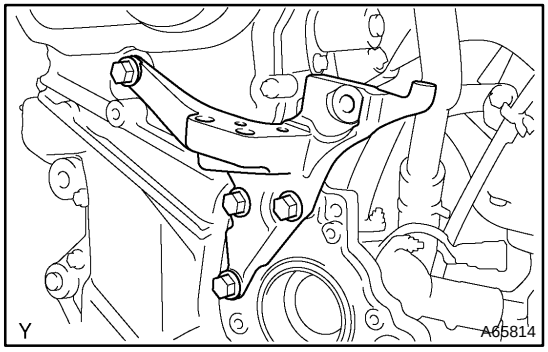

35. REMOVE TRANSVERSE ENGINE ENGINE MOUNTING BRACKET

(a) Remove the 4 bolts and the engine mounting bracket.

36. REMOVE CRANK POSITION SENSOR

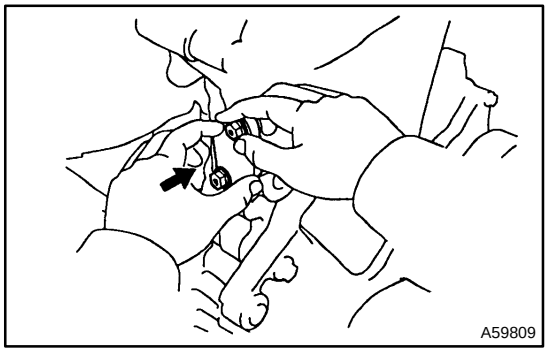

37. REMOVE CHAIN TENSIONER ASSY NO.1

(a) Remove the 2 nuts and the chain tensioner assy No. 1.

NOTICE:

Be sure not to revolve the crankshaft without the chain tensioner.

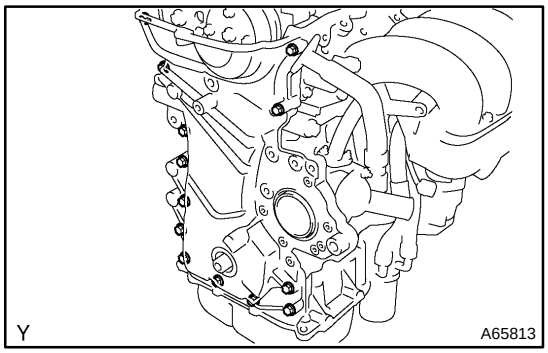

38. REMOVE TIMING CHAIN OR BELT COVER SUB–ASSY

(a) Remove the 12 bolts.

(b) Using a torx wrench socket (E8), remove the stud bolt.

(c) Remove the timing chain cover and 2 gaskets.

NOTICE:

Be careful no tot damage the contact surfaces of the timing chain cover, cylinder head and cylinder block.

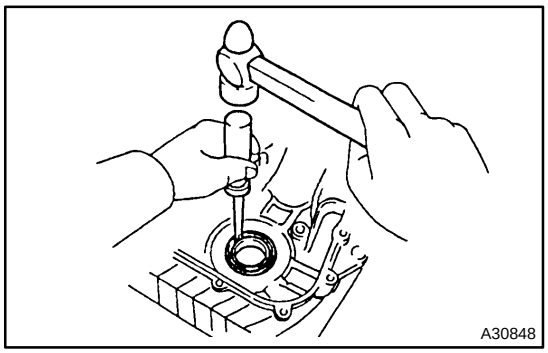

39. REMOVE TIMING GEAR COVER OIL SEAL

(a) Using a screwdriver, remove the oil seal.

40. REMOVE CRANKSHAFT POSITION SENSOR PLATE NO.1

41. REMOVE CHAIN TENSIONER SLIPPER

(a) Remove the bolt and the chain tensioner slipper.

42. REMOVE CHAIN VIBRATION DAMPER NO.1

(a) Remove the 2 bolts and chain vibration damper No. 1.

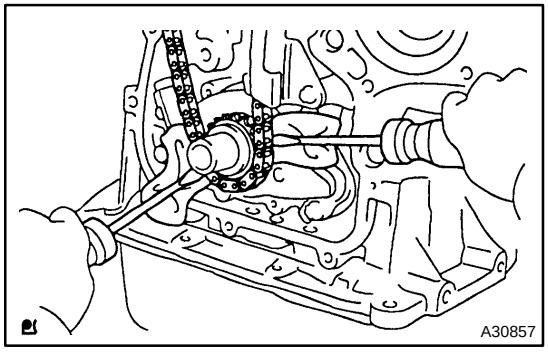

43. REMOVE CHAIN SUB–ASSY

(a) Remove the timing chain with the crankshaft timing gear plying screwdrivers as shown in the illustration.

NOTICE:

- **Put shop rag to protect the engine.**
- **In case of revolving the camshafts with the chain off the sprockets, turn the crankshaft 1/4 revolution for valves not to touch the pistons.**

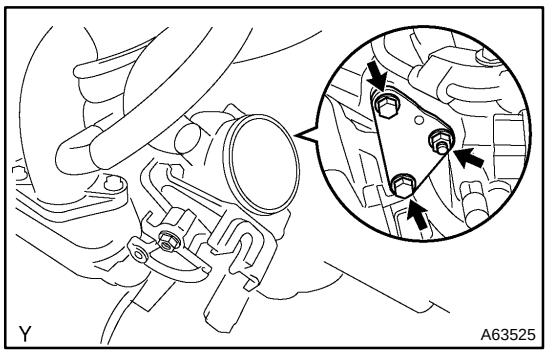

44. REMOVE SURGE TANK STAY NO.1

(a) Remove the 2 bolts, nut and surge tank stay No. 1.

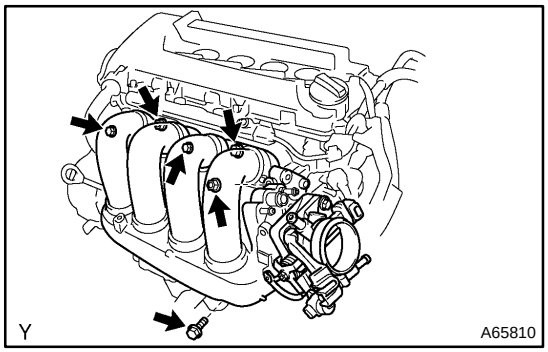

45. REMOVE INTAKE MANIFOLD

(a) Remove the 4 bolts, the 2 nuts, the intake manifold and the gasket.

46. REMOVE OIL LEVEL GAGE GUIDE

47. REMOVE OIL LEVEL GAGE SUB–ASSY

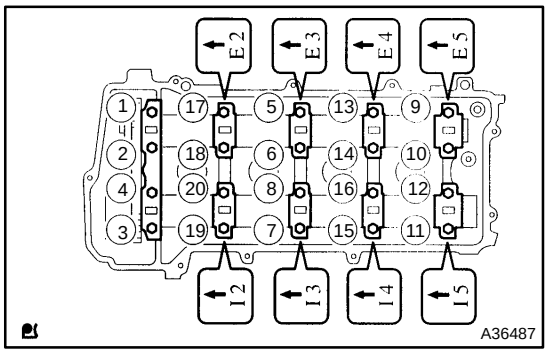

48. REMOVE CAMSHAFT

(a) Uniformly loosen and remove the 20 bearing cap bolts, in several passes, in the sequence shown, and remove the 9 bearing caps, of the intake and exhaust camshafts.

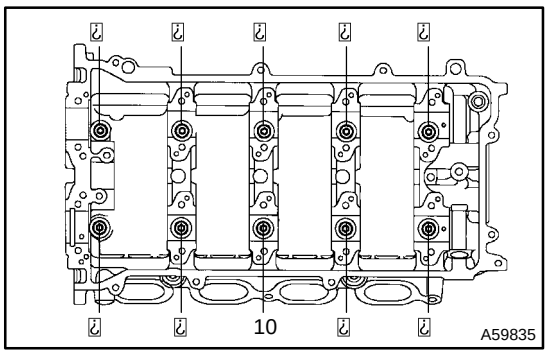

49. REMOVE CYLINDER HEAD SUB–ASSY

(a) Detach the water by–pass pipe from the cylinder head.

(b) Using a 10 mm bi–hexagon wrench, uniformly loosen and remove the 10 cylinder head bolts, in several passes, in the sequence shown. Remove the 10 cylinder head bolts and plate washers.

NOTICE:

- **Be careful not to drop washers into the cylinder head.**
- **Head warpage or cracking could result from removing bolts in and incorrect order.**

50. REMOVE CYLINDER HEAD GASKET

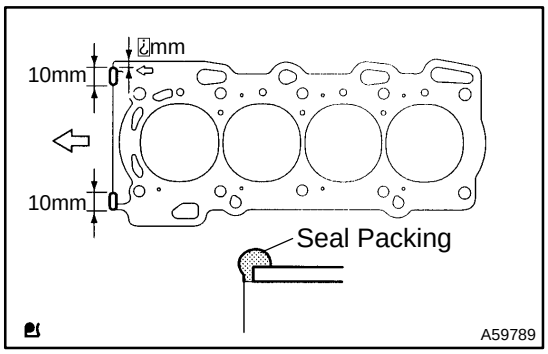

51. INSTALL CYLINDER HEAD GASKET

(a) Place a new cylinder head gasket on the cylinder block.

NOTICE:

- **Pay attention to the installation direction.**
- **Place the cylinder head quietly in order not to damage the gasket with the bottom part of the head.**

(b) Apply seal packing to the cylinder head gasket as shown in the illustration.

Seal packing:
Part No. 08826–00080 or equivalent

HINT:
avoid applying an excessive amount to the surface.

- Parts must be assembled with in 3 minutes of application. Otherwise the material must be removed and repplied.
- Immediately remove nozzle from the tube and reinstall cap.

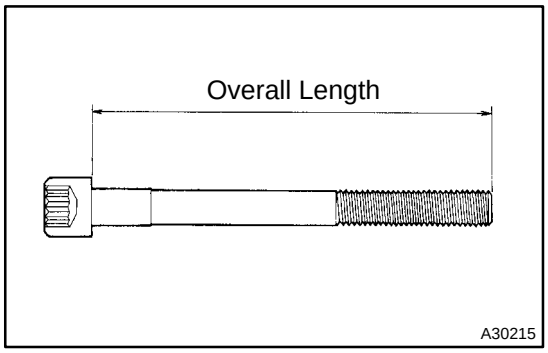

52. INSPECT CYLINDER HEAD SET BOLT

(a) Using vernier calipers, measure the length of head bolts from the seat to the end.

Standard bolt length:
146.0 – 148.2 mm (5.780–5.835 in.)
Maximum bolt length: 148.5 mm(5.846 in.)

(b) If the length surpasses the maximum, replace the bolt.

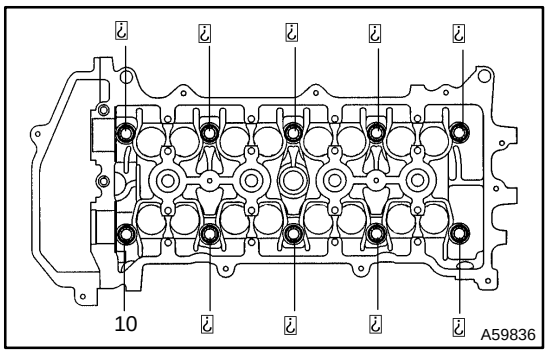

53. INSTALL CYLINDER HEAD SUB–ASSY

HINT:
The cylinder head bolts are tightened in 2 progressive steps.

(a) Apply a light coat of engine oil on the threads and under the heads of the cylinder head bolts.

(b) Using a 10 mm bi–hexagon wrench, install and uniformly tighten the 10 cylinder head bolts and plate washers, in several passes, in the sequence shown.

Torque: 35 N·m (357 kgf·cm, 26 ft·lbf)

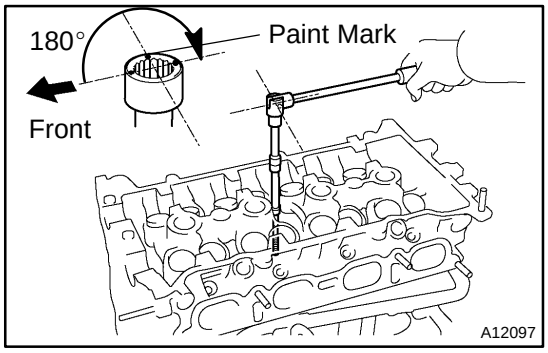

(c) Make the front of the cylinder head bolt with paint.

(d) Retighten the cylinder head bolts 180° in the numerical order shown.

(e) Check that the point marked bolts are moved at 90° angle.

(f) Install the water by–pass pipe.

Torque: 21 N·m (214 kgf·cm, 16 ft·lbf)

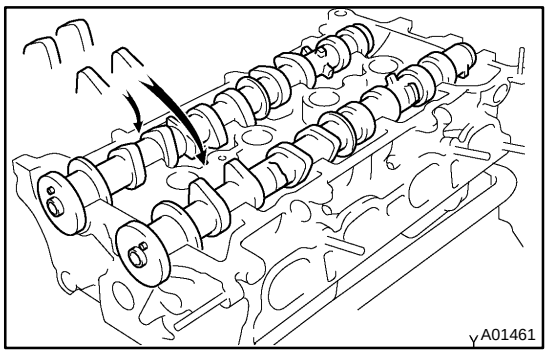

54. INSTALL CAMSHAFT

(a) Apply light coat of engine oil on the camshaft journals.

(b) Place the 2 camshafts on the cylinder head with the No. 1 cam lobes facing as shown the illustration.

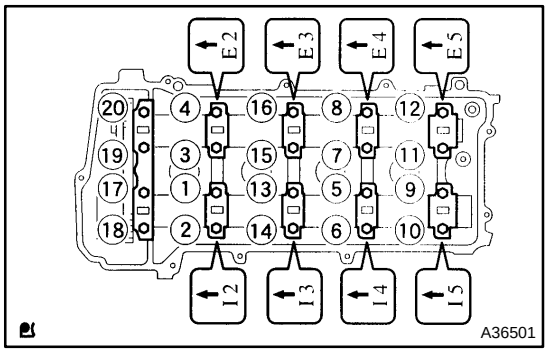

(c) Examine the front marks and numbers and tighten the bolts in the order shown in the illustration.
Torque: 19 N·m (194 kgf·cm, 14 ft·lbf)

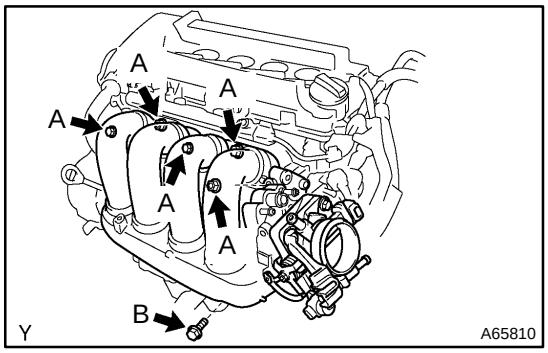

55. INSTALL INTAKE MANIFOLD

(a) Install a new gasket, the intake manifold with the 4 bolts and 2 nuts.
Torque:
A: 34 N·m (347 kgf·cm, 25 ft·lbf)
B: 46 N·m (469 kgf·cm, 34 ft·lbf)

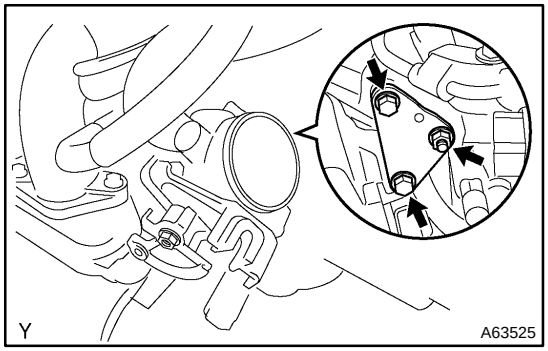

56. INSTALL SURGE TANK STAY NO.1

(a) Install the surge tank stay with the 2 bolts and nut.
Torque:24 N·m (245 kgf·cm, 18 ft·lbf)

57. INSTALL OIL LEVEL GAGE GUIDE

(a) Apply a light coat of engine oil to the new O–ring, install it to the oil level gage guide.

(b) Install the oil level gage and guide with the bolt.
Torque:24 N·m (245 kgf·cm, 18 ft·lbf)

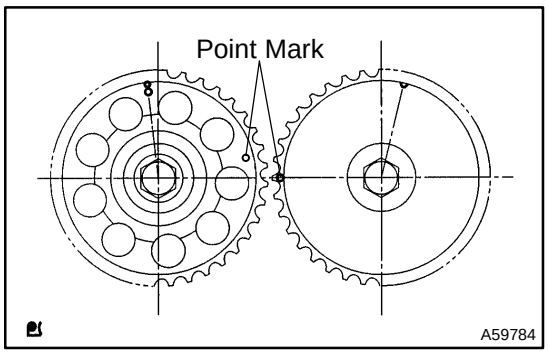

58. INSTALL CHAIN SUB–ASSY

(a) Set No. 1 cylinder to TDC/compression.

(1) Turn the hexagonal wrench head portion of the camshafts, and align the point marks of the camshaft timing sprockets.

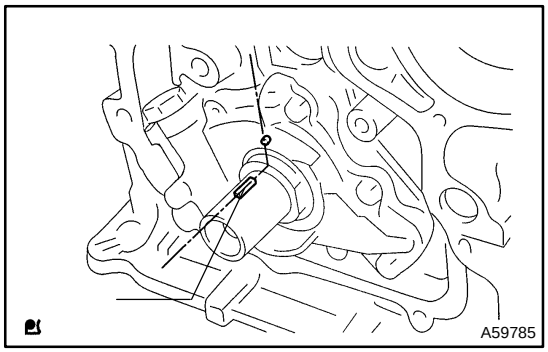

(2) Turn the crankshaft and set the set key on the crankshaft upward.

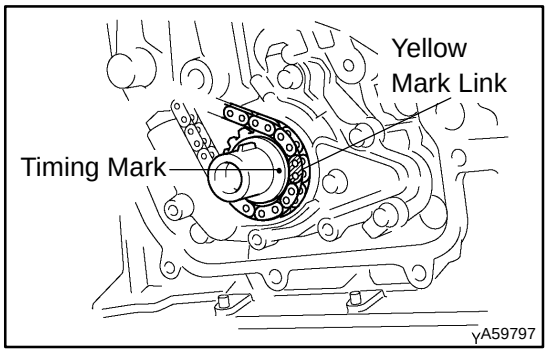

(b) Install the timing chain on the crankshaft timing sprocket with the yellow mark link aligned with the timing mark on the crankshaft timing sprocket.

HINT:

Three yellow color links are on the chain.

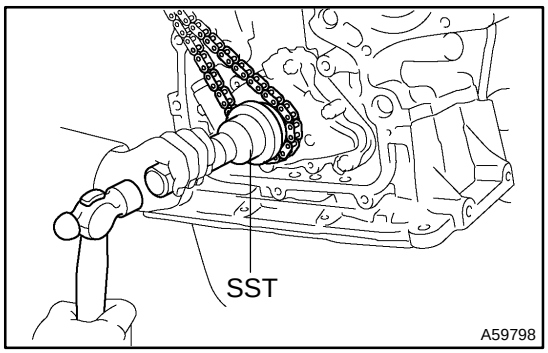

(c) Using a SST, install the sprocket.

SST 09223–22010

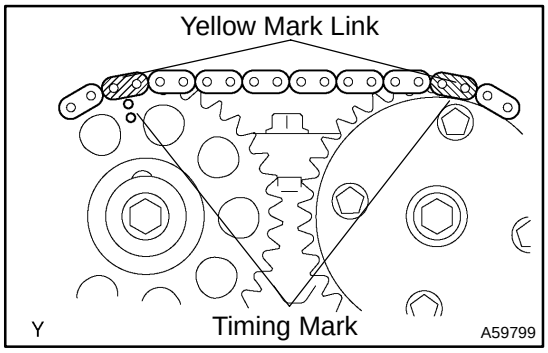

(d) Install the timing chain on the camshaft timing sprockets with the yellow mark links aligned with the timing marks on the camshaft timing sprockets.

59. INSTALL CHAIN VIBRATION DAMPER NO.1

(a) Install the chain vibration damper No, 1 with the 2 bolts.
Torque: 21 N·m (214 kgf·cm, 15 ft·lbf)

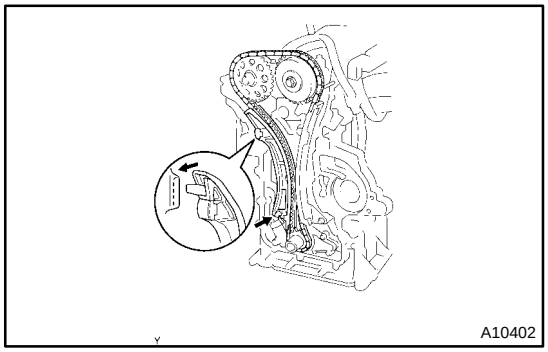

60. INSTALL CHAIN TENSIONER SLIPPER

(a) Install the chain tensioner slipper with the bolt.
Torque: 21 N·m (214 kgf·cm, 15 ft·lbf)

(b) Check that the chain tensioner slipper moves is caught on the cylinder head stopper.

NOTICE:
Do not turn the crankshaft.

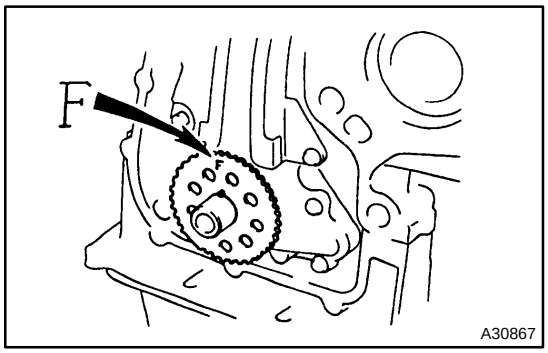

61. INSTALL CRANKSHAFT POSITION SENSOR PLATE NO.1

(a) Install the plate with the ”F” mark facing forward.

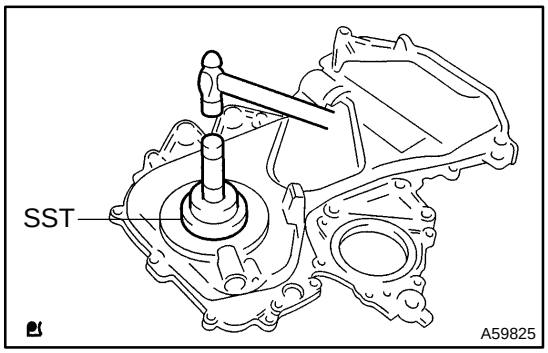

62. INSTALL TIMING GEAR COVER OIL SEAL

(a) Apply MP grease to the oil seal lip.

(b) Using SST and a hammer, tap in a new oil seal until its surface is flush with the timing chain cover edge.
SST 09223–22010

NOTICE:
Keep the lip off foreign materials.

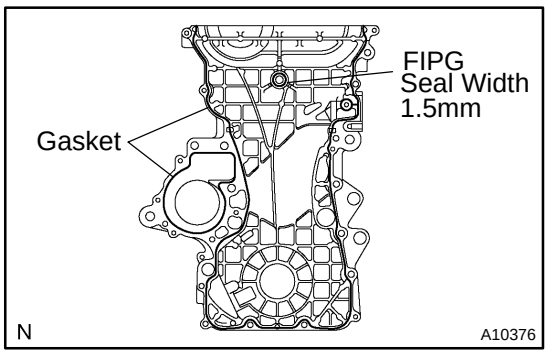

63. INSTALL TIMING CHAIN OR BELT COVER SUB–ASSY

(a) Remove any old packing (FIPG)material and be careful not to drop any oil on the contact surface of the timing chain cover, cylinder head and cylinder block.
- Using a razor blade and a gasket scraper, remove all the old packing (FIPG) material from the gasket surfaces and sealing grooves.
- Thoroughly clean all components to remove all the loose material.
- Using a non–residue solvent, clean both sealing surfaces.

(b) Apply seal packing to the timing chain cover an shown in the illustration.

Seal packing:

Part No. 08826–00100 or equivalent

- Install a nozzle that has been cut to a 1.5 mm opening.

HINT:

Avoid applying an excessive amount to the surface.

- Parts must be assembled within 3 minutes of application. Otherwise the material must be removed and reapplied.
- Immediately remove nozzle from the tube and reinstall cap.

(c) Install the 2 gaskets to the timing chain cover an shown in the illustration.

(d) Apply seal packing to 4 locations an shown in the illustration.

Seal packing:

Part No. 08826–00080 or equivalent

- Install a nozzle that has been cut to a 4 – 5 mm (0.16 – 0.20 in.)opening.

HINT:

Avoid applying an excessive amount to the surface.

- Parts must be assembled within 3 minutes of application. Otherwise the material must be removed and reapplied.
- Immediately remove nozzle from the tube and reinstall cap.

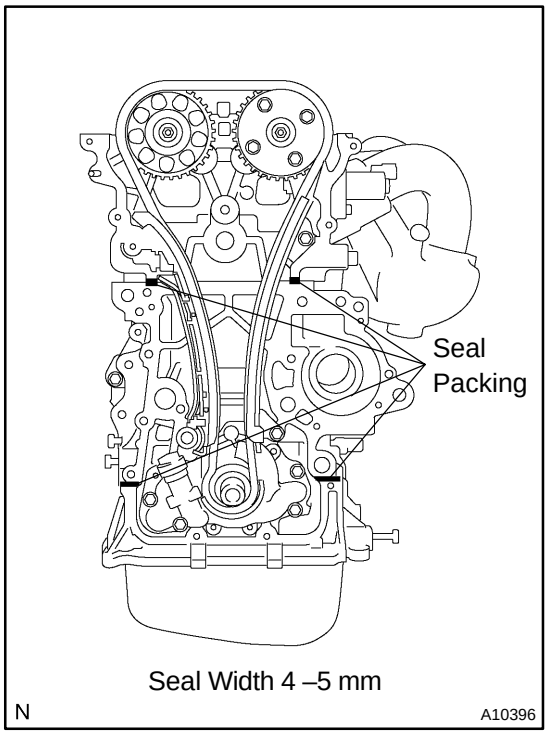

NOTICE:

Do not put into engine oil within 2 hours after installing.

(e) Install the timing chain cover, with the 12 bolts and nut.

Torque:

21 N·m (214 kgf·cm, 15 ft·lbf) (M8)

11 N·m (112 kgf·cm, 8 ft·lbf) (M6)

(f) Install the stud bolt.

Torque: 9.5 N·m (97 kgf·cm, 84 in.·lbf)

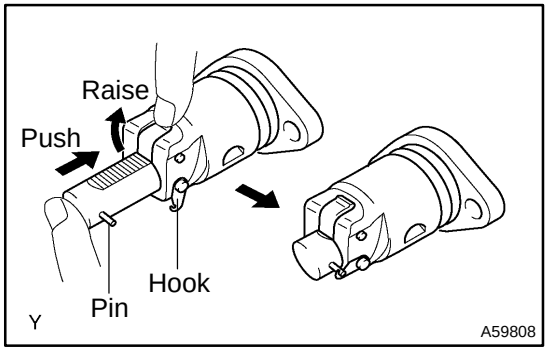

64. INSTALL CHAIN TENSIONER ASSY NO.1

(a) Check the O–ring is clean, and set the hook as shown in the illustration.

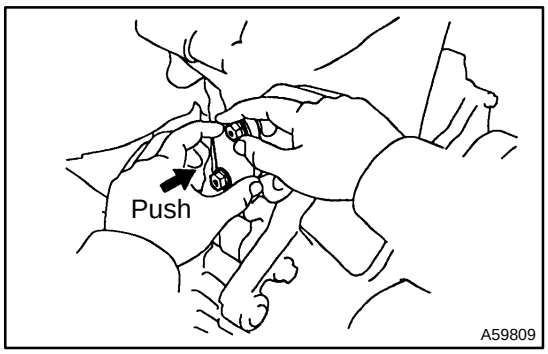

(b) Apply engine oil to the chain tensioner and install it.
Torque: 9.0 N·m (92 kgf·cm, 80 in.·lbf)

NOTICE:
When installing the tensioner, set the hook again if the hook release the plunger.

65. INSTALL CRANK POSITION SENSOR
Torque: 9.0 N·m (92 kgf·cm, 80 in.·lbf)

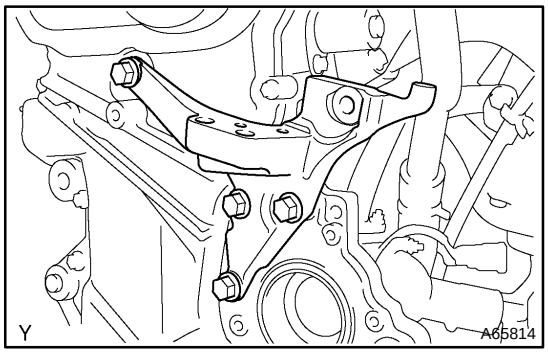

66. INSTALL TRANSVERSE ENGINE ENGINE MOUNTING BRACKET

(a) Install the engine mounting bracket with the 4 bolts.
Torque: 49 N·m (500 kgf·cm, 36 ft·lbf)

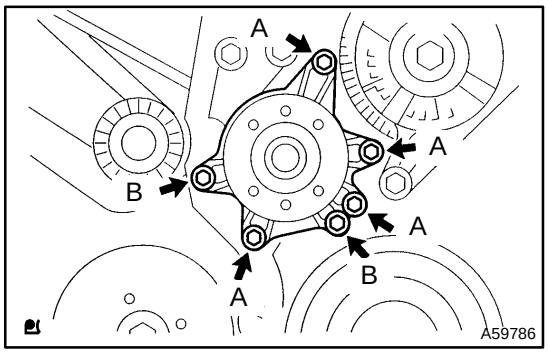

67. INSTALL WATER PUMP ASSY

(a) Place a new O–ring on the timing chain cover.
(b) Install the water pump with the 6 bolts.
Torque:9.0 N·m (92 kgf·cm, 80 in.·lbf)

HINT:
Each bolt length is indicated in the illustration.

Bolt A	35 mm (1.38 in.)
Bolt B	28 mm (1.10 in.)

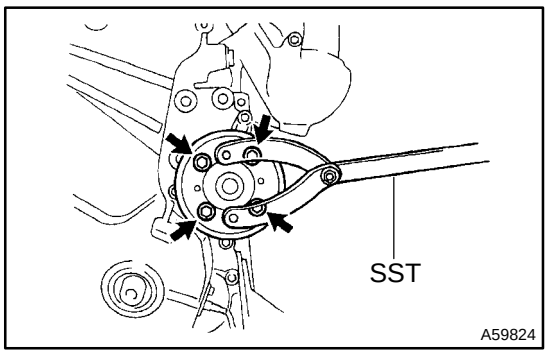

68. INSTALL WATER PUMP PULLEY

(a) Using SST, install the water pump pulley.
Torque: 15 N·m (153 kgf·cm, 11 ft·lbf)
SST 09960–10010

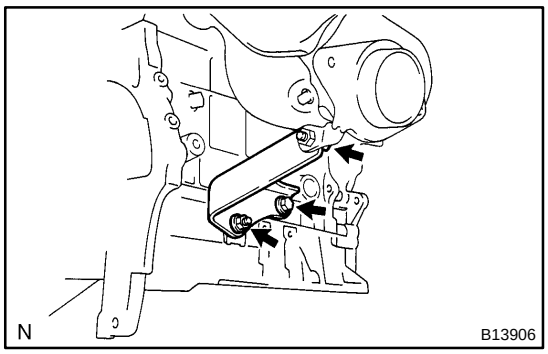

69. INSTALL MANIFOLD STAY

(a) Install the exhaust manifold stay with the 2 bolts and nut
Torque: 50 N·m (510 kgf·cm, 37 ft·lbf)

70. INSTALL EXHAUST MANIFOLD HEAT INSULATOR NO.1
Torque: 20 N·m (204 kgf·cm, 15 ft·lbf)

71. INSTALL V–RIBBED BELT TENSIONER ASSY

(a) Install the bolt, the nut and v–ribbed belt tensioner assy.
Torque:
Nut 29 N·m (296 kgf·cm, 21 ft·lbf)
Bolt 100 N·m (1,020 kgf·cm, 74 ft·lbf)

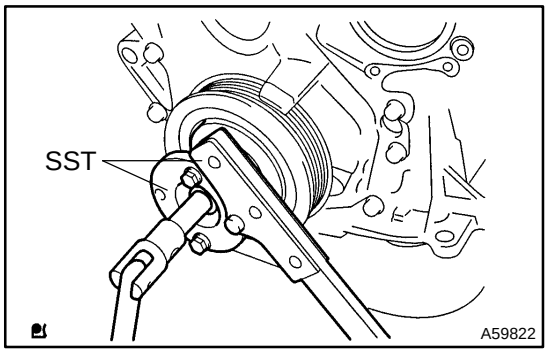

72. INSTALL CRANKSHAFT PULLEY

(a) Align the pulley set key with the key groove of the pulley, and slide on the pulley.

(b) Using SST, install the pulley bolt.
SST 09213–70011 (09213–70020), 09330–00021
Torque: 118 N·m (1,203 kgf·cm, 87 ft·lbf)

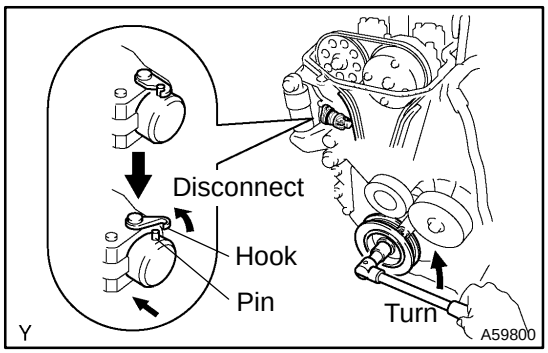

(c) Turn the crankshaft counterclockwise, and disconnect the plunger knock pin form the hook.

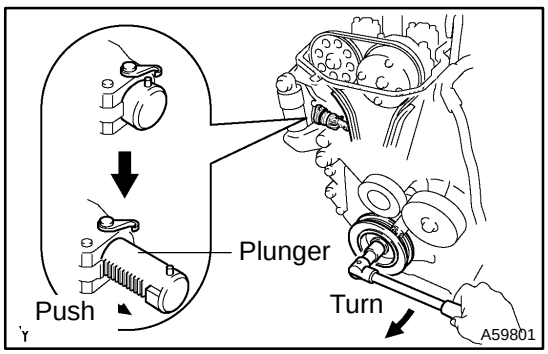

(d) Turn the crankshaft clockwise, and check that the slipper is pushed by the plunger.

73. INSTALL CYLINDER HEAD COVER SUB–ASSY

(a) Remove any old packing (FIPG) material.

HINT:

When FIPG on the head cover gasket side cannot be eliminated completely, replace the gasket.

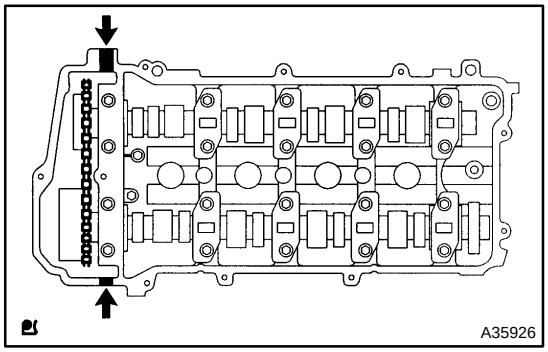

(b) Apply seal packing to 2 locations as shown in the illustration.

Seal packing:

Part No. 08826–00080 or equivalent

(c) Install the cylinder head cover gasket to the cylinder head cover.

HINT:

Part must be assembled within 3 minutes of application. Otherwise the material must be remove and reapplied.

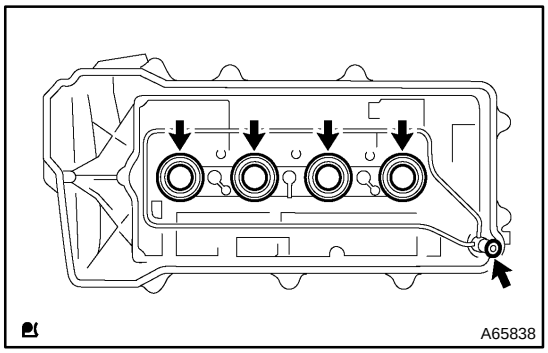

(d) Install the spark plug tube gasket and a new O–ring to the cylinder head cover.

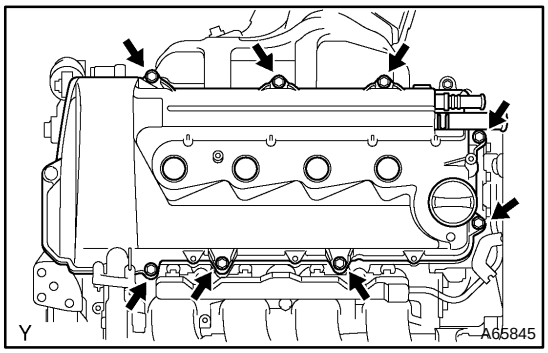

(e) Install the cylinder head cover and wire harness protector with the 8 bolts. Uniformly tighten the bolts, in the several passes, in the sequence shown.

Torque: 10 N·m (102 kgf·cm, 7 ft·lbf)

(f) Connect the 2 PCV hoses to the cylinder head cover.

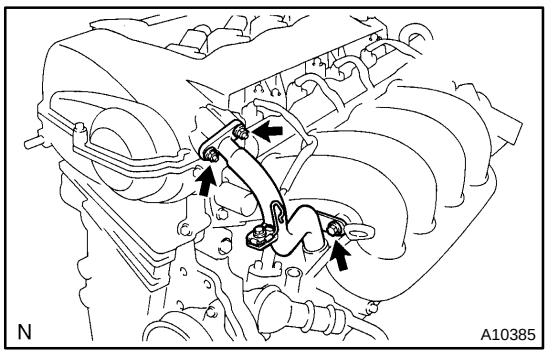

(g) Install a new gasket and No. 1 ventilation pipe with 2 nuts and bolt.

Torque:

Nut 10 N·m (102 kgf·cm, 7 ft·lbf)

Bolt 24 N·m (245 kgf·cm, 18 ft·lbf)

(h) Connect the No. 3 ventilation hose to the No. 1 ventilation pipe.

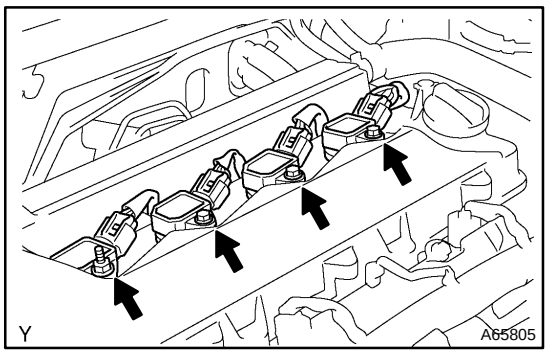

74. INSTALL IGNITION COIL ASSY
Torque: 9.0 N·m (92 kgf·cm, 80 in.·lbf)

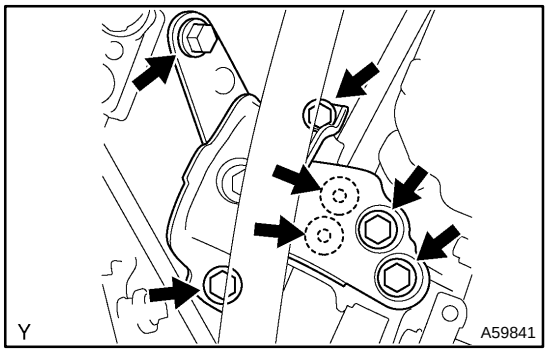

75. INSTALL ENGINE MOUNTING INSULATOR SUB–ASSY RH

(a) Install the engine mounting insulator sub–assy RH with the 5 bolts and the 2 nuts.
Torque: 52 N·m (530 kgf·cm, 38 ft·lbf)

76. INSTALL EXHAUST PIPE ASSY FRONT (See page 15–9)
77. INSTALL COMPRESSOR AND MAGNETIC CLUTCH (W/ AIR CONDITIONER) (See page 55–34)
78. INSTALL GENERATOR ASSY (See page 19–15)
79. INSTALL GENERATOR BRACKET NO.1 (See page 19–15)

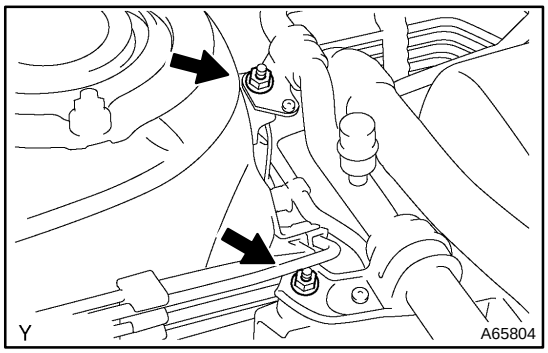

80. INSTALL SUCTION HOSE SUB–ASSY
Torque: 9.8 N·m (100 kgf·cm, 87 in.·lbf)

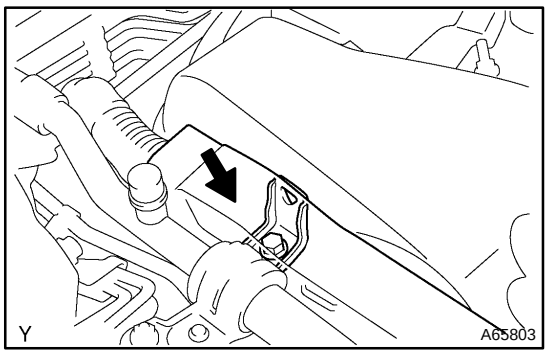

81. INSTALL WIRE HARNESS CLAMP
Torque: 10 N·m (102 kgf·cm, 7 ft·lbf)

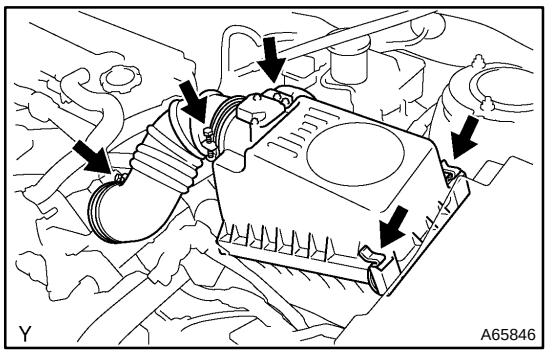

82. INSTALL AIR CLEANER ASSEMBLY WITH HOSE

(a) Connect the air cleaner hose to the throttle body.
(b) Attach the air cleaner cap to the air cleaner case, and install the 2 clamps.
(c) Tighten the air cleaner hose clamp.
(d) Connect the 5 vacuum hoses for the air cleaner cap.
(e) Connect the MAF meter connector.

83. INSTALL CYLINDER HEAD COVER NO.2
Torque: 7.0 N·m (71 kgf·cm, 62 in.·lbf)

84. INSTALL FRONT WHEEL RH
Torque: 103 N·m (1,050 kgf·cm, 76 ft·lbf)

85. ADD COOLANT (See page 16–6)

86. CHECK ENGINE COOLANT LEAK

87. CHECK ENGINE OIL LEAK

88. CHECK IDLE SPEED AND IGNITION TIMING (See page 14–174)
SST 09843–18040

89. INSPECT COMPRESSION (See page 14–174)
SST 09992–00500

90. INSPECT CO/HC (See page 14–174)

VALVE CLEARANCE (1ZZ–FE)

140OE–02

ADJUSTMENT

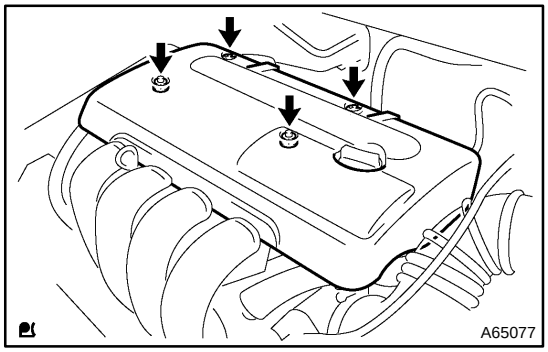

1. REMOVE CYLINDER HEAD COVER NO.2

(a) Remove the 2 nuts, 2 clips and cylinder head cover.

2. DISCONNECT ENGINE WIRE

(a) Remove the 5 clamps from the 5 clamp brackets.

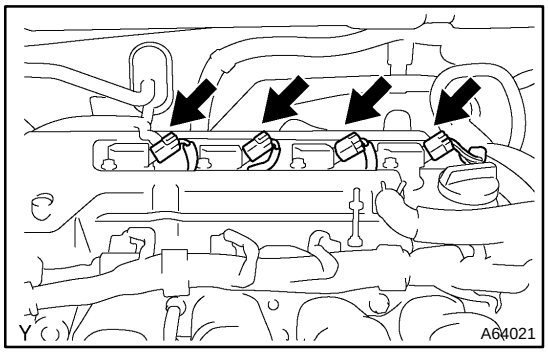

(b) Disconnect the 4 ignition coil connectors.

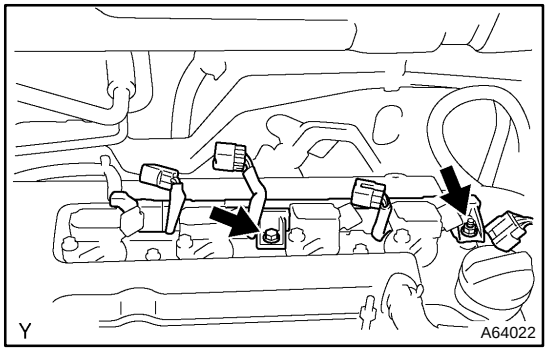

(c) Remove the bolt and nut installing the engine wire.

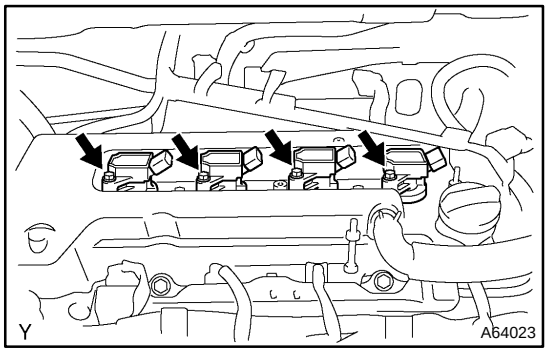

3. REMOVE IGNITION COIL ASSY

(a) Remove the 4 bolts and 4 ignition coils.

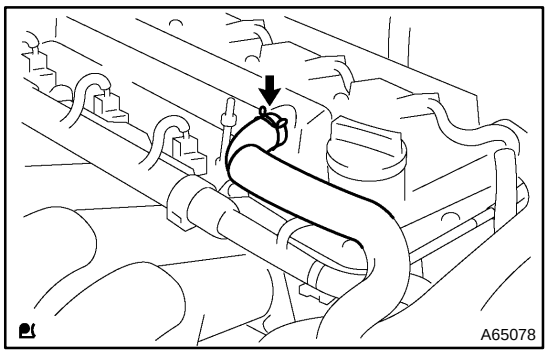

4. DISCONNECT VENTILATION HOSE

(a) Disconnect the ventilation hose from the cylinder head cover.

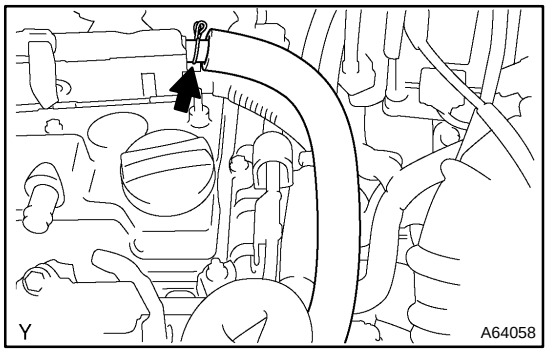

5. DISCONNECT VENTILATION HOSE NO.2

(a) Disconnect the ventilation hose from the cylinder head cover.

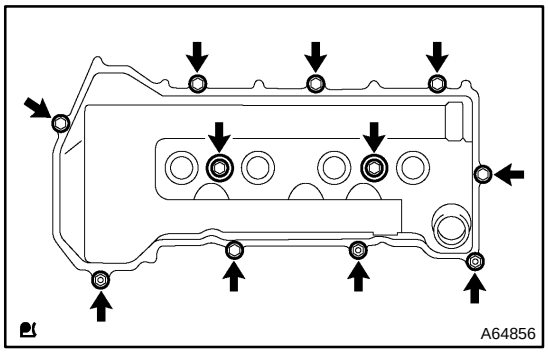

6. REMOVE CYLINDER HEAD COVER SUB–ASSY

(a) Remove the 9 bolts, 2 seal washers, 2 nuts, 3 clamp brackets and cylinder head cover.

7. REMOVE ENGINE UNDER COVER RH

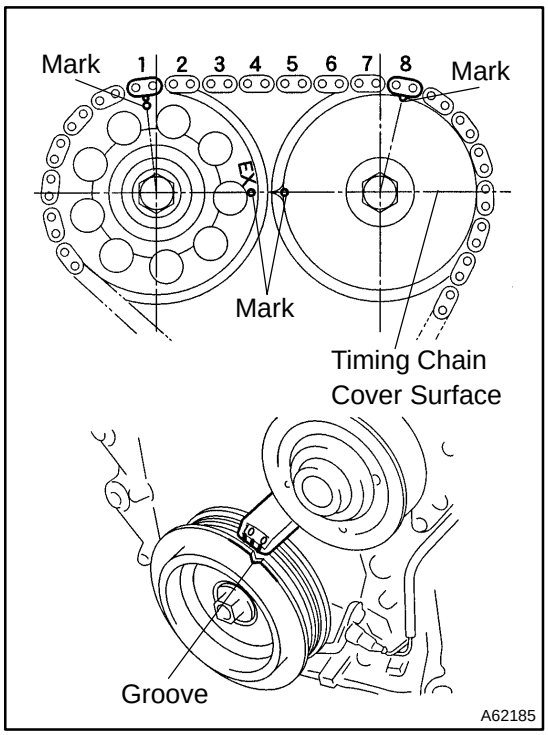

8. SET NO.1 CYLINDER TO TDC/COMPRESSION

(a) Turn the crankshaft pulley, and align its groove with timing mark ”0” of the timing chain cover.

(b) Check that the point marks of the camshaft timing sprocket and VVT timing sprocket are in straight line on the timing chain cover surface as shown in the illustration.

HINT:

If not, turn the crankshaft 1 revolution (360°) and align the marks as above.

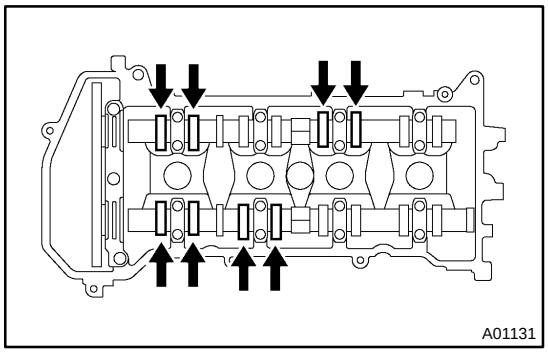

9. INSPECT VALVE CLEARANCE

(a) Check only the valves indicated.

(1) Using a feeler gauge, measure the clearance between the valve lifter and camshaft.

(2) Record the out–of specification valve clearance measurements. They will be used later to determine the required replacement valve lifter.

Valve clearance (Cold):
Intake 0.15 – 0.25 mm (0.0059 – 0.0098 in.)
Exhaust 0.25 – 0.35 mm (0.0098 – 0.0138 in.)

(b) Turn the crankshaft 1 revolution (360 °) and set No. 4 cylinder to TDC/compression.

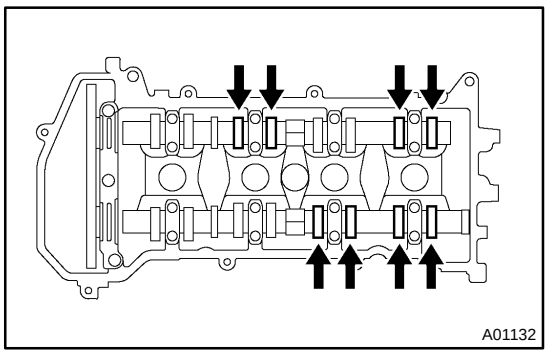

(c) Check only the valves indicated.

(1) Using a feeler gauge, measure the clearance between the valve lifter and camshaft.

(2) Record the out–of specification valve clearance measurements. They will be used later to determine the required replacement valve lifter.

Valve clearance (Cold):
Intake 0.15 – 0.25 mm (0.0059 – 0.0098 in.)
Exhaust 0.25 – 0.35 mm (0.0098 – 0.0138 in.)

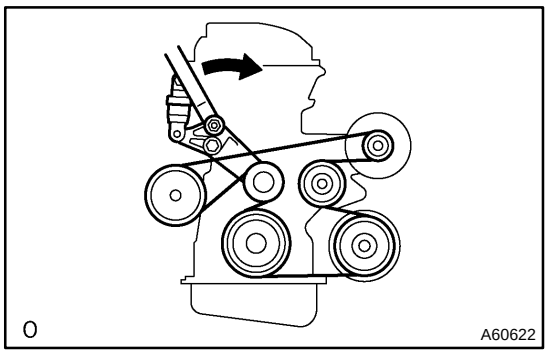

10. REMOVE FAN AND GENERATOR V BELT

(a) Turn the V–ribbed belt tensioner slowly clockwise and loosen it. Then, remove the fan and generator V belt and put back the V–ribbed belt tensioner little by little and fix it quietly.

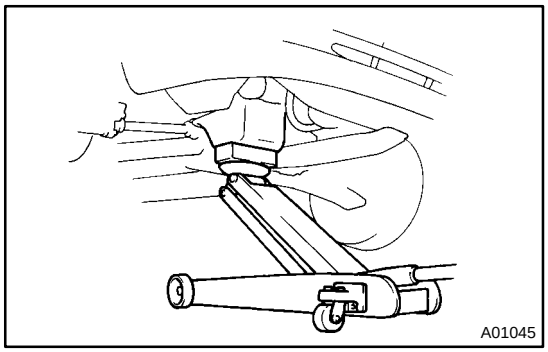

11. REMOVE ENGINE MOUNTING INSULATOR SUB–ASSY RH

(a) Remove the PS oil pump reservoir and put it aside.

(b) Place a wooden block between the jack and engine, and set the jack, then remove the 4 bolts, the 2 nuts and engine mounting insulator RH.

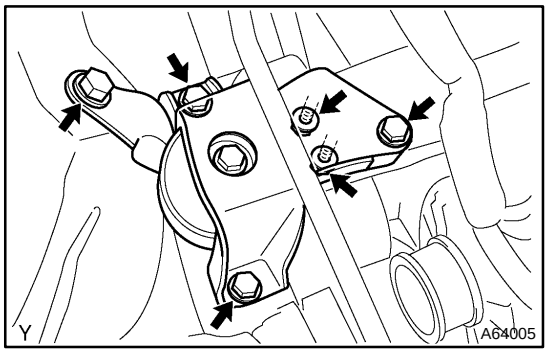

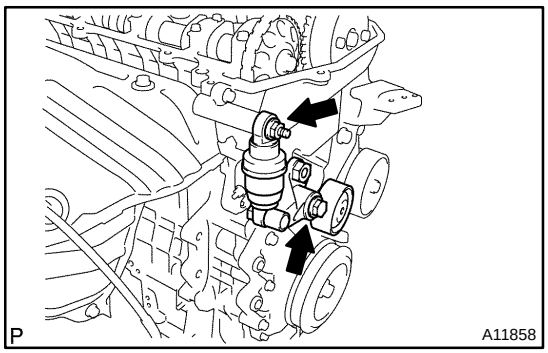

12. REMOVE V–RIBBED BELT TENSIONER ASSY

(a) Remove the bolt, nut and V–ribbed belt tensioner.

HINT:

Handle a jack up and down to remove the bolt.

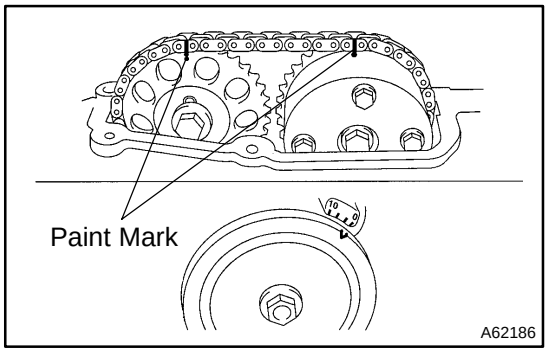

13. ADJUST VALVE CLEARANCE

NOTICE:

Be sure not to revolve the crankshaft without the chain tensioner.

(a) Set the No. 1 cylinder to the TDC/compression.

(b) Place match marks on the timing chain and camshaft timing sprockets.

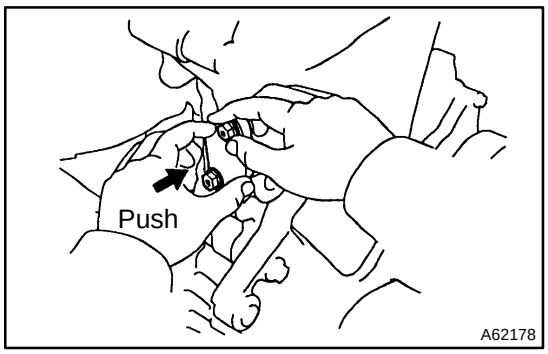

(c) Remove the 2 nuts and chain tensioner.

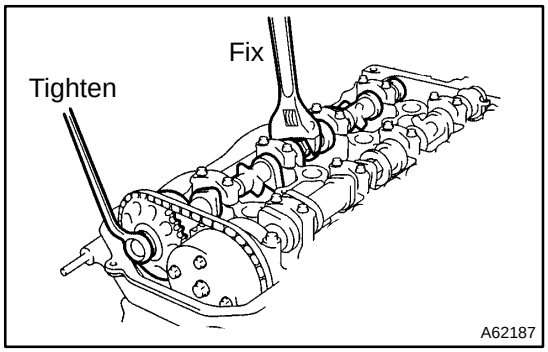

(d) Fix the camshaft with a spanner and so on, then loosen the camshaft timing gear set bolt.

NOTICE:
Be careful not to damage the valve lifter.

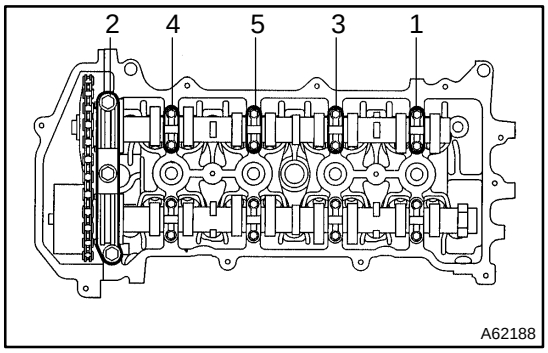

(e) Loosen the camshaft bearing cap bolts on No. 2 camshaft in the order as shown in the illustration in several passes,and remove the caps.

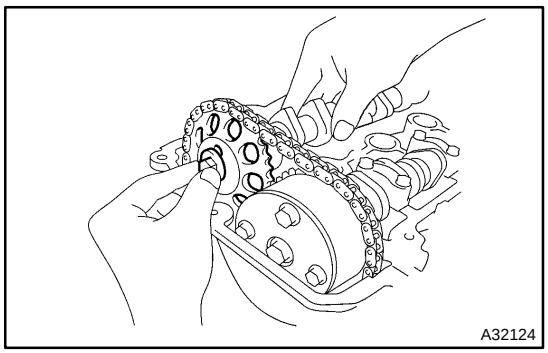

(f) Remove the camshaft timing gear as shown in the illustration.

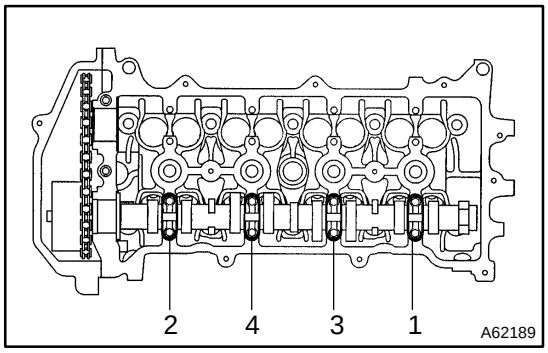

(g) Loosen the camshaft bearing cap bolts on camshaft in the order as shown in the illustration in several passes, and remove the caps.

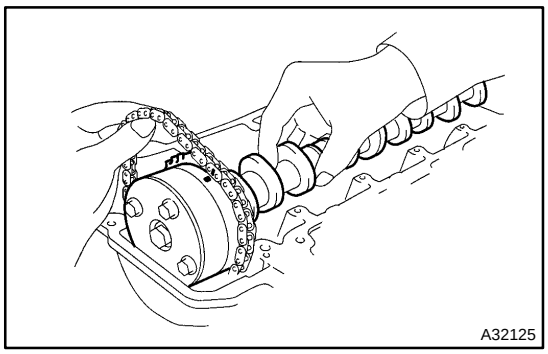

(h) Remove the camshaft with holding the timing chain.

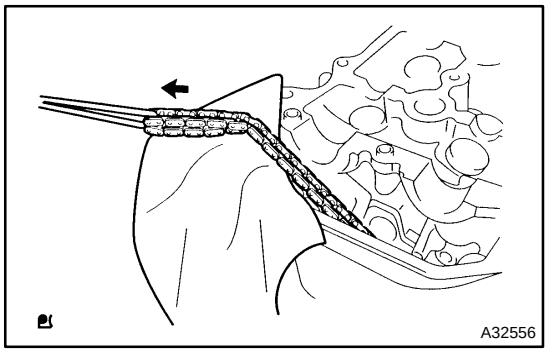

(i) Tie the timing chain with a string as shown in the illustration.

NOTICE:

Be careful not to drop anything inside the timing chain cover.

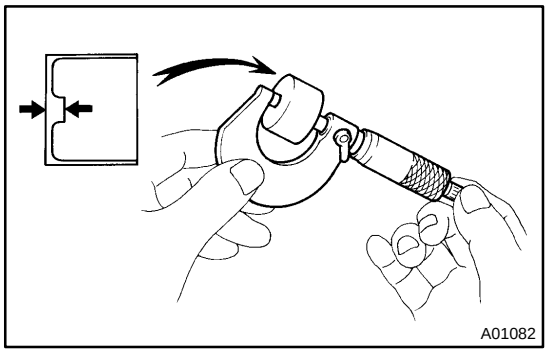

(j) Remove the valve lifters.

(k) Using a micrometer, measure the thickness of the removed lifter.

(l) Calculate the thickness of a new lifter so that the valve clearance comes within the specified value.

A	Thickness of new lifter
B	Thickness of used lifter
C	Measured valve clearance

Valve clearance:

Intake A = B + (C – 0.20 mm (0.0079 in.)

Exhaust A = B + (C – 0.30 mm (0.0118 in.)

HINT:

- Select a new lifter with a thickness as close as possible to the calculated values.
- Lifter are available in 35 sizes in increments of 0.020 mm (0.0008 in.), from 5.060 mm (0.1992 in.) to 5.740 mm (0.2260 in.).

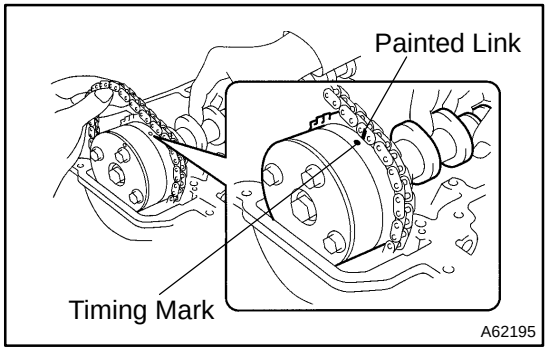

(m) As shown in the illustration, install the timing chain on the camshaft timing gear, with the painted links aligned with the timing marks on the camshaft timing sprocket.

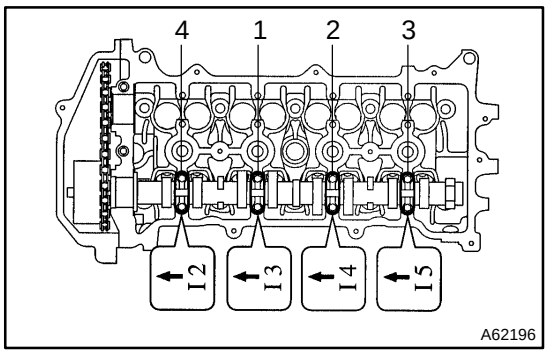

(n) Examine the front marks and numbers and tighten the bolts in the order shown in the illustration.
Torque: 13 N·m (133 kgf·cm, 10 ft·lbf)

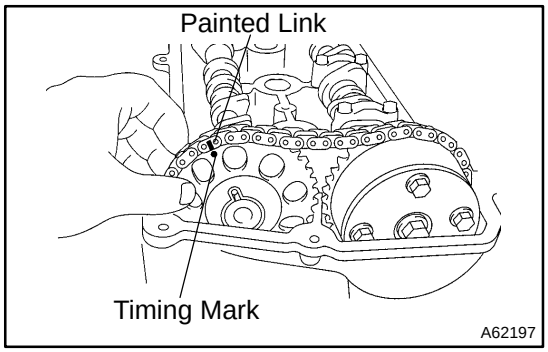

(o) Put the camshaft No.2 on the cylinder head with the painted links of the chain aligned with the timing mark on the camshaft timing sprocket.

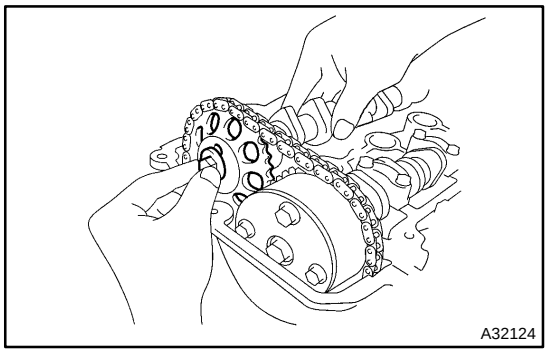

(p) Tighten the camshaft timing gear set bolt temporarily.

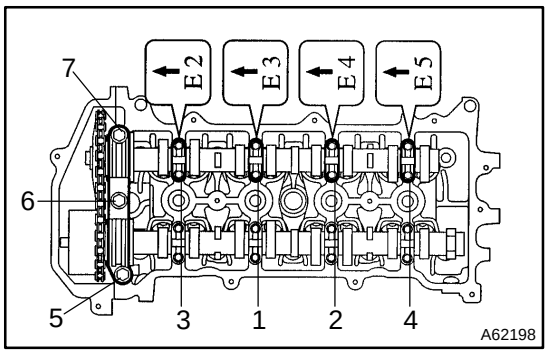

(q) Examine the front marks and numbers and tighten the bolts in the order shown in the illustration.
Torque: 13 N·m (133 kgf·cm, 10 ft·lbf)

(r) Install the bearing cap No. 1.
Torque: 23 N·m (235 kgf·cm, 17 ft·lbf)

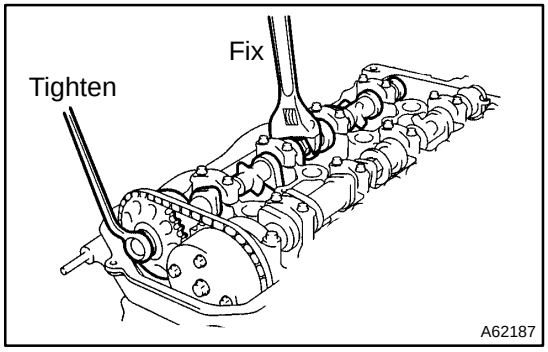

(s) Fix the camshaft with a spanner and so on, then tighten the camshaft timing gear set bolt.
Torque: 54 N·m (551 kgf·cm, 40 ft·lbf)

NOTICE:
Be careful not damage the valve lifter.

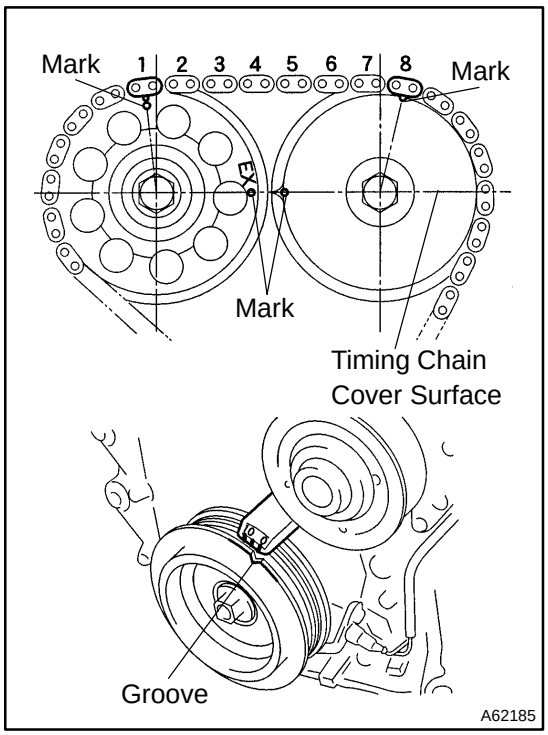

(t) Check the match marks on the timing chain and camshaft timing sprockets, and then the alignment of the pulley groove with timing mark of the chain cover as shown in the illustration.

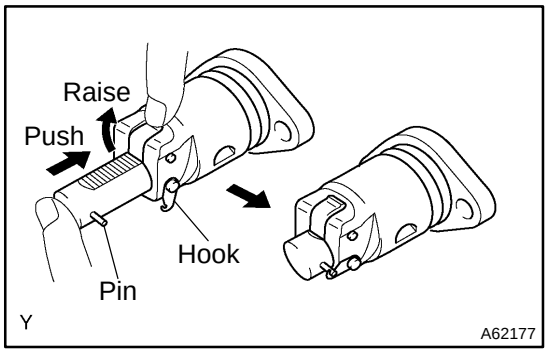

(u) Install chain tensioner.

(1) Check the O–ring is clean, and set the hook as shown in the illustration.

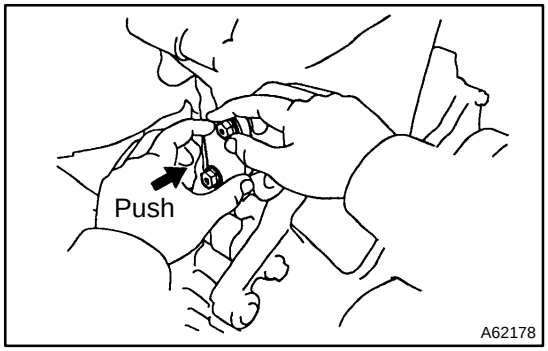

(2) Apply engine oil to the chain tensioner and install it with the 2 nuts.

Torque: 9.0 N·m (92 kgf·cm, 80 in·lbf)

NOTICE:

When installing the tensioner, set the hook again if the hook release the plunger.

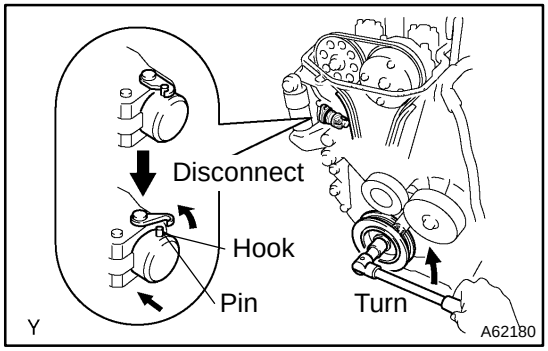

(3) Turn the crankshaft counterclockwise, and disconnect the plunger knock pin from the hook.

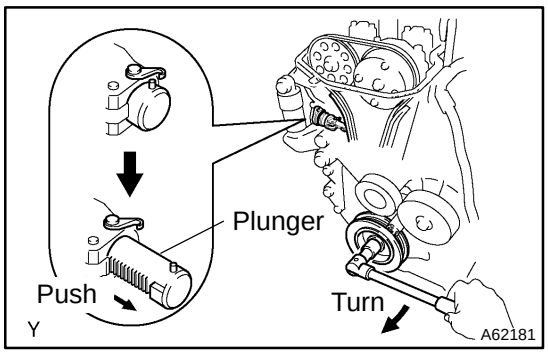

(4) Turn the crankshaft clockwise, and check that the slipper is pushed by the plunger.

HINT:

If the plunger does not spring out, press the slipper into the chain tensioner with a screwdriver so that the hook is released from the knock pin and the plunger springs out.

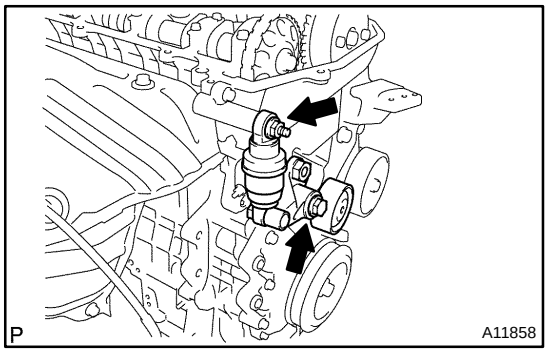

14. INSTALL V–RIBBED BELT TENSIONER ASSY

(a) Install the V–ribbed belt tensioner with the nut and bolt.

Torque:
29 N·m (296 kgf·cm, 21 ft·lbf) for Nut
69 N·m (704 kgf·cm, 51 ft·lbf) for Bolt

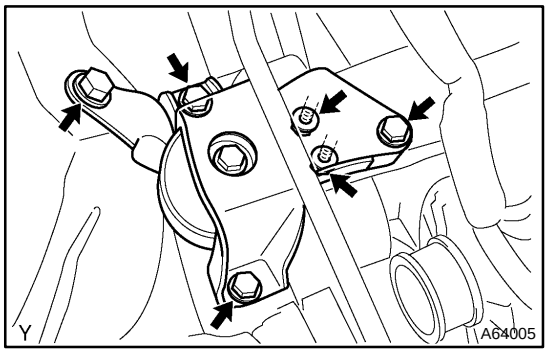

15. INSTALL ENGINE MOUNTING INSULATOR SUB–ASSY RH

(a) Install engine mounting insulator RH with the 4 bolts and the 2 nuts.

Torque: 52 N·m (530 kgf·cm, 38 ft·lbf)

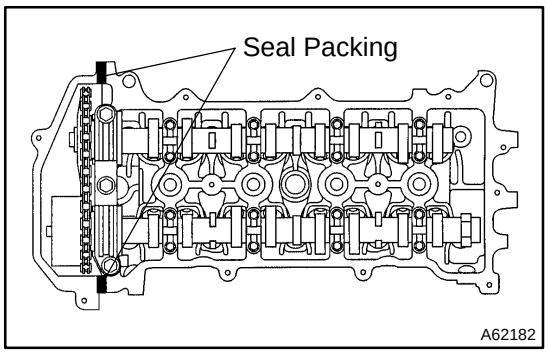

16. INSTALL CYLINDER HEAD COVER SUB–ASSY

(a) Remove any old packing (FIPG) material.

(b) Apply seal packing to 2 locations as shown in the illustration.

Seal packing: Part No. 08826–00080 or equivalent

NOTICE:

- **Remove any oil from the contact surface.**
- **Install the cylinder head cover within 3 minutes after applying seal packing.**
- **Do not put into engine oil 2 hours after installing.**

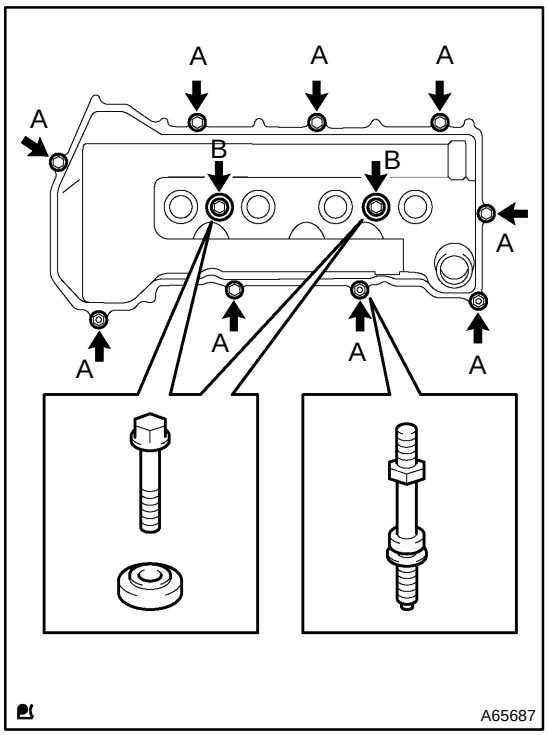

(c) Install the cylinder head cover and cable bracket with the 9 bolts, 2 seal washers and 2 nuts. Uniformly tighten the bolts and nuts, in the several passes.
Torque:
A 11 N·m (112 kgf·cm, 8 ft·lbf)
B 9.0 N·m (92 kgf·cm, 80 in·lbf)

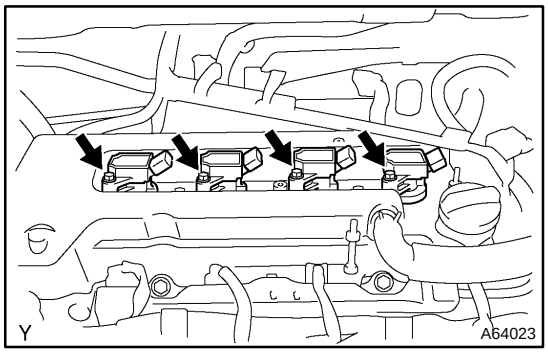

17. INSTALL IGNITION COIL ASSY
(a) Install the 4 ignition coils with the 4 bolts.
Torque: 9.0 N·m (92 kgf·cm, 80 in.·lbf)

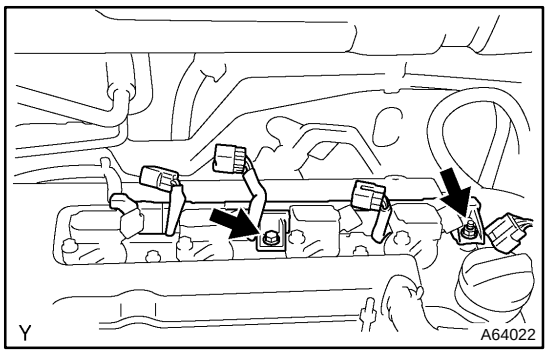

18. INSTALL ENGINE WIRE
(a) Install the engine wire with the bolt and nut.
Torque: 9.0 N·m (92 kgf·cm, 80 in.·lbf)

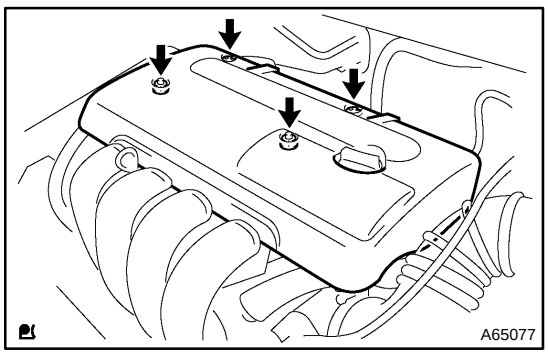

19. INSTALL CYLINDER HEAD COVER NO.2
(a) Install the cylinder head cover with the 2 nuts and 2 clips.
Torque: 7.0 N·m (71 kgf·cm, 62 in.·lbf)

20. CHECK ENGINE OIL LEAK

VALVE CLEARANCE (2ZZ–GE)

140R6–01

ADJUSTMENT

1. REMOVE ENGINE UNDER COVER RH

2. REMOVE CYLINDER HEAD COVER NO.2

(a) Remove the 3 bolts, the nut and the cylinder head cover No. 2.

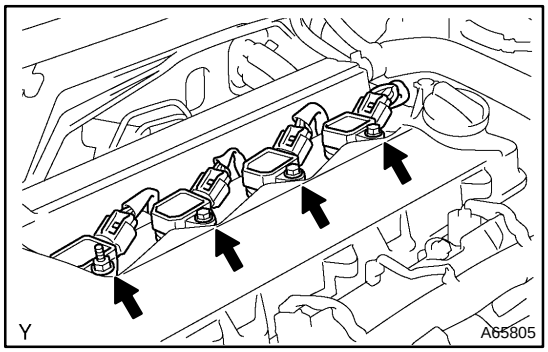

3. REMOVE IGNITION COIL ASSY

(a) Remove the 3 bolts and the nut, and disconnect the 4 connectors, and remove the 4 ignition coils.

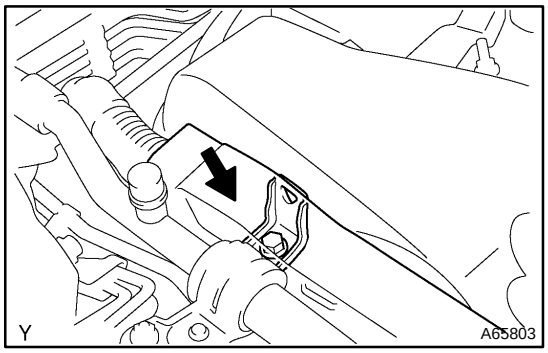

4. REMOVE WIRE HARNESS CLAMP

(a) Disconnect the engine wire harness.

(b) Remove the bolt and wiring harness clamp bracket.

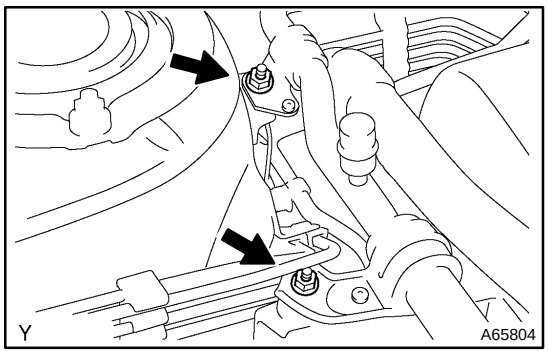

5. DISCONNECT SUCTION HOSE SUB–ASSY

(a) Remove the 2 nuts installing the suction hose sub–assy.

(b) Disconnect the suction hose sub–assy.

6. REMOVE CYLINDER HEAD COVER SUB–ASSY

(a) Disconnect the fuel hose clamp and 2 PCV hoses from the cylinder head cover.

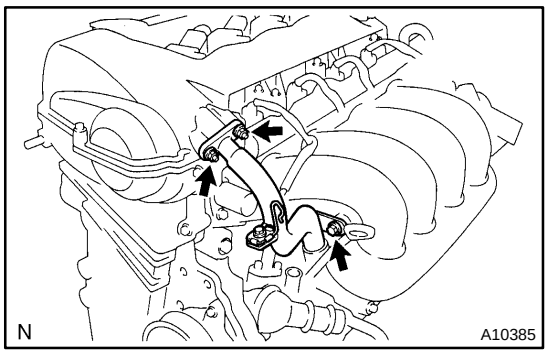

(b) Remove the 2 nuts, bolt and disconnect the No. 3 ventilation hose from the No. 1 ventilation pipe.
(c) Disconnect the ventilation No. 1 tube and gasket.

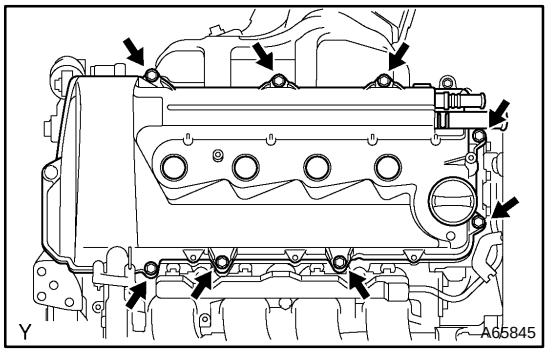

(d) Remove the 8 bolts, wire harness protector, cylinder head cover and gasket.
(e) Remove the O–ring from the cylinder head cover.

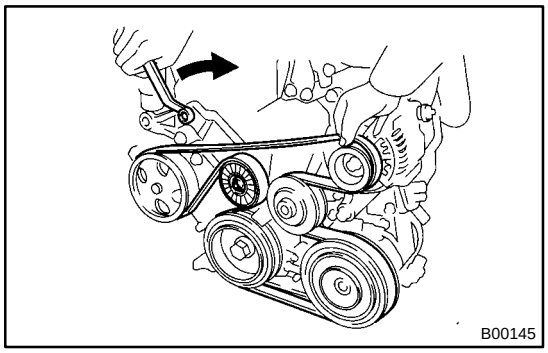

7. REMOVE FAN AND GENERATOR V BELT

(a) Turn the drive belt tensioner slowly clockwise and loosen it. Then, remove the drive belt and put back the drive belt tensioner little by little and fix it quietly.

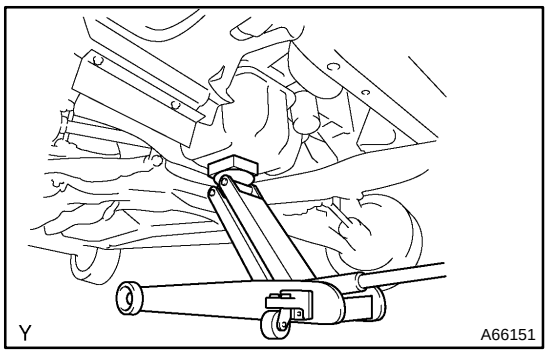

8. REMOVE ENGINE MOUNTING INSULATOR SUB–ASSY RH

(a) Set the jack to the engine.

HINT:

Place a wooden block between the jack and engine.

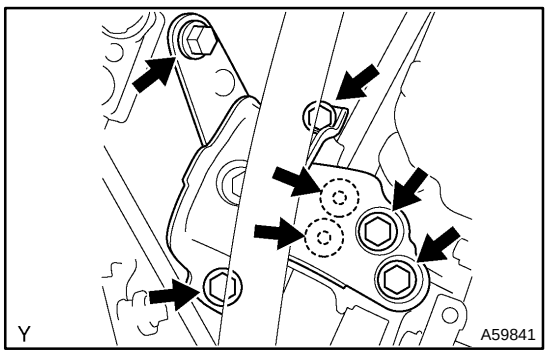

(b) Remove the 5 bolts, 2 nuts and engine mounting insulator sub–assy RH.

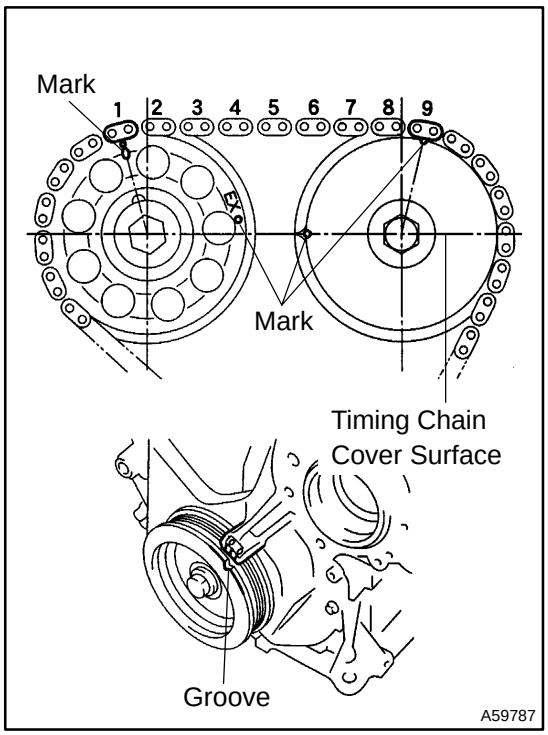

9. SET NO. 1 CYLINDER TO TDC/COMPRESSION

(a) Turn the crankshaft pulley, and align its groove with timing mark ”0” of the timing chain cover.

(b) Check that the point marks of the camshaft timing sprocket and VVT timing sprocket are in straight line on the timing chain cover surface as shown in the illustration.

HINT:

If not, turn the crankshaft 1 revolution (360°) and align the marks as above.

10. REMOVE V–RIBBED BELT TENSIONER ASSY

HINT:

Handle a jack up and down to remove the bolt.

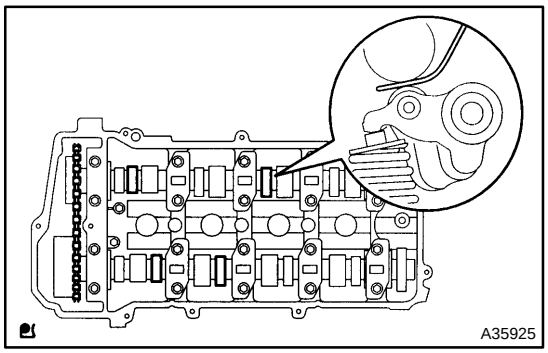

11. INSPECT VALVE CLEARANCE

(a) Check only the valves indicated.

(1) Using a feeler gauge, measure the clearance between the valve rocker arm and camshaft.

(2) Record the out–of specification valve clearance measurements. They will be used later to determine the required replacement adjusting shim.

Valve clearance (Cold)

Intake	0.08 – 0.18 mm (0.0031 – 0.0071 in.)
Exhaust	0.22 – 0.32 mm (0.0087 – 0.0126 in.)

(b) Turn the crankshaft 1 revolution (360 °) and set No. 4 cylinder to TDC/compression.

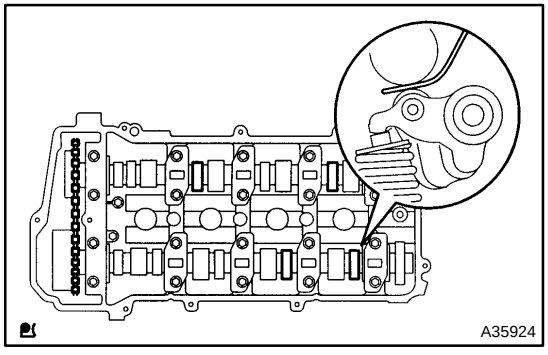

(c) Check only the valves indicated.

(1) Using a feeler gauge, measure the clearance between the valve rocker arm and camshaft.

(2) Record the out–of specification valve clearance measurements. They will be used later to determine the required replacement adjusting shim.

Valve clearance (Cold)

Intake	0.08 – 0.18 mm (0.0031 – 0.0071 in.)
Exhaust	0.22 – 0.32 mm (0.0087 – 0.0126 in.)

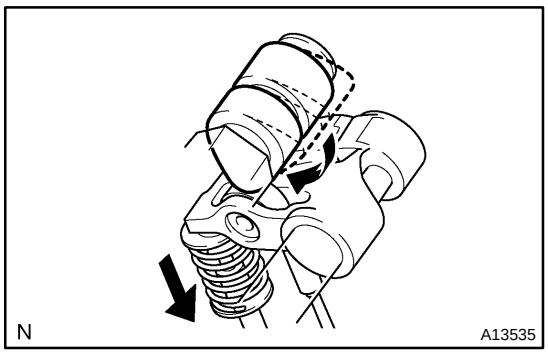

12. ADJUST VALVE CLEARANCE

(a) Set the SST.

(1) Turn the crankshaft so that the related rocker arm,where the valve clearance is adjusted, is fully pushed down.

NOTICE:

Remove the spark plug and take off the compression.

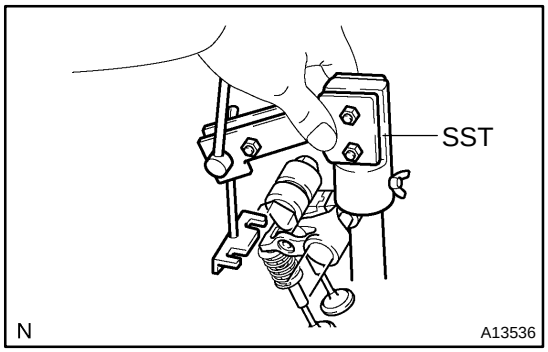

(2) Insert SST into the plug tube.

SST 09248–77010 (09248–07010)

NOTICE:

- **SST cannot be inserted unless the set screw is loosened.**
- **Make sure that the camshaft is in the same condition as step (1).**

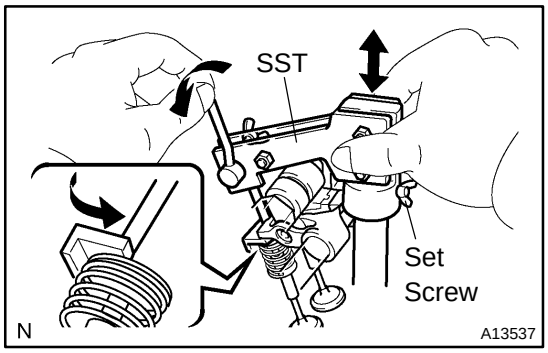

(3) Operate the lever so that SST's seat surface comes to contact with the valve retainer and lock them with the set screw.

NOTICE:

- **Clearance between the valve retainer and SST's seat surface is not allowed.**
- **Care should be taken not to make clearance when inserting SST, since a presence of clearance may unlock the keeper.**

(4) lock the set screw on the plug tube side of SST.

(5) Rotate the crankshaft so that the camshaft is positioned as shown in the illustration.

NOTICE:

- **Pay attention to the direction of the rotation to prevent the nose of the camshaft from interfering with the SST's shaft.**
- **Do not rotate the crankshaft excessively.**

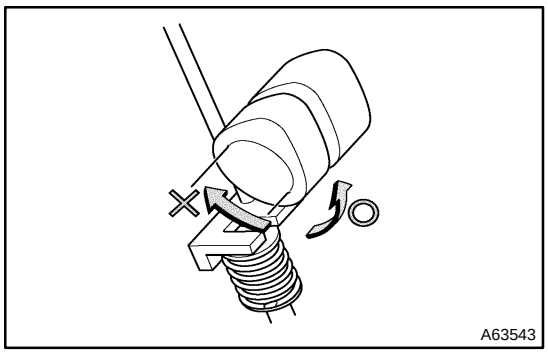

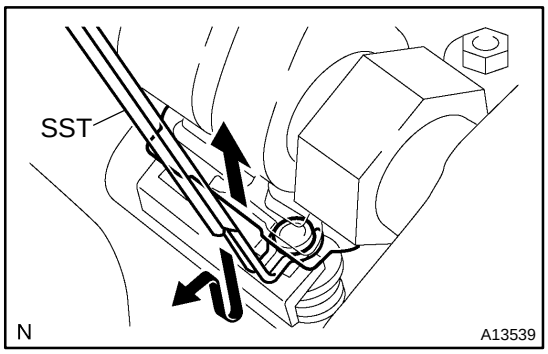

(b) Remove the adjusting shim.

(1) Lift the rocker arm to make a room and remove the adjusting shim using SST.

SST 09248–77010 (09248–07010)

NOTICE:

Do not remove SST in the condition that adjusting shim is removed.

HINT:

- Setting SST from the right above makes the removal easy.
- If there is not enough room, reset SST.

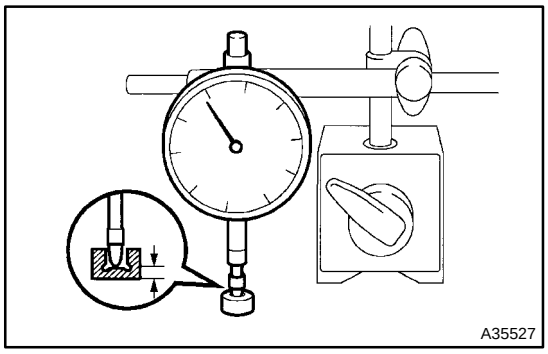

(2) Determine the size of the replaced shim according to there Formula or Charts:

- Using a dial indicator, measure the thickness of the removed shim.
- Calculate the thickness of a new shim so that the valve clearance comes within the specified value.

A	Thickness of new shim
B	Thickness of used shim
C	Measured valve clearance

Intake: A = B + (C – 0.13 mm (0.005 in.)) × 1.5

Exhaust: A = B + (C – 0.27 mm (0.011 in.)) × 1.5

HINT:

Shim are available in 41 sizes in increments of 0.020 mm (0.0008 in.), from 2.000 mm (0.0787 in.) to 2.800 mm (0.1102 in.).

2ZZ–GE: Valve Shim Selection Chart (Intake)

| Measure clearance mm(in.) \ Installed shim thickness mm(in.) | 2.000 (0.0787) | 2.020 (0.0795) | 2.040 (0.0803) | 2.060 (0.0811) | 2.080 (0.0819) | 2.100 (0.0827) | 2.120 (0.0835) | 2.140 (0.0843) | 2.160 (0.0850) | 2.180 (0.0858) | 2.200 (0.0866) | 2.210 (0.0870) | 2.220 (0.0874) | 2.230 (0.0878) | 2.240 (0.0882) | 2.250 (0.0886) | 2.260 (0.0890) | 2.270 (0.0894) | 2.280 (0.0898) | 2.290 (0.0902) | 2.300 (0.0906) | 2.310 (0.0909) | 2.320 (0.0913) | 2.330 (0.0917) | 2.340 (0.0921) | 2.350 (0.0925) | 2.360 (0.0929) | 2.370 (0.0933) | 2.380 (0.0937) | 2.390 (0.0941) | 2.400 (0.0945) | 2.410 (0.0949) | 2.420 (0.0953) | 2.430 (0.0957) | 2.440 (0.0961) | 2.450 (0.0965) | 2.460 (0.0969) | 2.470 (0.0972) | 2.480 (0.0976) | 2.490 (0.0980) | 2.500 (0.0984) | 2.510 (0.0988) | 2.520 (0.0992) | 2.530 (0.0996) | 2.540 (0.1000) | 2.550 (0.1004) | 2.560 (0.1008) | 2.580 (0.1016) | 2.600 (0.1024) | 2.620 (0.1031) | 2.640 (0.1039) | 2.660 (0.1047) | 2.680 (0.1055) | 2.700 (0.1063) | 2.720 (0.1071) | 2.740 (0.1079) | 2.760 (0.1087) | 2.780 (0.1094) | 2.800 (0.1102) |
|---|---|---

2ZZ–GE: Valve Shim Selection Chart (Exhaust)

| Measure clearance mm(in.) \ Installed shim thickness mm(in.) | 2.000 (0.0787) | 2.020 (0.0795) | 2.040 (0.0803) | 2.060 (0.0811) | 2.080 (0.0819) | 2.100 (0.0827) | 2.120 (0.0835) | 2.140 (0.0843) | 2.160 (0.0850) | 2.180 (0.0858) | 2.190 (0.0862) | 2.200 (0.0866) | 2.210 (0.0870) | 2.220 (0.0874) | 2.230 (0.0878) | 2.240 (0.0882) | 2.250 (0.0886) | 2.260 (0.0890) | 2.270 (0.0894) | 2.280 (0.0898) | 2.290 (0.0902) | 2.300 (0.0906) | 2.310 (0.0909) | 2.320 (0.0913) | 2.330 (0.0917) | 2.340 (0.0921) | 2.340 (0.0921) | 2.350 (0.0925) | 2.360 (0.0929) | 2.370 (0.0933) | 2.380 (0.0937) | 2.390 (0.0941) | 2.400 (0.0945) | 2.410 (0.0949) | 2.420 (0.0953) | 2.430 (0.0957) | 2.440 (0.0961) | 2.450 (0.0965) | 2.460 (0.0969) | 2.470 (0.0972) | 2.480 (0.0976) | 2.490 (0.0980) | 2.500 (0.0984) | 2.510 (0.0988) | 2.520 (0.0992) | 2.530 (0.0996) | 2.540 (0.1000) | 2.550 (0.1004) | 2.560 (0.1008) | 2.580 (0.1016) | 2.600 (0.1024) | 2.620 (0.1031) | 2.640 (0.1039) | 2.660 (0.1047) | 2.680 (0.1055) | 2.700 (0.1063) | 2.720 (0.1071) | 2.740 (0.1079) | 2.760 (0.1087) | 2.780 (0.1094) | 2.800 (0.1102) |
|---|---|---

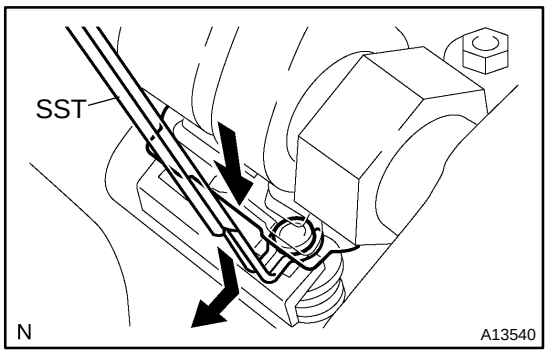

(c) Lift the rocker arm to make a room and use SST, install the adjusting shim.

HINT:

- Setting SST from the right above makes the removal easy.
- To remove SST from the adjusting shim, it is advisable to push down the rocker arm.

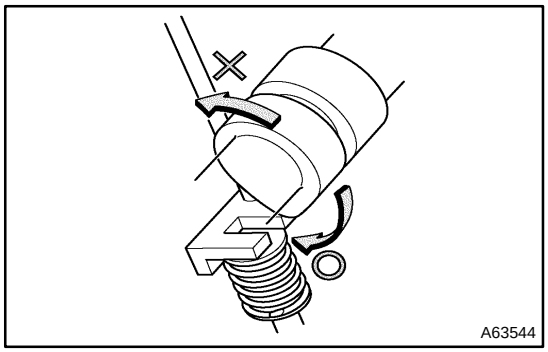

(d) Turn the crankshaft so that the related rocker arm, where the valve clearance is adjusted, is fully pushed down.

NOTICE:

- **Pay attention to the direction of the rotation to prevent the nose of the camshaft from interfering with the SST's shaft.**
- **Do not rotate the crankshaft excessively.**

(e) After loosening the 2 set screws of SST, remove SST itself.

SST 09248–77010(09248–07010)

13. INSTALL V–RIBBED BELT TENSIONER ASSY

Torque:
Nut 29 N·m (296 kgf·cm, 21 ft·lbf)
Bolt 100 N·m (1,020 kgf·cm, 74 ft·lbf)

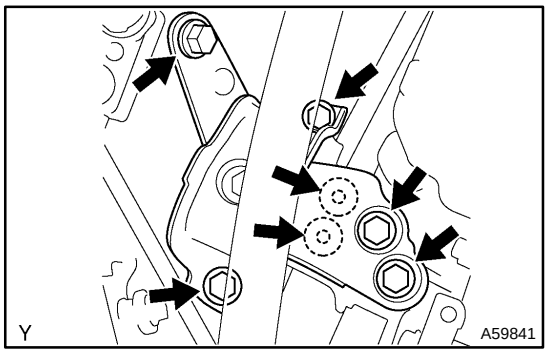

14. INSTALL ENGINE MOUNTING INSULATOR SUB–ASSY RH

(a) Install the engine mounting insulator sub–assy RH with the 5 bolts and the 2 nuts.

Torque: 52 N·m (530 kgf·cm, 38 ft·lbf)

15. INSTALL CYLINDER HEAD COVER SUB–ASSY

(a) Remove any old packing (FIPG) material.

HINT:

When FIPG on the head cover gasket side cannot be eliminated completely, replace the gasket.

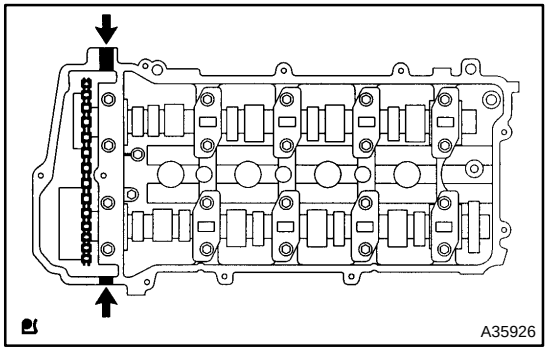

(b) Apply seal packing to 2 locations as shown in the illustration.

Seal packing: Part No. 08826–00080 or equivalent

(c) Install the cylinder head cover gasket to the cylinder head cover.

HINT:

Part must be assembled within 3 minutes of application. Otherwise the material must be remove and reapplied.

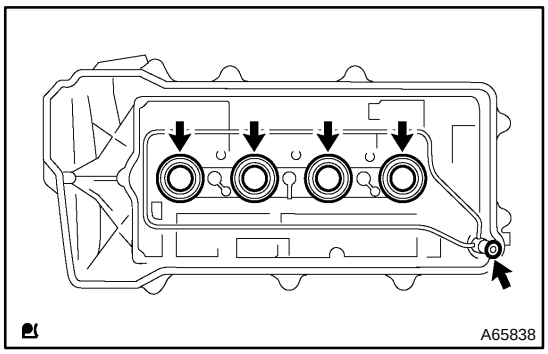

(d) Install the new spark plug tube gasket and a new O–ring to the cylinder head cover.

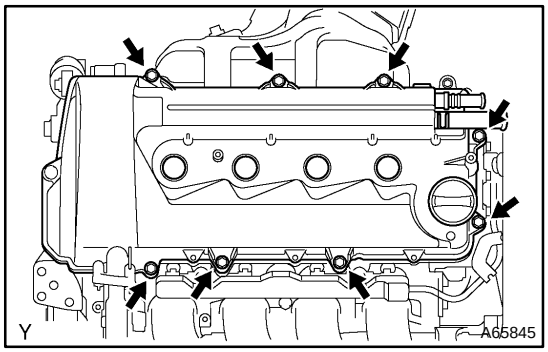

(e) Install the cylinder head cover and wire harness protector with the 8 bolts. Uniformly tighten the bolts, in the several passes, in the sequence shown.
Torque: 10 N·m (102 kgf·cm, 7 ft·lbf)

(f) Connect the PCV hoses to the cylinder head cover.

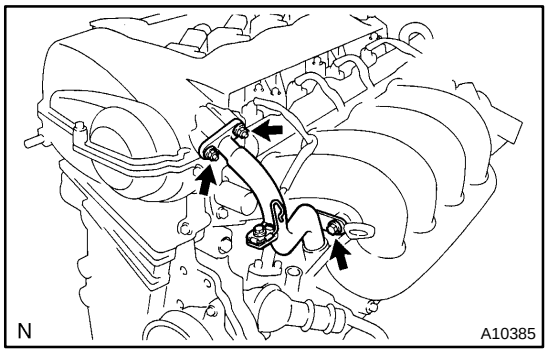

(g) Install a new gasket and No. 1 ventilation pipe with 2 nuts and bolt.
Torque:
Nut 10 N·m (102 kgf·cm, 7 ft·lbf)
Bolt 24 N·m (245 kgf·cm, 18 ft·lbf)

(h) Connect the No. 3 ventilation hose to the No. 1 ventilation pipe.

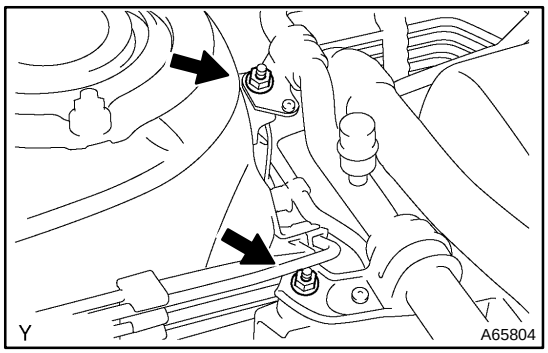

16. INSTALL SUCTION HOSE SUB–ASSY
Torque: 9.8 N·m (100 kgf·cm, 87 in.·lbf)

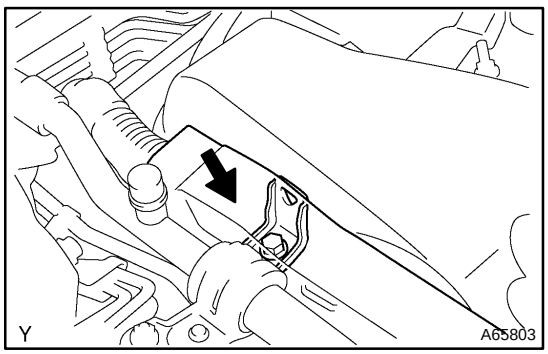

17. INSTALL WIRE HARNESS CLAMP
Torque: 10 N·m (102 kgf·cm, 7 ft·lbf)

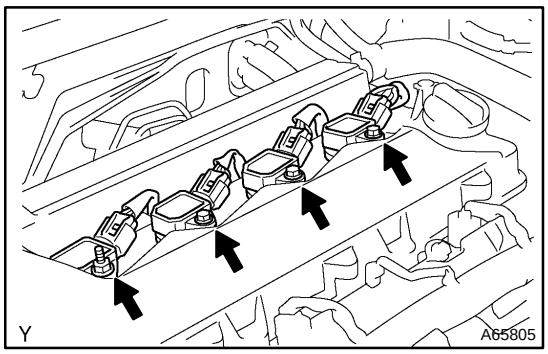

18. INSTALL IGNITION COIL ASSY
Torque: 9.0 N·m (92 kgf·cm, 80 in.·lbf)

19. INSTALL CYLINDER HEAD COVER NO.2
Torque: 7.0 N·m (71 kgf·cm, 62 in.·lbf)

20. INSPECT OIL LEAK

FAN AND GENERATOR V BELT (1ZZ–FE)

140OD–02

REPLACEMENT

1. REMOVE ENGINE UNDER COVER RH

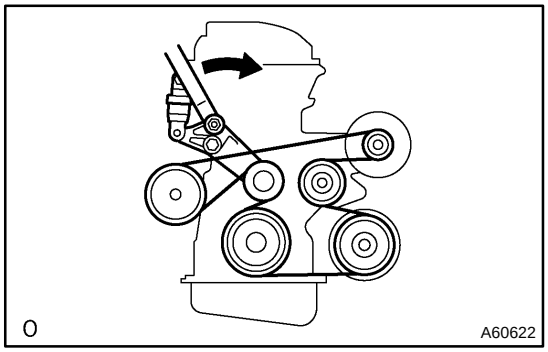

2. REMOVE FAN AND GENERATOR V BELT

(a) Turn the V–ribbed belt tensioner slowly clockwise and loosen it. Then, remove the fan and generator V belt and put back the V–ribbed belt tensioner little by little and fix it quietly.

FAN AND GENERATOR V BELT (2ZZ–GE)

140R5–01

REPLACEMENT

1. REMOVE ENGINE UNDER COVER RH

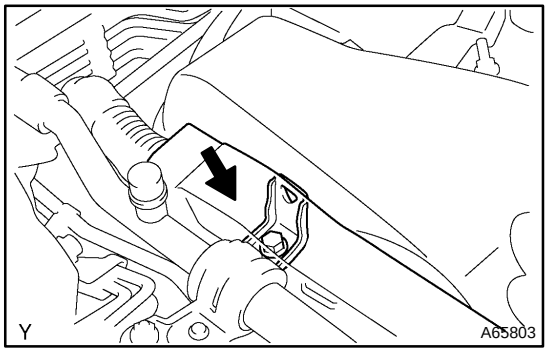

2. REMOVE WIRE HARNESS CLAMP

(a) Disconnect engine wire harness.
(b) Remove the bolt and wiring harness clamp bracket.

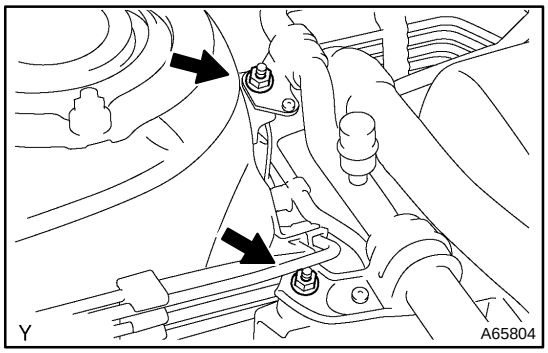

3. DISCONNECT SUCTION HOSE SUB–ASSY

(a) Remove the 2 nuts installing the suction hose sub–assy.
(b) Disconnect the suction hose sub–assy.

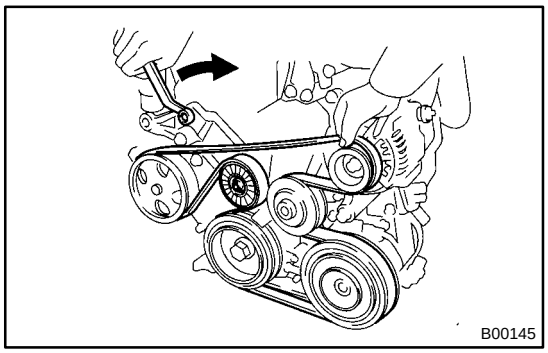

4. REMOVE FAN AND GENERATOR V BELT

(a) Turn the drive belt tensioner slowly clockwise and loosen it. Then, remove the drive belt and put back the drive belt tensioner little by little and fix it quietly.

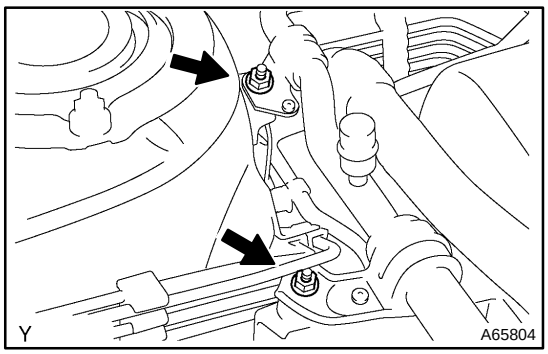

5. INSTALL SUCTION HOSE SUB–ASSY

Torque: 9.8 N·m (100 kgf·cm, 87 in.·lbf)

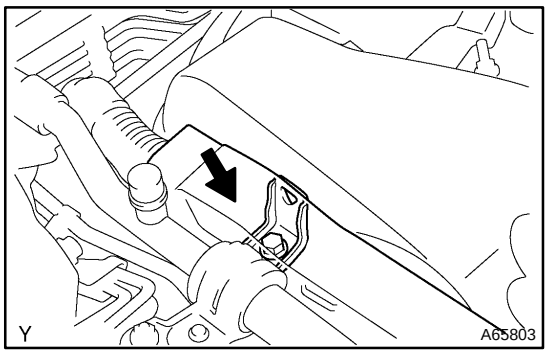

6. INSTALL WIRE HARNESS CLAMP
Torque: 10 N·m (102 kgf·cm, 7 ft·lbf)

PARTIAL ENGINE ASSY (1ZZ–FE)

140R1–01

COMPONENTS

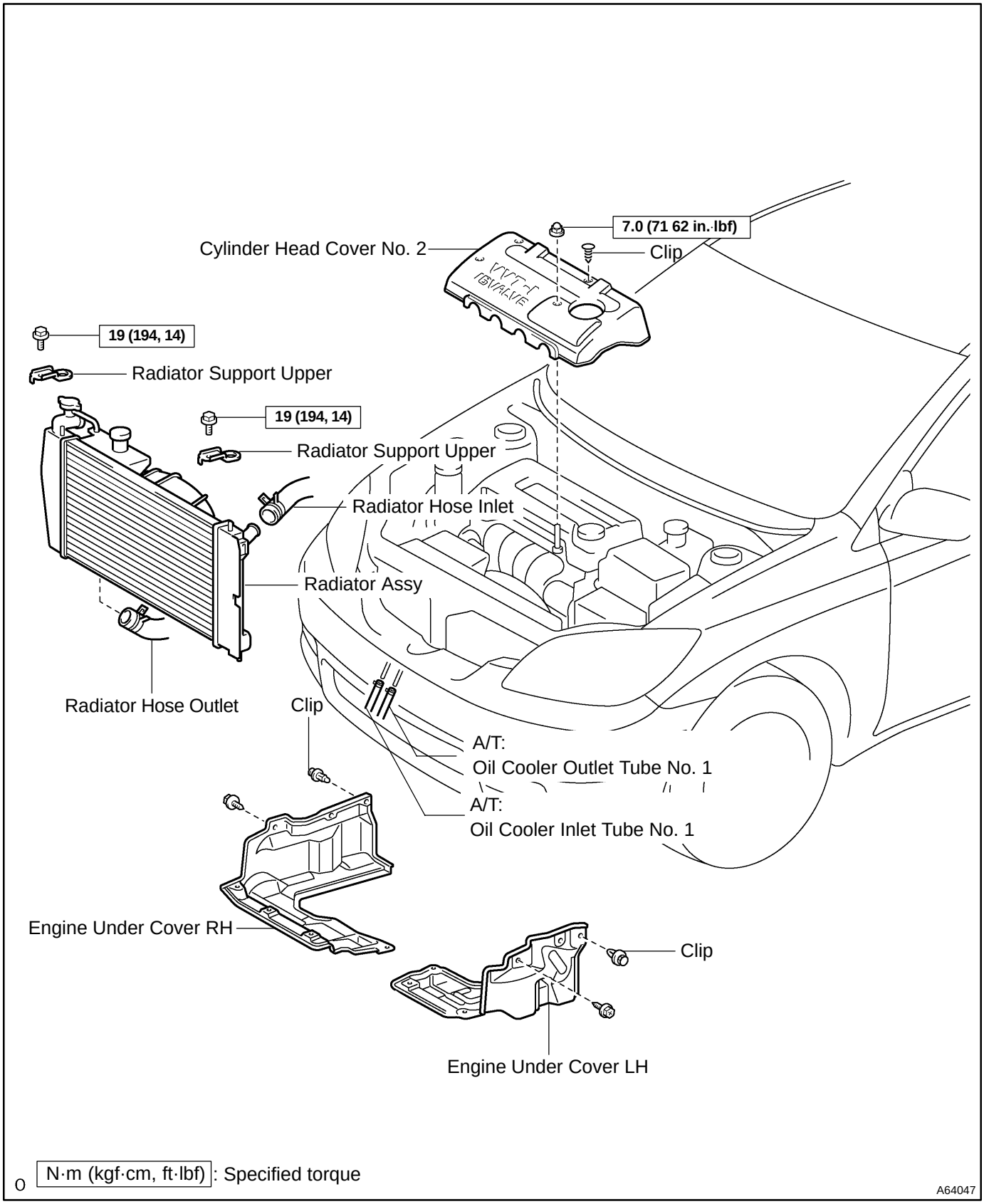

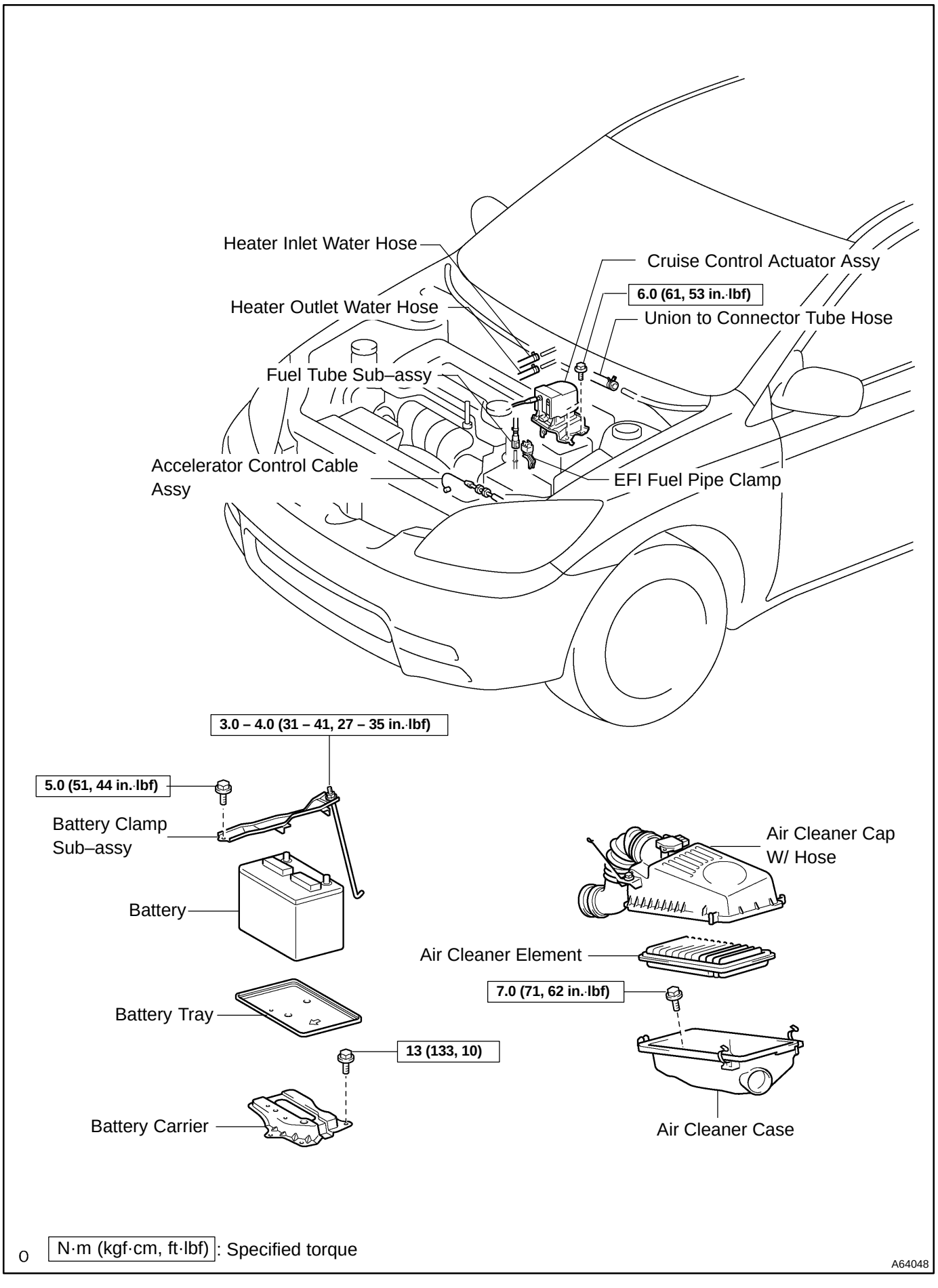
Heater Inlet Water Hose
Cruise Control Actuator Assy
6.0 (61, 53 in.·lbf)
Heater Outlet Water Hose
Union to Connector Tube Hose
Fuel Tube Sub–assy
Accelerator Control Cable Assy
EFI Fuel Pipe Clamp
3.0 – 4.0 (31 – 41, 27 – 35 in.·lbf)
5.0 (51, 44 in.·lbf)
Battery Clamp Sub–assy
Battery
Air Cleaner Cap W/ Hose
Air Cleaner Element
7.0 (71, 62 in.·lbf)
Battery Tray
13 (133, 10)
Battery Carrier
Air Cleaner Case
o N·m (kgf·cm, ft·lbf): Specified torque
A64048

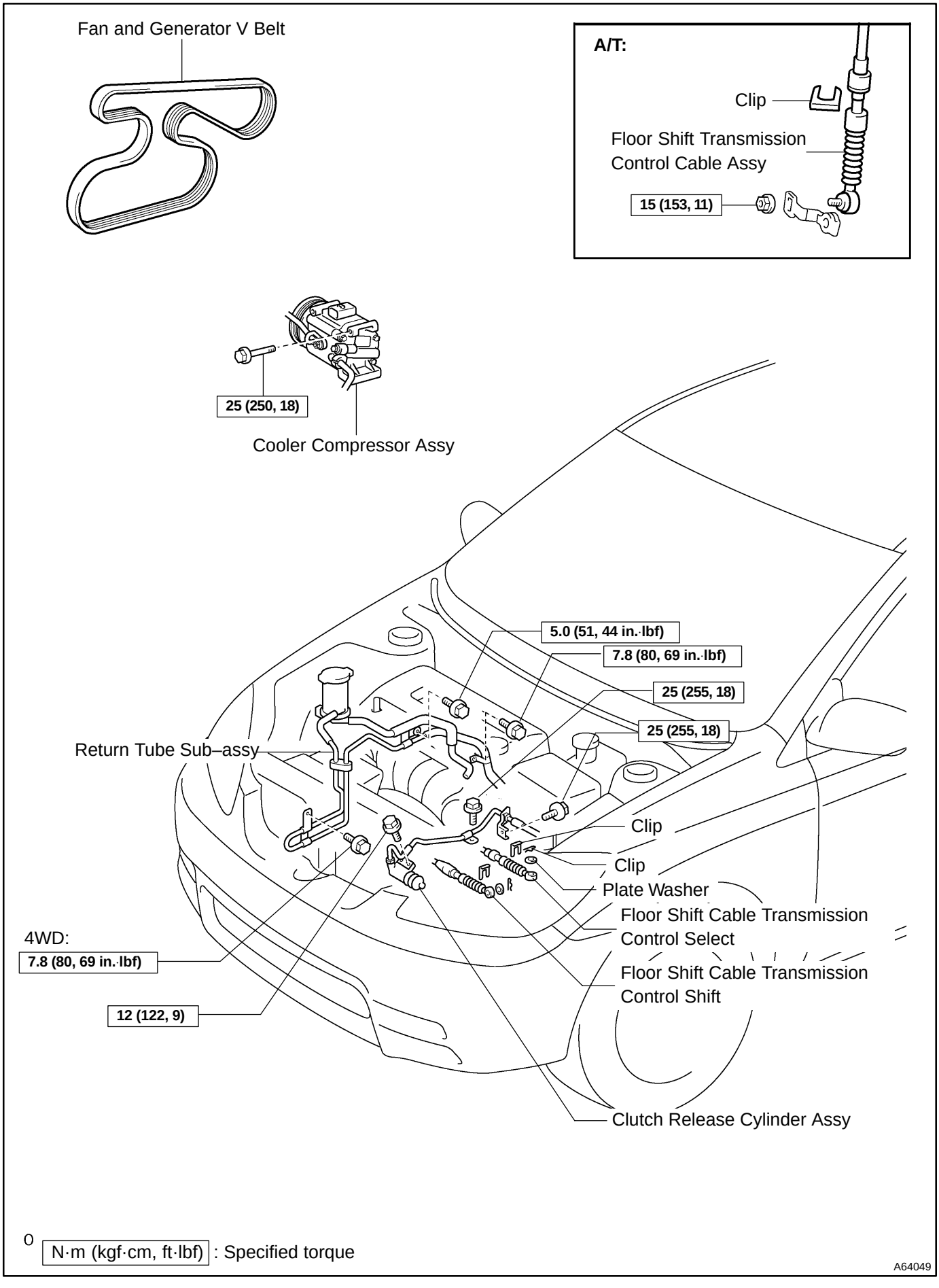
Fan and Generator V Belt
A/T:
Clip
Floor Shift Transmission Control Cable Assy
15 (153, 11)
25 (250, 18)
Cooler Compressor Assy
5.0 (51, 44 in.·lbf)
7.8 (80, 69 in.·lbf)
25 (255, 18)
25 (255, 18)
Return Tube Sub–assy
Clip
Clip
Plate Washer
Floor Shift Cable Transmission Control Select
Floor Shift Cable Transmission Control Shift
4WD:
7.8 (80, 69 in.·lbf)
12 (122, 9)
Clutch Release Cylinder Assy
FRONT
O N·m (kgf·cm, ft·lbf) : Specified torque
A64049

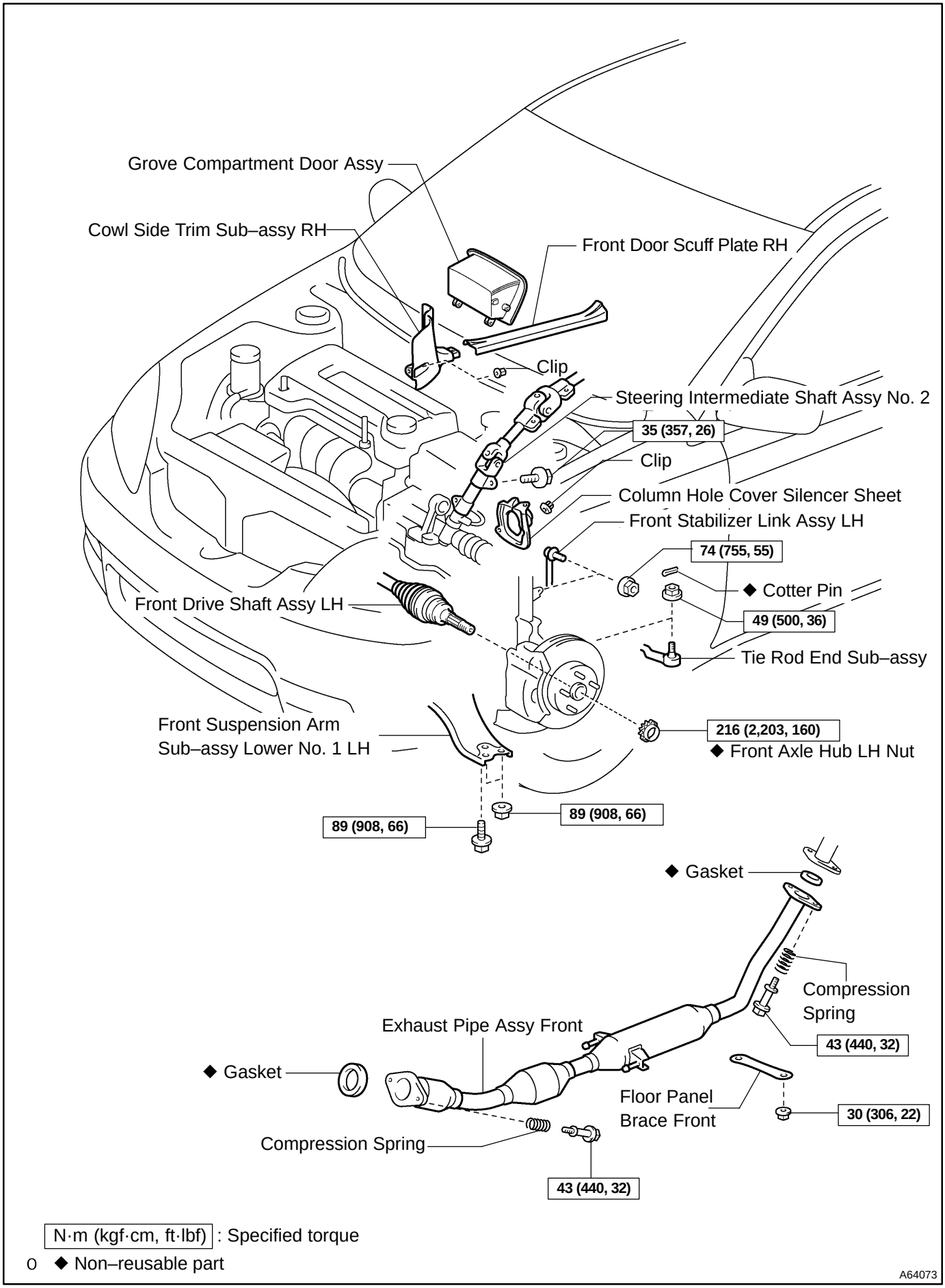
Grove Compartment Door Assy
Cowl Side Trim Sub–assy RH
Front Door Scuff Plate RH
Clip
Steering Intermediate Shaft Assy No. 2
35 (357, 26)
Clip
Column Hole Cover Silencer Sheet
Front Stabilizer Link Assy LH
74 (755, 55)
◆ Cotter Pin
49 (500, 36)
Front Drive Shaft Assy LH
Tie Rod End Sub–assy
Front Suspension Arm
Sub–assy Lower No. 1 LH
216 (2,203, 160)
◆ Front Axle Hub LH Nut
89 (908, 66)
89 (908, 66)
◆ Gasket
Compression
Spring
Exhaust Pipe Assy Front
43 (440, 32)
◆ Gasket
Floor Panel
Brace Front
30 (306, 22)
Compression Spring
43 (440, 32)
N·m (kgf·cm, ft·lbf) : Specified torque
◆ Non–reusable part
A64073

4WD:

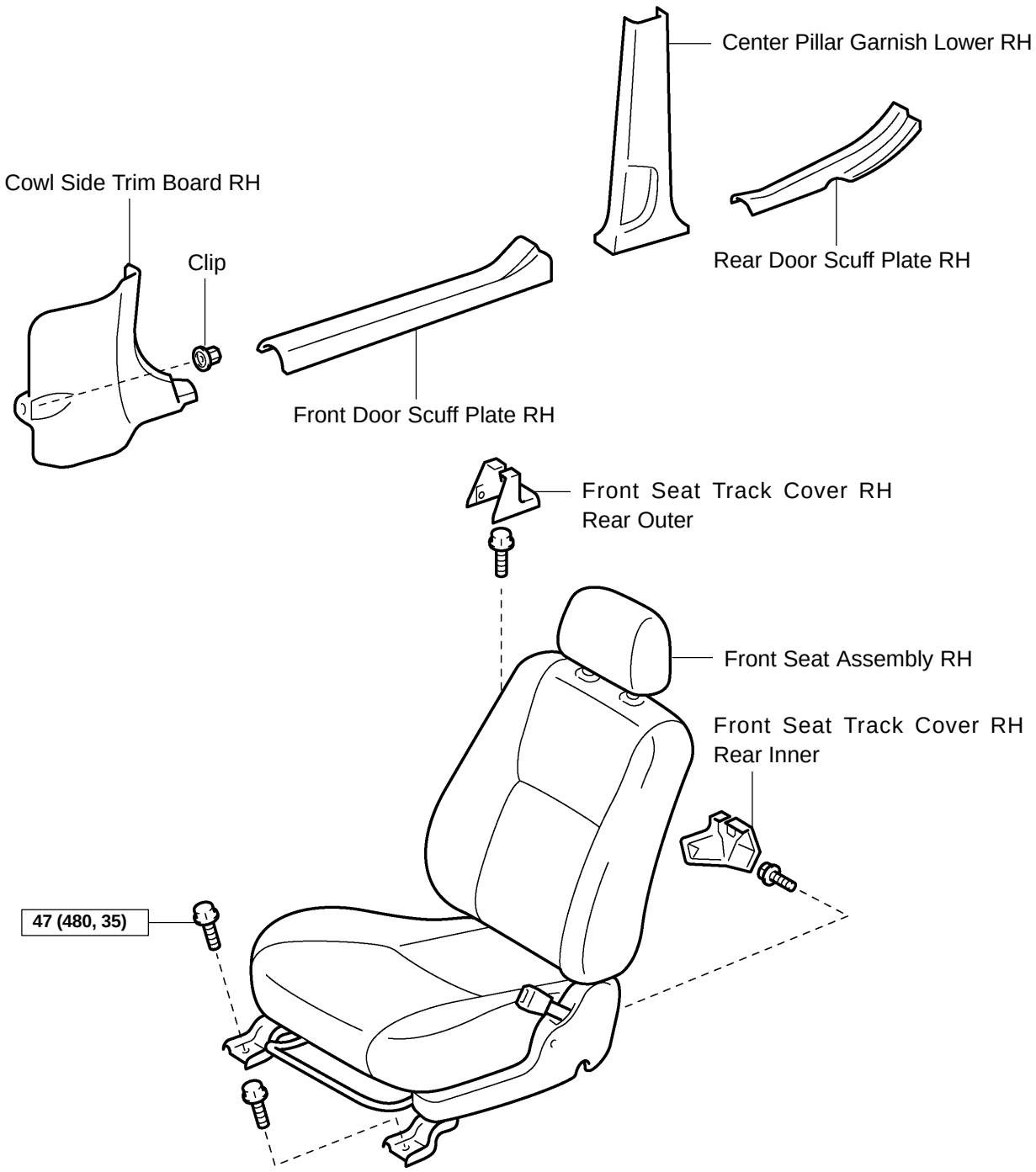
Center Pillar Garnish Lower RH
Cowl Side Trim Board RH
Clip
Rear Door Scuff Plate RH
Front Door Scuff Plate RH
Front Seat Track Cover RH
Rear Outer
Front Seat Assembly RH
Front Seat Track Cover RH
Rear Inner
47 (480, 35)
A65621

4WD:

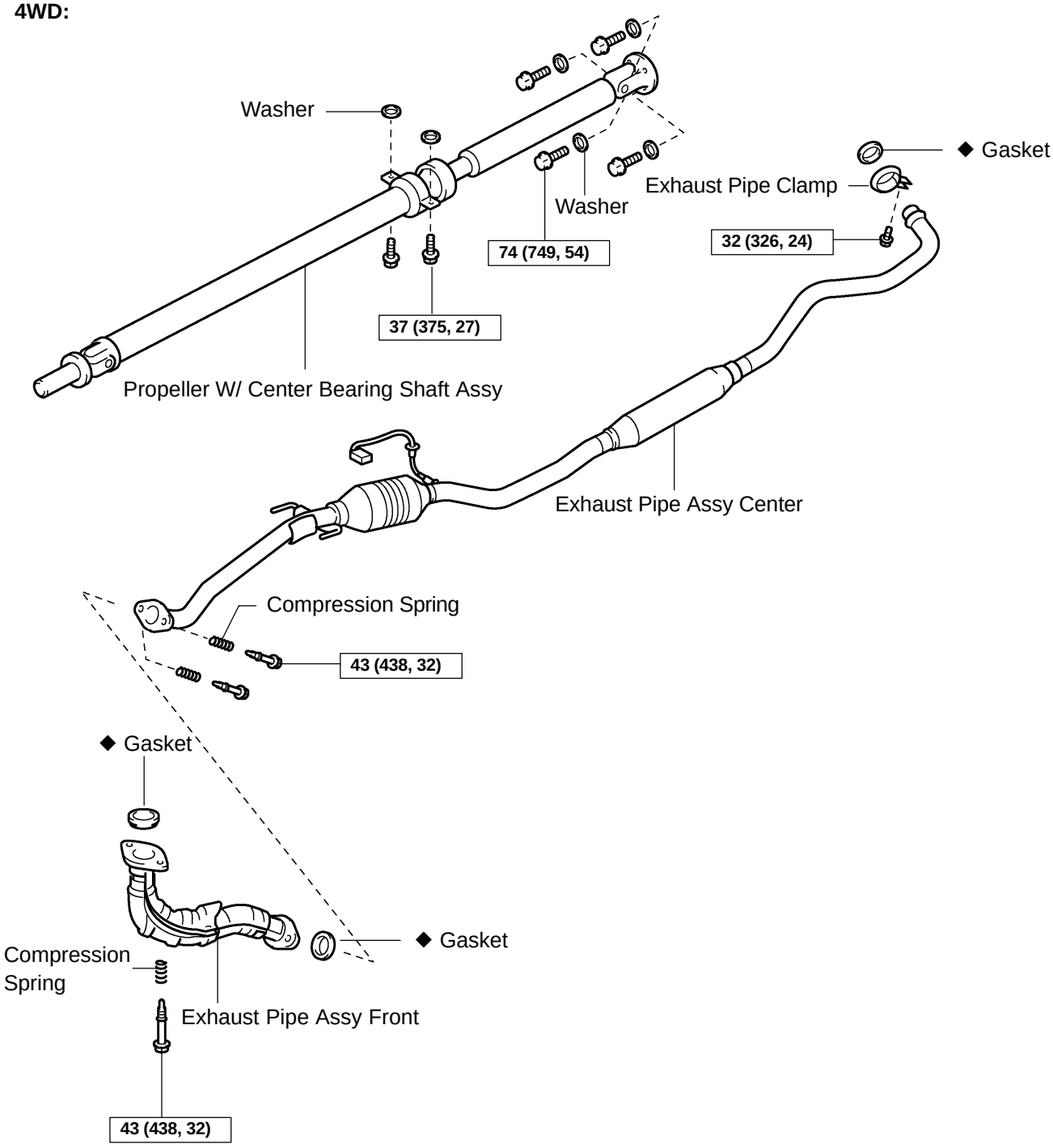

N·m (kgf·cm, ft·lbf) : Specified torque

◆ Non–reusable part

A64068

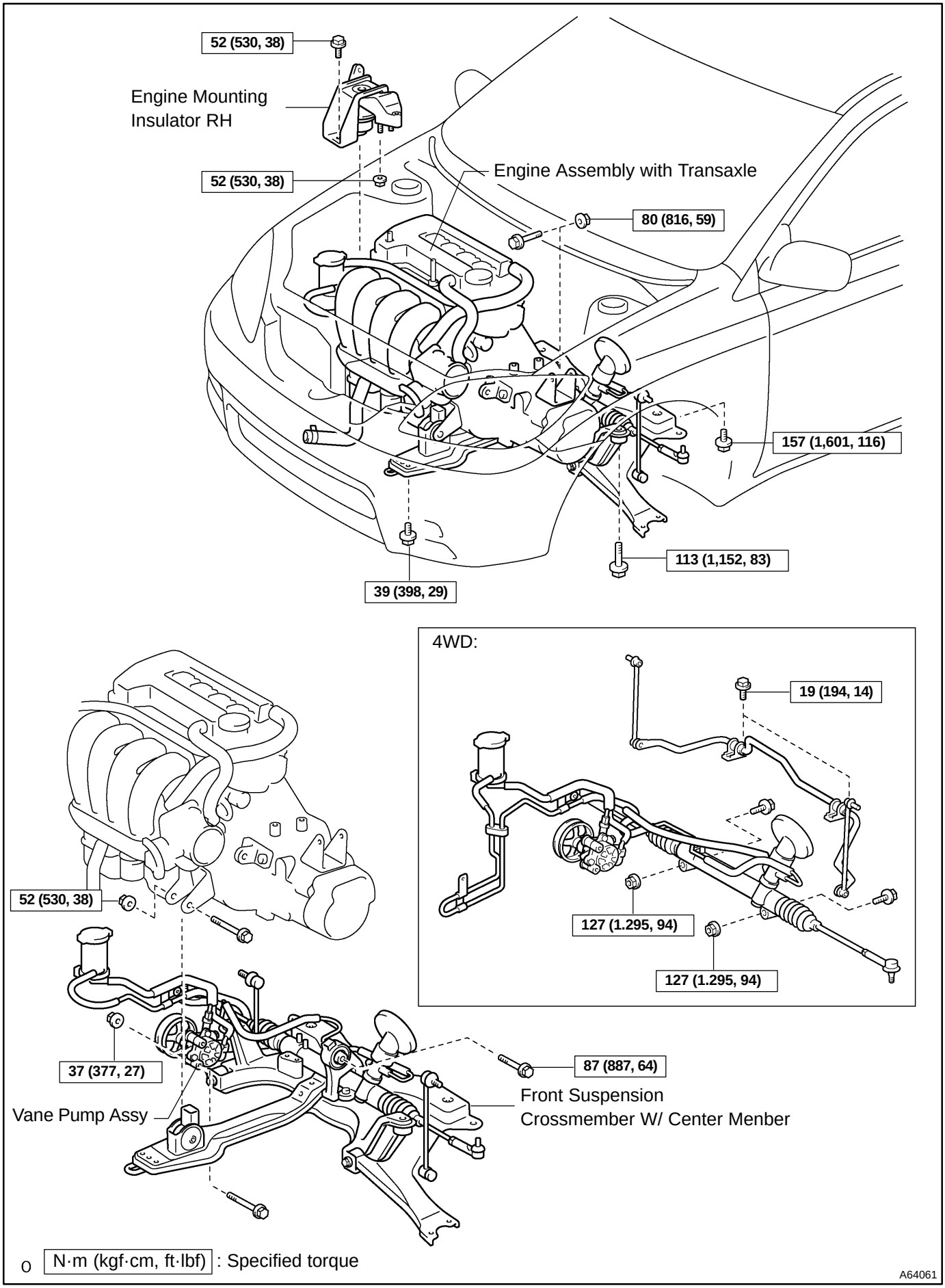
52 (530, 38)
Engine Mounting Insulator RH
52 (530, 38)
Engine Assembly with Transaxle
80 (816, 59)
157 (1,601, 116)
113 (1,152, 83)
39 (398, 29)
4WD:
19 (194, 14)
127 (1.295, 94)
127 (1.295, 94)
52 (530, 38)
37 (377, 27)
87 (887, 64)
Front Suspension Crossmember W/ Center Menber
Vane Pump Assy
o N·m (kgf·cm, ft·lbf) : Specified torque
A64061

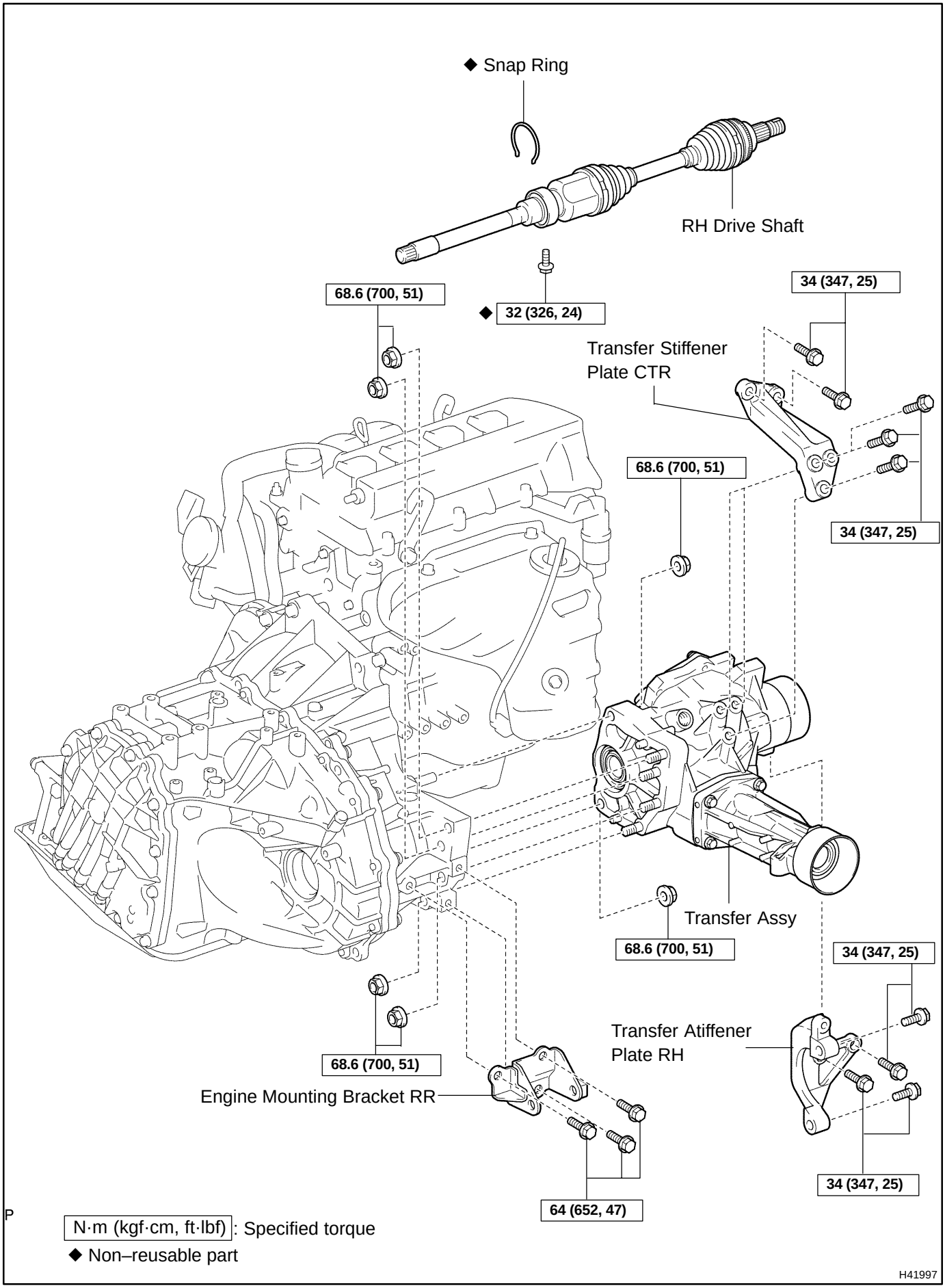
◆ Snap Ring
RH Drive Shaft
68.6 (700, 51)
◆ 32 (326, 24)
34 (347, 25)
Transfer Stiffener Plate CTR
68.6 (700, 51)
34 (347, 25)
Transfer Assy
68.6 (700, 51)
34 (347, 25)
Transfer Atiffener Plate RH
68.6 (700, 51)
Engine Mounting Bracket RR
34 (347, 25)
64 (652, 47)
N·m (kgf·cm, ft·lbf): Specified torque
◆ Non–reusable part
H41997

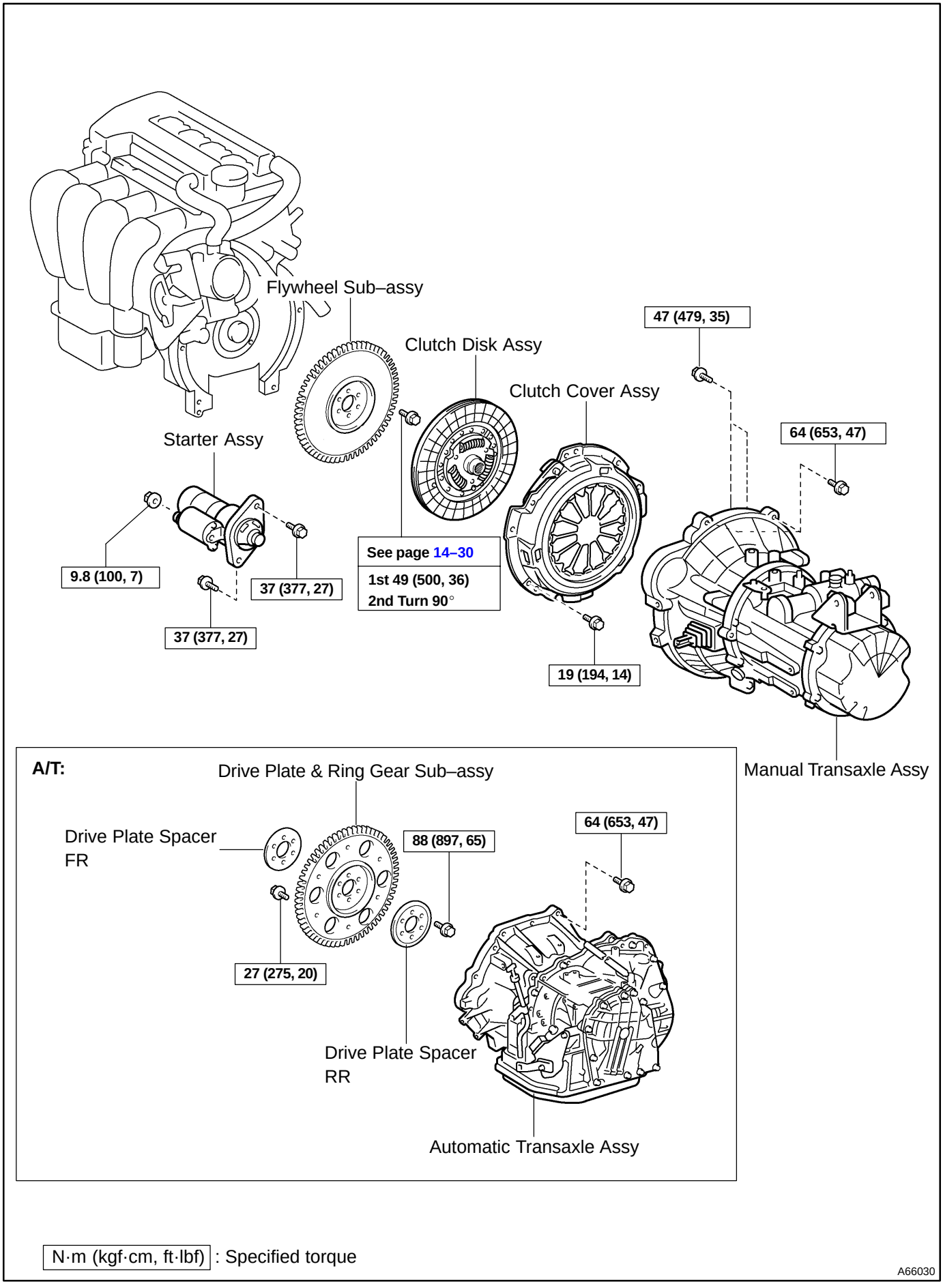
Flywheel Sub–assy
Clutch Disk Assy
Clutch Cover Assy
47 (479, 35)
64 (653, 47)
Starter Assy
9.8 (100, 7)
37 (377, 27)
37 (377, 27)
See page 14–30
1st 49 (500, 36)
2nd Turn 90°
19 (194, 14)
Manual Transaxle Assy
A/T:
Drive Plate & Ring Gear Sub–assy
Drive Plate Spacer FR
88 (897, 65)
64 (653, 47)
27 (275, 20)
Drive Plate Spacer RR
Automatic Transaxle Assy
N·m (kgf·cm, ft·lbf) : Specified torque
A66030

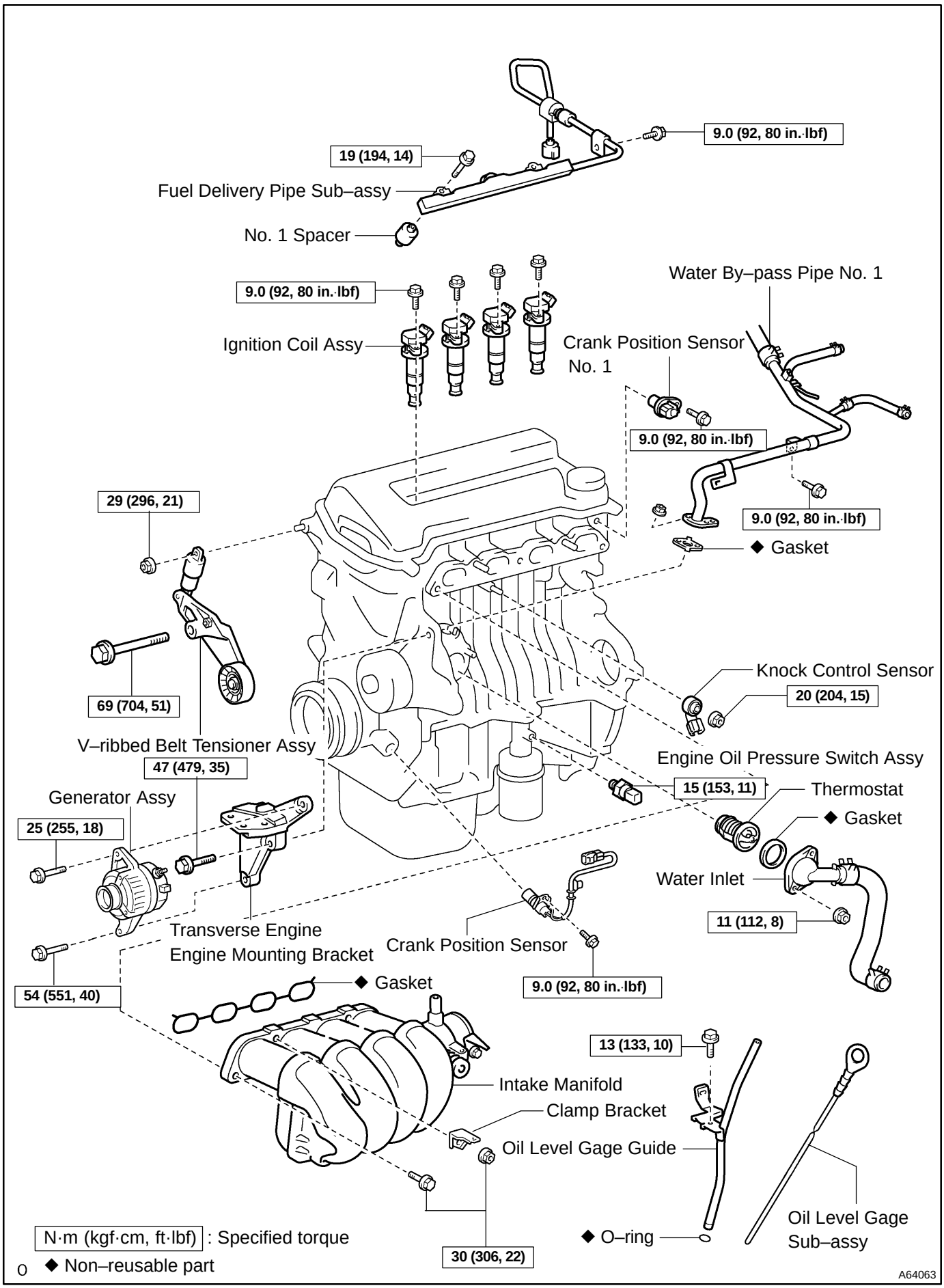
9.0 (92, 80 in.·lbf)
19 (194, 14)
Fuel Delivery Pipe Sub–assy
No. 1 Spacer
9.0 (92, 80 in.·lbf)
Ignition Coil Assy
Water By–pass Pipe No. 1
Crank Position Sensor No. 1
9.0 (92, 80 in.·lbf)
9.0 (92, 80 in.·lbf)
◆ Gasket
29 (296, 21)
69 (704, 51)
V–ribbed Belt Tensioner Assy
Knock Control Sensor
20 (204, 15)
Engine Oil Pressure Switch Assy
15 (153, 11)
Thermostat
◆ Gasket
47 (479, 35)
Generator Assy
25 (255, 18)
Water Inlet
11 (112, 8)
Transverse Engine Engine Mounting Bracket
Crank Position Sensor
9.0 (92, 80 in.·lbf)
54 (551, 40)
◆ Gasket
13 (133, 10)
Intake Manifold
Clamp Bracket
Oil Level Gage Guide
Oil Level Gage Sub–assy
◆ O–ring
30 (306, 22)
N·m (kgf·cm, ft·lbf) : Specified torque
◆ Non–reusable part
A64063

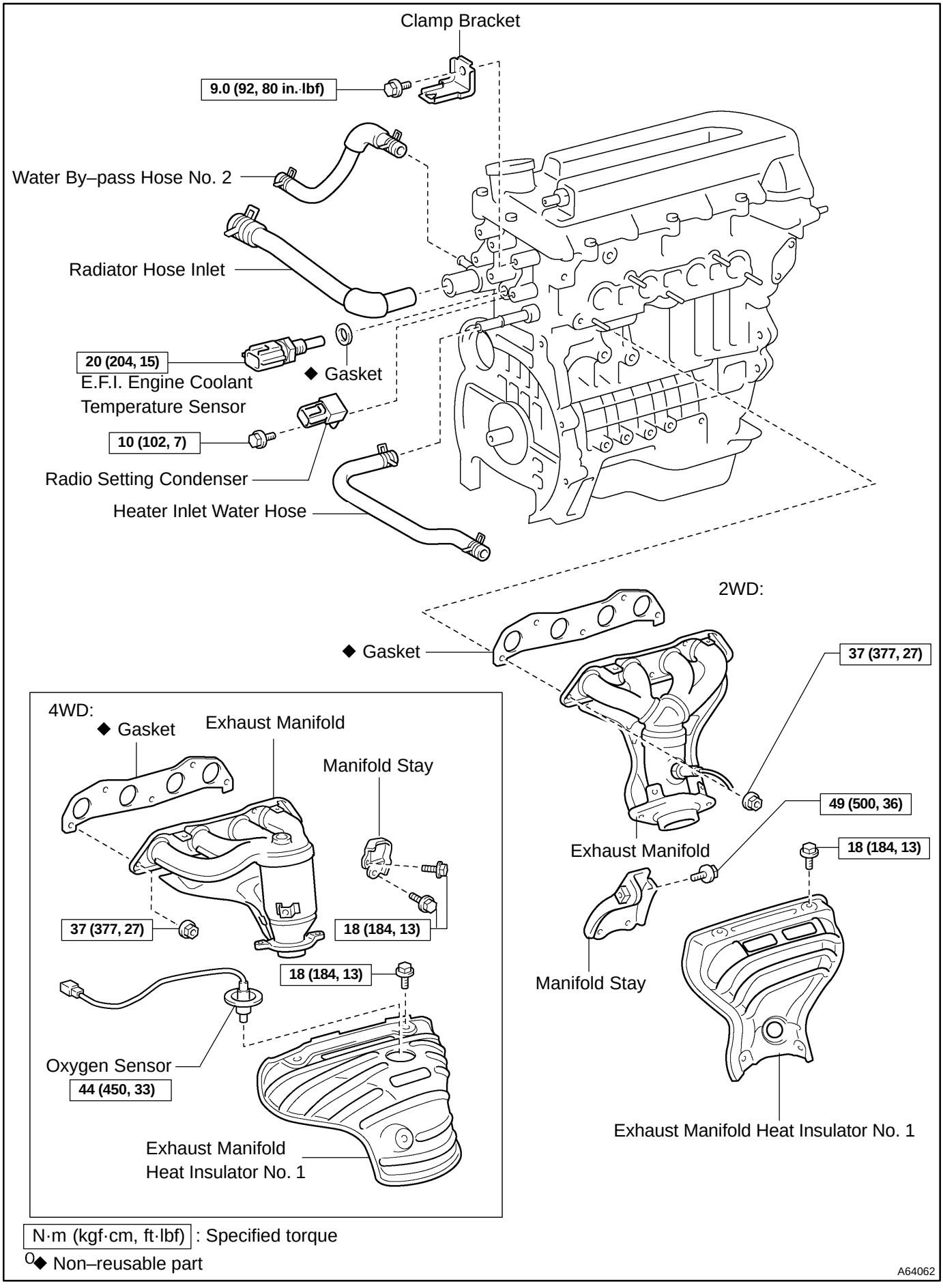
Clamp Bracket
9.0 (92, 80 in.·lbf)
Water By–pass Hose No. 2
Radiator Hose Inlet
20 (204, 15)
E.F.I. Engine Coolant Temperature Sensor
◆ Gasket
10 (102, 7)
Radio Setting Condenser
Heater Inlet Water Hose
2WD:
◆ Gasket
37 (377, 27)
49 (500, 36)
Exhaust Manifold
18 (184, 13)
Manifold Stay
Exhaust Manifold Heat Insulator No. 1
4WD:
◆ Gasket
Exhaust Manifold
Manifold Stay
37 (377, 27)
18 (184, 13)
18 (184, 13)
Oxygen Sensor
44 (450, 33)
Exhaust Manifold Heat Insulator No. 1
N·m (kgf·cm, ft·lbf) : Specified torque
◆ Non–reusable part
A64062

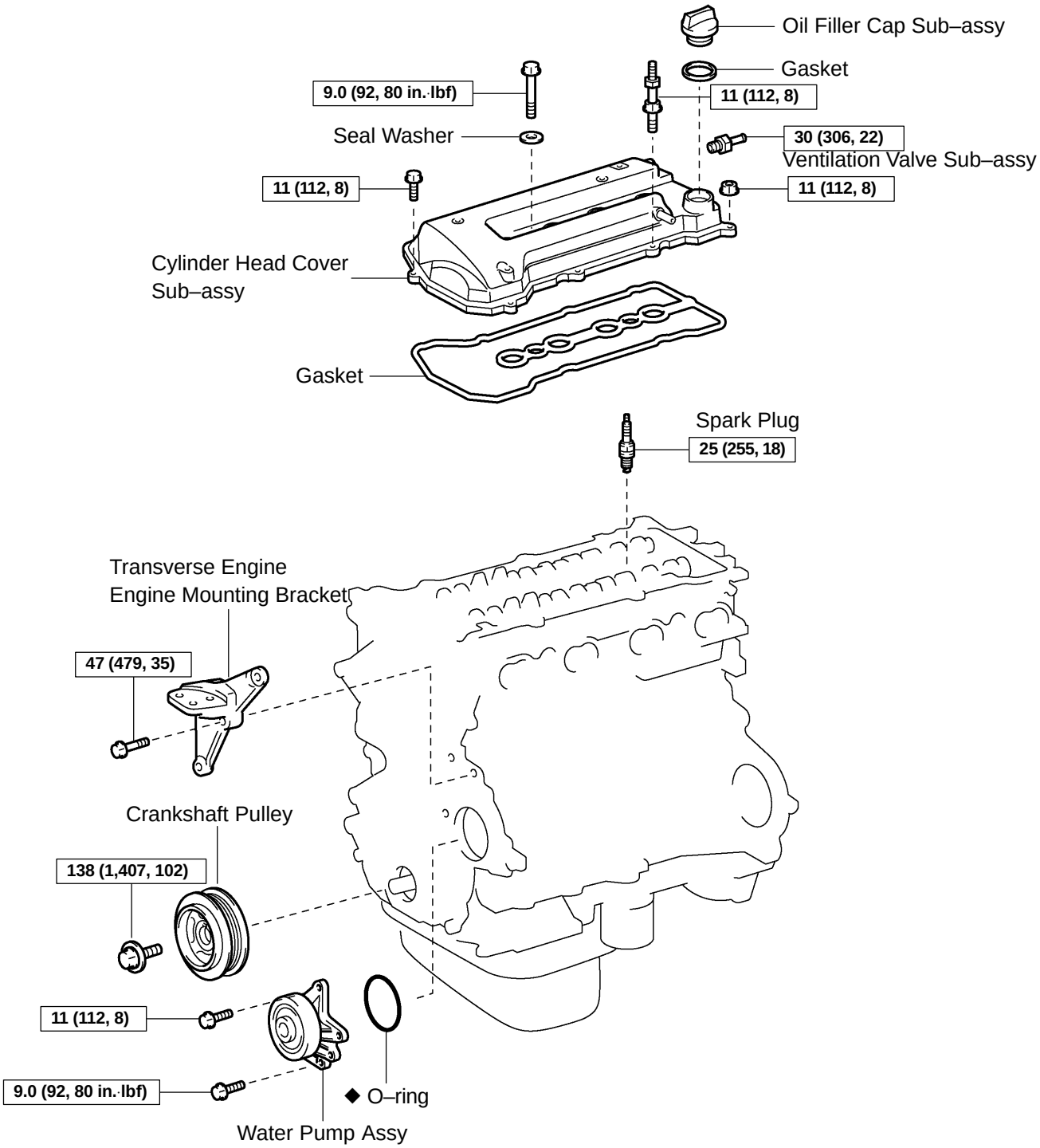

N·m (kgf·cm, ft·lbf) : Specified torque

◆ Non–reusable part

A64054

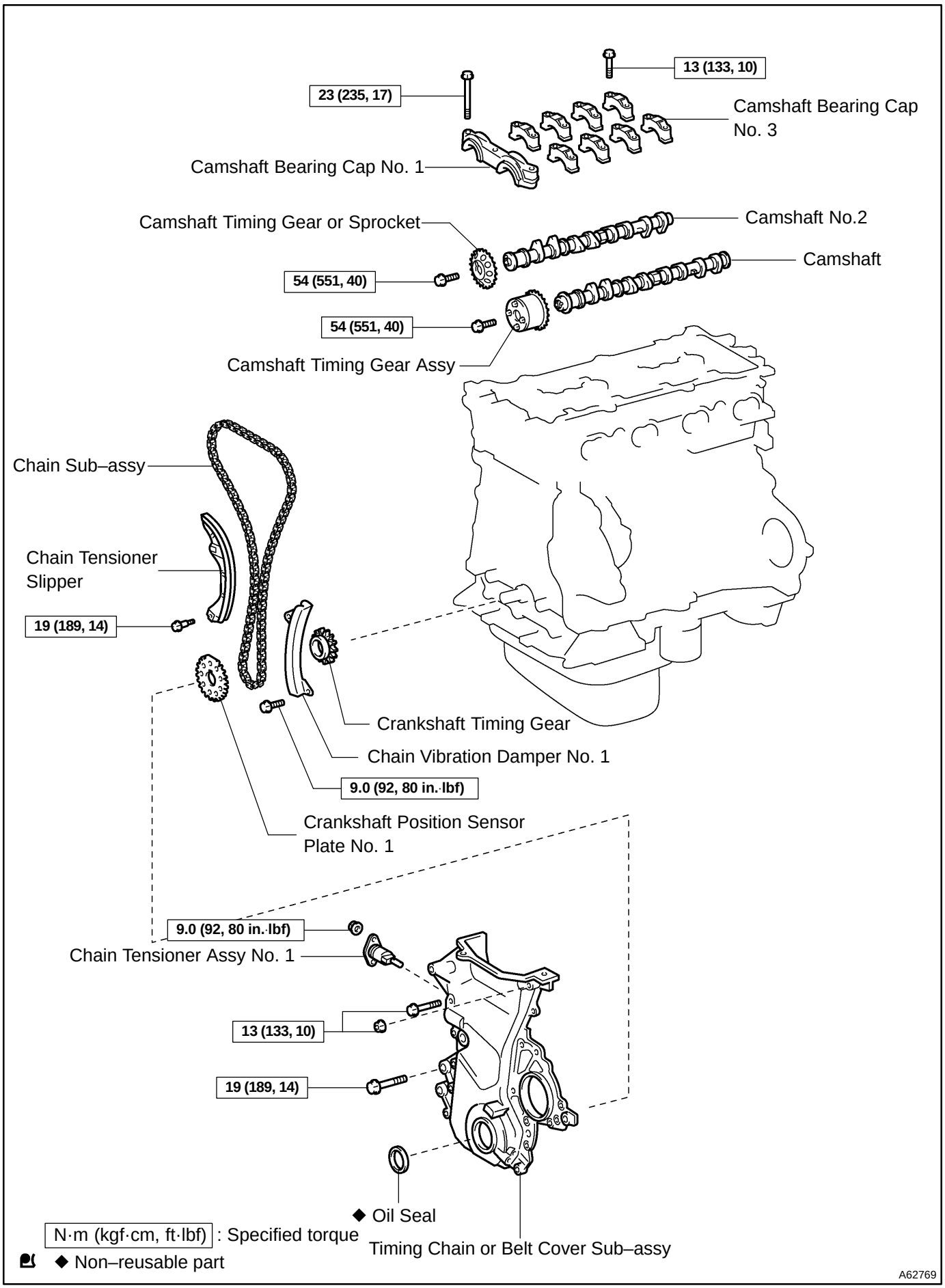
13 (133, 10)
23 (235, 17)
Camshaft Bearing Cap No. 3
Camshaft Bearing Cap No. 1
Camshaft Timing Gear or Sprocket
Camshaft No.2
Camshaft
54 (551, 40)
54 (551, 40)
Camshaft Timing Gear Assy
Chain Sub–assy
Chain Tensioner Slipper
19 (189, 14)
Crankshaft Timing Gear
Chain Vibration Damper No. 1
9.0 (92, 80 in.·lbf)
Crankshaft Position Sensor Plate No. 1
9.0 (92, 80 in.·lbf)
Chain Tensioner Assy No. 1
13 (133, 10)
19 (189, 14)
◆ Oil Seal
N·m (kgf·cm, ft·lbf) : Specified torque
◆ Non–reusable part
Timing Chain or Belt Cover Sub–assy
A62769

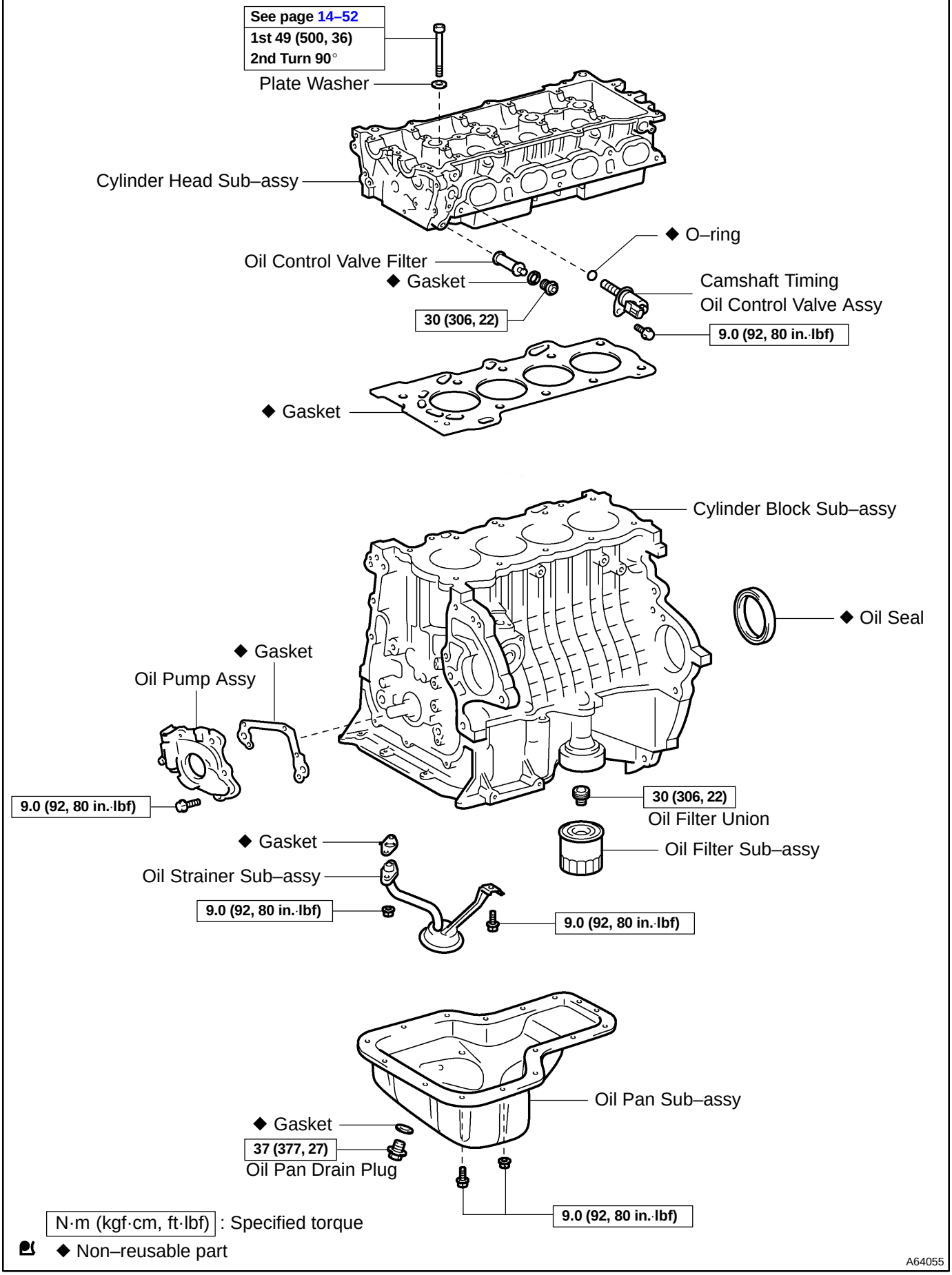
See page 14–52
1st 49 (500, 36)
2nd Turn 90°
Plate Washer
Cylinder Head Sub–assy
◆ O–ring
Oil Control Valve Filter
◆ Gasket
Camshaft Timing
Oil Control Valve Assy
30 (306, 22)
9.0 (92, 80 in.·lbf)
◆ Gasket
Cylinder Block Sub–assy
◆ Oil Seal
◆ Gasket
Oil Pump Assy
9.0 (92, 80 in.·lbf)
30 (306, 22)
Oil Filter Union
◆ Gasket
Oil Filter Sub–assy
Oil Strainer Sub–assy
9.0 (92, 80 in.·lbf)
9.0 (92, 80 in.·lbf)
Oil Pan Sub–assy
◆ Gasket
37 (377, 27)
Oil Pan Drain Plug
9.0 (92, 80 in.·lbf)
N·m (kgf·cm, ft·lbf) : Specified torque
◆ Non–reusable part
A64055

140QU–01

OVERHAUL

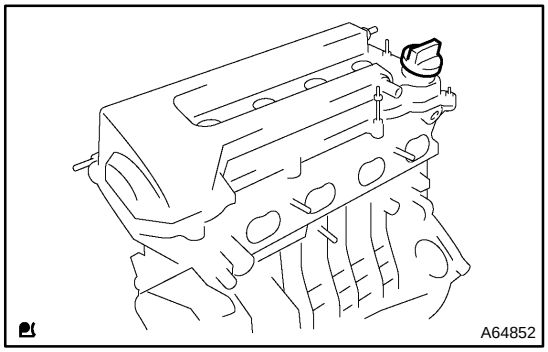

1. REMOVE OIL FILLER CAP SUB–ASSY

(a) Remove the oil filler cap from the cylinder head cover.

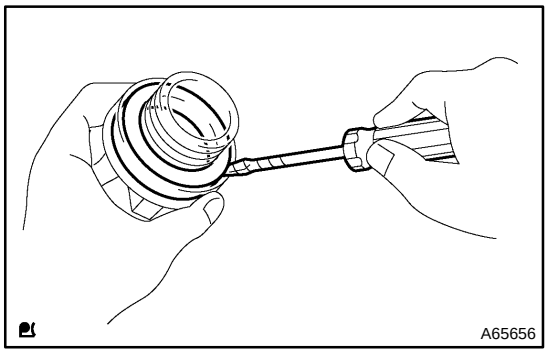

2. REMOVE OIL FILLER CAP GASKET

(a) Using a screwdriver, remove the gasket from the oil filler cap.

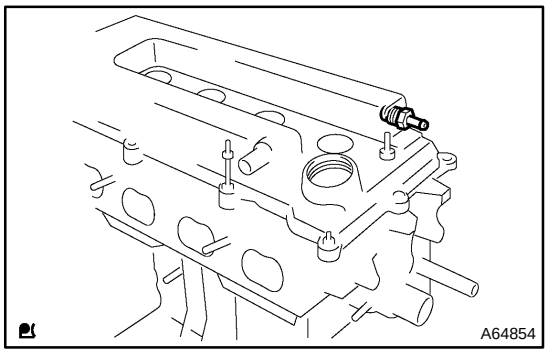

3. REMOVE VENTILATION VALVE SUB–ASSY

(a) Remove the ventilation valve from the cylinder head cover.

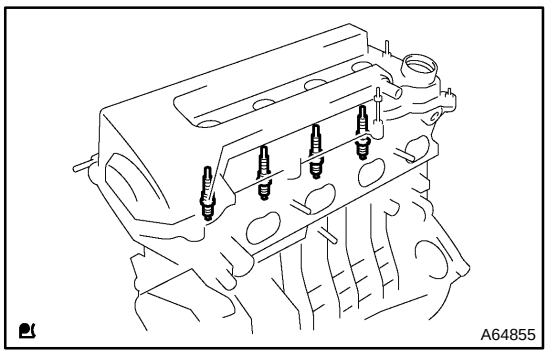

4. REMOVE SPARK PLUG

(a) Using a spark plug wrench, remove the spark plugs.

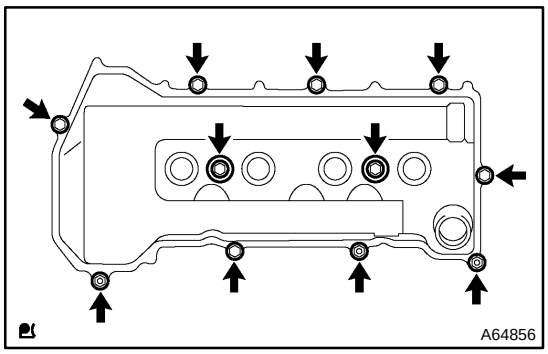

5. REMOVE CYLINDER HEAD COVER SUB–ASSY

(a) Remove the 9 bolts, 2 seal washers, 2 nuts and cylinder head cover.

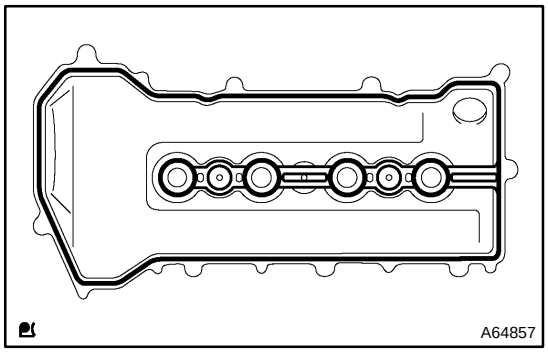

6. REMOVE CYLINDER HEAD COVER GASKET

(a) Remove the gasket from the cylinder head cover.

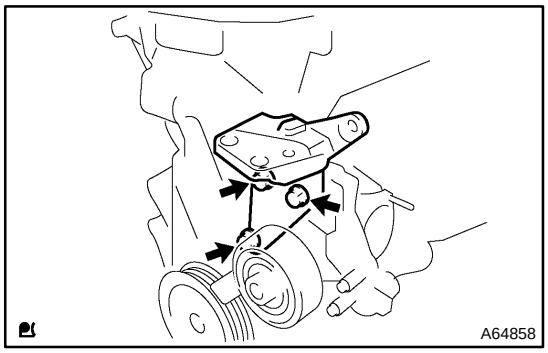

7. REMOVE TRANSVERSE ENGINE ENGINE MOUNTING BRACKET

(a) Remove the 3 bolts and transverse engine engine mounting bracket.

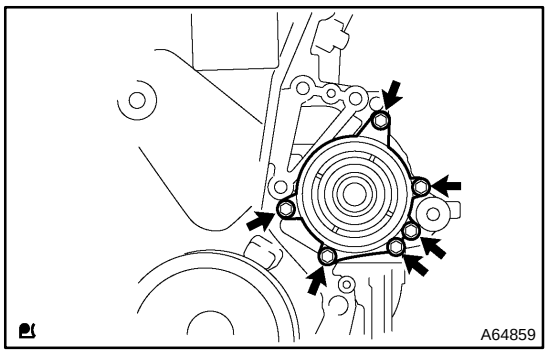

8. REMOVE WATER PUMP ASSY

(a) Remove the 6 bolts and water pump.

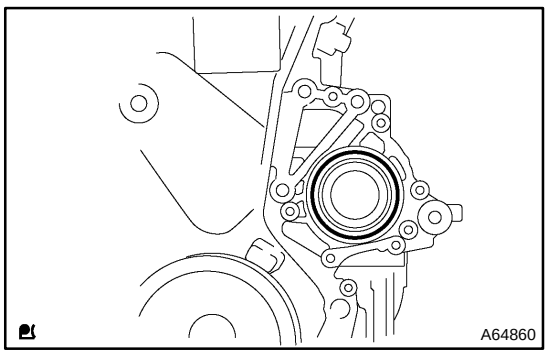

9. REMOVE WATER PUMP O–RING

(a) Remove an O–ring from the timing chain cover.

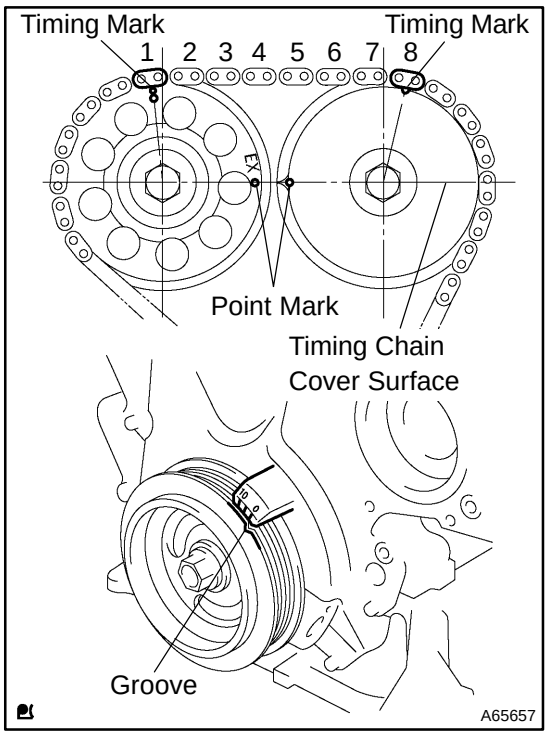

10. REMOVE CRANKSHAFT PULLEY

(a) Set No. 1 cylinder to TDC/compression.
  (1) Turn the crankshaft pulley, and align its groove with timing mark ”0” of the timing chain cover.
  (2) Check that the point marks of the camshaft timing gears are in straight line on the timing chain cover surface as shown in the illustration.

HINT:
If not, turn the crankshaft 1 revolution (360°) and align the marks as above.

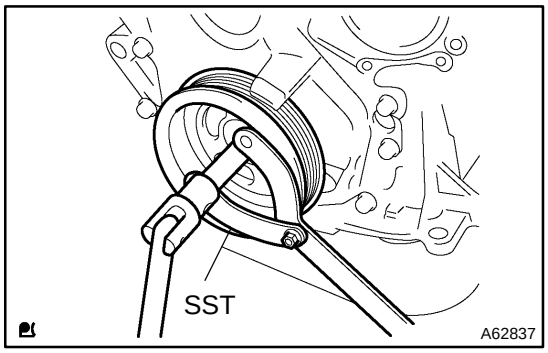

(b) Using SST, remove the crankshaft pulley bolt.
  SST 09960–10010 (09962–01000, 09963–01000)
(c) Remove the crankshaft pulley from the crankshaft.

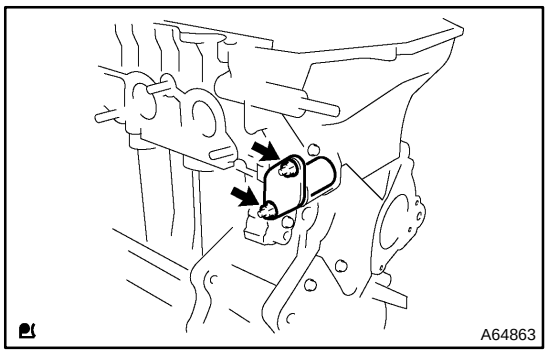

11. REMOVE CHAIN TENSIONER ASSY NO.1

(a) Remove the 2 nuts and chain tensioner.

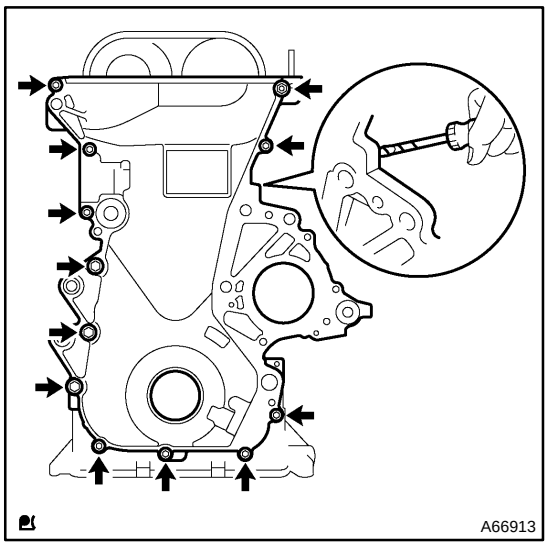

12. REMOVE TIMING CHAIN OR BELT COVER SUB–ASSY

(a) Remove the 11 bolts and nut.

(b) Remove the timing chain cover by prying the portions between the timing chain cover and cylinder head and cylinder block with a screwdriver.

NOTICE:

Be careful not to damage the contact surfaces of the timing chain cover, cylinder head and cylinder block.

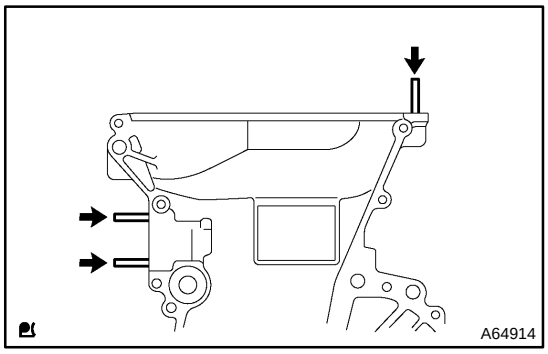

(c) Using a torx socket wrench E5, remove the 3 stud bolts.

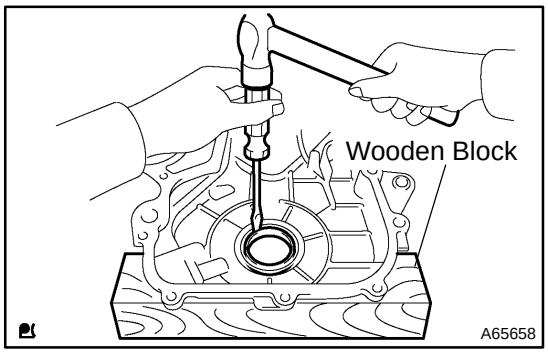

13. REMOVE TIMING GEAR COVER OIL SEAL

(a) Place the timing chain cover on wooden blocks.

(b) Using a screwdriver, remove the oil seal.

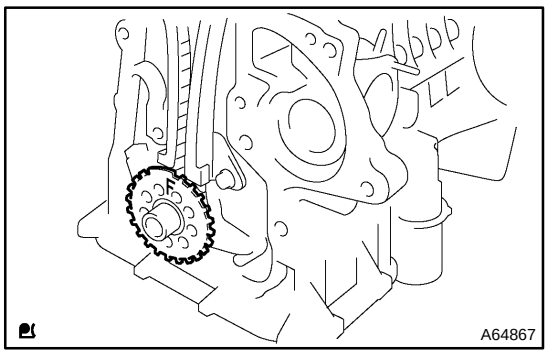

14. REMOVE CRANKSHAFT POSITION SENSOR PLATE NO.1

(a) Remove the crankshaft position sensor plate from the crankshaft.

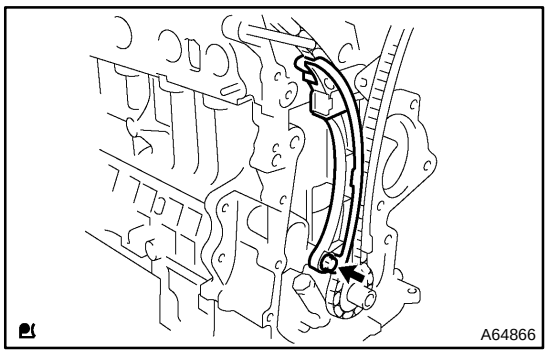

15. REMOVE CHAIN TENSIONER SLIPPER

(a) Remove the bolt and chain tensioner slipper.

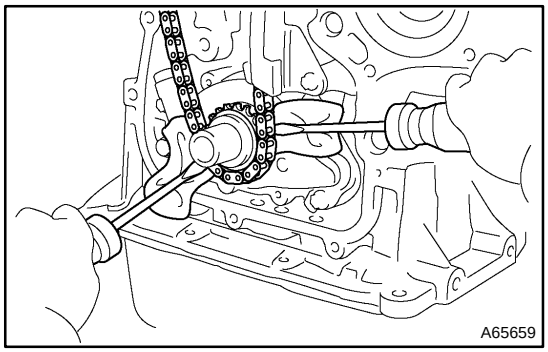

16. REMOVE CHAIN SUB–ASSY

(a) Using the 2 screwdrivers, pry out the chain with the crankshaft timing gear as shown in the illustration.

NOTICE:

- **Put shop rag to protect the engine.**
- **In case of revolving the camshafts with the chain off the gears, turn the crankshaft 1/4 revolution for valves not to touch the pistons.**

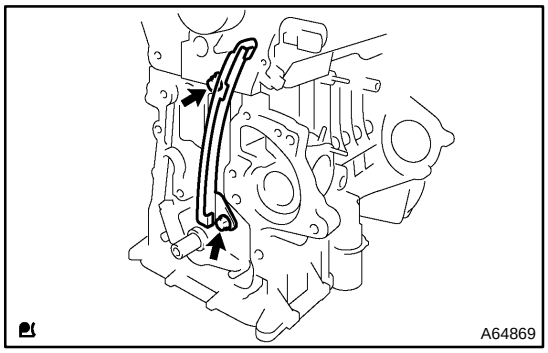

17. REMOVE CHAIN VIBRATION DAMPER NO.1

(a) Remove the 2 bolts and chain vibration damper.

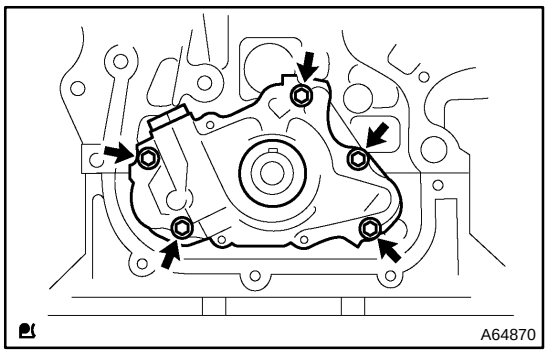

18. REMOVE OIL PUMP ASSY

(a) Remove the 5 bolts and oil pump.

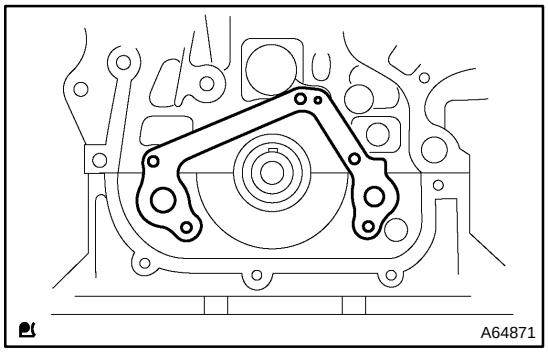

19. REMOVE OIL PUMP GASKET

(a) Remove the gasket from the cylinder block.

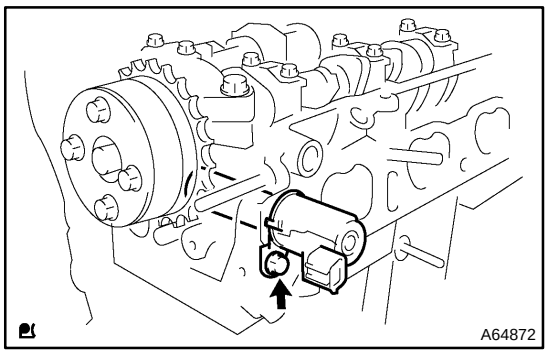

20. REMOVE CAMSHAFT TIMING OIL CONTROL VALVE ASSY

(a) Remove the bolt and camshaft timing oil control valve.

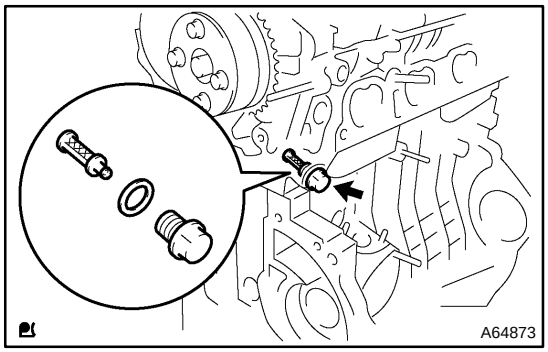

21. REMOVE OIL CONTROL VALVE FILTER

(a) Remove the bolt with gasket and oil control valve filter.

(b) Remove the gasket and oil control valve filter from the bolt.

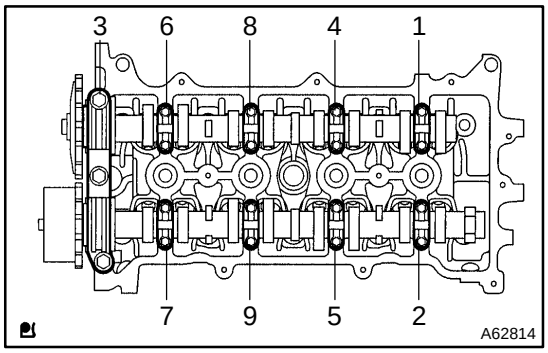

22. REMOVE CAMSHAFT

(a) Uniformly loosen and remove the 19 bolts, in several passes, in the sequence shown, and remove the 9 bearing caps.

(b) Remove the 2 camshafts from the cylinder head.

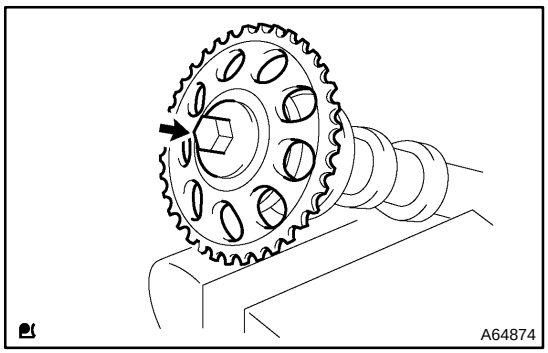

23. REMOVE CAMSHAFT TIMING GEAR OR SPROCKET

(a) Grip the camshaft with a vice, and remove the bolt and camshaft timing gear.

NOTICE:

Be careful not to damage the camshaft.

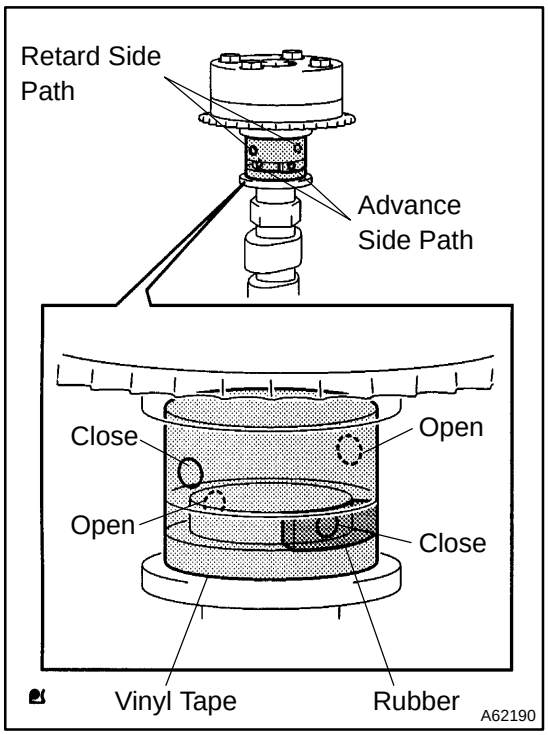

24. INSPECT CAMSHAFT TIMING GEAR ASSY

(a) Check the lock of camshaft timing gear.

(1) Grip the camshaft with a vice, and confirm the camshaft timing gear is locked.

NOTICE:

Be careful not to damage the camshaft.

(b) Release lock pin.

(1) Cover 4 oil paths of cam journal with vinyl tape as shown in the illustration.

HINT:

Two advance side paths are provided in the groove of the camshaft. Plug one of the path with a rubber piece.

(2) Break through the tapes of the advance side path and the retard side path on the opposite side of the groove.

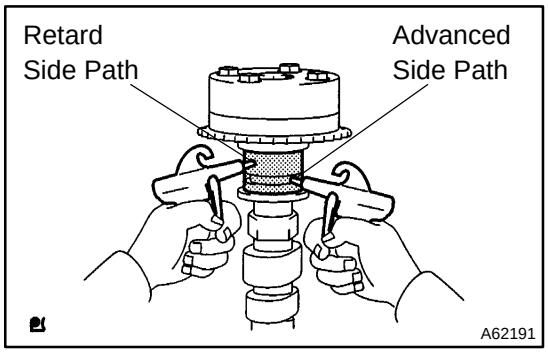

(3) Put air pressure into two broken paths (the advance side path and the retard side path) with about 150 kPa {1.5 kgf·cm^2}.

CAUTION:

Cover the paths with shop rag to avoid oil splashing.

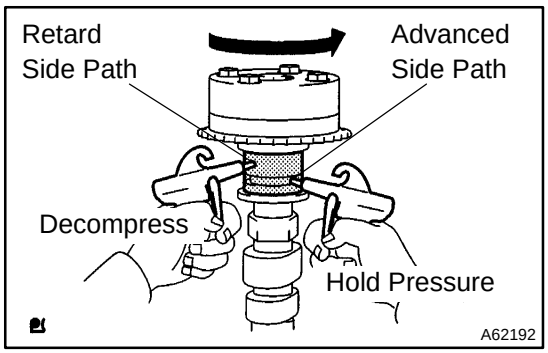

(4) Confirm if the camshaft timing gear assembly revolves in the timing advance direction when weakening the air pressure of the timing retard path.

HINT:

The lock pin is released, and camshaft timing gear, revolves in the advance direction.

(5) When the camshaft timing gear comes to the most advanced position, take out the air pressure of the timing retard side path, and then, take out that of timing advance side path.

CAUTION:

Camshaft timing assembly gear occasionally shifts to the retard side abruptly, if the air compression of the advanced side path is released before retard side path. It often causes the breakage of the lock pin.

(c) Check smooth revolution
  (1) Revolve the camshaft timing gear assembly within the movable range except for the most retarded position several times, and check the smooth revolution.

CAUTION:
Be sure to perform this check by hand, instead of air pressure.

(d) Check the lock in the most retarded position.
  (1) Confirm that the camshaft timing gear assembly is locked at the most retarded position.

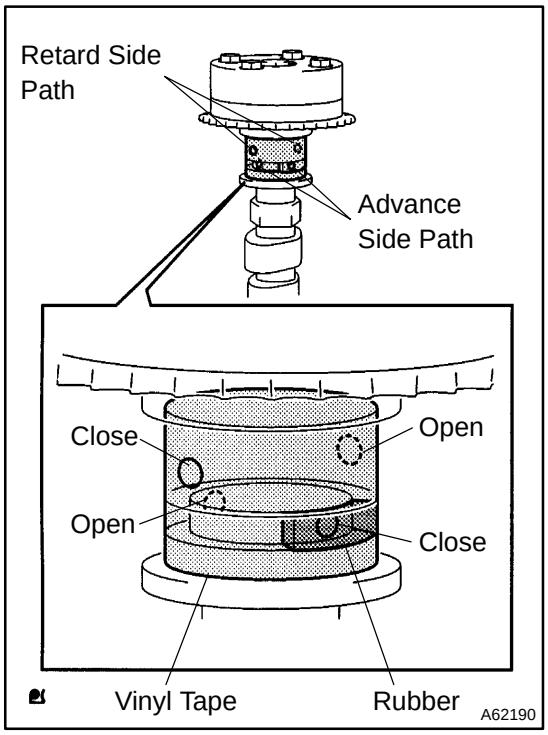

25. REMOVE CAMSHAFT TIMING GEAR ASSY

(a) Grip the camshaft with a vice, and confirm that the gear is locked.

CAUTION:
Be careful not to damage the camshaft.

(b) Cover 4 oil paths of cam journal with vinyl tape as shown in the illustration.

HINT:
Two advance side paths are provided in the groove of the camshaft. Plug one of the path with a rubber piece.

(c) Break through the tapes of the advance side path and the retard side path on the opposite side of the groove.

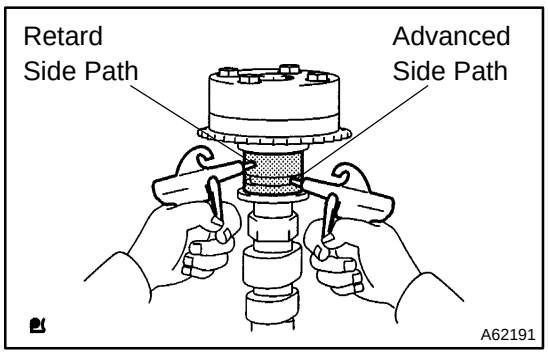

(d) Put air pressure into two broken paths (the advance side path and the retard side path) with about 150 kPa {1.5 kgf/cm^2}.

CAUTION:
Cover the paths with shop rag to avoid oil splashing.

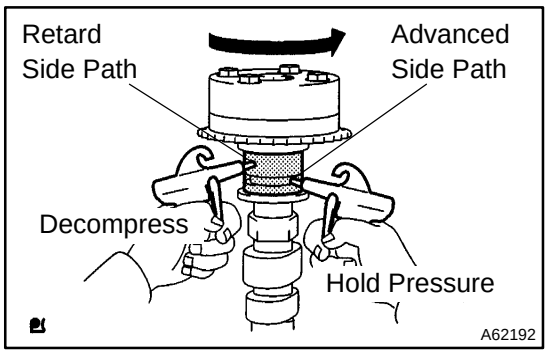

(e) Confirm if the camshaft timing gear assembly revolves in the timing advance direction when weakening the air pressure of the timing retard path.

HINT:

The lock pin is released, and camshaft timing gear revolves in the advance direction.

(f) When the camshaft timing gear comes to the most advanced position, take out the air pressure of the timing retard side path, and then, takeout that of timing advance side path.

CAUTION:

Camshaft timing gear assembly occasionally shifts to the retard side abruptly, if the air compression of the advanced side path is released before retard side paths. It often causes the breakage of the lock pin.

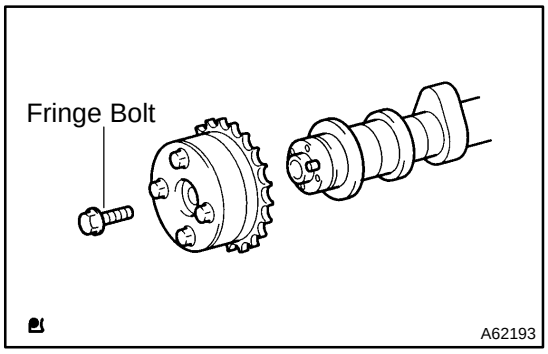

(g) Remove the fringe bolt and camshaft timing gear.

NOTICE:

- **Be sure not to remove the other 4 bolts.**
- **In case of reusing the camshaft timing gear, release the strait pin locking first, and then install the gear.**

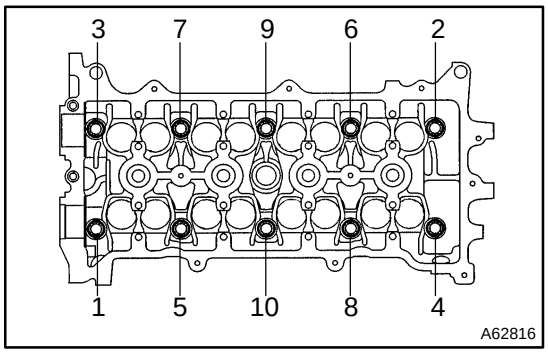

26. REMOVE CYLINDER HEAD SUB–ASSY

(a) Using a bi–hexagon wrench 10, uniformly loosen and remove the 10 cylinder head bolts, in several passes, in the sequence shown, and remove the 10 cylinder head bolts and 10 plate washers.

NOTICE:

- **Be careful not to drop plate washers into the cylinder head.**
- **Head warpage or cracking could result from removing bolts in an incorrect order.**

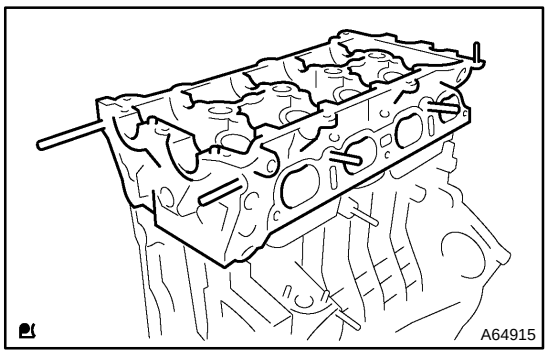

(b) Remove the cylinder head from the cylinder block.

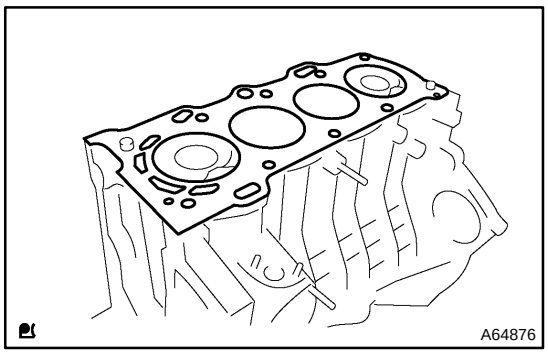

27. REMOVE CYLINDER HEAD GASKET

(a) Remove the cylinder head gasket from the cylinder block.

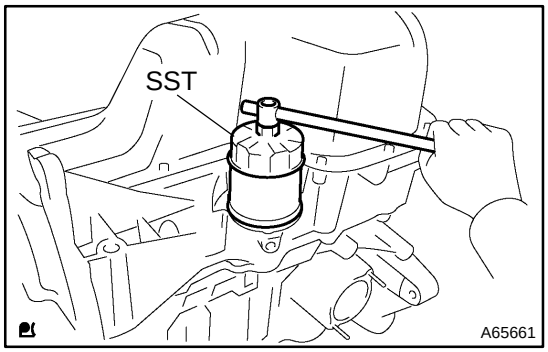

28. REMOVE OIL FILTER SUB–ASSY

(a) Using SST, remove the oil filter.
SST 09228–06501

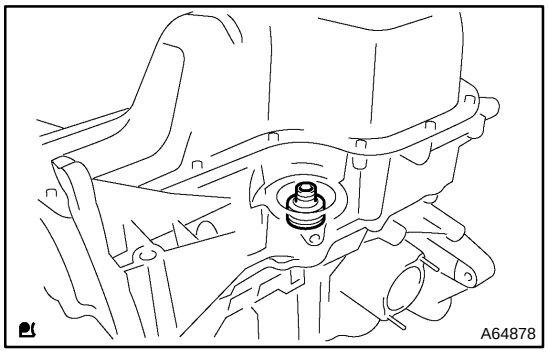

29. REMOVE OIL FILTER UNION

(a) Using a socket hexagon wrench 12, remove the oil filter union.

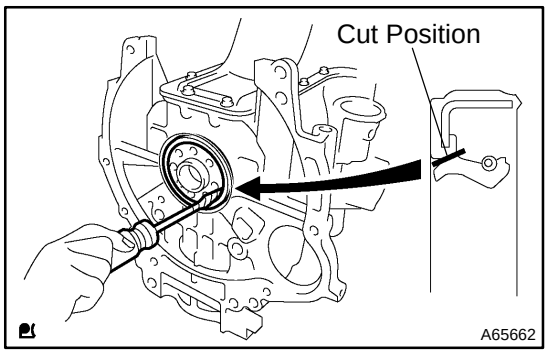

30. REMOVE ENGINE REAR OIL SEAL

(a) Using a knife, cut off the oil seal lip.

(b) Using a screwdriver with its tip taped, pry out the oil seal.

NOTICE:

After the removal, check if the crankshaft is not damaged. If there is, mend it with a sandpaper (# 400).

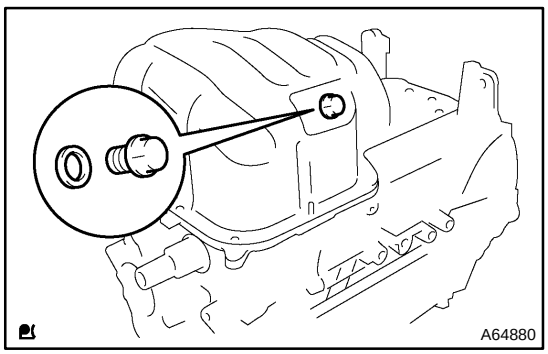

31. REMOVE OIL PAN DRAIN PLUG

(a) Remove the oil pan drain plug and gasket from the oil pan.

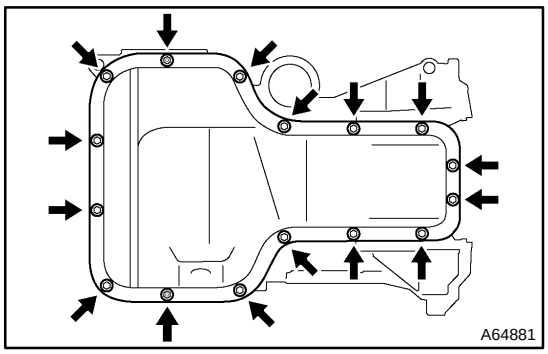

32. REMOVE OIL PAN SUB–ASSY

(a) Remove the 14 bolts and 2 nuts.

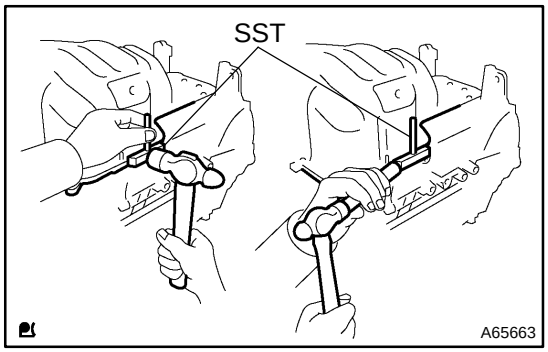

(b) Insert the blade of SST between the bearing cap and oil pan, and cut off applied sealer and remove the oil pan.
SST 09032–00100

NOTICE:

Be careful not to damage the oil pan contact surface of the bearing cap and the oil pan.

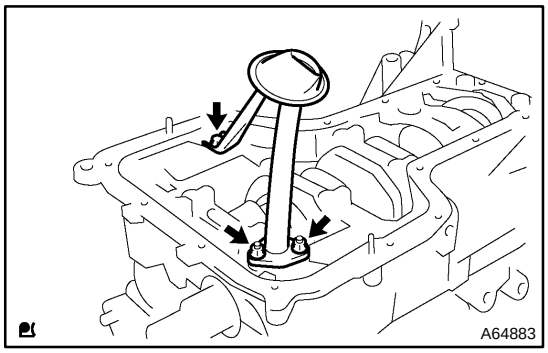

33. REMOVE OIL STRAINER SUB–ASSY

(a) Remove the bolt, 2 nuts and oil strainer.

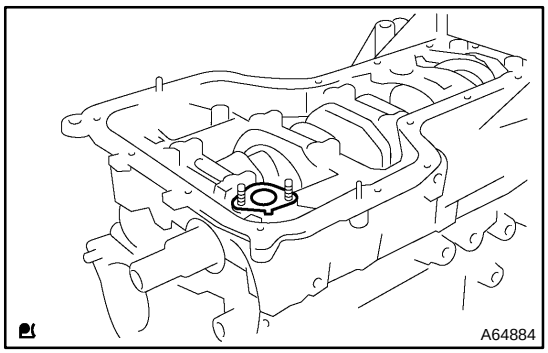

34. REMOVE OIL STRAINER FLANGE GASKET

(a) Remove the gasket from the bearing cap.

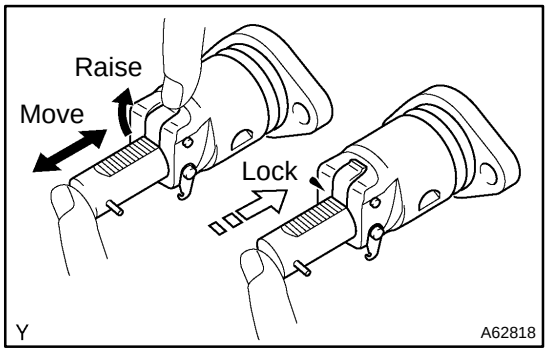

35. INSPECT CHAIN TENSIONER ASSY NO.1

(a) Check that the plunger moves smoothly when the ratchet pawl is raised with your finger.

(b) Release the ratchet pawl and check that the plunger is locked in place by the ratchet pawl and does not move when pushed with your finger.

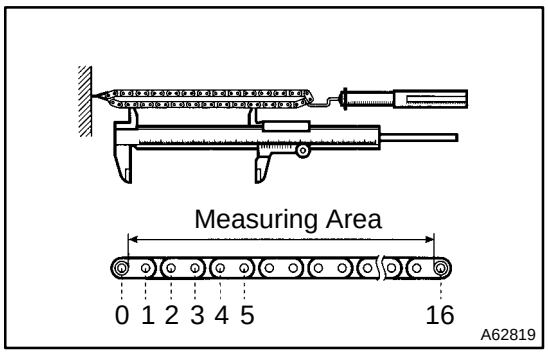

36. INSPECT CHAIN SUB–ASSY

(a) Using a spring tension gauge and vernier calipers, pull the timing chain with 140 N (4.3 kgf, 315 lb) and measure the length of it.

Maximum chain elongation: 122.6 mm (4.827 in.)

If the chain elongation is greater than maximum, replace the chain.

HINT:

Make the same measurements pulling at 3 or more places selected at random.

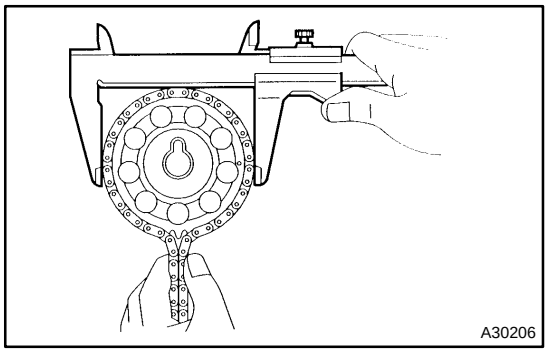

37. INSPECT CAMSHAFT TIMING GEAR OR SPROCKET

(a) Wrap the chain around the camshaft timing gear.

(b) Using a vernier calipers, measure the camshaft timing gear diameter with the chain.

Minimum gear diameter (w/ chain): 97.3 mm (3.831 in.)

NOTICE:

Vernier calipers must contact the chain rollers for measuring.

If the gear diameter is less than minimum, replace the chain and camshaft timing gear.

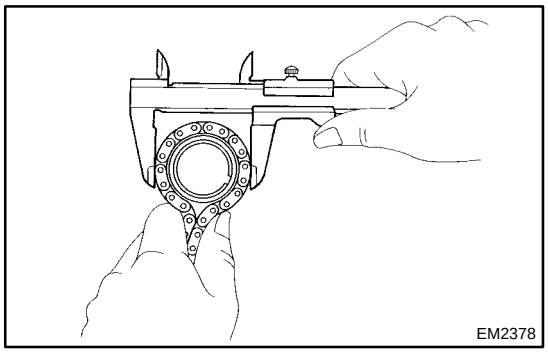

38. INSPECT CRANKSHAFT TIMING GEAR OR SPROCKET

(a) Wrap the chain around the crankshaft timing gear.

(b) Using a vernier calipers, measure the crankshaft timing gear diameter with the chain.

Minimum gear diameter (w/ chain): 51.6 mm (2.032 in.)

NOTICE:

Vernier calipers must contact the chain rollers for the measuring.

If the gear diameter is less than minimum, replace the chain and crankshaft timing gear.

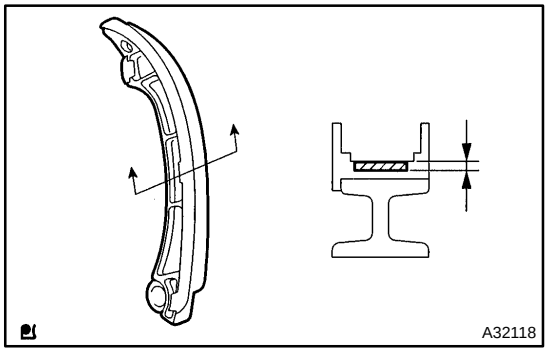

39. INSPECT CHAIN TENSIONER SLIPPER

(a) Using a vernier calipers, measure the chain tensioner slipper wears.

Maximum wear: 1.0 mm (0.039 in.)

If the wear is greater than maximum, replace the chain tensioner slipper.

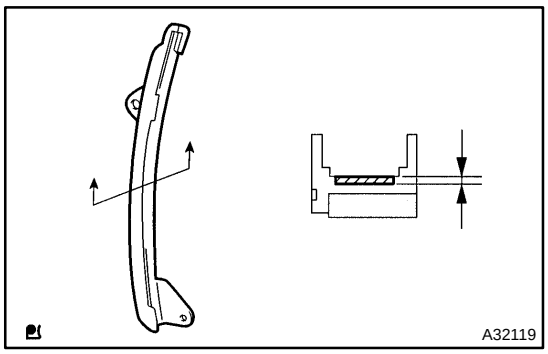

40. INSPECT CHAIN VIBRATION DAMPER NO.1

(a) Using a vernier calipers, measure the vibration damper wears.

Maximum wear: 1.0 mm (0.039 in.)

If the wear is greater than maximum, replace the chain vibration damper.

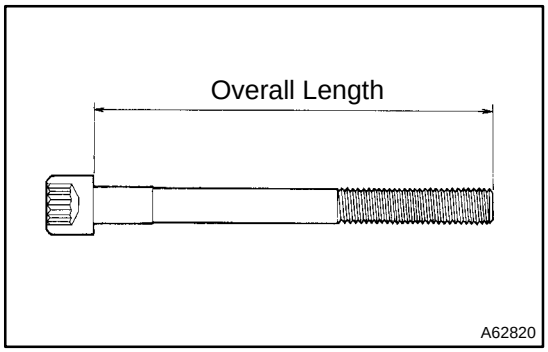

41. INSPECT CYLINDER HEAD SET BOLT

(a) Using a vernier calipers, measure the length of cylinder head bolts from the seat to the end.

Standard bolt length:
146.8 – 148.2 mm (5.780 – 5.835 in.)
Maximum bolt length: 148.5 mm (5.846 in.)

If the bolt length is greater than maximum, replace the cylinder head set bolt.

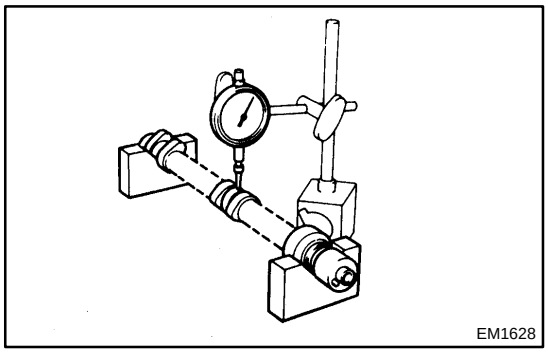

42. INSPECT CAMSHAFT

(a) Inspect camshaft for runout.
  (1) Place the camshaft on V–blocks.
  (2) Using a dial indicator, measure the circle runout at the center journal.

Maximum circle runout: 0.03 mm (0.0012 in.)

If the circle runout is greater than maximum, replace the camshaft.

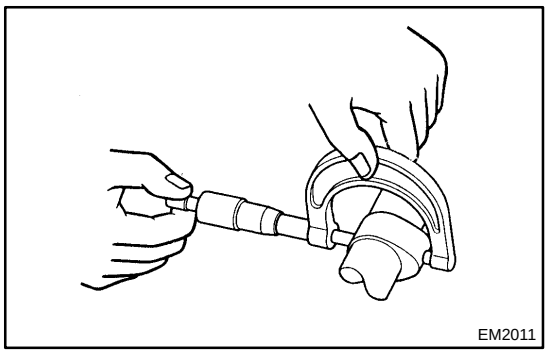

(b) Inspect cam lobes.
  (1) Using a micrometer, measure the cam lobe height.

Standard cam lobe height:
Intake 44.333 – 44.433 mm (1.7454 – 1.7493 in.)
Exhaust 43.761 – 43.861 mm (1.7229 – 1.7268 in.)
Minimum cam lobe height:
Intake 44.18 mm (1.7394 in.)
Exhaust 43.61 mm (1.7169 in.)

If the cam lob height is less than minimum, replace the camshaft.

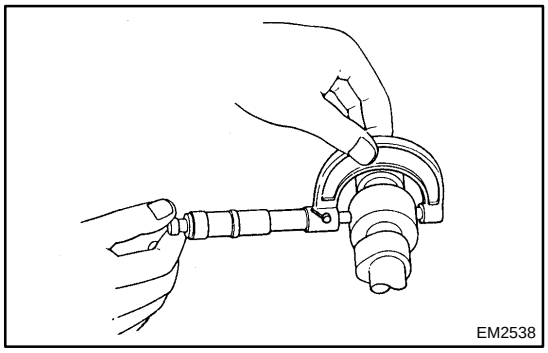

(c) Inspect camshaft journals.
  (1) Using a micrometer, measure the journal diameter.

No. 1 journal diameter:
34.449 – 34.465 mm (1.3563 – 1.3569 in.)
Others journal diameter:
22.949 – 22.965 mm (0.9035 – 0.9041 in.)

If the journal diameter is not as specified, check the oil clearance.

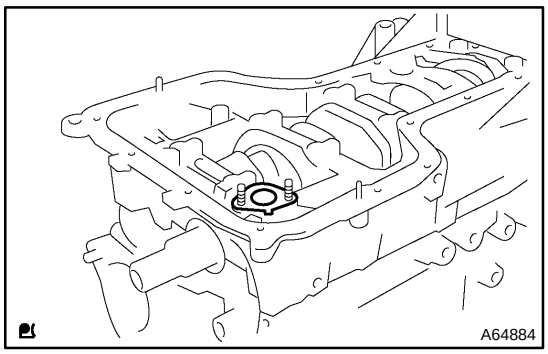

43. INSTALL OIL STRAINER FLANGE GASKET

(a) Install a new gasket to the bearing cap.

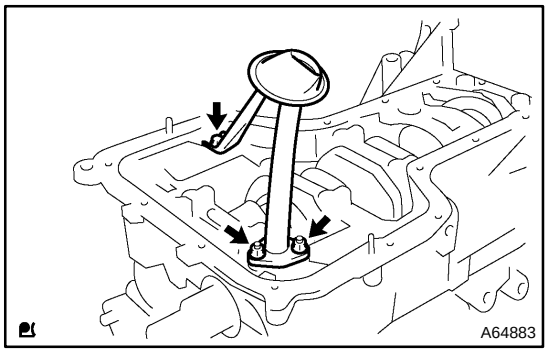

44. INSTALL OIL STRAINER SUB–ASSY

(a) Install the oil strainer with the 2 nuts and bolt.
Torque: 9.0 N·m (92 kgf·cm, 80 in.·lbf)

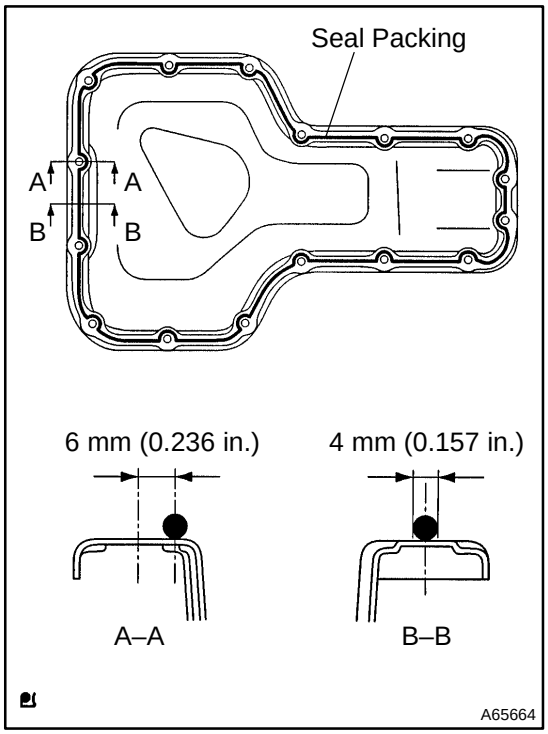

45. INSTALL OIL PAN SUB–ASSY

(a) Remove any old packing material from the contact surface and thread holes.

(b) Apply seal packing in the shape of bead (Diameter 3.5 mm – 4.5 mm (0.138 – 0.177 in.)) consequently as shown in the illustration.
Seal packing: Part No. 08826–00080 or equivalent

NOTICE:

- **Remove any oil from the contact surface.**
- **Install the oil pan within 3 minutes after applying seal packing.**
- **Do not put into engine oil within 2 hours after installing.**

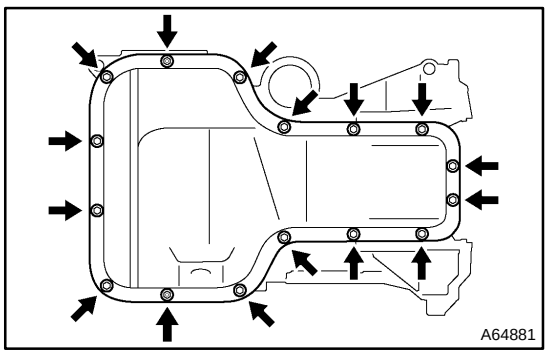

(c) Install the oil pan with the 14 bolts and 2 nuts.
Torque: 9.0 N·m (92 kgf·cm, 80 in.·lbf)

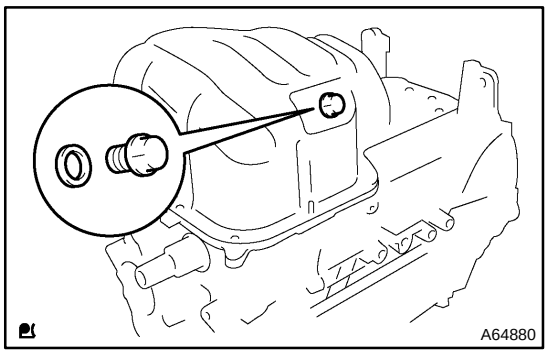

46. INSTALL OIL PAN DRAIN PLUG

(a) Place a new gasket on the oil pan drain plug, and install it.

Torque: 37 N·m (377 kgf·cm, 27 ft·lbf)

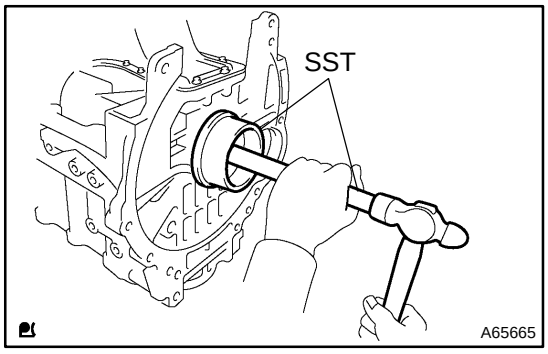

47. INSTALL ENGINE REAR OIL SEAL

(a) Apply a light coat of MP grease to a new oil seal lip.

NOTICE:

Keep the lip off foreign materials.

(b) Using SST, tap in the oil seal until its surface is flush with the oil seal retainer edge.

SST 09223–15020, 09950–70010 (09951–07100)

NOTICE:

Wipe off extra grease on the crank shaft.

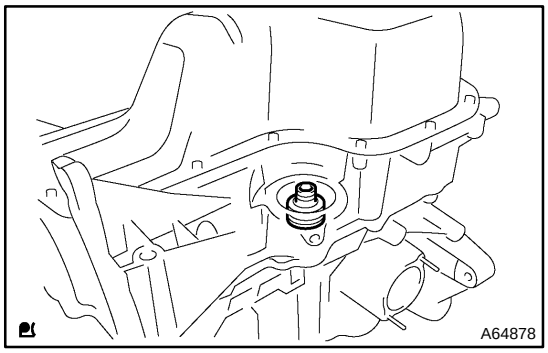

48. INSTALL OIL FILTER UNION

(a) Using a socket hexagon wrench 12, install the oil filter union.

Torque: 30 N·m (306 kgf·cm, 22 ft·lbf)

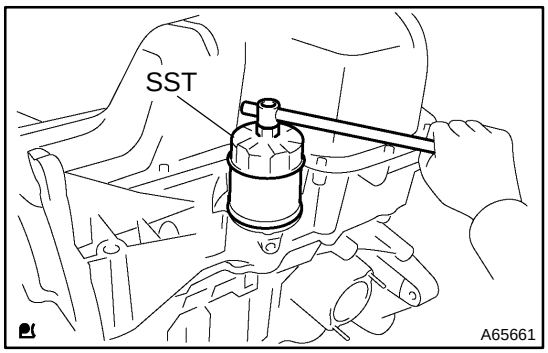

49. INSTALL OIL FILTER SUB–ASSY

(a) Check and clean the oil filter installation surface.

(b) Apply clean engine oil to the gasket of a new oil filter.

(c) Lightly screw the oil filter into place, and tighten it until the gasket contacts the seat.

(d) Using SST, tighten it an additional 3/4 turn.

SST 09228–06501

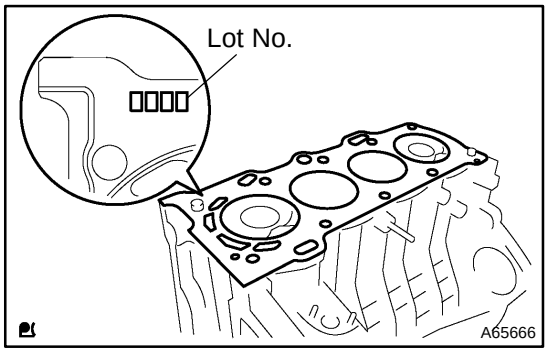

50. INSTALL CYLINDER HEAD GASKET

(a) Place a new cylinder head gasket on the cylinder block surface with the Lot No. stamp upward.

NOTICE:

- **Pay attention to the installation direction.**
- **Place the cylinder head quietly in order not to damage the gasket with the bottom part of the head.**

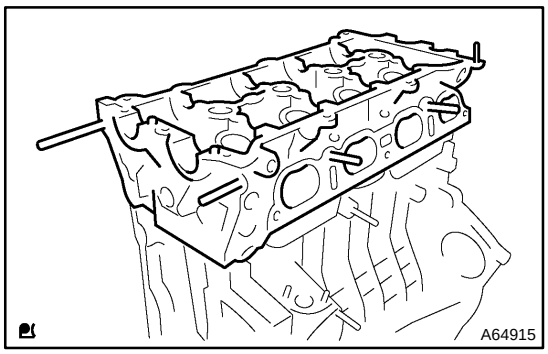

51. INSTALL CYLINDER HEAD SUB–ASSY

(a) Place the cylinder head on the cylinder block.

(b) Apply a light coat of engine oil on the threads and under the heads of the cylinder head bolts.

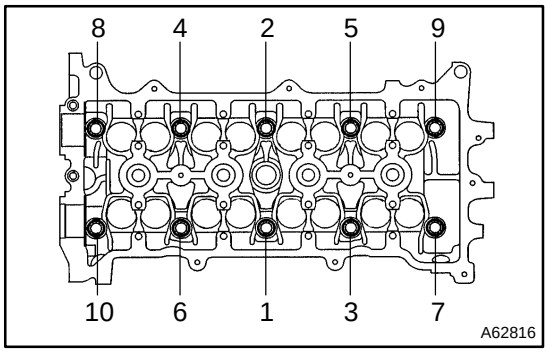

(c) Using a bi–hexagon wrench 10, install and uniformly tighten the 10 cylinder head bolts with plate washers, in several passes, in the sequence shown.
Torque: 49 N·m (500 kgf·cm, 36 ft·lbf)

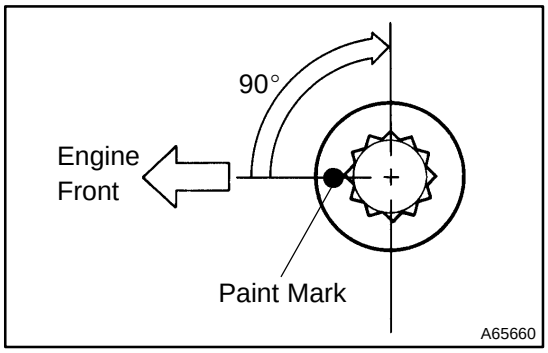

(d) Mark the front of the cylinder head bolt with paint.

(e) Retighten the cylinder head bolts 90° in the numerical order shown.

(f) Check that the point marked bolts are moved at 90° angle.

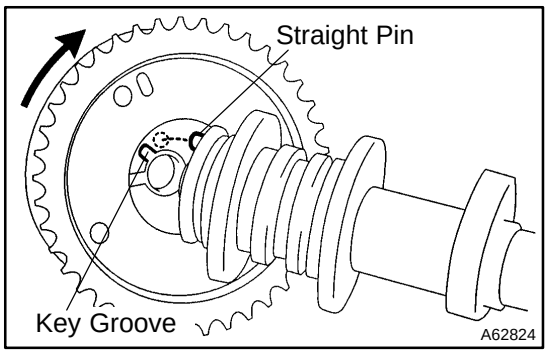

52. INSTALL CAMSHAFT TIMING GEAR ASSY

(a) Put the camshaft timing gear assembly and the camshaft together with the straight pin off the key groove.

(b) Turn the camshaft timing gear assembly to the left direction (as shown in the illustration) with pushing it lightly against the camshaft. Push further at the position where the pin gets into the groove.

CAUTION:

Be sure not to turn the camshaft timing gear to the retard angle side (to the right angle).

(c) Check that there is no clearance between the gear's fringe and the camshaft.

(d) Tighten the fringe bolt with the camshaft timing gear fixed.
Torque: 54 N·m (551 kgf·cm 40 ft·lbf)

(e) Check that the camshaft timing gear assembly can move to the retard angle side (the right angle), and is locked at the most retarded position.

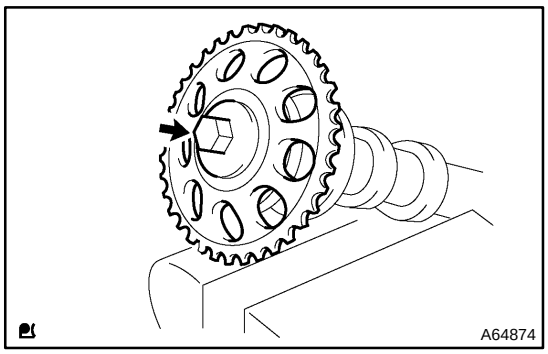

53. INSTALL CAMSHAFT TIMING GEAR OR SPROCKET

(a) Grip the camshaft with a vice, and install the camshaft timing gear with bolt.

Torque: 54 N·m (551 kgf·cm 40 ft·lbf)

NOTICE:

Be careful not to damage the camshaft.

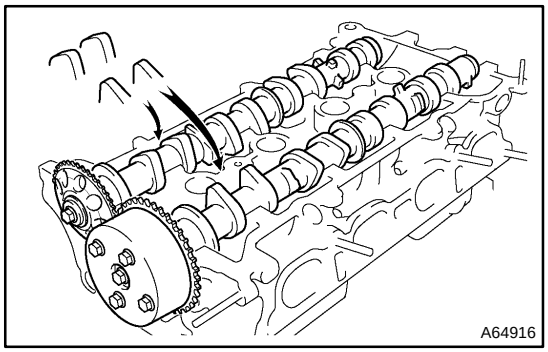

54. INSTALL CAMSHAFT

(a) Apply a light coat of engine oil on the camshaft journals.

(b) Place the 2 camshafts on the cylinder head with the No. 1 cam lobes facing as shown the illustration.

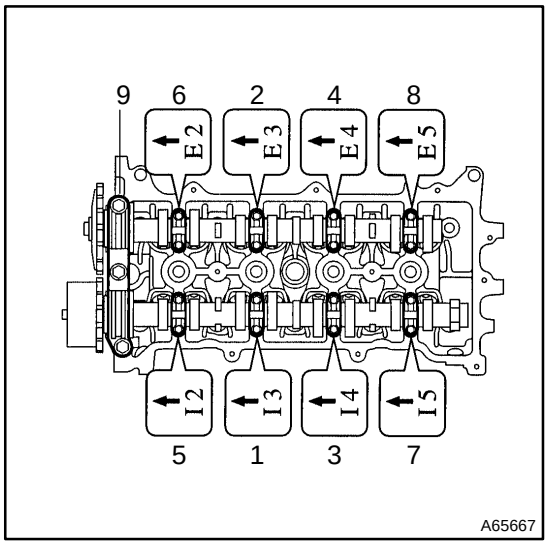

(c) Examine the front marks and numbers and tighten the bolts in the order shown in the illustration.

Torque:

Bearing cap No. 1 23 N·m (235 kgf·cm, 17 ft·lbf)

Bearing cap No. 3 13 N·m (133 kgf·cm, 10 ft·lbf)

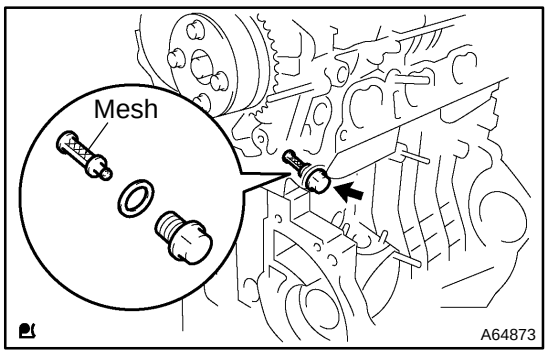

55. INSTALL OIL CONTROL VALVE FILTER

(a) Check that no foreign substance on the mesh part of the oil control valve filter.

(b) Install a new gasket and the oil control valve filter on the bolt, and install it.

Torque: 30 N·m (306 kgf·cm, 22 ft·lbf)

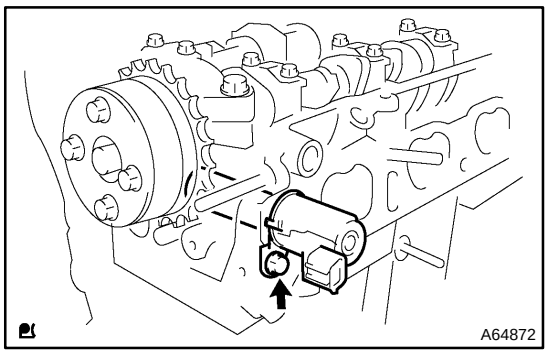

56. INSTALL CAMSHAFT TIMING OIL CONTROL VALVE ASSY

(a) Apply a light coat of a new O–ring, and install it to the camshaft timing oil control valve.

(b) Install the camshaft timing oil control valve with the bolt.
Torque: 9.0 N·m (92 kgf·cm, 80 in.·lbf)

NOTICE:
Be careful not twist an O–ring.

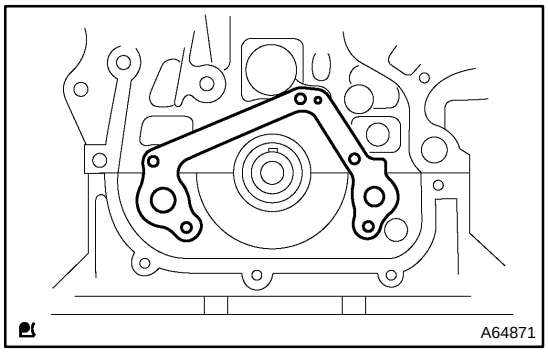

57. INSTALL OIL PUMP GASKET

(a) Install a new gasket to the cylinder block.

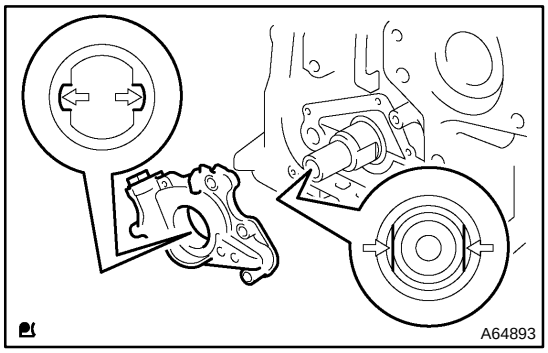

58. INSTALL OIL PUMP ASSY

(a) Engage the spline teeth of the oil pump drive rotor with the large teeth of the crankshaft, and side the oil pump.

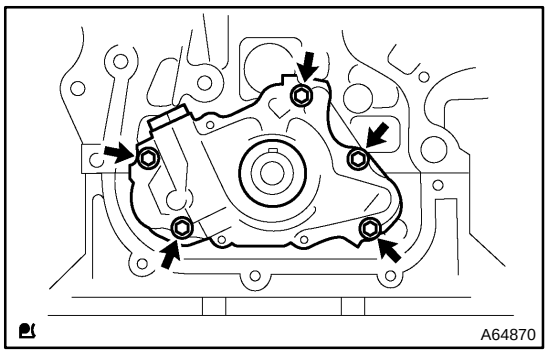

(b) Install the oil pump with the 5 bolts.
Torque: 9.0 N·m (92 kgf·cm, 80 in.·lbf)

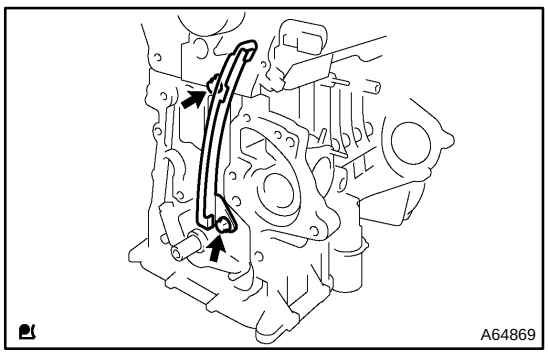

59. INSTALL CHAIN VIBRATION DAMPER NO.1

(a) Install the chain vibration damper with the 2 bolts.
Torque: 9.0 N·m (92 kgf·cm, 80 in.·lbf)

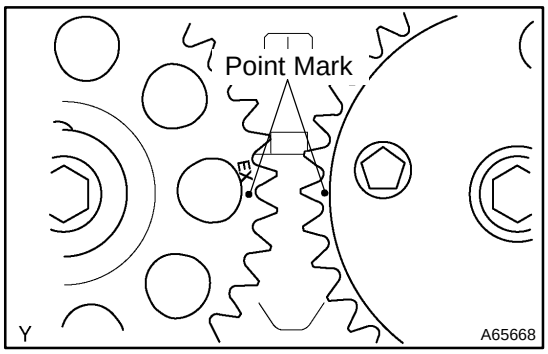

60. INSTALL CHAIN SUB–ASSY

(a) Set No. 1 cylinder to TDC/compression.

(1) Turn the hexagonal wrench head portion of the camshafts, and align the point marks of the camshaft timing gears.

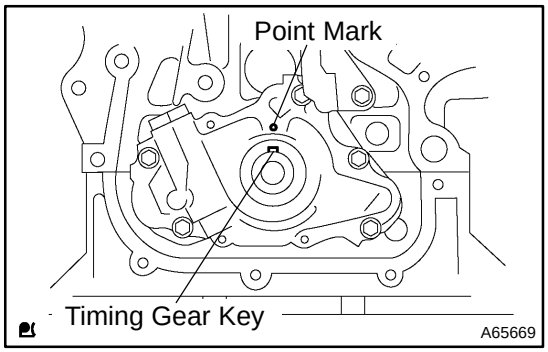

(2) Using a crankshaft pulley bolt, turn the crankshaft, and the timing gear key aligned with the point mark on the oil pump.

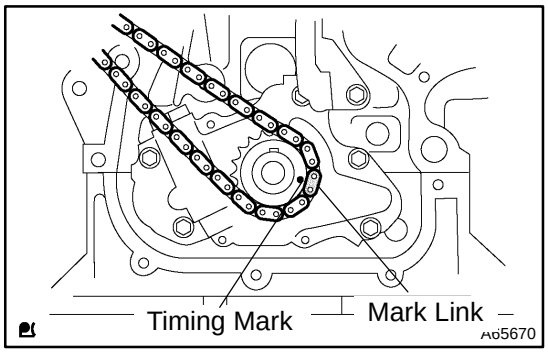

(b) Install the chain on the crankshaft timing gear with the yellow color mark link aligned with the timing mark on the crankshaft timing gear.

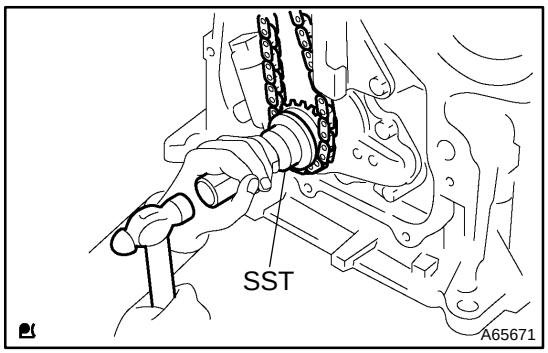

(c) Using SST, install the crankshaft timing gear.
SST 09223–22010

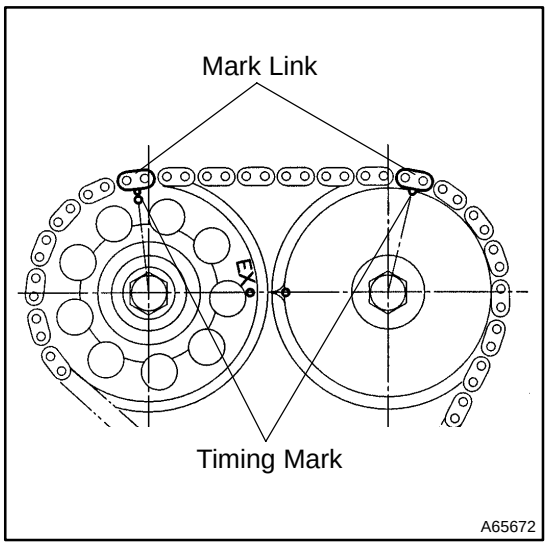

(d) Install the chain on the camshaft timing gears with the yellow color mark links aligned with the timing marks on the camshaft timing gears.

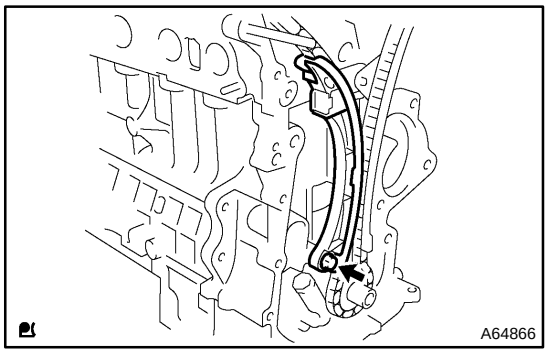

61. INSTALL CHAIN TENSIONER SLIPPER

(a) Install the chain tensioner slipper with the bolt.
Torque: 19 N·m (189 kgf·cm, 14 ft·lbf)

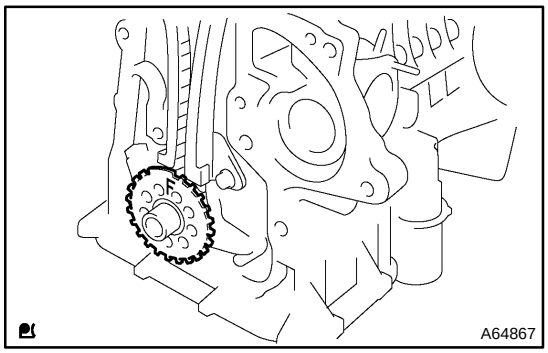

62. INSTALL CRANKSHAFT POSITION SENSOR PLATE NO.1

(a) Install the crankshaft position sensor plate with the ”F” mark facing forward.

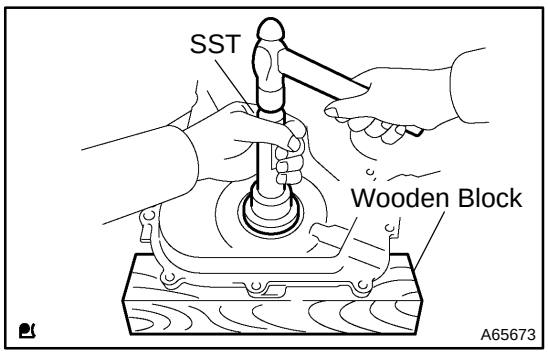

63. INSTALL TIMING GEAR COVER OIL SEAL

(a) Apply a light coat of MP grease to a new oil seal lip.
(b) Place the timing chain cover on wooden blocks.
(c) Using SST, tap in the oil seal until its surface is flush with the timing chain cover edge.
SST 09223–22010

NOTICE:
Keep the lip off foreign materials.

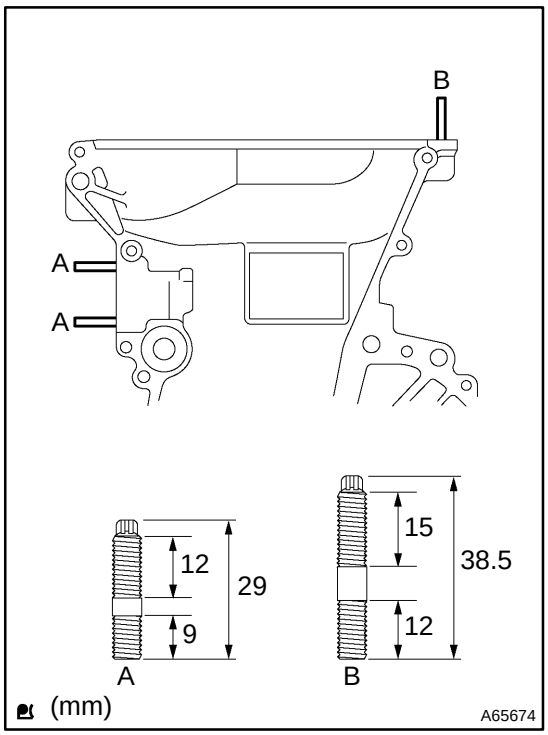

64. INSTALL TIMING CHAIN OR BELT COVER SUB–ASSY

(a) Remove any old packing material from the contact surface.

(b) Using a torx socket wrench E5, install the 3 stud bolts.
Torque: 5.0 N·m (51 kgf·cm, 44 in.·lbf)

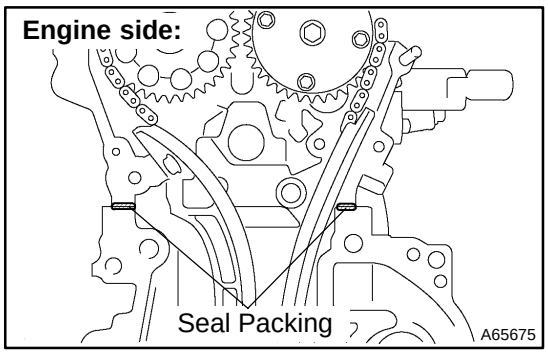

(c) Apply seal packing in the shape of bead (Diameter 3.5 mm – 4.5 mm (0.138 – 0.177 in.)) consequently as shown in the illustration.

Seal packing:

Water pump part Part No. 08826–00100 or equivalent

Other part Part No. 08826–00080 or equivalent

NOTICE:

- **Remove any oil from the contact surface.**
- **Install the oil pan within 3 minutes after applying seal packing.**
- **Do not put into engine oil within 2 hours after installing.**

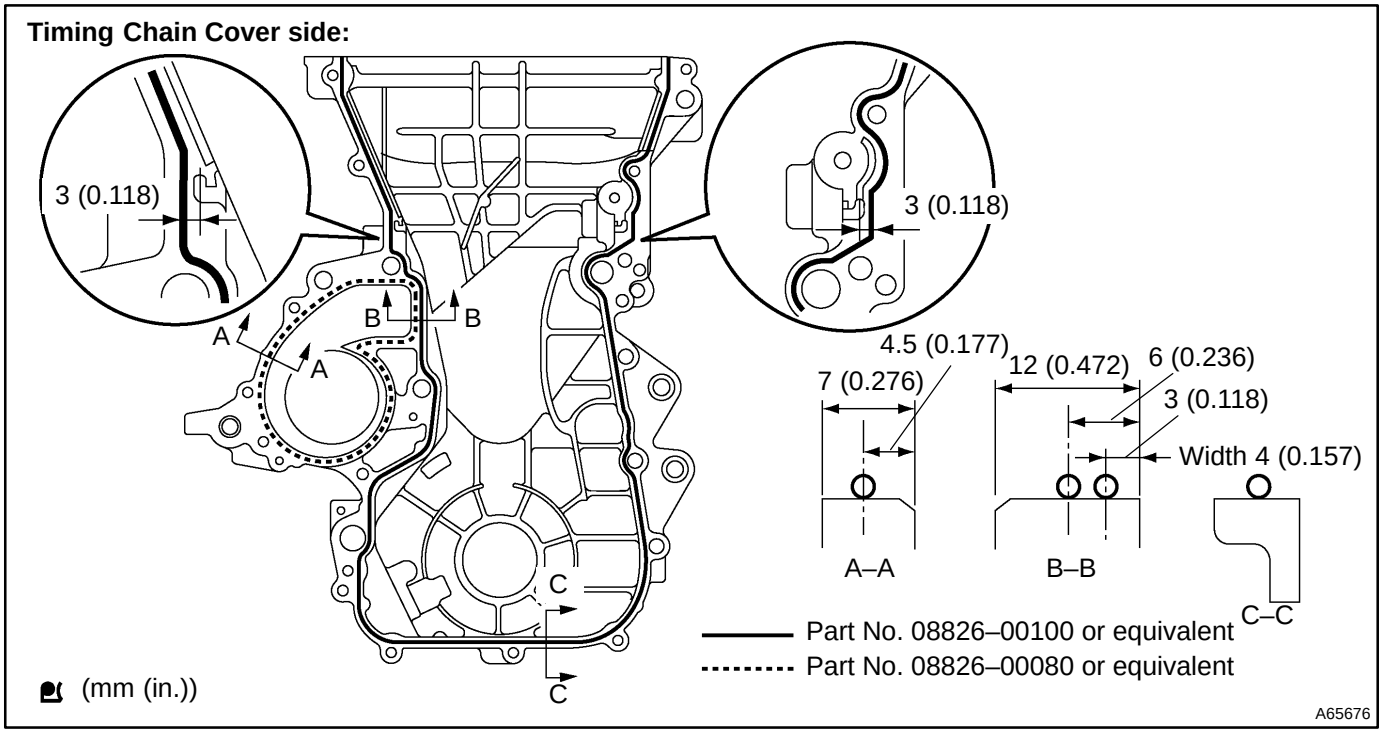

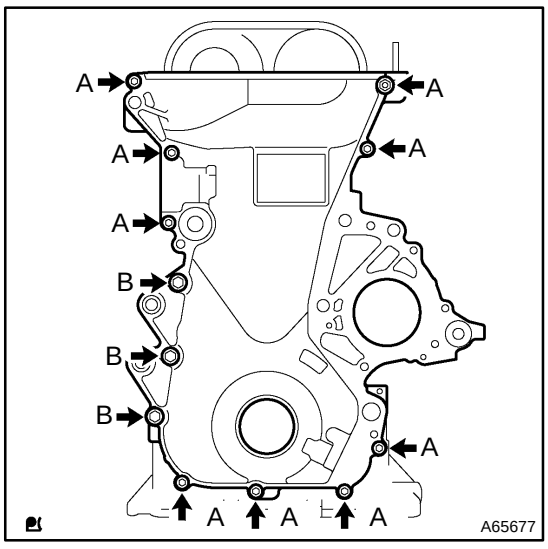

(d) Install the timing chain cover with the 12 bolts and nut.

Torque:

A 13 N·m (133 kgf·cm, 10 ft·lbf)

B 19 N·m (189 kgf·cm, 14 ft·lbf)

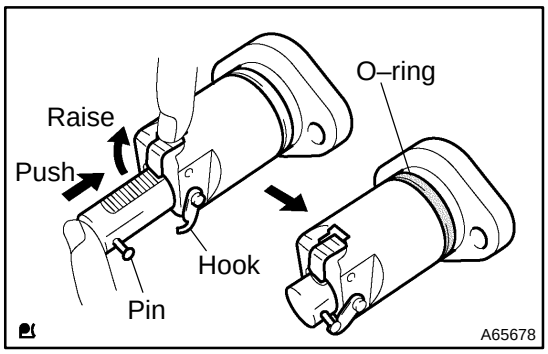

65. INSTALL CHAIN TENSIONER ASSY NO.1

(a) Check an O–ring is clean, and set the hook as shown in the illustration.

(b) Apply a light coat of engine oil to an O–ring.

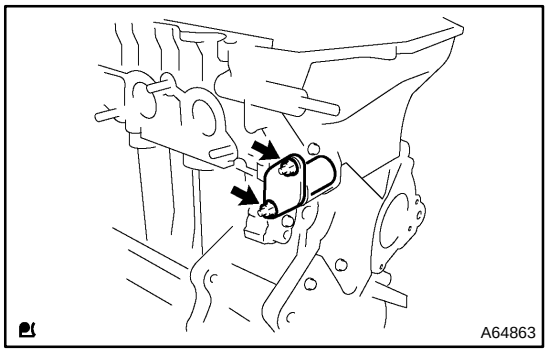

(c) Install the chain tensioner with the 2 nuts.
Torque: 9.0 N·m (92 kgf·cm, 80 in.·lbf)

NOTICE:

- **Be careful not twist an O–ring.**
- **When installing the chain tensioner, set the hook again if the hook releases the plunger.**

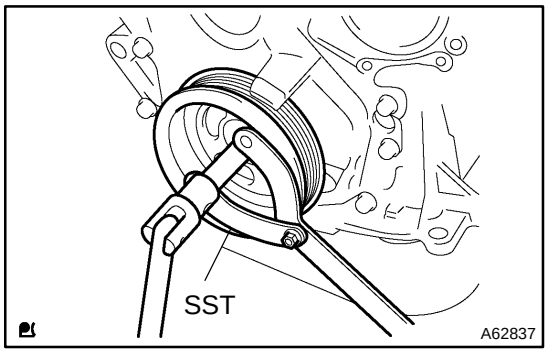

66. INSTALL CRANKSHAFT PULLEY

(a) Align the pulley set key with the key groove of the crankshaft pulley, and slide on the crankshaft pulley.

(b) Using SST, install the crankshaft pulley bolt.
SST 09960–10010 (09962–01000, 09963–01000)
Torque: 138 N·m (1,407 kgf·cm, 102 ft·lbf)

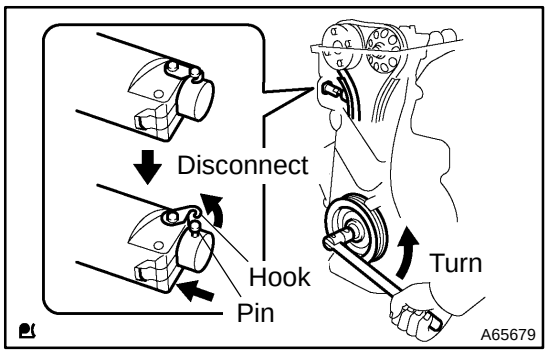

(c) Turn the crankshaft counterclockwise, and disconnect the plunger knock pin from the hook.

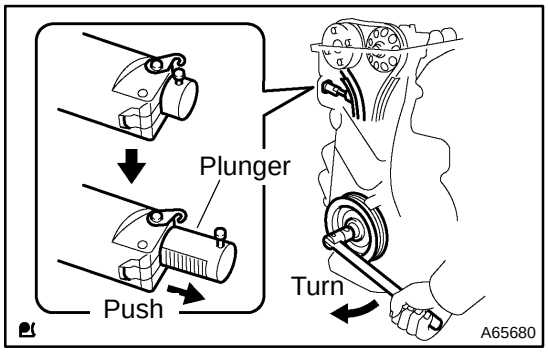

(d) Turn the crankshaft clockwise, and check that the slipper is pushed by the plunger.

HINT:

If the plunger does not spring out, press the slipper into the chain tensioner with a screwdriver so that the hook is released from the knock pin and the plunger springs out.

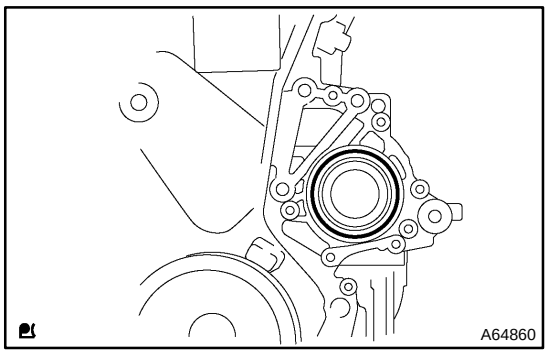

67. INSTALL WATER PUMP O–RING

(a) Install a new O–ring to the timing chain cover.

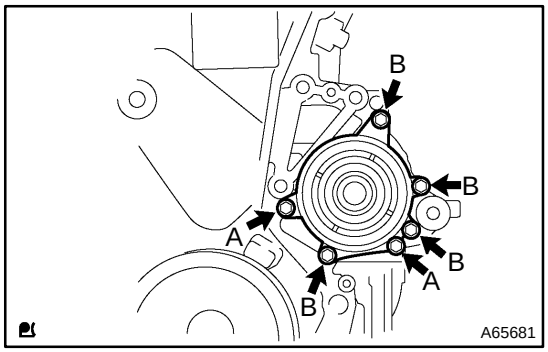

68. INSTALL WATER PUMP ASSY

(a) Install the water pump with the 6 bolts.

Torque:
Bolt A 9.0 N·m (92 kgf·cm, 80 in·lbf)
Bolt B 11 N·m (112 kgf·cm, 8 ft·lbf)

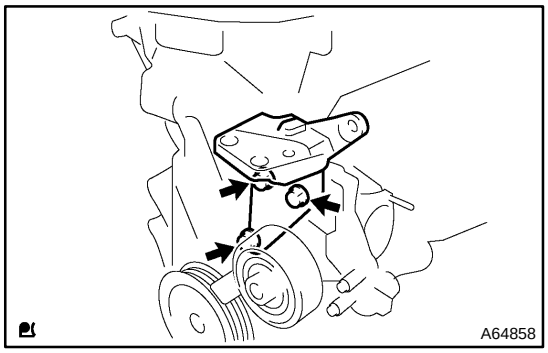

69. INSTALL TRANSVERSE ENGINE ENGINE MOUNTING BRACKET

(a) Install the transverse engine engine mounting bracket with the 3 bolts.

Torque: 47 N·m (479 kgf·cm, 35 ft·lbf)

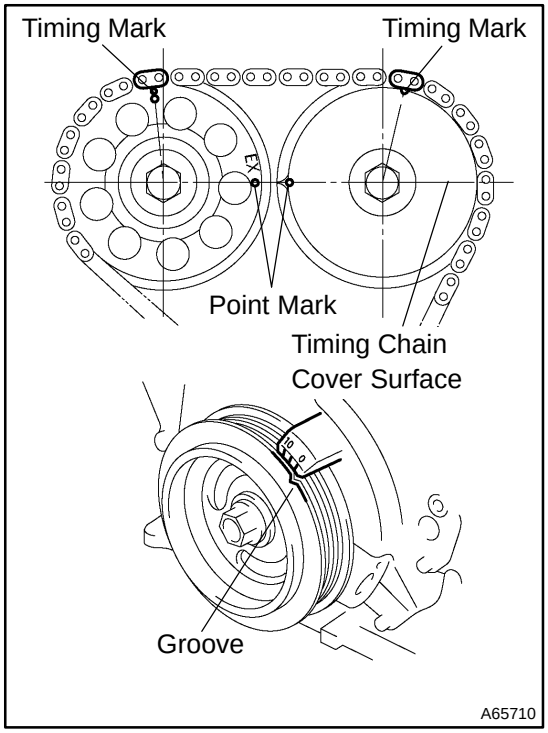

70. INSPECT VALVE CLEARANCE

(a) Set No. 1 cylinder to TDC/compression.
  (1) Turn the crankshaft pulley, and align its groove with timing mark ”0” of the timing chain cover.
  (2) Check that the point marks of the camshaft timing gears are in straight line on the timing chain cover surface as shown in the illustration.

HINT:
If not, turn the crankshaft 1 revolution (360°) and align the marks as above.

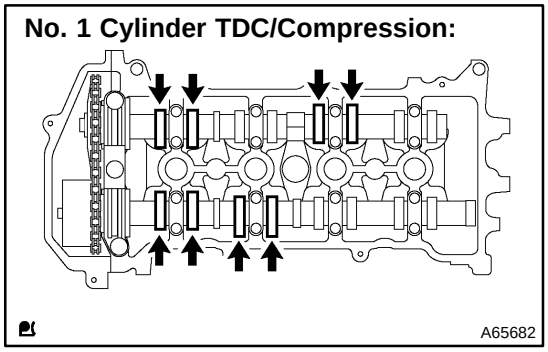

(b) Check only the valves indicated.
(1) Using a feeler gauge, measure the clearance between the valve lifter and camshaft.
(2) Record the out–of specification valve clearance measurements. They will be used later to determine the required replacement valve lifters.

Valve clearance (Cold):
Intake 0.15 – 0.25 mm (0.0059 – 0.0098 in.)
Exhaust 0.25 – 0.35 mm (0.0098 – 0.0138 in.)

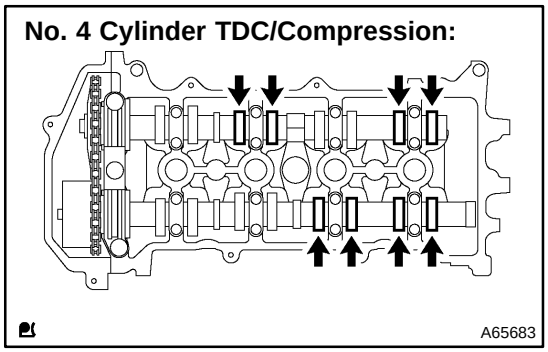

(c) Turn the crankshaft 1 revolution (360°) and set No. 4 cylinder to TDC/compression.
(d) Check only the valves indicated.
(1) Using a feeler gauge, measure the clearance between the valve lifter and camshaft.
(2) Record the out–of specification valve clearance measurements. They will be used later to determine the required replacement valve lifters.

Valve clearance (Cold):
Intake 0.15 – 0.25 mm (0.0059 – 0.0098 in.)
Exhaust 0.25 – 0.35 mm (0.0098 – 0.0138 in.)

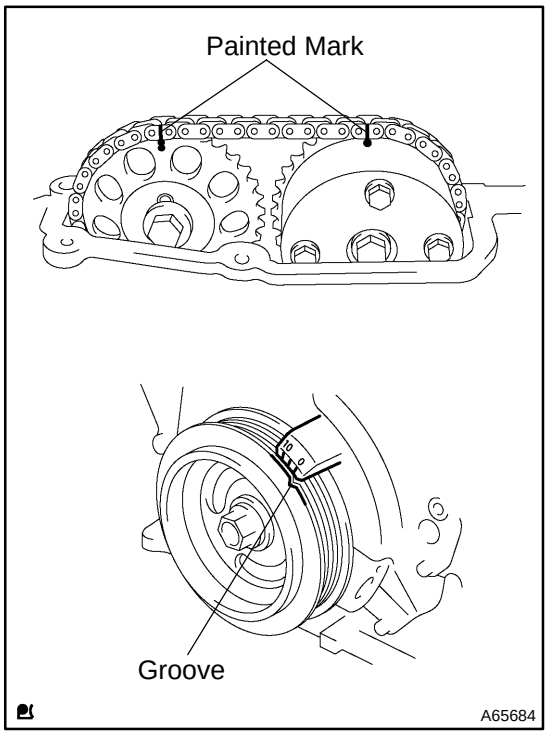

71. ADJUST VALVE CLEARANCE

NOTICE:

Be sure not to revolve the crankshaft without the chain tensioner.

(a) Set the No. 1 cylinder to the TDC/compression.
(b) Place painted marks on the chain and camshaft timing gears.

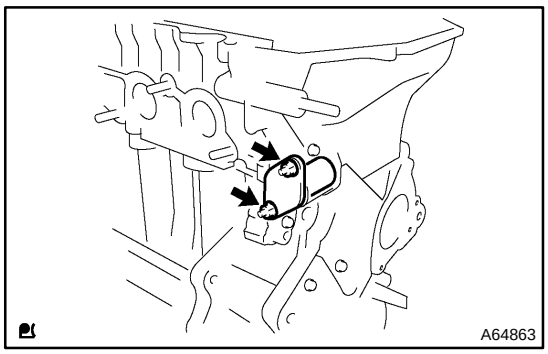

(c) Remove the 2 nuts and chain tensioner.

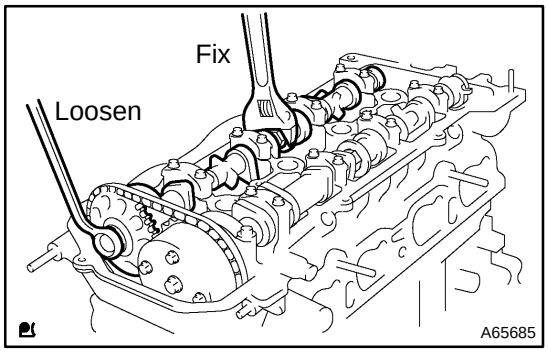

(d) Fix the camshaft with a spanner and so on, then loosen the camshaft timing gear set bolt.

NOTICE:
Be careful not to damage the valve lifter.

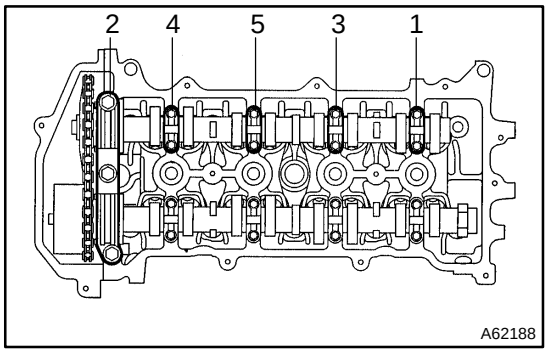

(e) Loosen the bearing cap bolts on No. 2 camshaft in the order as shown in the illustration in several passes, and remove the bearing caps.

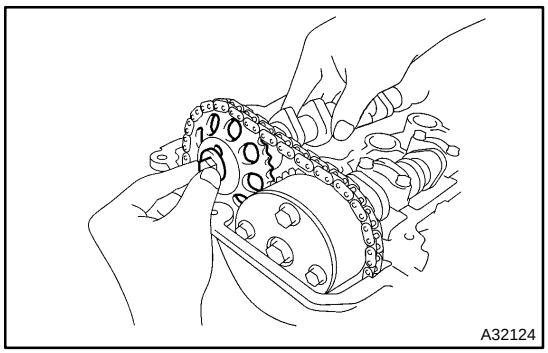

(f) Remove the camshaft timing gear as shown in the illustration.

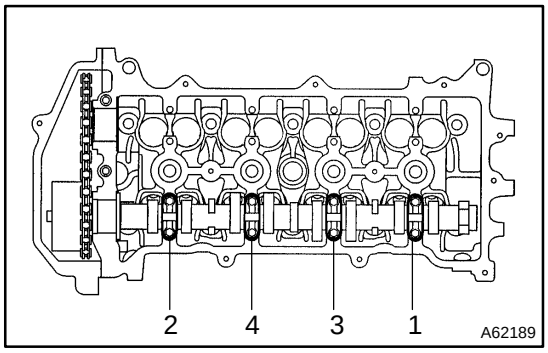

(g) Loosen the bearing cap bolts on camshaft in the order as shown in the illustration in several passes, and remove the bearing caps.

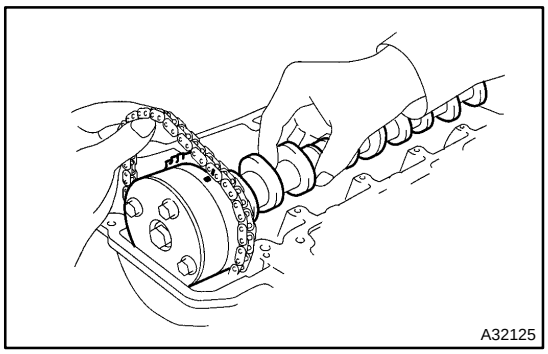

(h) Remove the camshaft with holding the chain.

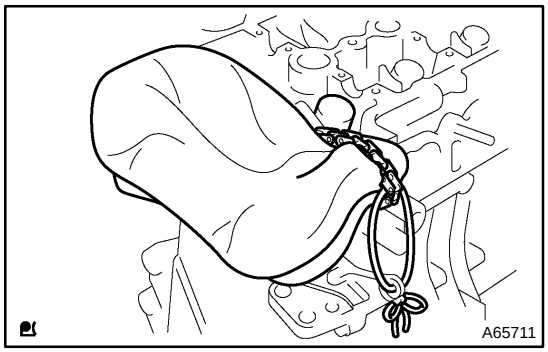

(i) Tie the chain with a string as shown in the illustration.

NOTICE:

Be careful not to drop anything inside the timing chain cover.

(j) Remove the valve lifters.

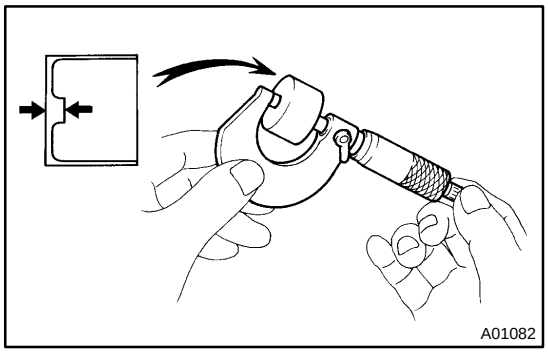

(k) Using a micrometer, measure the thickness of the removed valve lifters.

(l) Calculate the thickness of a new lifter so that the valve clearance comes within the specified value.

Specified valve:

Intake A = B + (C – 0.20 mm (0.0079 in.))

Exhaust A = B + (C – 0.30 mm (0.0118 in.))

A	Thickness of new lifter
B	Thickness of used lifter
C	Measured valve clearance

HINT:

- Select a new lifter with a thickness as close as possible to the calculated values.
- Lifter are available in 35 sizes in increments of 0.020 mm (0.0008 in.), from 5.060 mm (0.1992 in.) to 5.740 mm (0.2260 in.).

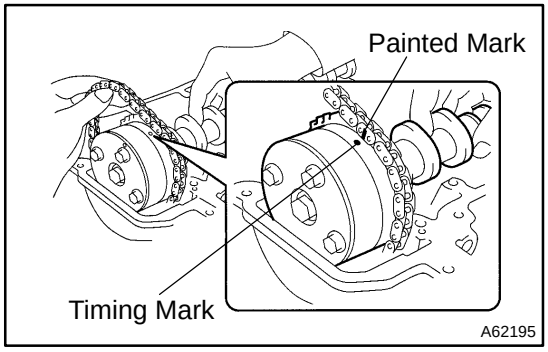

(m) As shown in the illustration, install the chain on the camshaft timing gear, with the painted mark aligned with the timing mark on the camshaft timing gear.

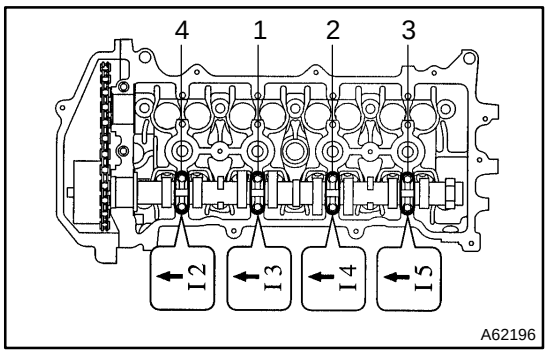

(n) Examine the front marks and numbers and tighten the bolts in the order shown in the illustration.
Torque: 13 N·m (133 kgf·cm, 10 ft·lbf)

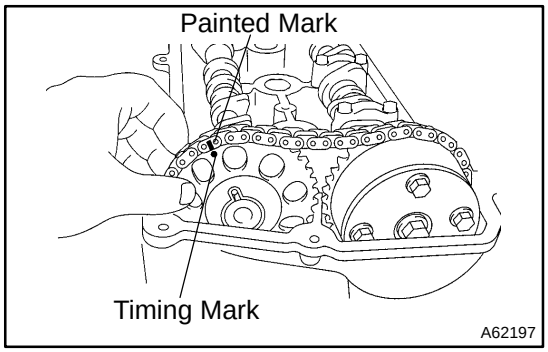

(o) Put the camshaft No.2 on the cylinder head with the painted mark of the chain aligned with the timing mark on the camshaft timing gear.

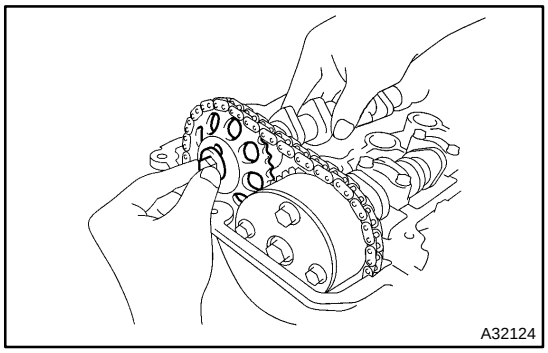

(p) Raising the camshaft, tighten the set bolt temporarily.

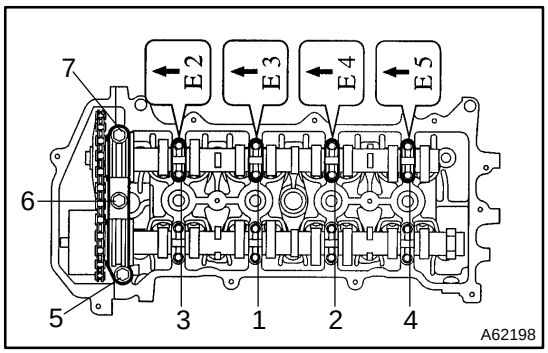

(q) Examine the front marks and numbers and tighten the bolts in the order shown in the illustration.
Torque:
Bearing cap No. 3 13 N·m (133 kgf·cm, 10 ft·lbf)
Bearing cap No. 1 23 N·m (235 kgf·cm, 17 ft·lbf)

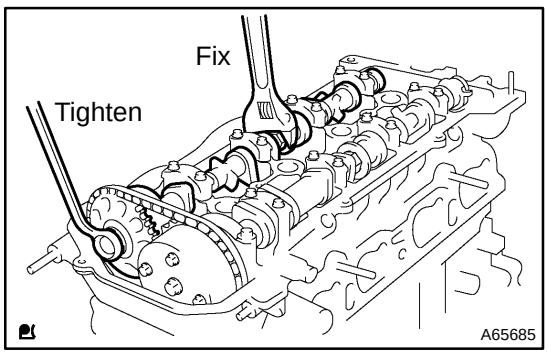

(r) Fix the camshaft with a spanner and so on, then tighten the camshaft timing gear set bolt.
Torque: 54 N·m (551 kgf·cm, 40 ft·lbf)

NOTICE:
Be careful not to damage the valve lifter.

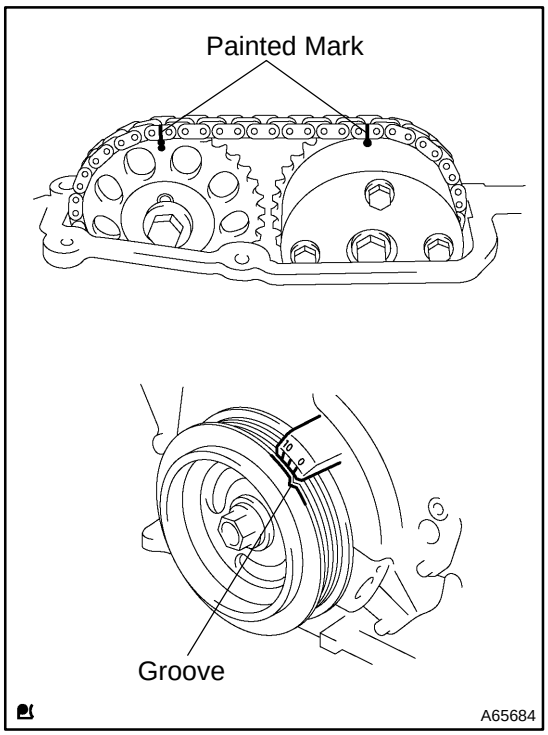

(s) Check the painted marks on the chain and camshaft timing gears, and then the alignment of the crankshaft pulley groove with timing mark of the timing chain cover as shown in the illustration.

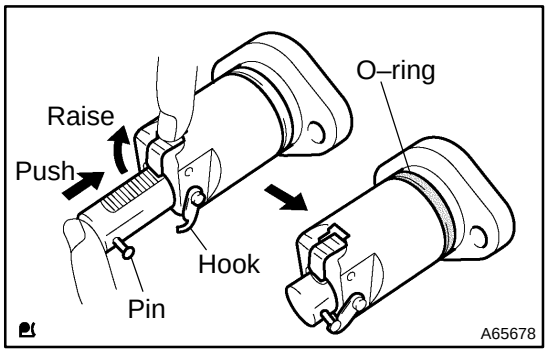

(t) Install chain tensioner.
(1) Check an O–ring is clean, and set the hook as shown in the illustration.
(2) Apply a light coat of engine oil to an O–ring.

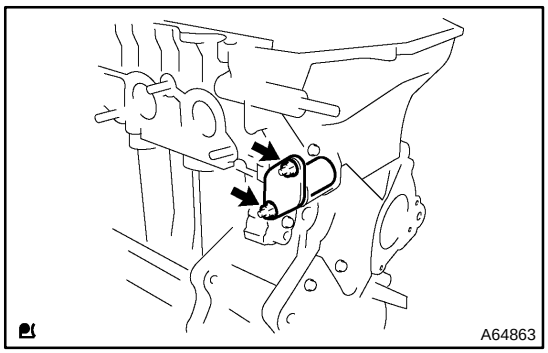

(3) Install the chain tensioner with the 2 nuts.
Torque: 9.0 N·m (92 kgf·cm, 80 in·lbf)

NOTICE:
- **Be careful not twist an O–ring.**
- **When installing the tensioner, set the hook again if the hook release the plunger.**

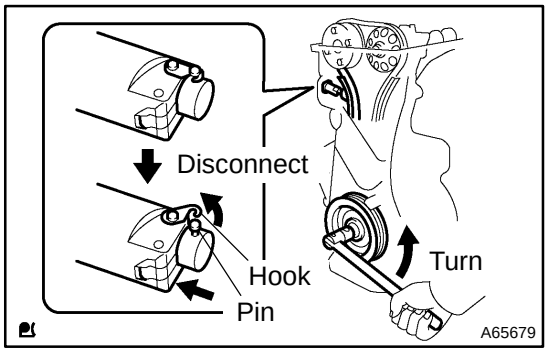

(4) Turn the crankshaft counterclockwise, and disconnect the plunger knock pin from the hook.

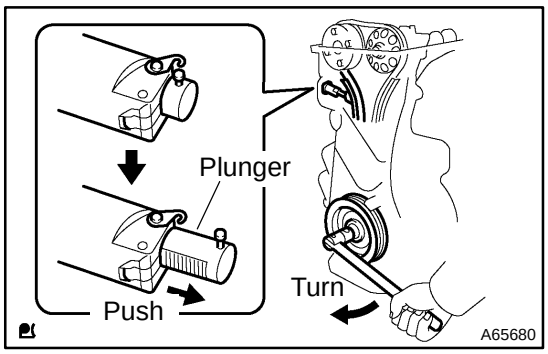

(5) Turn the crankshaft clockwise, and check that the slipper is pushed by the plunger.

HINT:

If the plunger does not spring out, press the slipper into the chain tensioner with a screwdriver so that the hook is released from the knock pin and the plunger springs out.

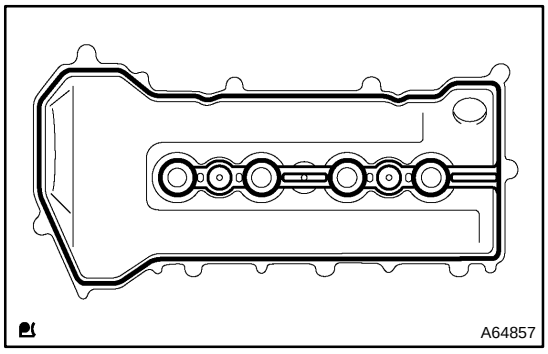

72. INSTALL CYLINDER HEAD COVER GASKET

(a) Install the gasket to the cylinder head cover.

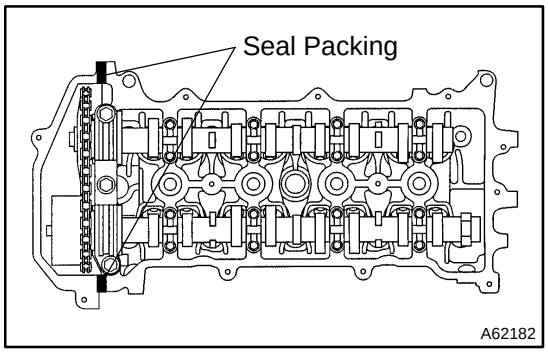

73. INSTALL CYLINDER HEAD COVER SUB–ASSY

(a) Remove any old packing (FIPG) material.

(b) Apply seal packing to 2 locations as shown in the illustration.

Seal packing: Part No. 08826–00080 or equivalent

NOTICE:

- **Remove any oil from the contact surface.**
- **Install the cylinder head cover within 3 minutes after applying seal packing.**
- **Do not put into engine oil 2 hours after installing.**

(c) Install the cylinder head cover with the 9 bolts, 2 seal washers and 2 nuts.

Torque:

A 11 N·m (112 kgf·cm, 8 ft·lbf)

B 9.0 N·m (92 kgf·cm, 80 in·lbf)

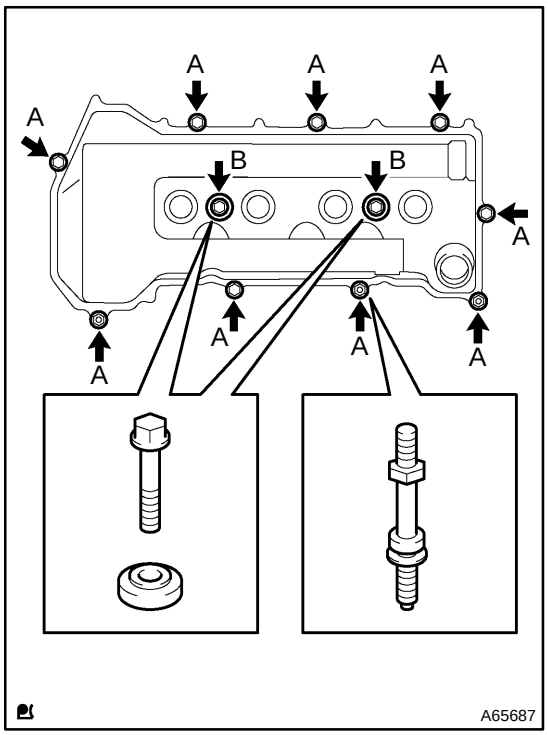

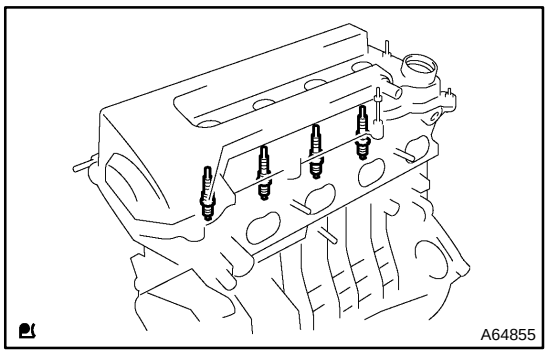

74. INSTALL SPARK PLUG

(a) Using a spark plug wrench, install the spark plugs.
Torque: 25 N·m (255 kgf·cm, 18 ft·lbf)

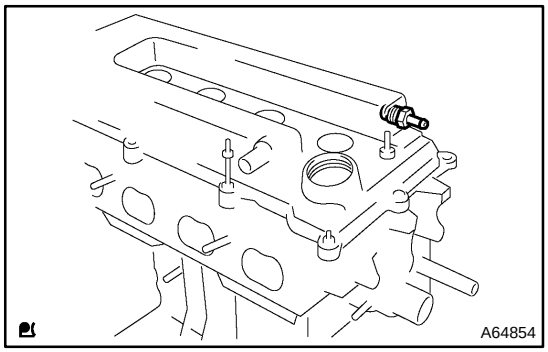

75. INSTALL VENTILATION VALVE SUB–ASSY

(a) Install the ventilation valve to the cylinder head cover.
Torque: 30 N·m (306 kgf·cm, 22 ft·lbf)

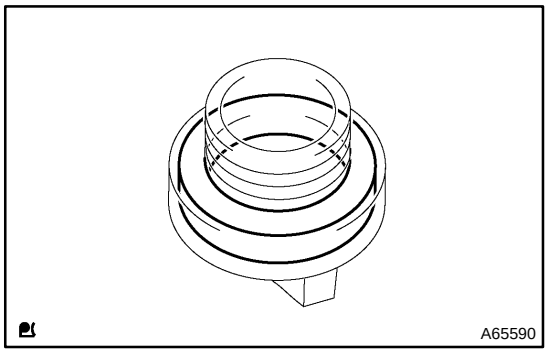

76. INSTALL OIL FILLER CAP GASKET

(a) Install the gasket to the oil filler cap.

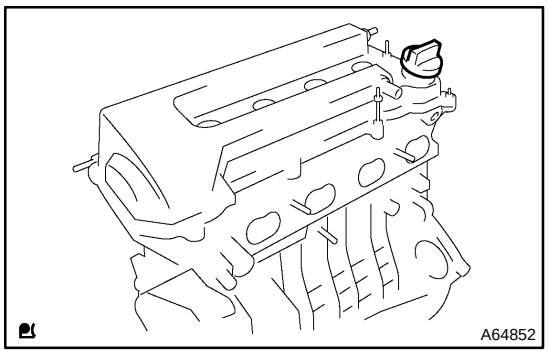

77. INSTALL OIL FILLER CAP SUB–ASSY

(a) Install the oil filler cap to the cylinder head cover.

140R2–01

REPLACEMENT

1. WORK FOR PREVENTING GASOLINE FROM SPILLING OUT (See page 11–1)
2. REMOVE FRONT WHEELS
3. REMOVE ENGINE UNDER COVER RH
4. REMOVE ENGINE UNDER COVER LH
5. DRAIN COOLANT (See page 16–6)
6. DRAIN AUTOMATIC TRANSAXLE FLUID (4WD DRIVE TYPE)
(a) Using a 10 mm hexagon wrench, remove the drain plug and a gasket. Drain automatic transaxle fluid.
(b) Install a new gasket and the drain plug.
Torque: 49 N·m (500 kgf·cm, 36 ft·lbf)
7. DRAIN TRANSFER OIL (4WD DRIVE TYPE)
(a) Install a new gasket and the drain plug.
Torque: 49 N·m (500 kgf·cm, 36 ft·lbf)

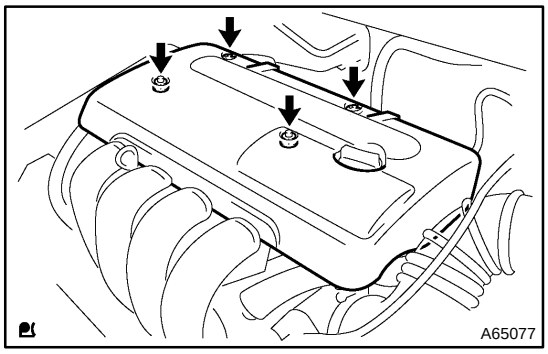

8. REMOVE CYLINDER HEAD COVER NO.2
(a) Remove the 2 nuts, 2 clips and cylinder head cover.

9. DISCONNECT RADIATOR HOSE INLET
(a) Disconnect the radiator hose inlet from the radiator.
10. SEPARATE RADIATOR HOSE OUTLET
(a) Disconnect the radiator hose outlet from the radiator.
11. DISCONNECT OIL COOLER INLET TUBE NO.1 (A/T TRANSAXLE)
(a) Disconnect the oil cooler inlet tube from the radiator.
12. DISCONNECT OIL COOLER OUTLET TUBE NO.1 (A/T TRANSAXLE)
(a) Disconnect the oil cooler outlet tube from the radiator.
13. REMOVE RADIATOR SUPPORT UPPER (W/ AIR CONDITIONER)
(a) Remove the 2 bolts and 2 radiator support upper.
14. REMOVE RADIATOR ASSY (W/ AIR CONDITIONER)
(a) Disconnect the connector and harness clamp, and remove the radiator.
15. REMOVE BATTERY

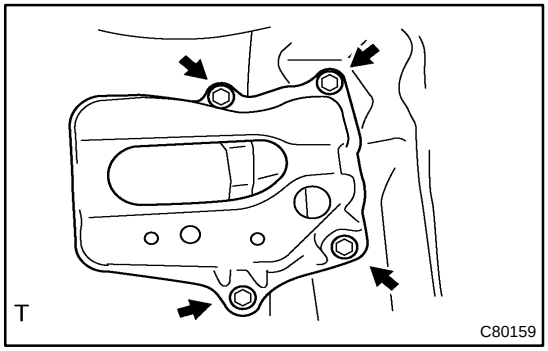

16. REMOVE BATTERY CARRIER
(a) Remove the 4 bolts and battery carrier.

17. REMOVE AIR CLEANER ASSEMBLY WITH HOSE

(a) Separate an intake air flow meter connector.

(b) Separate the VSV connector.

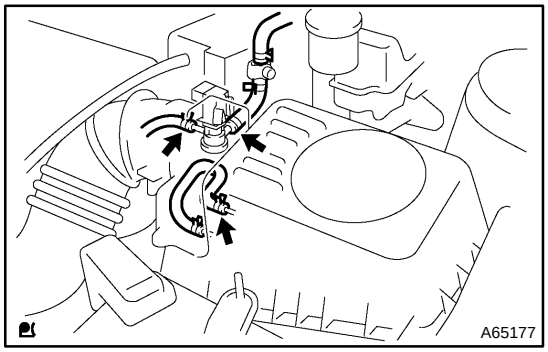

(c) Disconnect 3 vacuum hoses, as shown in the illustration.

(d) Loosen an air cleaner hose clump and separate an air cleaner hose.

(e) Remove the air cleaner cap.

(f) Remove the air filter.

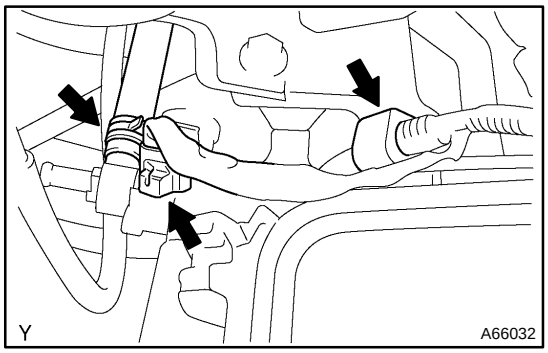

(g) Disconnect the wireharnnes clamp, connector and hose.

(h) Remove the 3 bolts and the air cleaner case.

18. REMOVE EFI FUEL PIPE CLAMP (See page 11–10)

19. DISCONNECT FUEL TUBE SUB–ASSY (See page 11–10)

20. SEPARATE ACCELERATOR CONTROL CABLE ASSY

(a) Loosen the nut, and remove the accelerator control cable.

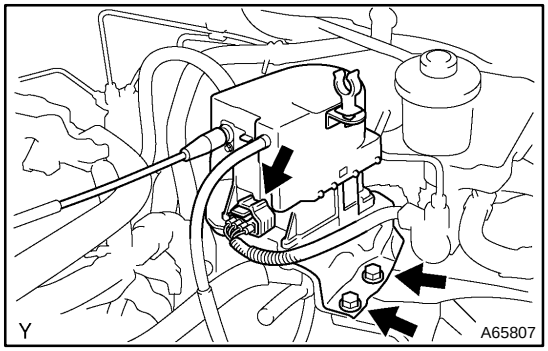

21. REMOVE CRUISE CONTROL ACTUATOR ASSY (W/ CRUISE CONTROL)

(a) Disconnect the actuator connector.

(b) Remove the 2 bolts, and disconnect the actuator from the body.

22. DISCONNECT UNION TO CONNECTOR TUBE HOSE

(a) Disconnect the union to connector tube hose from the brake booster.

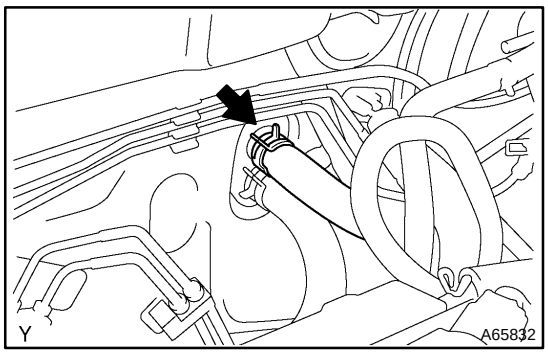

23. DISCONNECT HEATER INLET WATER HOSE

(a) Disconnect the heater inlet water hose from the air conditioner tube.

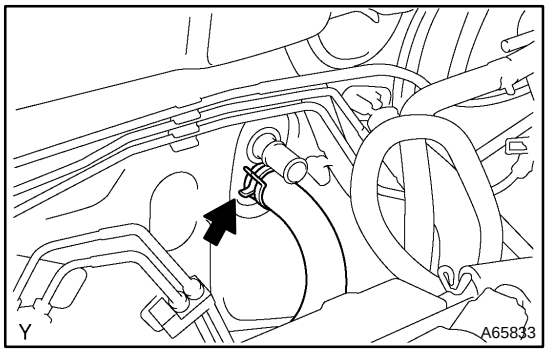

24. DISCONNECT HEATER OUTLET WATER HOSE

(a) Disconnect the heater outlet water hose from the air conditioner tube.

25. SEPARATE FLOOR SHIFT CABLE TRANSMISSION CONTROL SELECT (M/T TRANSAXLE) (See page 41–17)

26. SEPARATE FLOOR SHIFT CABLE TRANSMISSION CONTROL SHIFT (M/T TRANSAXLE) (See page 41–17)

27. SEPARATE FLOOR SHIFT CABLE TRANSMISSION CONTROL SHIFT (A/T TRANSAXLE) (See page 40–90)

28. SEPARATE CLUTCH RELEASE CYLINDER ASSY (M/T TRANSAXLE) (See page 41–17)

29. REMOVE GLOVE COMPARTMENT DOOR ASSY (See page 71–10)

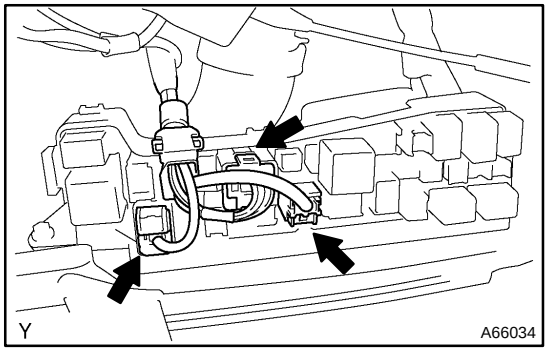

30. DISCONNECT ENGINE WIRE

(a) Remove the engine room relay block cover.

(b) Disconnect the 3 engine wire connectors from the engine room relay block.

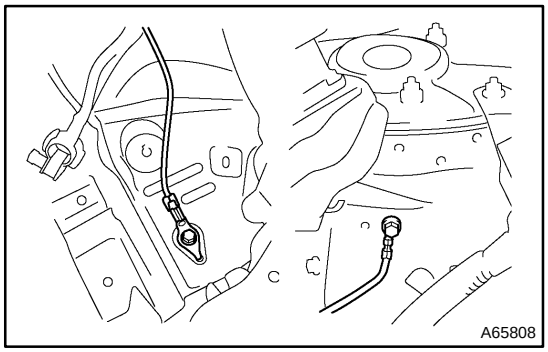

(c) Disconnect the 2 ground cables from the vehicle.

(d) Disconnect the engine wire from the engine ECM and junction block.

(e) Pull out the engine wire from the cabin.

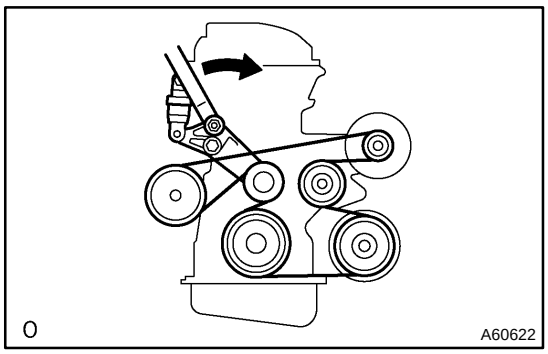

31. REMOVE FAN AND GENERATOR V BELT

(a) Turn the V–ribbed belt tensioner slowly clockwise and loosen it. Then, remove the fan and generator V belt and put back the V–ribbed belt tensioner little by little and fix it quietly.

32. SEPARATE COMPRESSOR AND MAGNETIC CLUTCH (W/ AIR CONDITIONER) (See page 55–40)

HINT:

Hung up the hoses instead of detaching.

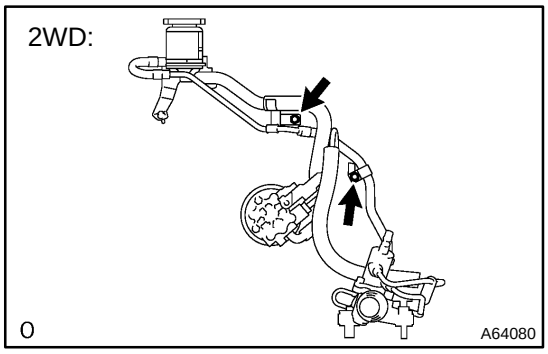

33. SEPARATE RETURN TUBE SUB–ASSY

(a) Disconnect the vane pump oil reservoir from the oil reservoir bracket.

(b) 2WD

(1) Remove the 2 bolts installing the return tube.

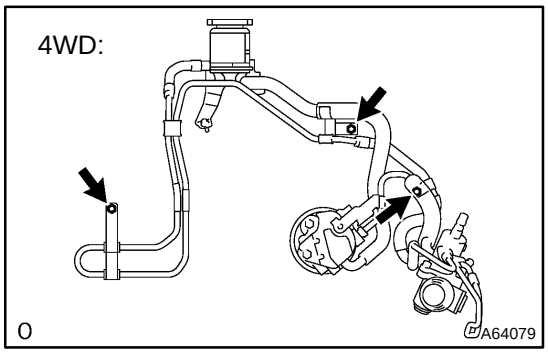

(c) 4WD

(1) Remove the 3 bolts installing the return tube.

34. REMOVE FRONT DOOR SCUFF PLATE RH (See page 76–17)

35. REMOVE COWL SIDE TRIM BOARD RH (See page 71–10)

36. REMOVE REAR DOOR SCUFF PLATE RH (4WD DRIVE TYPE) (See page 76–17)

37. REMOVE CENTER PILLAR GARNISH LOWER RH (4WD DRIVE TYPE) (See page 76–17)

38. REMOVE FRONT SEAT ASSY RH (4WD DRIVE TYPE) (See page 72–2)

39. REMOVE COLUMN HOLE COVER SILENCER SHEET

(a) Remove the 2 clips and column hole cover silencer sheet.

40. SEPARATE STEERING INTERMEDIATE SHAFT (See page 51–22)

41. REMOVE FLOOR PANEL BRACE FRONT (2WD DRIVE TYPE)

(a) Remove the 2 nuts and floor panel brace front.

42. REMOVE EXHAUST PIPE ASSY CENTER (4WD DRIVE TYPE) (See page 11–51)

43. REMOVE PROPELLER W/CENTER BEARING SHAFT ASSY (4WD DRIVE TYPE) (See page 30–6)

44. REMOVE EXHAUST PIPE ASSY FRONT (See page 15–4)

45. REMOVE FRONT AXLE HUB LH NUT (See page 30–15)
SST 09930–00010

46. REMOVE FRONT AXLE HUB RH NUT
SST 09930–00010

HINT:
Perform the same procedure as above on the opposite side.

47. SEPARATE TIE ROD END SUB–ASSY LH (See page 30–15)
SST 09628–62011

48. SEPARATE TIE ROD END SUB–ASSY RH
SST 09628–62011

HINT:
Perform the same procedure as above on the opposite side.

49. SEPARATE FRONT STABILIZER LINK ASSY LH (See page 51–22)

50. SEPARATE FRONT STABILIZER LINK ASSY RH

HINT:
Perform the same procedure as above on the opposite side.

51. SEPARATE FRONT SUSPENSION ARM SUB–ASSY LOWER NO.1 LH (See page 30–15)

52. SEPARATE FRONT SUSPENSION ARM SUB–ASSY LOWER NO.1 RH

HINT:
Perform the same procedure as above on the opposite side.

53. SEPARATE FRONT AXLE ASSY LH (See page 30–15)

54. SEPARATE FRONT AXLE ASSY RH

HINT:
Perform the same procedure as above on the opposite side.

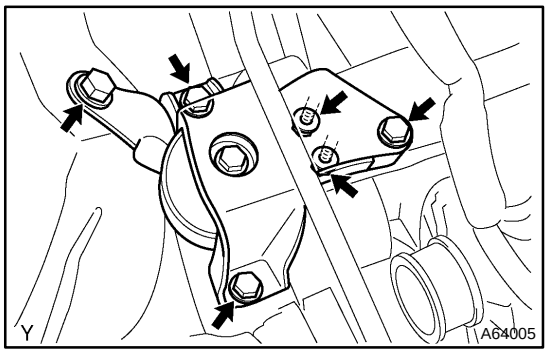

55. REMOVE ENGINE ASSEMBLY WITH TRANSAXLE

(a) Set the engine lifter.

(b) Remove the 4 bolts, 2 nuts and engine mounting insulator.

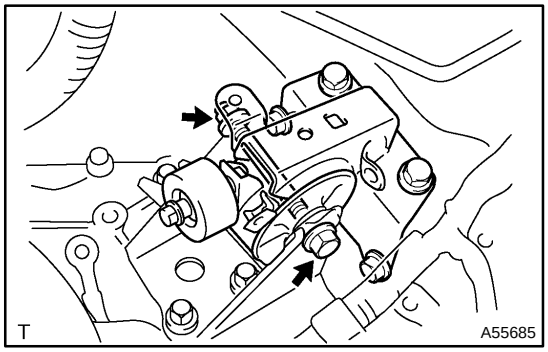

(c) Remove the through bolt and nut, detach the engine mounting insulator from the vehicle.

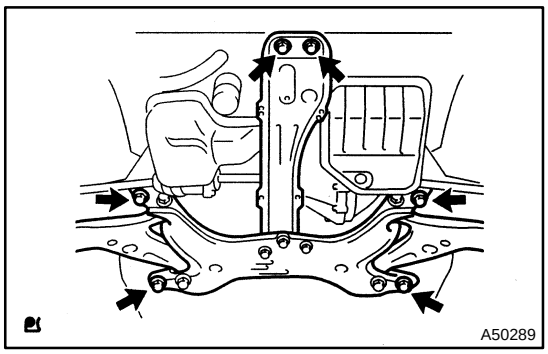

(d) Remove the 6 bolts, as shown in the illustration.
(e) Carefully, remove the engine with transaxle from the vehicle.

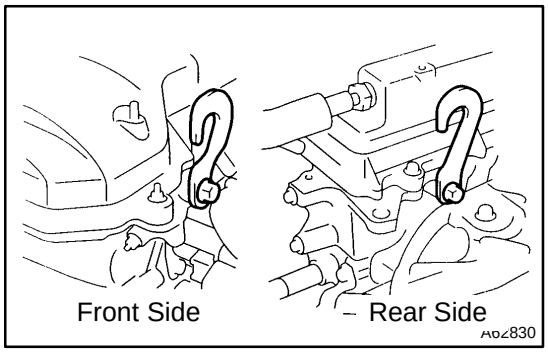

(f) Install the 2 engine hangers with the 2 bolts.
Part No.:
No. 1 engine hanger 12281–15040
No. 2 engine hanger 12281–22021
Bolt 91512–B1016
Torque: 38 N·m (387 kgf·cm, 28 ft·lbf)

HINT:
Be sure to install engine hanger (12281–22021) to the front side of the engine and engine hanger (12281–15040) to the rear side.

(g) Using the chain block and engine sling device, hang the engine assembly.

56. SEPARATE VANE PUMP ASSY (See page 51–8)

NOTICE:
Do not disconnect the hose.

57. REMOVE RACK & PINION POWER STEERING GEAR ASSY (4WD DRIVE TYPE) (See page 51–8)

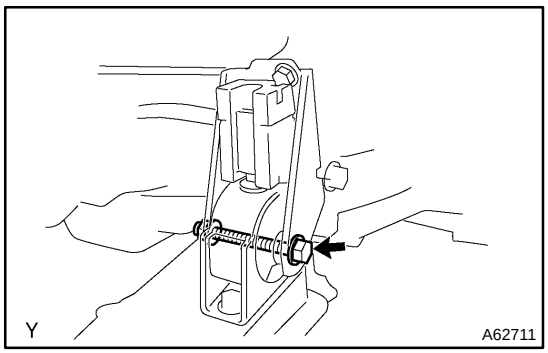

58. REMOVE FRONT SUSPENSION CROSSMENBER W/CENTER MENBER

(a) Remove the through bolt and a nut, detach the engine mounting insulator FR from the engine mounting bracket.

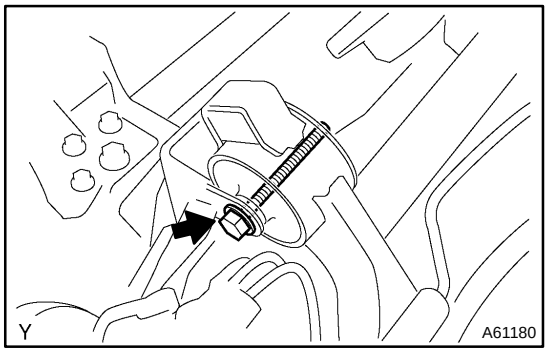

(b) Remove the through bolt, detach the engine mounting insulator RR from the suspension crossmember.
(c) Separate the engine and transaxle assembly from the suspension crossmember and engine mounting member.

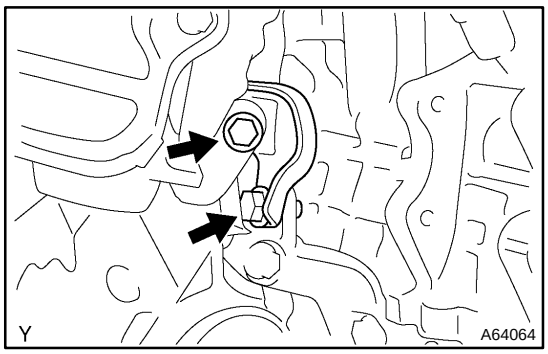

59. REMOVE MANIFOLD STAY (4WD DRIVE TYPE)

(a) Remove the 2 bolt and manifold stay.

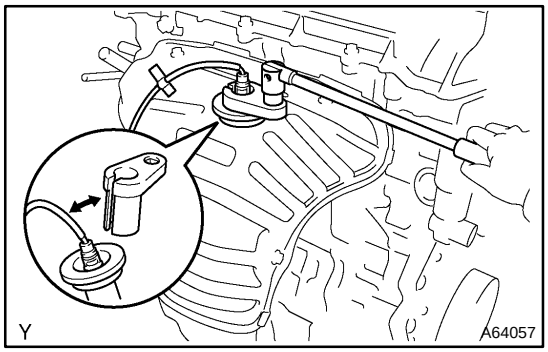

60. REMOVE OXYGEN SENSOR (4WD DRIVE TYPE)

(a) Using SST, remove the oxygen sensor.
SST 09224–00010

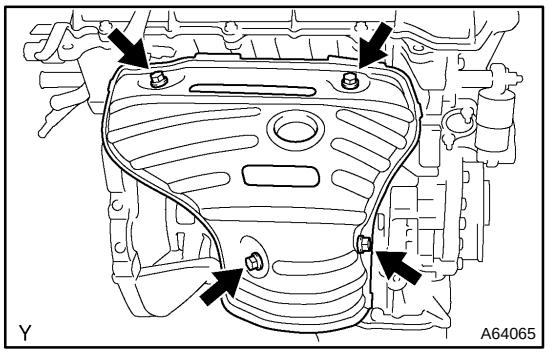

61. REMOVE EXHAUST MANIFOLD HEAT INSULATOR NO.1 (4WD DRIVE TYPE)

(a) Remove the 4 bolts and exhaust manifold heat insulator.

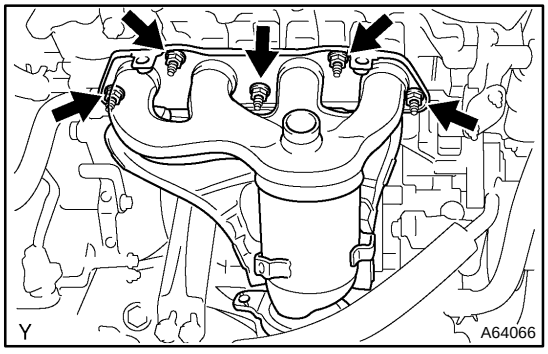

62. REMOVE EXHAUST MANIFOLD (4WD DRIVE TYPE)

(a) Remove the 5 nuts, exhaust manifold and gasket.

63. REMOVE STARTER ASSY (See page 19–3)
64. REMOVE MANUAL TRANSAXLE ASSY (M/T TRANSAXLE) (See page 41–17)
65. REMOVE FRONT DRIVE SHAFT ASSY RH (4WD DRIVE TYPE) (See page 31–11)
66. TRANSVERSE ENGINE ENGINE MOUNTING BRACKET (4WD DRIVE TYPE) (See page 31–11)
67. REMOVE TRANSFER STIFFENER PLATE CENTER (4WD DRIVE TYPE) (See page 31–11)
68. REMOVE TRANSFER STIFFENER PLATE RH (4WD DRIVE TYPE) (See page 31–11)
69. REMOVE TRANSFER ASSY (4WD DRIVE TYPE) (See page 31–11)
70. REMOVE AUTOMATIC TRANSAXLE ASSY (A/T TRANSAXLE, 2WD DRIVE TYPE) (See page 40–12)

71. REMOVE AUTOMATIC TRANSAXLE ASSY (A/T TRANSAXLE, 4WD DRIVE TYPE) (See page 40–36)

72. REMOVE CLUTCH COVER ASSY (M/T TRANSAXLE) (See page 42–18)

73. REMOVE CLUTCH DISC ASSY (M/T TRANSAXLE) (See page 42–18)

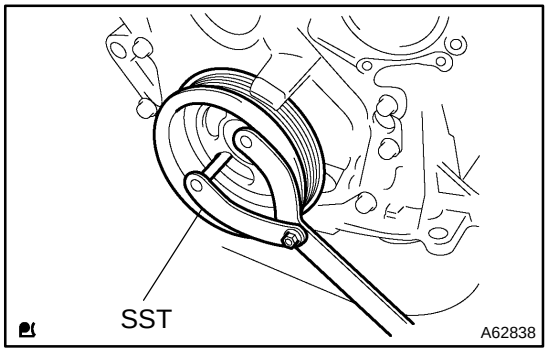

74. REMOVE FLYWHEEL SUB–ASSY (M/T TRANSAXLE)

(a) Fix the crankshaft with SST, then remove the 8 bolts and flywheel.

SST 09960–10010 (09962–01000, 09963–01000)

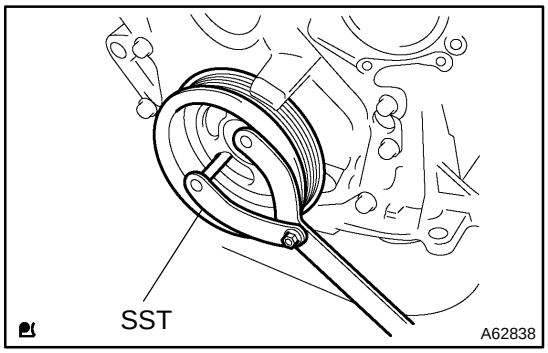

75. REMOVE DRIVE PLATE & RING GEAR SUB–ASSY (A/T TRANSAXLE)

(a) Fix the crankshaft with SST, then remove the 8 bolts and drive plate & ring gear.

SST 09960–10010 (09962–01000, 09963–01000)

76. REMOVE GENERATOR ASSY (See page 19–15)

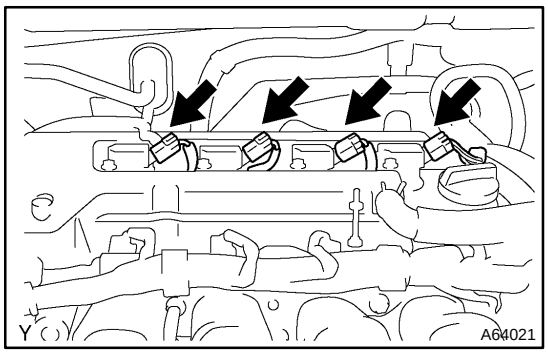

77. REMOVE IGNITION COIL ASSY

(a) Disconnect the 4 ignition coil connectors.

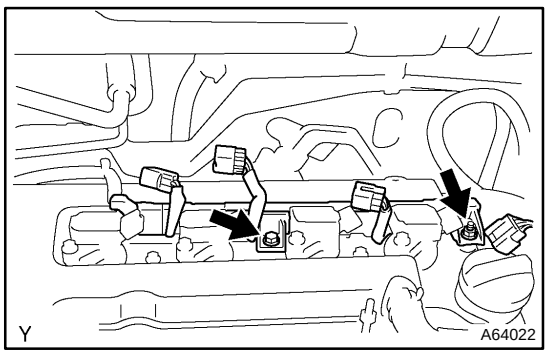

(b) Remove the bolt and nut installing the engine wire.

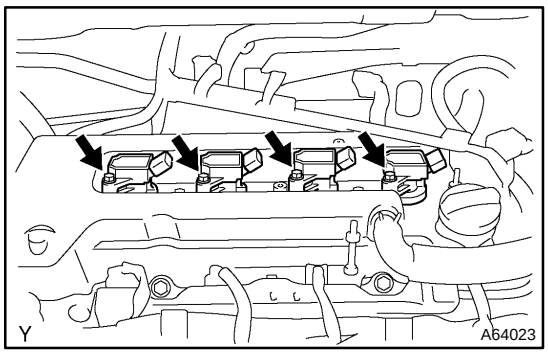

(c) Remove the 4 bolts and 4 ignition coils.

78. REMOVE FUEL DELIVERY PIPE SUB–ASSY (See page 11–10)

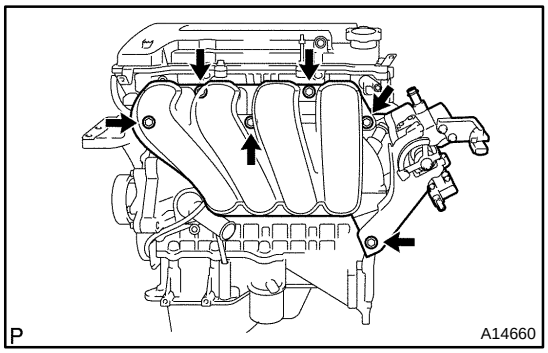

79. REMOVE INTAKE MANIFOLD

(a) Disconnect the 2 water hoses from the throttle body.
(b) Disconnect the 2 vacuum hoses from the intake manifold.
(c) Remove the 4 bolts, 2 nut, 2 wire brackets, the intake manifold and throttle body assembly.
(d) Remove the gasket from the intake manifold and throttle body assembly.

80. REMOVE OIL LEVEL GAGE SUB–ASSY

(a) Remove the oil level gage guide from the oil level gage guide.

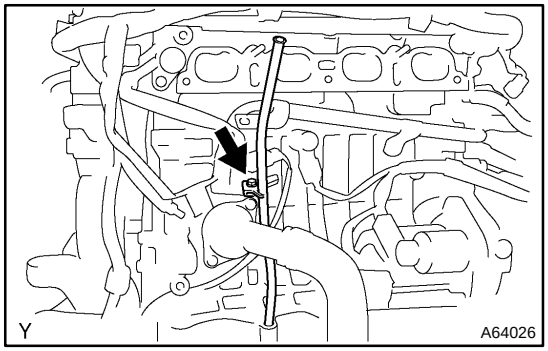

81. REMOVE OIL LEVEL GAGE GUIDE

(a) Remove the bolt and oil level gage guide.

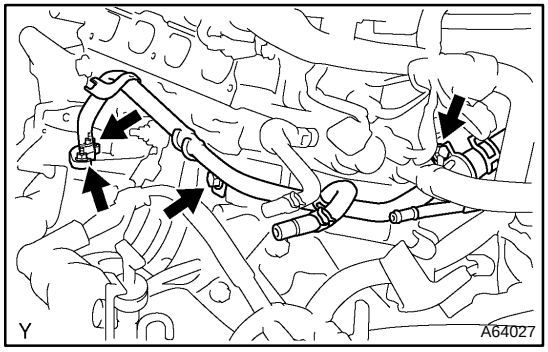

82. REMOVE WATER BY–PASS PIPE NO.1

(a) Remove the 2 bolts, 2 nuts, water by–pass pipe and gasket.

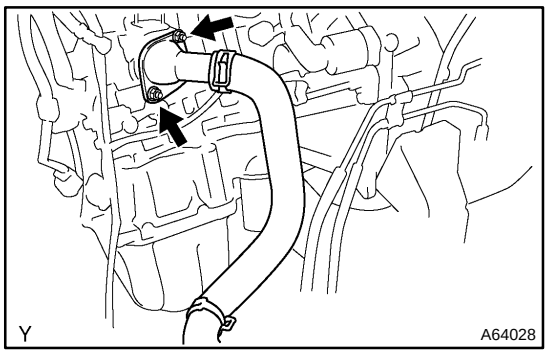

83. REMOVE WATER INLET

(a) Remove the 2 nuts and water inlet.

84. REMOVE THERMOSTAT

85. REMOVE ENGINE OIL PRESSURE SWITCH ASSY (See page 17–1)

SST 09268–46021

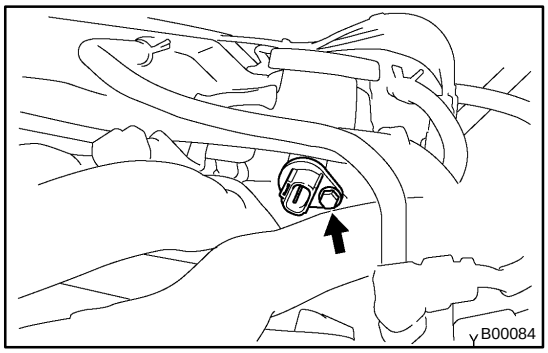

86. REMOVE CRANK POSITION SENSOR NO.1

(a) Remove the bolt and cam position sensor.

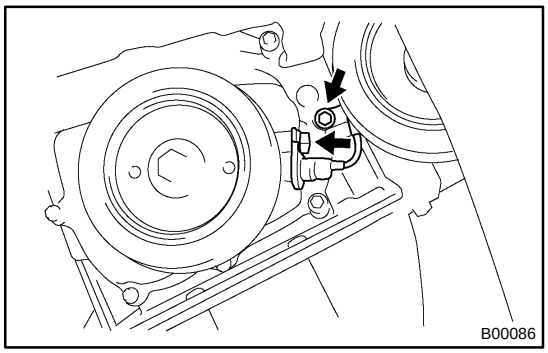

87. REMOVE CRANK POSITION SENSOR

(a) Remove the 2 bolts and crank position sensor.

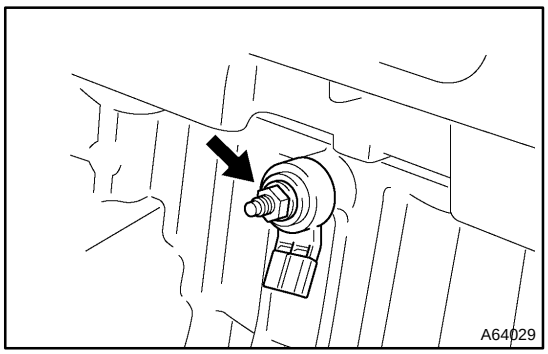

88. REMOVE KNOCK CONTROL SENSOR

(a) Remove the nut and knock control sensor.

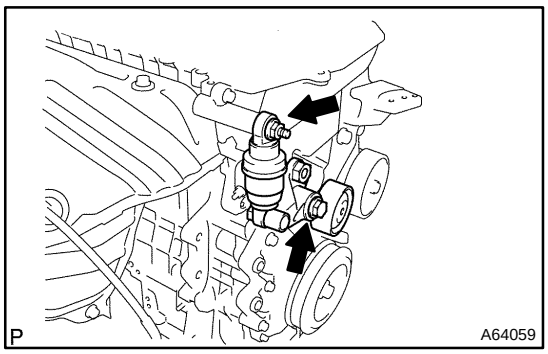

89. REMOVE V–RIBBED BELT TENSIONER ASSY

(a) Remove the bolts, nut and V–ribbed belt tensioner.

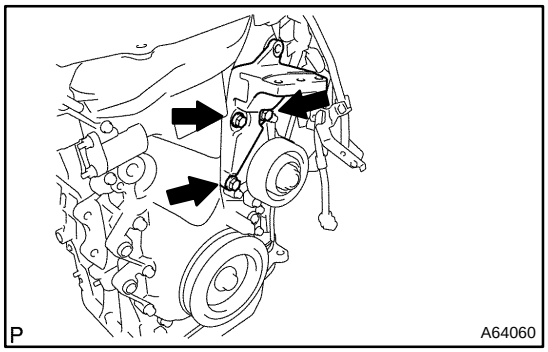

90. REMOVE TRANSVERSE ENGINE ENGINE MOUNTING BRACKET

(a) Remove the 3 bolts and transverse engine mounting bracket.

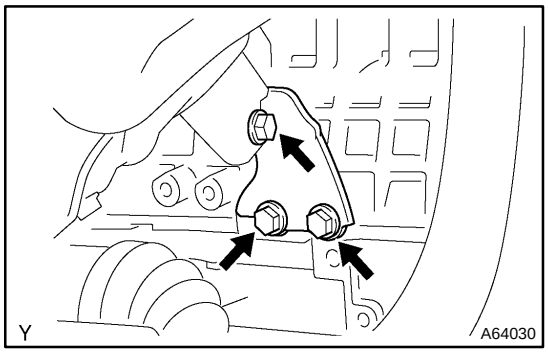

91. REMOVE MANIFOLD STAY (2WD DRIVE TYPE)

(a) Remove the 3 bolts and manifold stay.

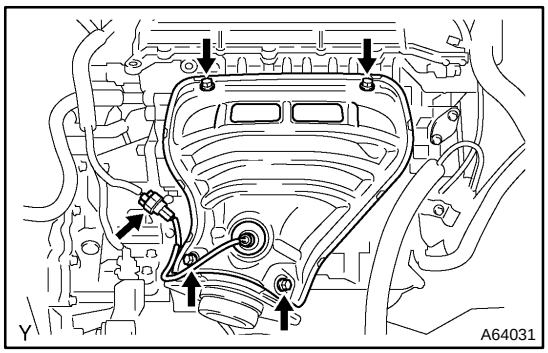

92. REMOVE EXHAUST MANIFOLD HEAT INSULATOR NO.1 (2WD DRIVE TYPE)

(a) Remove the 4 bolts and exhaust manifold heat insulator.

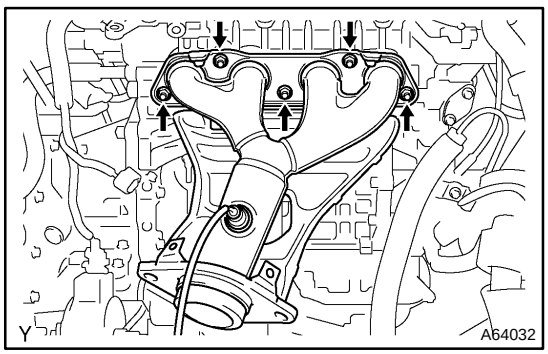

93. REMOVE EXHAUST MANIFOLD (2WD DRIVE TYPE)

(a) Remove the 5 nuts, exhaust manifold and gasket.

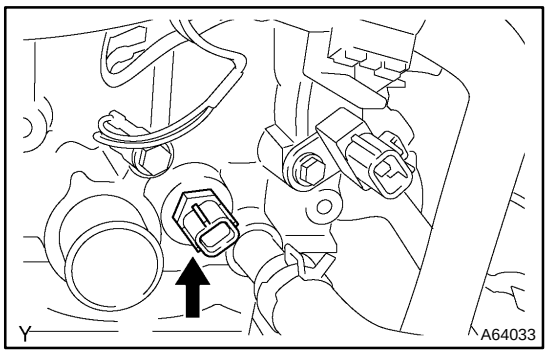

94. REMOVE E.F.I. ENGINE COOLANT TEMPERATURE SENSOR

(a) Using SST, remove the E.F.I. engine coolant temperature sensor.
SST 09817–33190

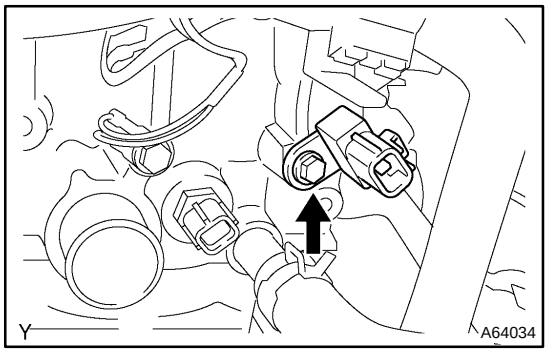

95. REMOVE RADIO SETTING CONDENSER

(a) Remove the bolt and condenser.

96. REMOVE WATER BY–PASS HOSE NO.2

97. REMOVE RADIATOR HOSE INLET

98. REMOVE HEATER INLET WATER HOSE

99. REPLACE ENGINE ASSY, PARTIAL

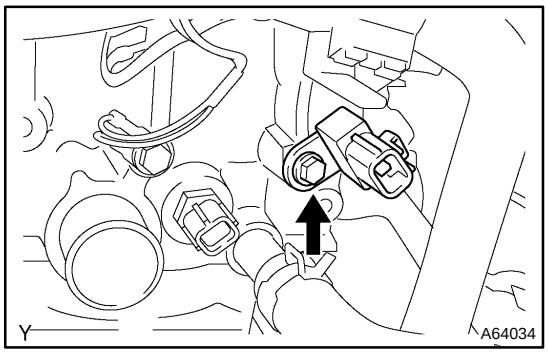

100. INSTALL RADIO SETTING CONDENSER

(a) Install the condenser with the bolt.
Torque: 10 N·m (102 kgf·cm, 7 ft·lbf)

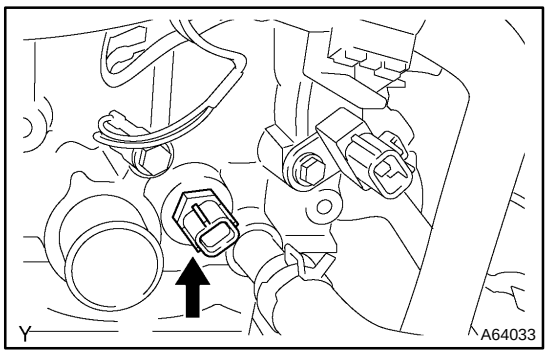

101. INSTALL E.F.I. ENGINE COOLANT TEMPERATURE SENSOR

(a) Install a new gasket to the E.F.I. engine coolant temperature sensor.

(b) Using SST, install the E.F.I. engine coolant temperature sensor.
SST 09817–33190
Torque: 20 N·m (204 kgf·cm, 15 ft·lbf)

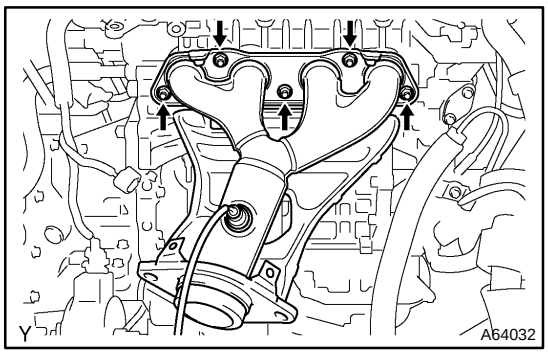

102. INSTALL EXHAUST MANIFOLD (2WD DRIVE TYPE)

(a) Install a new gasket and the exhaust manifold with the 5 nuts.

Torque: 37 N·m (377 kgf·cm, 27 ft·lbf)

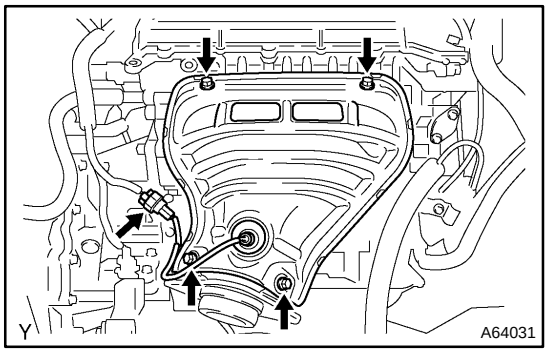

103. INSTALL EXHAUST MANIFOLD HEAT INSULATOR NO.1 (2WD DRIVE TYPE)

(a) Install the exhaust manifold heat insulator with the 4 bolts.

Torque: 18 N·m (184 kgf·cm, 13 ft·lbf)

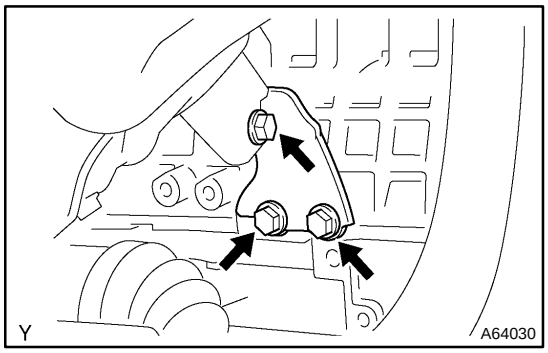

104. INSTALL MANIFOLD STAY (2WD DRIVE TYPE)

(a) Install the manifold stay with the 3 bolts.

Torque: 49 N·m (500 kgf·cm, 36 ft·lbf)

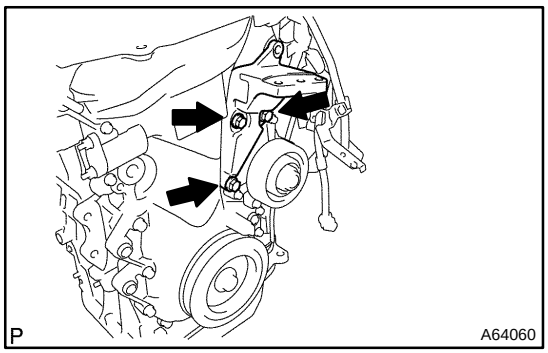

105. INSTALL TRANSVERSE ENGINE ENGINE MOUNTING BRACKET

(a) Install the transverse engine mounting bracket with the 3 bolts.

Torque: 47 N·m (479 kgf·cm, 35 ft·lbf)

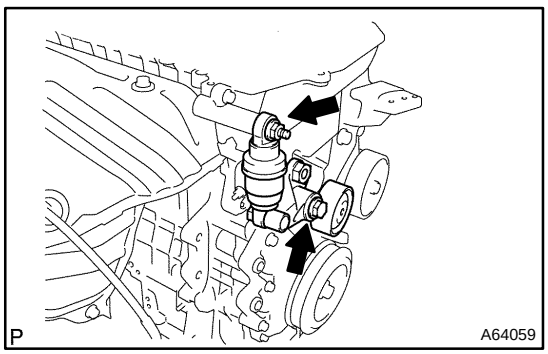

106. INSTALL V–RIBBED BELT TENSIONER ASSY

(a) Install the V–ribbed belt tensioner with the bolt and nut.

Torque:
Nut 29 N·m (296 kgf·cm, 21 ft·lbf)
Bolt 69 N·m (704 kgf·cm, 51 ft·lbf)

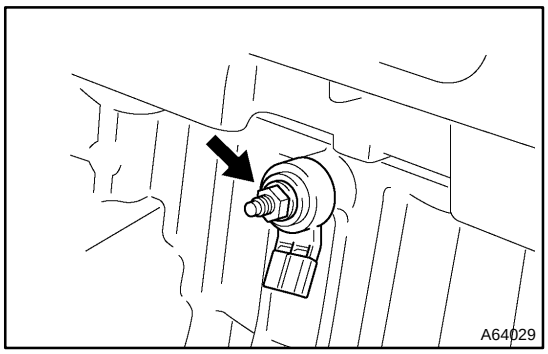

107. INSTALL KNOCK CONTROL SENSOR

(a) Install the knock control sensor with the nut.
Torque: 20 N·m (204 kgf·cm, 15 ft·lbf)

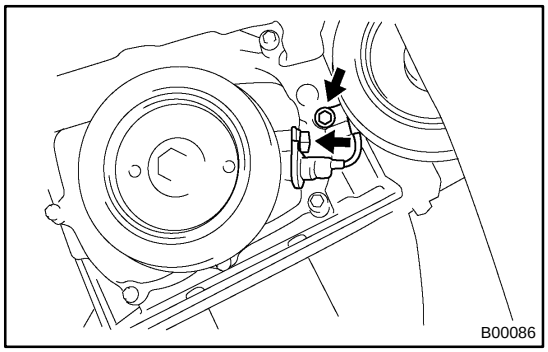

108. INSTALL CRANK POSITION SENSOR

(a) Install the crank position sensor with the 2 bolts.
Torque: 9.0 N·m (92 kgf·cm, 80 in.·lbf)

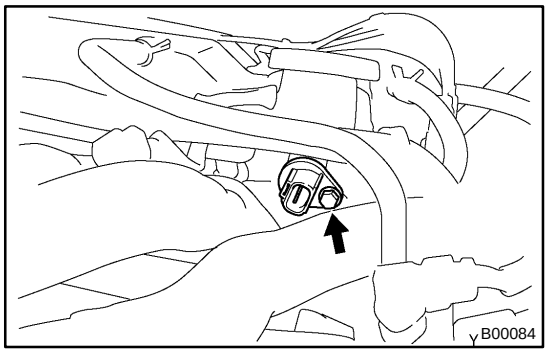

109. INSTALL CRANK POSITION SENSOR NO.1

(a) Install the cam position sensor with the bolts.
Torque: 9.0 N·m (92 kgf·cm, 80 in.·lbf)

110. INSTALL ENGINE OIL PRESSURE SWITCH ASSY (See page 17–1)
Adhesive: Part No.08833 – 00080, THREE BOND 1344.
SST 09268–46021

111. INSTALL THERMOSTAT (See page 16–13)

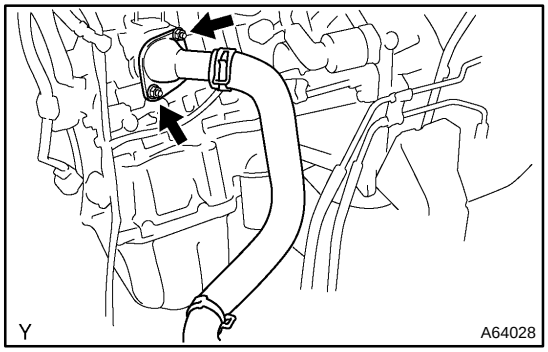

112. INSTALL WATER INLET

(a) Install the water inlet with the 2 nuts.
Torque: 11 N·m (112 kgf·cm, 8 ft·lbf)

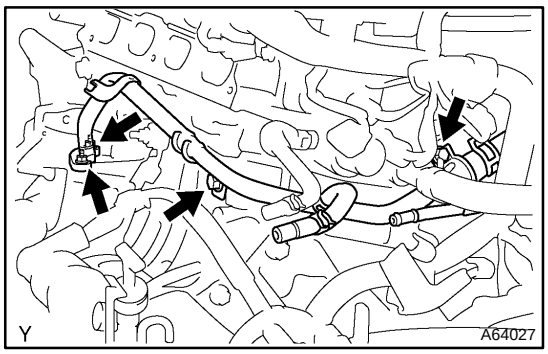

113. INSTALL WATER BY–PASS PIPE NO.1

(a) Install a new gasket and water by–pass with the 2 nuts and 2 bolts.
Torque: 9.0 N·m (92 kgf·cm, 80 in.·lbf)

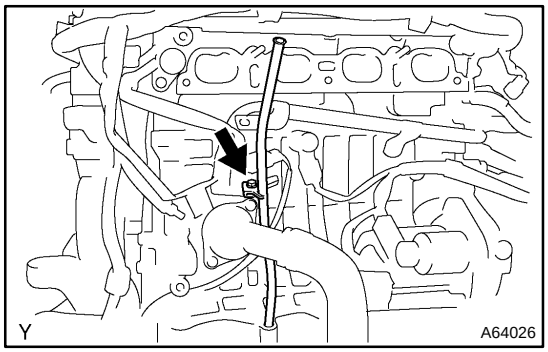

114. INSTALL OIL LEVEL GAGE GUIDE

(a) Apply a light coat of a new O–ring and install it to the oil level gage guide.
(b) Install the oil level gage guide with the bolt.
Torque: 13 N·m (133 kgf·cm, 10 ft·lbf)

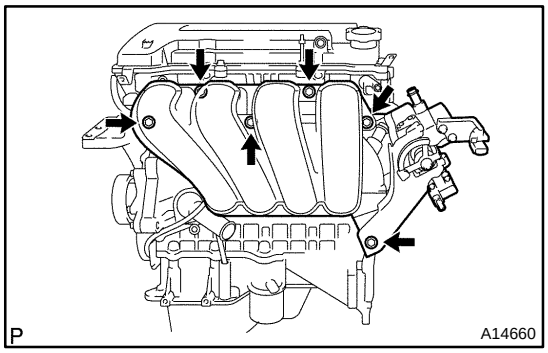

115. INSTALL INTAKE MANIFOLD

(a) Install a new gasket to the intake manifold.
(b) Install the intake manifold and throttle body assembly with the 2 brackets, 4 bolts and 2 nuts. Uniformly tighten the bolts and nuts in several passes.
Torque: 30 N·m (306 kgf·cm, 22 ft·lbf)
(c) Connect the 2 vacuum hoses to the intake manifold.
(d) Connect the 2 water hoses to the throttle body.

116. INSTALL FUEL DELIVERY PIPE SUB–ASSY (See page 11–10)

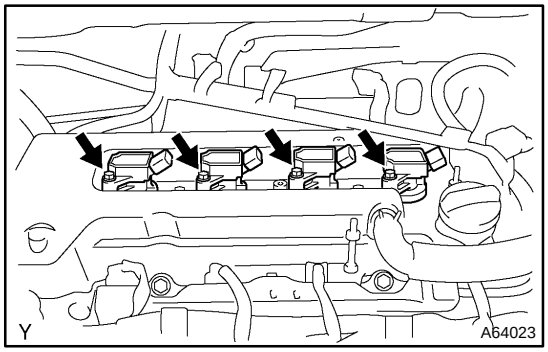

117. INSTALL IGNITION COIL ASSY

(a) Install the 4 ignition coils with the 4 bolts.
Torque: 9.0 N·m (92 kgf·cm, 80 in.·lbf)

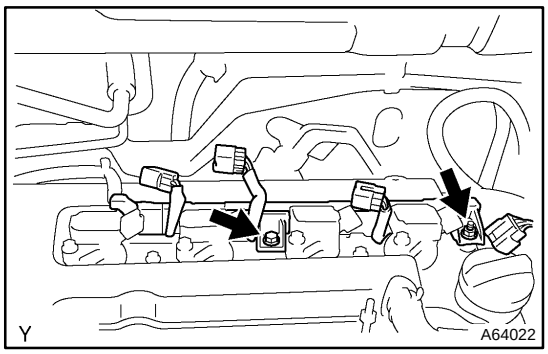

(b) Install the engine wire with the bolt and nut.
Torque: 9.0 N·m (92 kgf·cm, 80 in.·lbf)

118. INSTALL GENERATOR ASSY (See page 19–15)

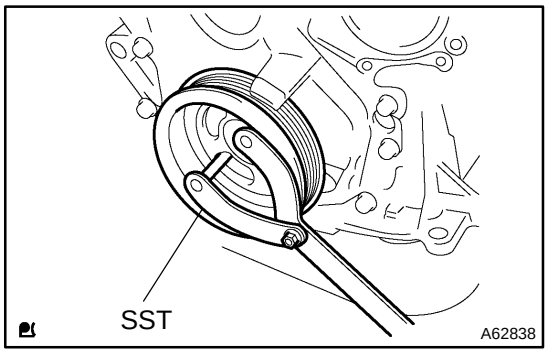

119. INSTALL FLYWHEEL SUB–ASSY (M/T TRANSAXLE)
(a) Fix the crankshaft with SST.
SST 09960–10010 (09962–01000, 09963–01000)

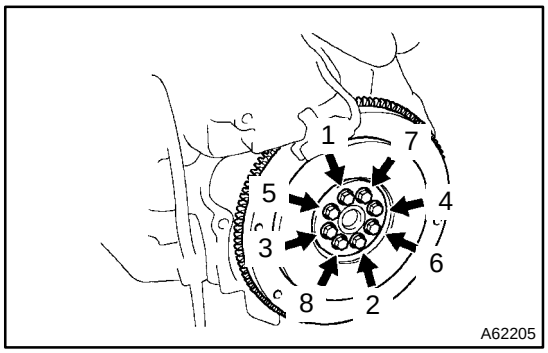

(b) Clean the bolt and bolt hole.
(c) Apply adhesive to the bolts.
Adhesive:
Part No. 09330–00070, THREE BOND or equivalent.
(d) Install and uniformly tighten the 8 bolts, in several passes, in the sequence shown.
Torque: 49 N·m (500 kgf·cm, 36 ft·lbf)

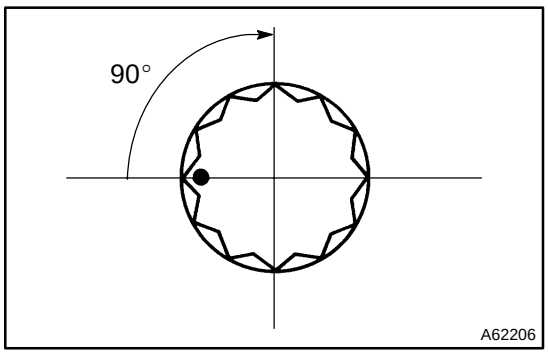

(e) Mark the bolts with paint.
(f) Retighten the bolts by an additional 90°.
(g) Check that the point marked bolts are moved at 90° angle.

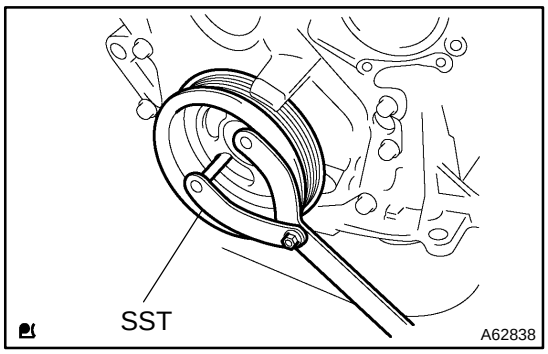

120. INSTALL DRIVE PLATE & RING GEAR SUB–ASSY (A/T TRANSAXLE)

(a) Fix the crankshaft with SST.
SST 09960–10010 (09962–01000, 09963–01000)

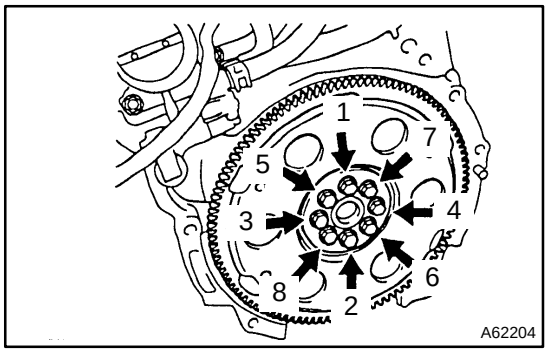

(b) Clean the bolt and bolt hole.
(c) Apply adhesive to the bolts.
Adhesive:
Part No. 09330–00070, THREE BOND or equivalent.
(d) Install and uniformly tighten the 8 bolts, in several passes, in the sequence shown.
Torque: 88 N·m (897 kgf·cm, 65 ft·lbf)

121. INSTALL CLUTCH DISC ASSY (M/T TRANSAXLE) (See page 42–18)
SST 09301–00210
122. INSTALL CLUTCH COVER ASSY (M/T TRANSAXLE) (See page 42–18)
SST 09301–00210
123. INSTALL MANUAL TRANSAXLE ASSY (M/T TRANSAXLE) (See page 41–17)
124. INSTALL AUTOMATIC TRANSAXLE ASSY (A/T TRANSAXLE, 2WD DRIVE TYPE) (See page 40–12)
125. INSTALL AUTOMATIC TRANSAXLE ASSY (A/T TRANSAXLE, 4WD DRIVE TYPE) (See page 40–36)
126. INSTALL TRANSFER ASSY (4WD DRIVE TYPE) (See page 31–11)
127. INSTALL TRANSFER STIFFENER PLATE RH (4WD DRIVE TYPE) (See page 31–11)
128. INSTALL TRANSFER STIFFENER PLATE CENTER (4WD DRIVE TYPE) (See page 31–11)
129. INSTALL TRANSVERSE ENGINE ENGINE MOUNTING BRACKET (4WD DRIVE TYPE) (See page 31–11)
130. INSTALL FRONT DRIVE SHAFT ASSY RH (4WD DRIVE TYPE) (See page 31–11)
131. INSTALL STARTER ASSY (See page 19–3)

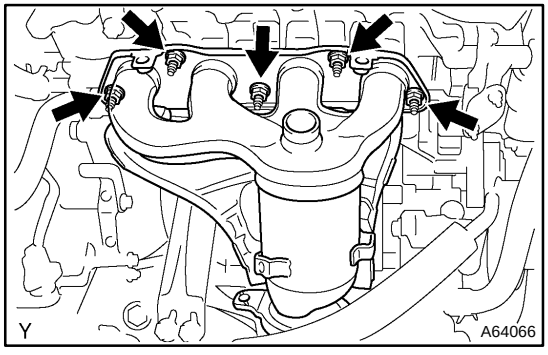

132. INSTALL EXHAUST MANIFOLD (4WD DRIVE TYPE)

(a) Install a new gasket and the exhaust manifold with the 5 nuts.
Torque: 37 N·m (377 kgf·cm, 27 ft·lbf)

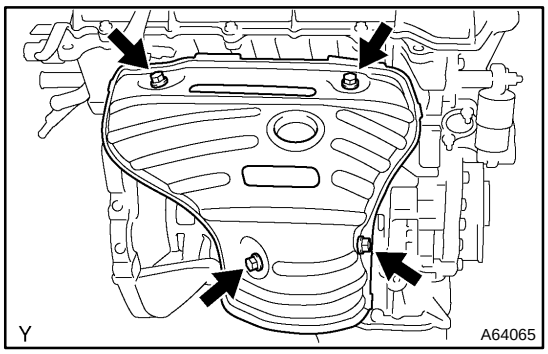

133. INSTALL EXHAUST MANIFOLD HEAT INSULATOR NO.1 (4WD DRIVE TYPE)

(a) Install the exhaust manifold heat insulator with the 4 bolts.
Torque: 18 N·m (184 kgf·cm, 13 ft·lbf)

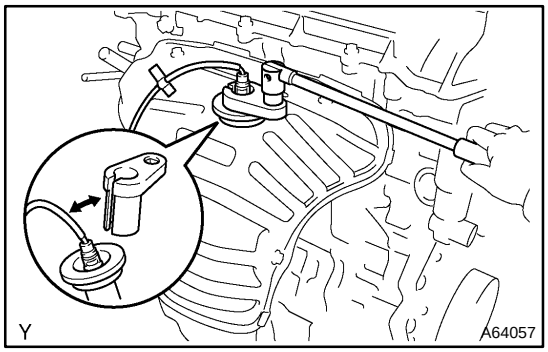

134. INSTALL OXYGEN SENSOR (4WD DRIVE TYPE)

(a) Using SST, install the oxygen sensor.
SST 09224–00010
Torque: 44 N·m (450 kgf·cm, 33 ft·lbf)

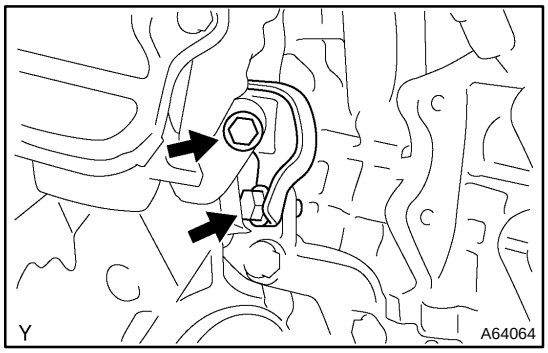

135. INSTALL MANIFOLD STAY (4WD DRIVE TYPE)

(a) Install the manifold stay with the 2 bolts.
Torque: 49 N·m (500 kgf·cm, 36 ft·lbf)

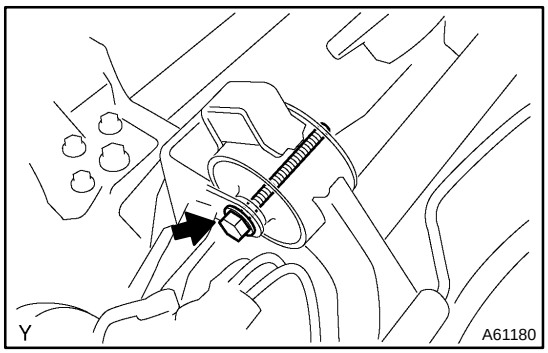

136. INSTALL FRONT SUSPENSION CROSSMENBER W/CENTER MENBER

(a) Attach the engine and transaxle assembly to the suspension crossmember and engine mounting member.

(b) Install the bolt holding the rear engine mounting bracket to the mounting insulator.
Torque: 87 N·m (887 kgf·cm, 64 ft·lbf)

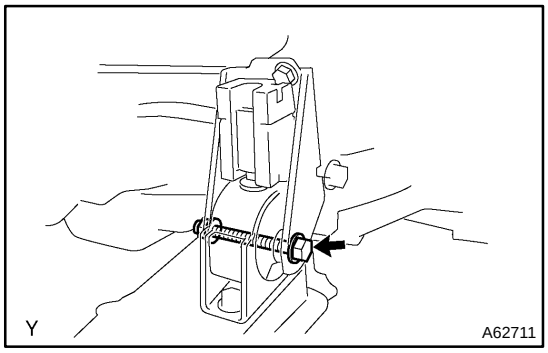

(c) Install the bolt holding the front engine mounting bracket to the mounting insulator.
Torque: 52 N·m (530 kgf·cm, 38 ft·lbf)

137. INSTALL RACK & PINION POWER STEERING GEAR ASSY (4WD DRIVE TYPE) (see page 51–8)

SST 09023–38200

138. INSTALL VANE PUMP ASSY (See page 51–8)

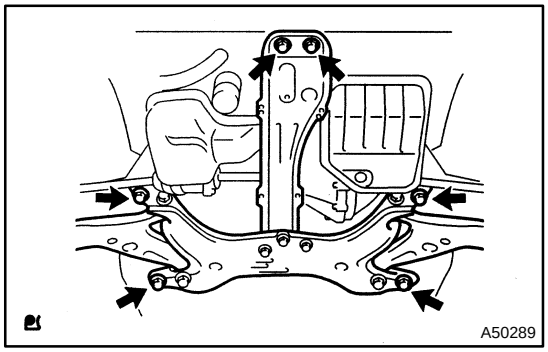

139. INSTALL ENGINE ASSEMBLY WITH TRANSAXLE

(a) Set the engine with transaxle on the engine lifter.

(b) Install the engine with transaxle to the vehicle.

(c) Temporarily, install the suspension crossmember and 6 bolts.

(d) Install the engine mounting insulator LH.
Torque: 80 N·m (816 kgf·cm, 59 ft·lbf)

(e) Install the engine mounting insulator RH.
Torque: 52 N·m (530 kgf·cm, 38 ft·lbf)

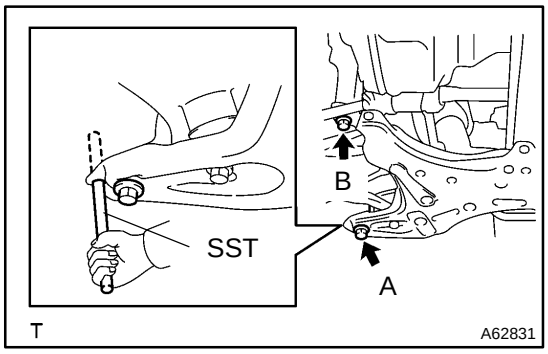

(f) Insert SST to the positioning holes on the right handle crossmember and on the right–handle of the vehicle.
SST 09670–00010

(g) Temporarily tighten the bolt A first, then Bolt B.

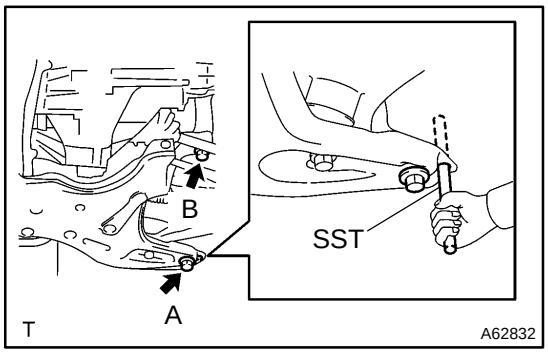

(h) Insert SST to the positioning holes on the left handle crossmember and on the left–handle of the vehicle.
SST 09670–00010

(i) Temporarily tighten the bolt A first, then Bolt B.

(j) Insert SST to the positioning holes on the right–handle crossmember and right–handle of the vehicle, then tighten the bolts with a specified torque.

(k) Insert SST to the positioning holes on the right–handle crossmember and left–handle of the vehicle, then tighten the bolts with a specified torque.
SST 09670–00010
Torque:
Bolt A 157N·m (1,601 kgf·cm, 116 ft·lbf)
Bolt B 113N·m (1,152 kgf·cm, 83 ft·lbf)

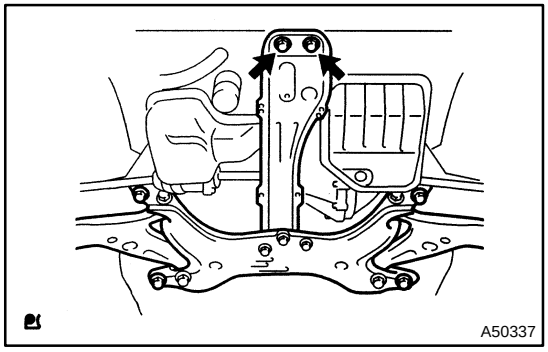

(l) Tighten the 2 bolts, as shown in the illustration.
Torque: 39 N·m (398 kgf·cm, 29 ft·lbf)

NOTICE:
After installing the crossmember, check that the positioning holes on the crossmember and vehicle are aligned with each other.

140. INSTALL FRONT SUSPENSION ARM SUB–ASSY LOWER NO.1 LH (See page 30–15)

141. INSTALL FRONT SUSPENSION ARM SUB–ASSY LOWER NO.1 RH

HINT:

Perform the same procedure as above on the opposite side.

142. INSTALL FRONT STABILIZER LINK ASSY LH (See page 51–22)

143. INSTALL FRONT STABILIZER LINK ASSY RH

HINT:

Perform the same procedure as above on the opposite side.

144. INSTALL TIE ROD END SUB–ASSY LH (See page 30–15)

145. INSTALL TIE ROD END SUB–ASSY RH

HINT:

Perform the same procedure as above on the opposite side.

146. INSTALL FRONT AXLE HUB LH NUT (See page 30–15)

147. INSTALL FRONT AXLE HUB RH NUT

HINT:

Perform the same procedure as above on the opposite side.

148. TEMPORARY TIGHTEN PROPELLER W/CENTER BEARING SHAFT ASSY (4WD DRIVE TYPE) (See page 30–6)

149. INSTALL EXHAUST PIPE ASSY FRONT (See page 15–4)

150. INSTALL EXHAUST PIPE ASSY CENTER (4WD DRIVE TYPE) (See page 11–51)

151. INSTALL FLOOR PANEL BRACE FRONT

(a) Install front floor panel brace with the 2 nuts.

Torque: 30 N·m (306 kgf·cm, 22 ft·lbf)

152. INSTALL FRONT SEAT ASSY RH (4WD DRIVE TYPE) (See page 72–2)

153. INSTALL STEERING INTERMEDIATE SHAFT (See page 51–22)

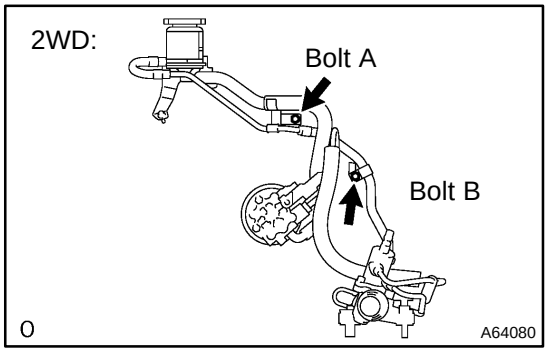

154. INSTALL RETURN TUBE SUB–ASSY

(a) 2WD

(1) Install the return tube with 2 bolts.

Torque:

Bolt A 5.0 N·m (51 kgf·cm, 44 in.·lbf)

Bolt B 7.8 N·m (80 kgf·cm, 69 in.·lbf)

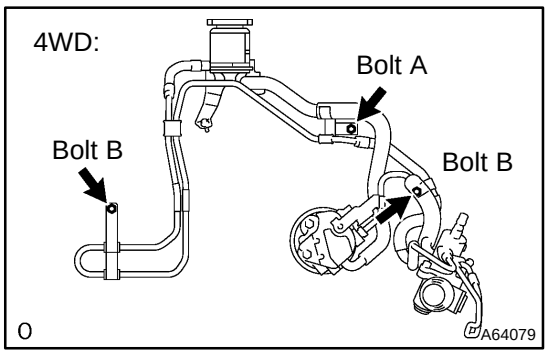

(b) 4WD

(1) Install the return tube with 3 bolts.

Torque:

Bolt A 5.0 N·m (51 kgf·cm, 44 in.·lbf)

Bolt B 7.8 N·m (80 kgf·cm, 69 in.·lbf)

155. INSTALL COMPRESSOR AND MAGNETIC CLUTCH (W/ AIR CONDITIONER) (See page 55–40)

156. INSTALL CLUTCH RELEASE CYLINDER ASSY (M/T TRANSAXLE)(See page 41–17)

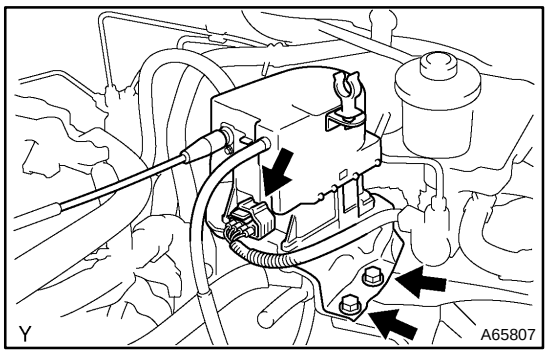

157. INSTALL CRUISE CONTROL ACTUATOR ASSY (W/ CRUISE CONTROL)

(a) Install the actuator with the 2 bolts.
Torque: 6.0 N·m (61 kgf·cm, 53 in.·lbf)

(b) Connect the actuator connector.

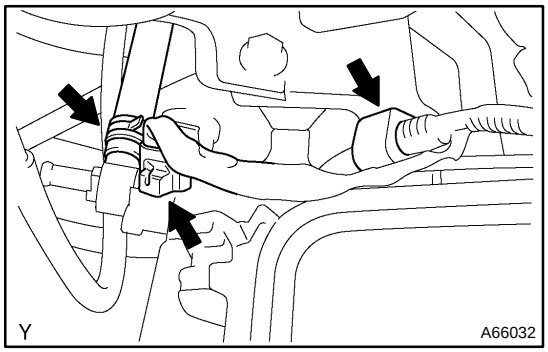

158. INSTALL AIR CLEANER ASSEMBLY WITH HOSE

(a) Install the air cleaner case with the 3 bolts.
Torque: 7.0 N·m (71 kgf·cm, 62 in.·lbf)

(b) Connect the wireharnnes clamp, connector and hose.

(c) Install the air filter.

(d) Install the air cleaner cap.

(e) Connect the air cleaner hose.

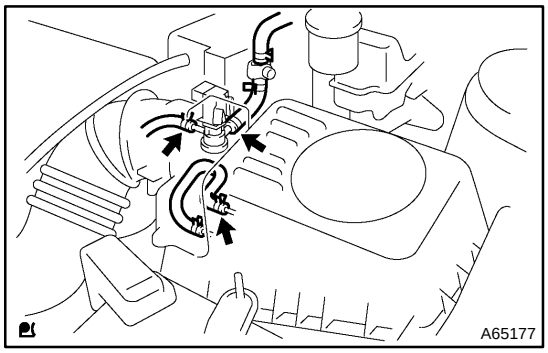

(f) Connect 3 vacuum hoses, as shown in the illustration.

(g) Connect the VSV connector.

(h) Connect the intake air flow meter connector.

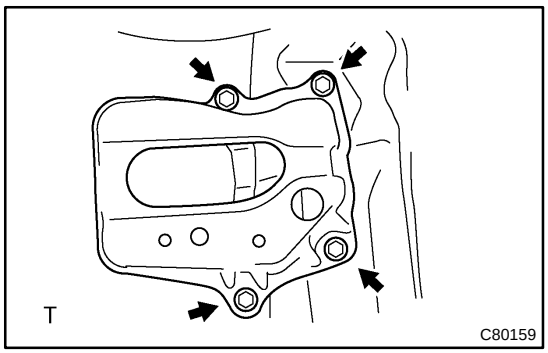

159. INSTALL BATTERY CARRIER

(a) Install the battery carrier with the 4 bolts.
Torque: 13 N·m (133 kgf·cm, 10 ft·lbf)

160. INSTALL BATTERY
Torque:
Bolt 5.0 N·m (51 kgf·cm, 44 in.·lbf)
Nut 3.0 – 4.0 N·m (31 – 41 kgf·cm, 27 – 35 in.·lbf)

161. INSTALL RADIATOR SUPPORT UPPER (W/ AIR CONDITIONER)

(a) Install the 2 radiator support uppers with the 2 bolts.
Torque: 19 N·m (194 kgf·cm, 14 ft·lbf)

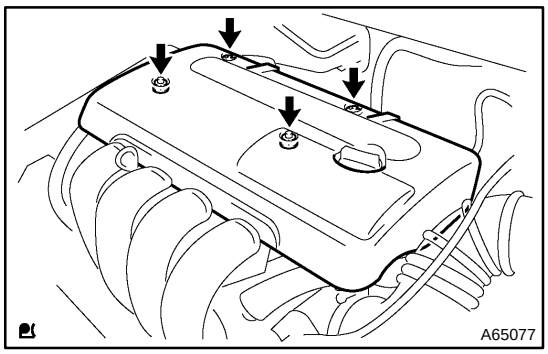

162. INSTALL CYLINDER HEAD COVER NO.2

(a) Install the cylinder head cover with the 2 nuts and 2 clips.
Torque: 7.0 N·m (71 kgf·cm, 62 in.·lbf)

163. INSTALL FRONT WHEELS
Torque: 103 N·m (1,050 kgf·cm, 76 ft·lbf)

164. ADD TRANSFER OIL (4WD DRIVE TYPE)

(a) Install a new gasket and the filler plug.
Torque: 49 N·m (500 kgf·cm, 36 ft·lbf)

165. ADD AUTOMATIC TRANSAXLE FLUID (4WD DRIVE TYPE)

166. ADD ENGINE OIL

167. ADD COOLANT (See page 16–6)

168. CHECK ENGINE OIL LEAK

169. CHECK ENGINE COOLANT LEAK (See page 16–6)

170. CHECK FUEL LEAK

171. CHECK EXHAUST GAS LEAK

172. INSPECT CHECK IDLE SPEED AND IGNITION TIMING (See page 14–1)
SST 09843–18040

173. INSPECT CO/HC (See page 14–1)

174. INSPECT AND ADJUST FRONT WHEEL ALIGNMENT (See page 26–6)

175. CHECK ABS SPEED SENSOR SIGNAL

EXHAUST PIPE (1ZZ–FE)

COMPONENTS

1504M–01

FF:

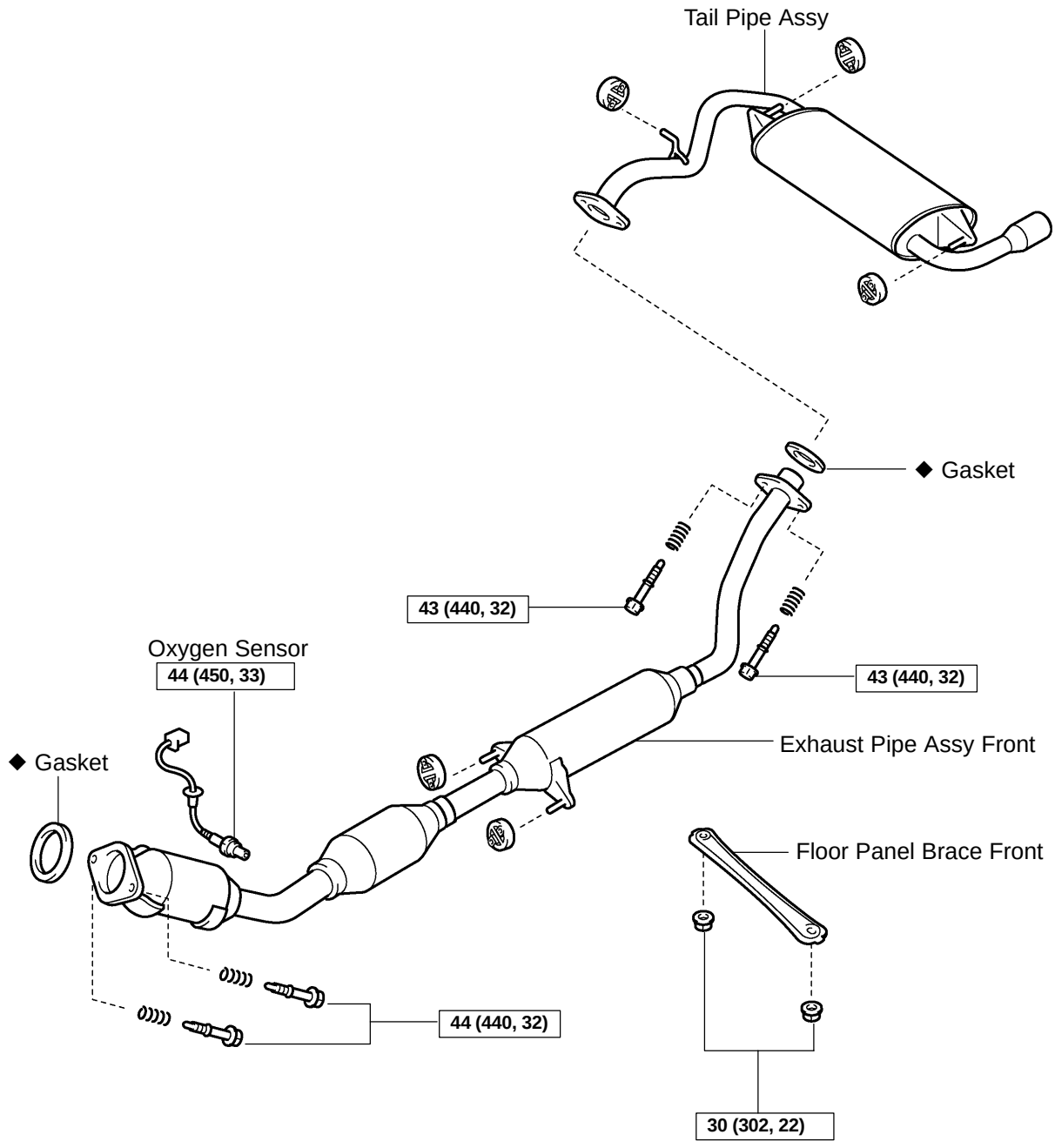

N·m (kgf·cm, ft·lbf): Specified torque

◆ Non–reusable part

A65223

4WD:

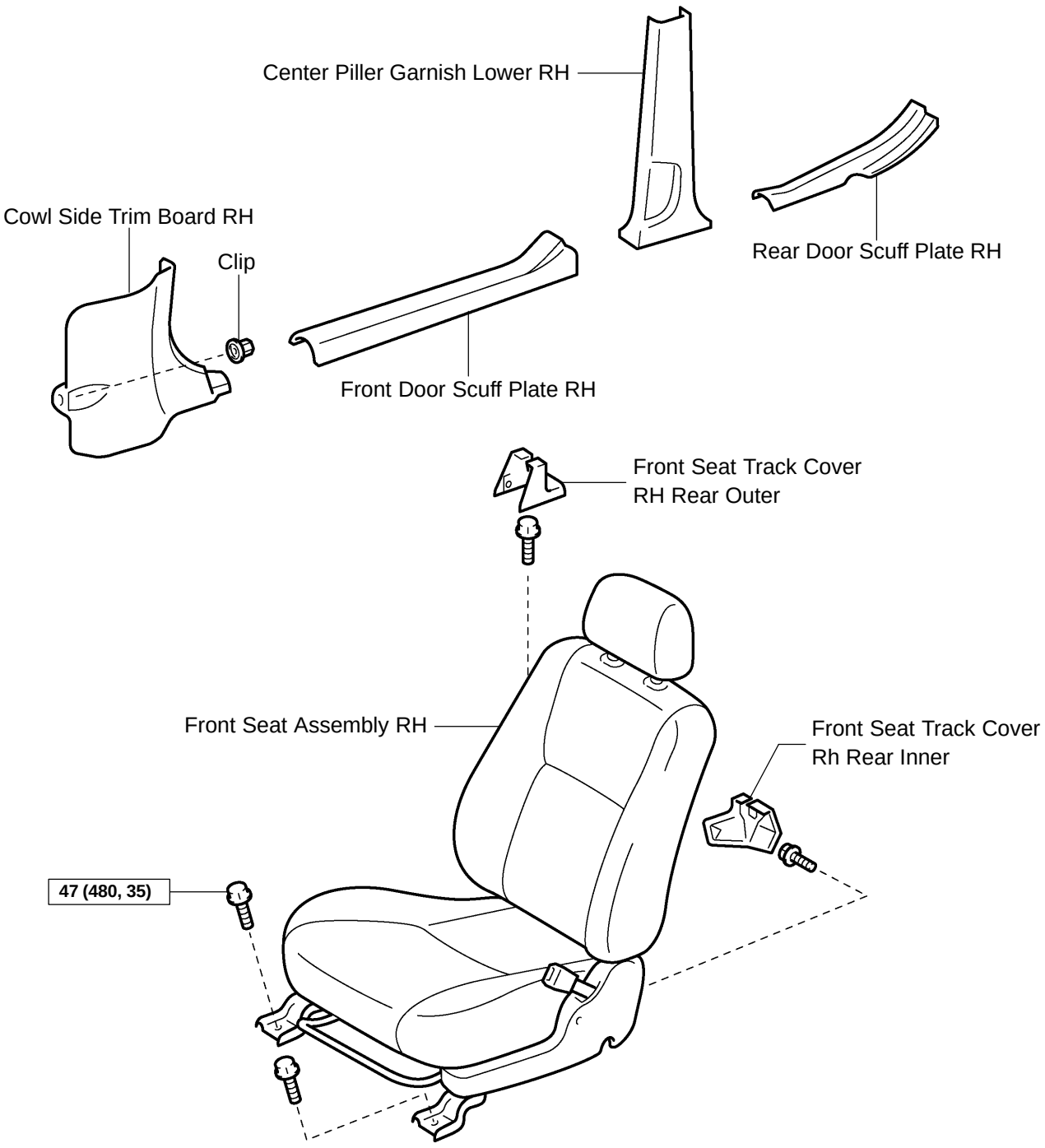

N·m (kgf·cm, ft·lbf): Specified torque

◆ Non–reusable part

A65621

4WD:

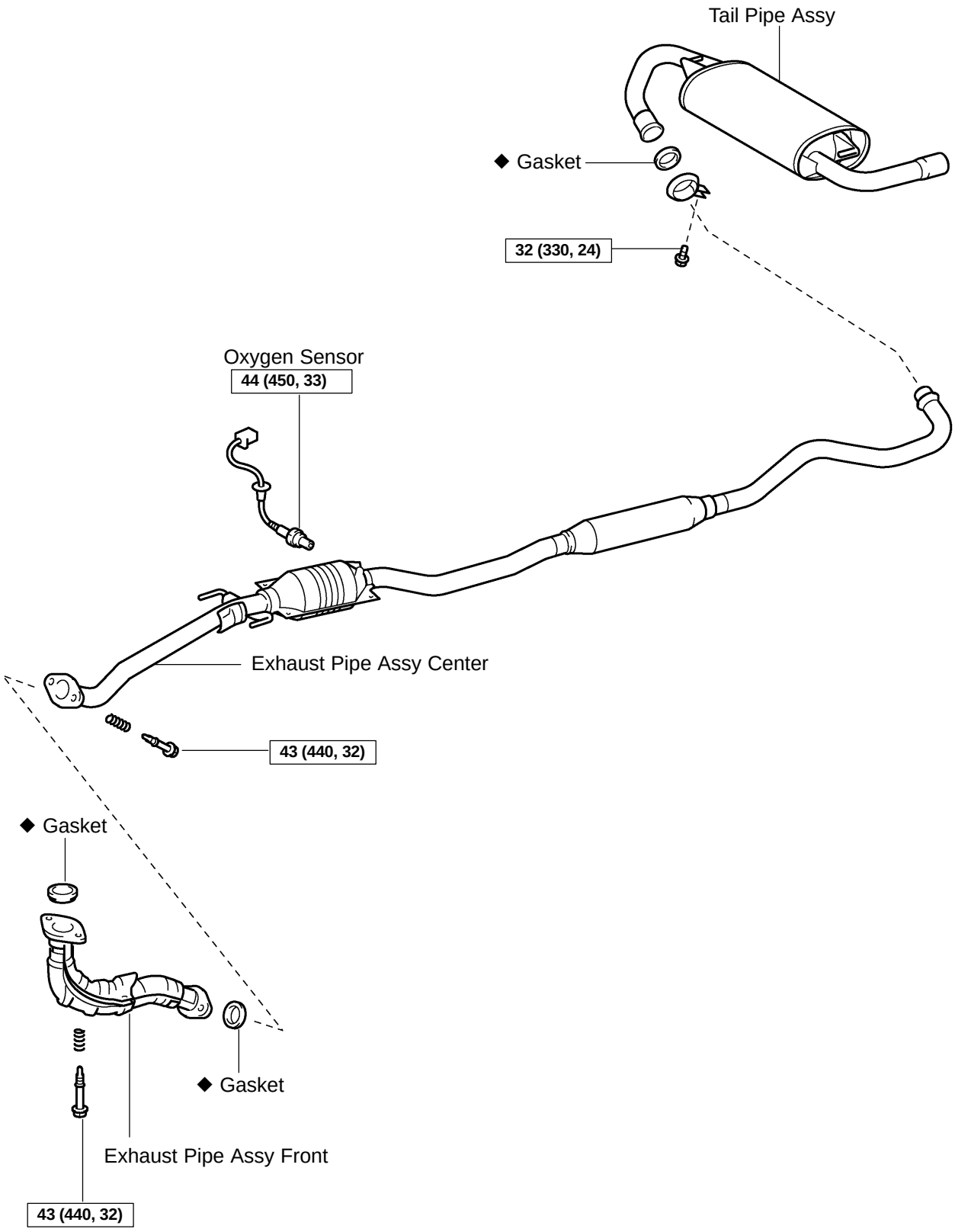

N·m (kgf·cm, ft·lbf): Specified torque

◆ Non–reusable part

A65214

1504N–01

Removal & Installation and Disassembly & Reassembly

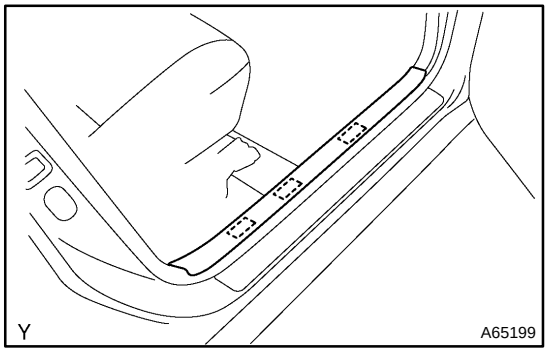

1. REMOVE FRONT DOOR SCUFF PLATE RH (4WD DRIVE TYPE)

(a) Using a screwdriver, remove the front door scuff plate RH.

HINT:

Tape the screwdriver tip before use.

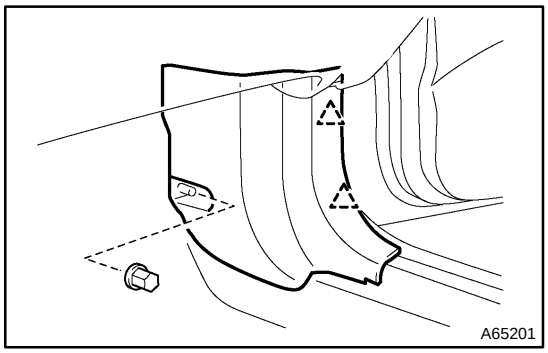

2. REMOVE COWL SIDE TRIM BOARD RH (4WD DRIVE TYPE)

(a) Remove the clip and cowl side trim boad.

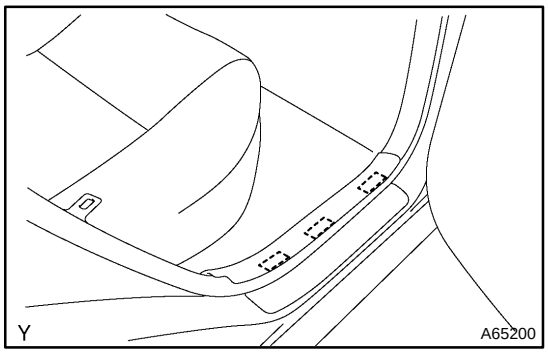

3. REMOVE REAR DOOR SCUFF PLATE RH (4WD DRIVE TYPE)

(a) Using a screwdriver, remove the rear door scuff plate RH.

HINT:

Tape the screwdriver tip before use.

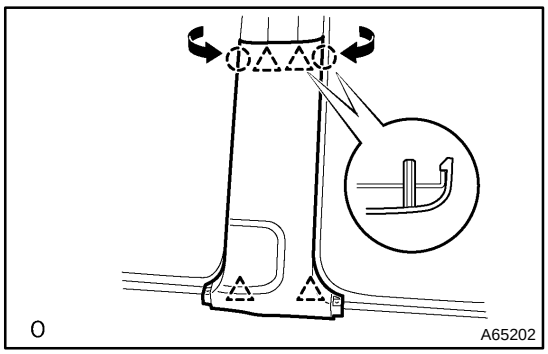

4. REMOVE CENTER PILLAR GARNISH LOWER RH (4WD DRIVE TYPE)

(a) Using a screwdriver, remove the center garnishlower RH.

HINT:

Tape the screwdriver tip before use.

5. REMOVE FRONT SEAT ASSY RH (4WD DRIVE TYPE)(See page 72–6)

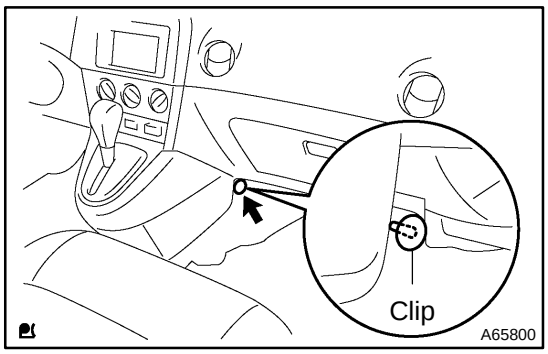

6. REMOVE OXYGEN SENSOR (2WD DRIVE TYPE)

(a) Remove a clip and tear off the floor mat.

(b) Disconnect a oxygen sensor connector.

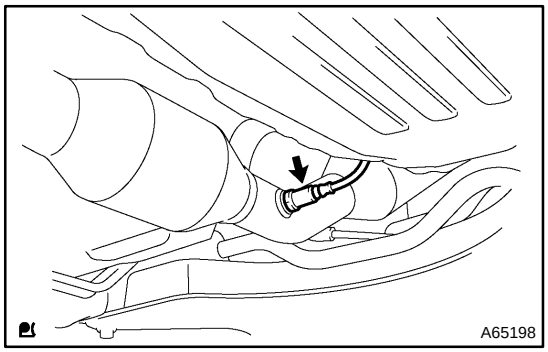

(c) Remove the oxygen sensor.

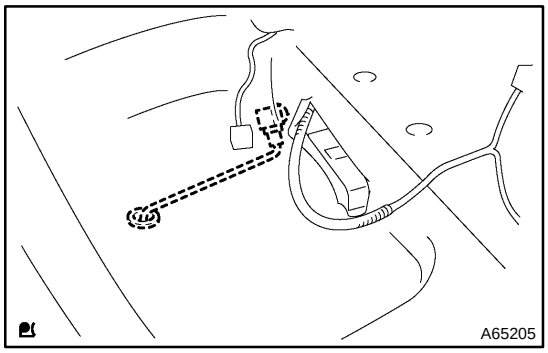

7. REMOVE OXYGEN SENSOR (4WD DRIVE TYPE)

(a) Remove the oxygen sensor connector as shown in the illustration.

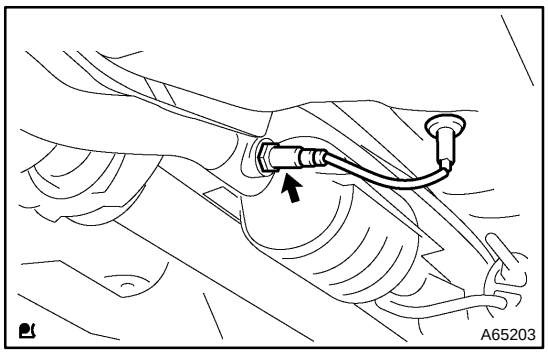

(b) Remove the oxygen sensor.

8. REMOVE TAIL PIPE ASSY (2WD DRIVE TYPE)

(a) Remove the tail pipe assy with 2 bolts and 2 springs.

9. REMOVE TAIL PIPE ASSY (4WD DRIVE TYPE)

(a) Remove a bolt and clamp.

(b) Remove the tail pipe and gasket.

10. REMOVE EXHAUST PIPE ASSY CENTER (4WD DRIVE TYPE)

(a) Remove the exhaust pipe assy center with 2 bolts and 2 springs.

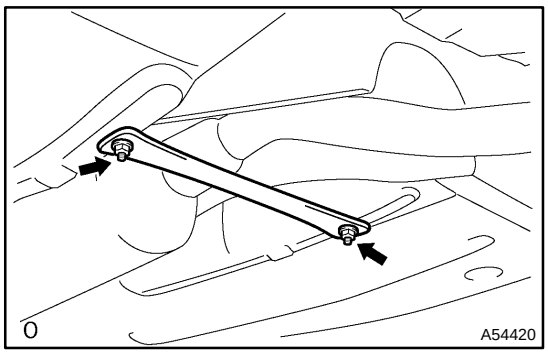

11. REMOVE FLOOR PANEL BRACE FRONT (2WD DRIVE TYPE)

(a) Remove 2 nuts and the front floor panel brace front.

12. REMOVE EXHAUST PIPE ASSY FRONT

(a) Remove the exhaust pipe front.

13. INSTALL EXHAUST PIPE ASSY FRONT

(a) Using a vernier calipers, measure the free length of the compression spring.
Free length: 43 mm (1.693 in.)

HINT:

If the free length is not as specified, replace the compression spring.

(b) Install a new gasket on the exhaust manifold.

(c) Install the exhaust pipe front with 2 bolts and 2 springs.
Torque: 43 N·m (440 kgf·cm, 32 ft·lbf)

14. INSTALL FLOOR PANEL BRACE FRONT (2WD DRIVE TYPE)

(a) Install the front panel brace front with 2 nuts.
Torque: 30 N·m (302 kgf·cm, 22 ft·lbf)

15. INSTALL EXHAUST PIPE ASSY CENTER (4WD DRIVE TYPE)

(a) Using a vernier calipers, measure the free length of the compression spring.
Free length: 40 mm (1.575 in.)

HINT:

If the free length is not as specified, replace the compression spring.

(b) Install a new gasket on the exhaust pipe assy front.

(c) Install the exhaust pipe assy center with 2 bolts and 2 springs.
Torque: 43 N·m (440 kgf·cm, 32 ft·lbf)

16. INSTALL TAIL PIPE ASSY (2WD DRIVE TYPE)

(a) Using a vernier calipers, measure the free length of the compression spring.
Free length: 40 mm (1.575 in.)

HINT:

If the free length is not as specified, replace the compression spring.

(1) Install a new gasket on the exhaust pipe front.

(2) Install the exhaust tail pipe with 2 bolts and 2 nuts.
Torque: 43 N·m (440 kgf·cm, 32 ft·lbf)

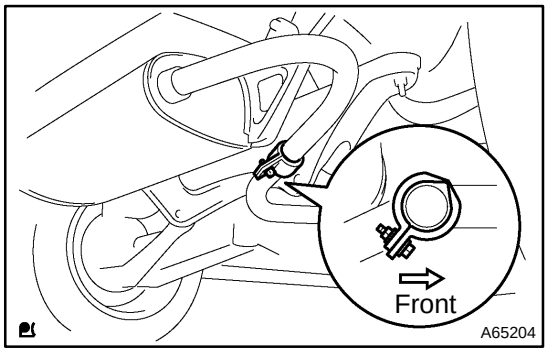

17. INSTALL TAIL PIPE ASSY (4WD DRIVE TYPE)

(a) Install the tail pipe assy with a bolt as shown in the illustration.
Torque: 32 N·m (330 kgf·cm, 24 ft·lbf)

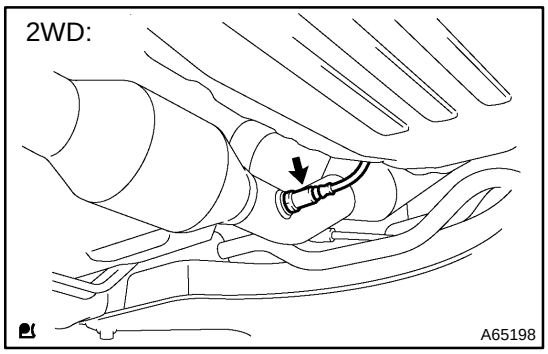

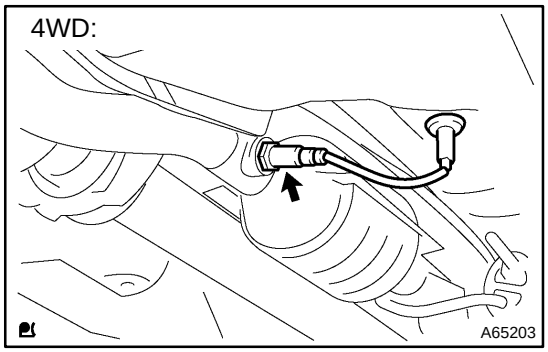

19. CHECK EXHAUST GAS LEAK

18. INSTALL OXYGEN SENSOR

(a) Install oxygen sensor to exhaust pipe front.
Torque: 44 N·m (450 kgf·cm, 33 ft·lbf)

(b) Connect the oxygen sensor connector.

HINT:

After installing oxygen sensor, check that sensor wire is not twisted. If it is twisted, remove the oxygen sensor and reinstall it.

EXHAUST PIPE (2ZZ–GE)

COMPONENTS

1504K–01

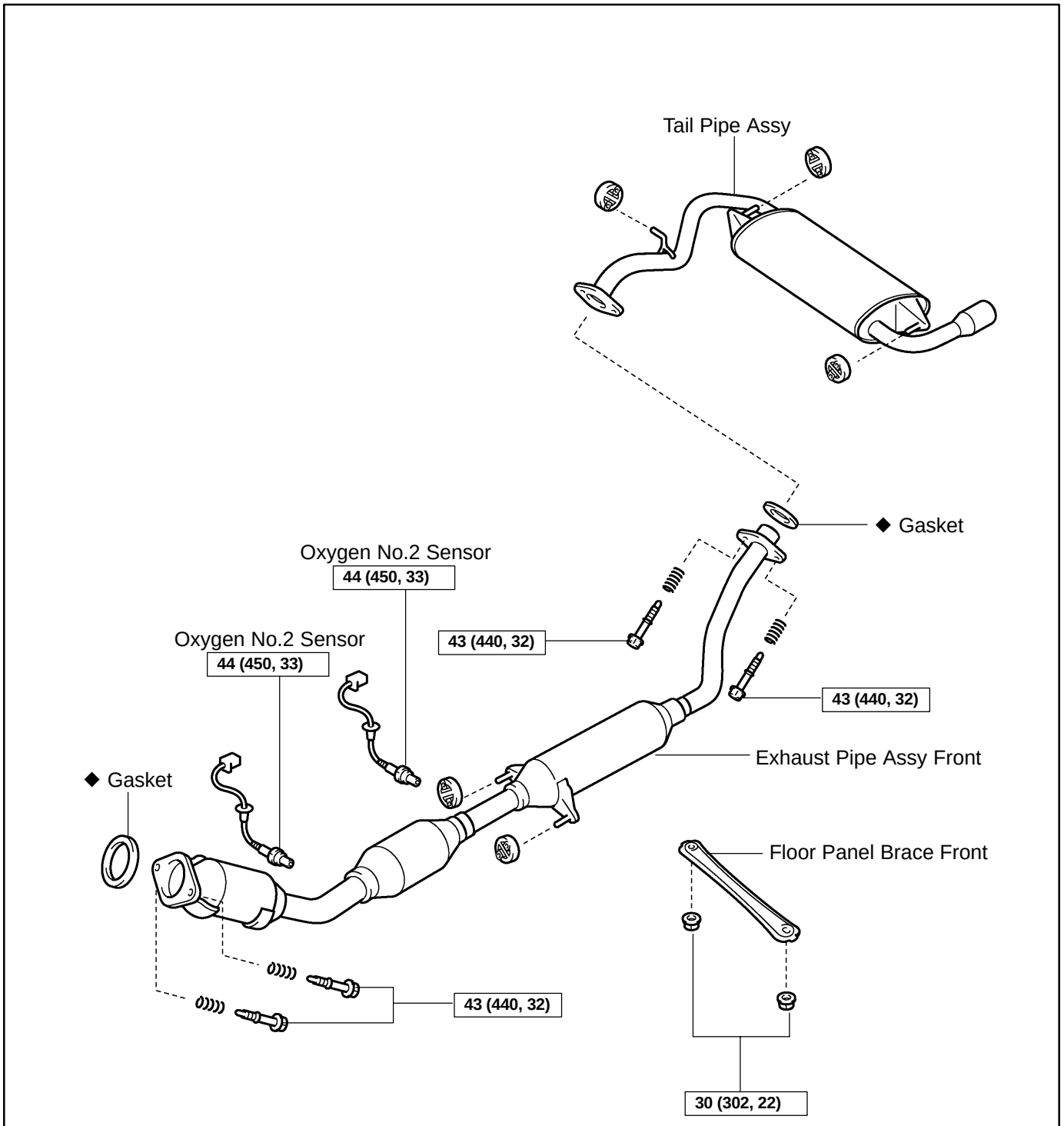

Removal & Installation and Disassembly & Reassembly

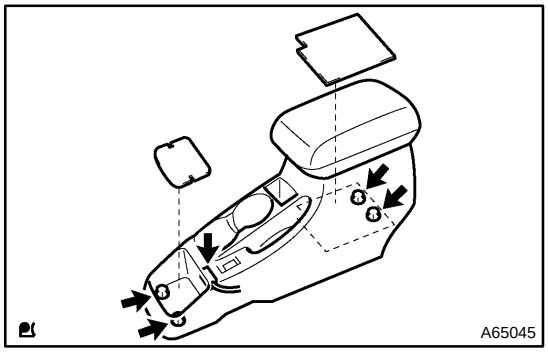

1. REMOVE CONSOLE BOX ASSY REAR

(a) Remove cosole box insert.
(b) Remove console box damper RR.
(c) Remove 4 bolts from the console box assy rear.
(d) Disconnect a connector and remove the console box assy rear.

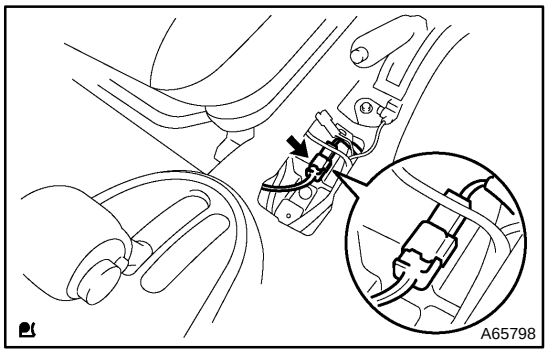

2. REMOVE OXYGEN NO.2 SENSOR (RR POSITION)

(a) Disconnect an oxygen No. 2 sensor connector, as show in the illustration.

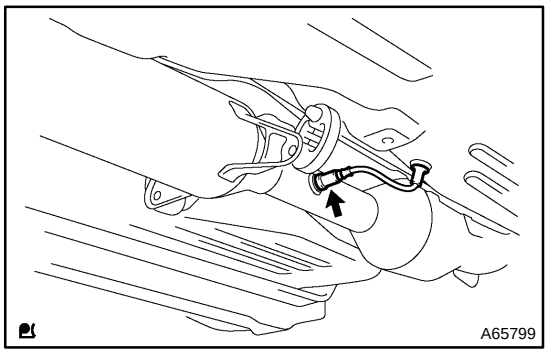

(b) Remove the oxygen No. 2 sensor from the exhaust pipe assy front, as shown in the illustration. 1504L–01

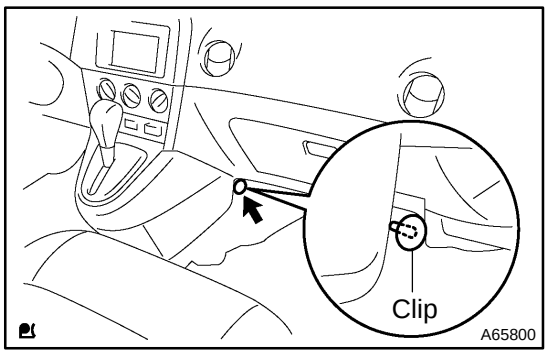

3. REMOVE OXYGEN NO.2 SENSOR (FR POSITION)

(a) Remove a clip and tear off the floor mat.
(b) Disconnect the oxygen No. 2 sensor connector.

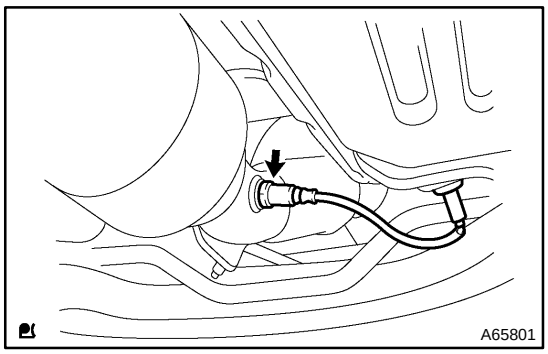

(c) Remove the oxygen No. 2 sensor from the exhaust pipe assy front, as shown in the illustration.

4. REMOVE TAIL PIPE ASSY

(a) Remove the exhaust tail pipe with 2 bolts and 2 springs.

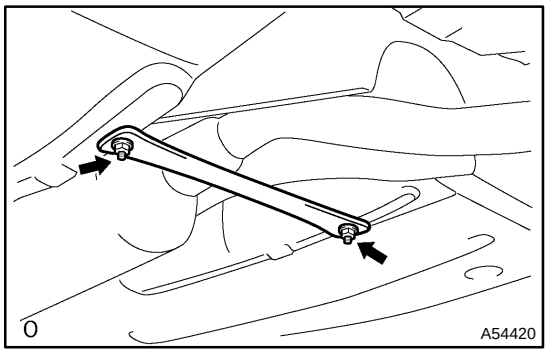

5. REMOVE FLOOR PANEL BRACE FRONT

(a) Remove 2 nuts and the front floor panel brace.

6. REMOVE EXHAUST PIPE ASSY FRONT

(a) Remove 2 bolts, 2 springs and exhaust front pipe.

7. INSTALL EXHAUST PIPE ASSY FRONT

(a) Using a vernier calipers, measure the free length of the compression spring.
Free length: 43 mm (1.693 in.)

HINT:

If the free length is not as specified, replace the compression spring.

(b) Install a new gasket on the exhaust manifold.

(c) Install the exhaust front pipe with 2 bolts and 2 springs.
Torque: 43 N·m (440 kgf·cm, 32 ft·lbf)

8. INSTALL FLOOR PANEL BRACE FRONT

(a) Install the front floor panel brace with 2 nuts.
Torque: 30 N·m (302 kgf·cm, 22 ft·lbf)

9. INSTALL TAIL PIPE ASSY

(a) Using a vernier calipers, measure the free length of the compression spring.
Free length: 40 mm (1.575 in.)

HINT:

If the free length is not as specified, replace the compression spring.

(b) Install a new gasket on the exhaust pipe front.

(c) Install the exhaust tail pipe with 2 bolts and 2 springs.
Torque: 43 N·m (440 kgf·cm, 32 ft·lbf)

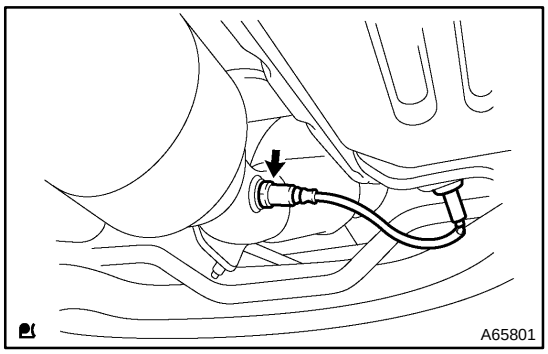

10. INSTALL OXYGEN NO.2 SENSOR (FR POSITION)

(a) Install the oxygen No. 2 sensor to the exhaust pipe front.
Torque: 44 N·m (450 kgf·cm, 33 ft·lbf)

(b) Connect the oxygen No. 2 sensor connector.

HINT:

After installing oxygen No. 2 sensor, check that sensor wire is not twisted. If it is twisted, remove oxygen No. 2 sensor and reinstall it.

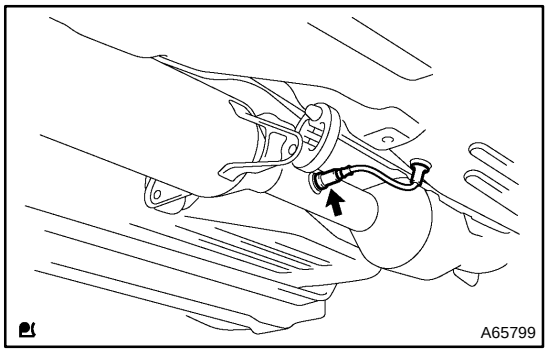

11. INSTALL OXYGEN NO.2 SENSOR (RR POSITION)

(a) Install the oxygen No. 2 sensor to the exhaust pipe front.
Torque: 44 N·m (450 kgf·cm, 33 ft·lbf)

(b) Connect the oxygen No. 2 sensor connector.

HINT:

After installing oxygen No. 2 sensor, check that sensor wire is not twisted. If it is twisted, remove oxygen No. 2 sensor and reinstall it.

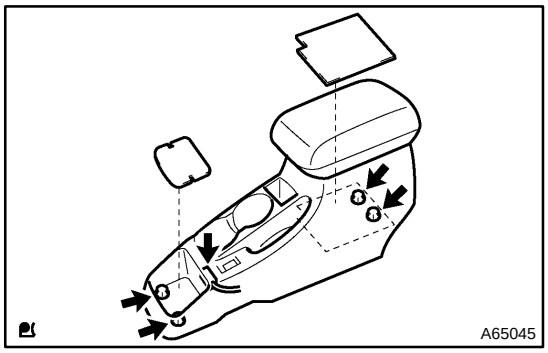

12. INSTALL CONSOLE BOX ASSY REAR

(a) Connect a connector and install the console box assy rear with 4 bolts.

13. CHECK EXHAUST GAS LEAK

INSPECTION

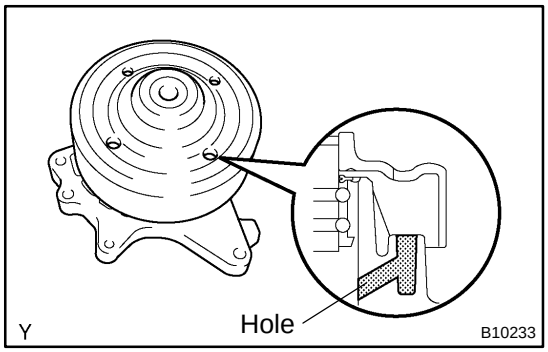

1. INSPECT WATER PUMP ASSY

(a) Visually check the drain hole for coolant leakage.

WATER PUMP ASSY (1ZZ–FE)

160C9–02

REPLACEMENT

1. REMOVE ENGINE UNDER COVER RH
2. DRAIN COOLANT (See page 16–6)

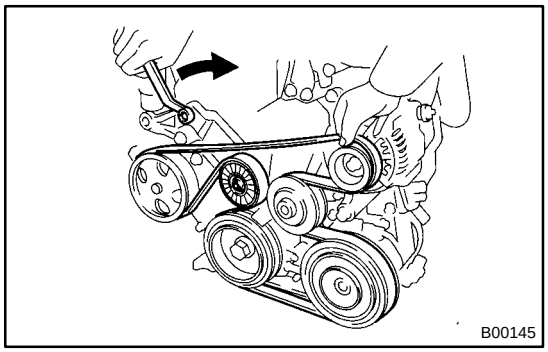

3. REMOVE FAN AND GENERATOR V BELT (See page 14–4)

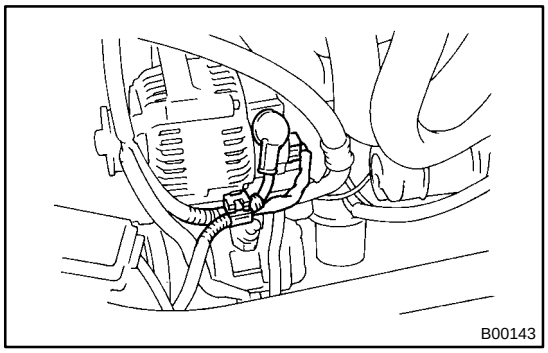

4. REMOVE GENERATOR ASSY

(a) Disconnect the wire clamp from the wire clip on the rectifire end frame.

(b) Remove the rubber cap and nut, and disconnect the alternator wire.

(c) Disconnect the alternator connector.

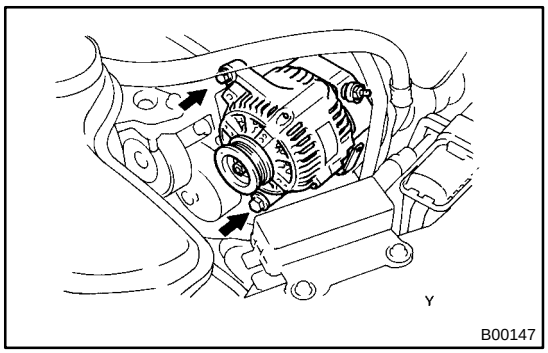

(d) Remove the 2 bolts and alternator.

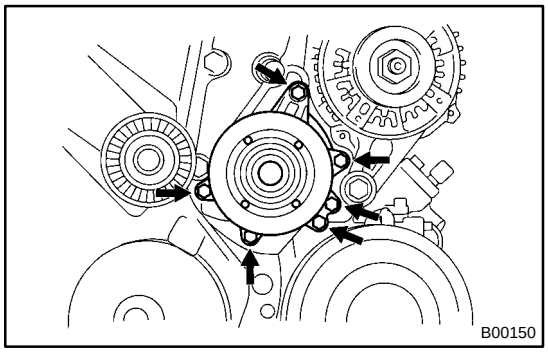

5. REMOVE WATER PUMP ASSY

(a) Remove the 6 bolts, water pump and O–ring.

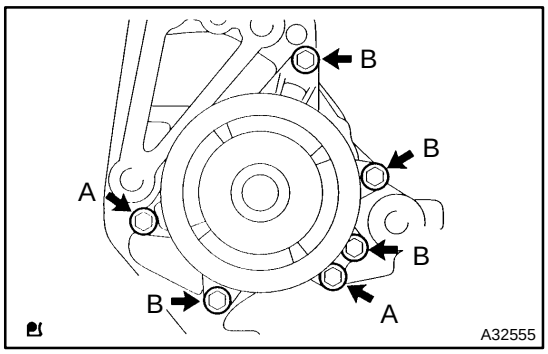

6. INSTALL WATER PUMP ASSY

(a) Place a new O–ring on the timing chain cover.

(b) Install the water pump with the 6 bolts.

Torque:

Bolt A 9.0 N·m (92 kgf·cm, 80 in·lbf)

Bolt B 11 N·m (113 kgf·cm, 8 ft·lbf)

7. INSTALL GENERATOR ASSY

Torque:

12 mm head 25 N·m (250 kgf·cm, 18 ft·lbf)

14 mm head 54 N·m (550 kgf·cm, 39 ft·lbf)

8. ADD COOLANT (See page 16–6)

9. CHECK ENGINE COOLANT LEAK (See page 16–6)

INSPECTION

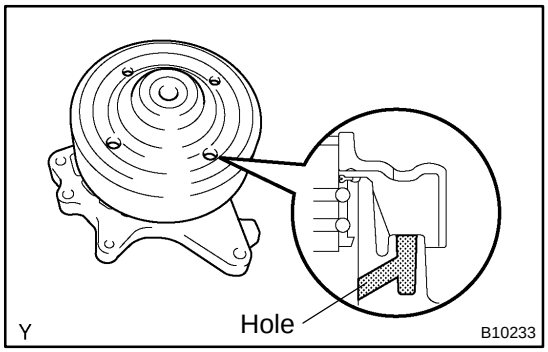

1. INSPECT WATER PUMP ASSY

(a) Visually check the drain hole for coolant leakage.

WATER PUMP ASSY (2ZZ–GE)

160CZ–01

REPLACEMENT

1. REMOVE ENGINE UNDER COVER RH
2. DRAIN COOLANT (See page 16–6)

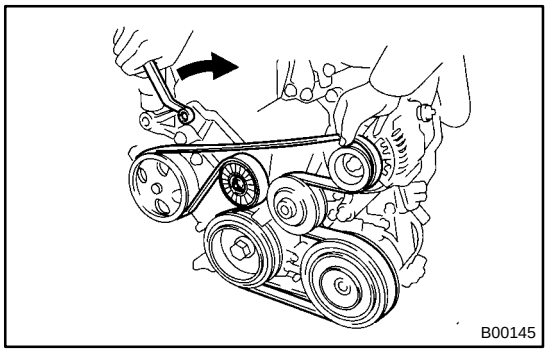

3. REMOVE FAN AND GENERATOR V BELT (See page 14–177)

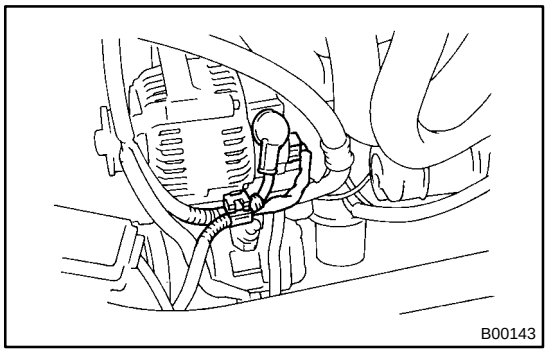

4. REMOVE GENERATOR ASSY

(a) Disconnect the wire clamp from the wire clip on the rectifire end frame.

(b) Remove the rubber cap and nut, and disconnect the alternator wire.

(c) Disconnect the alternator connector.

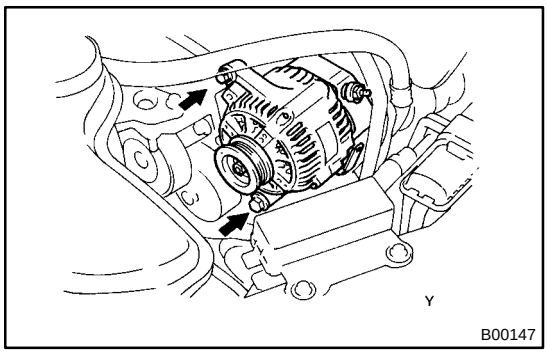

(d) Remove the 2 bolts and alternator.

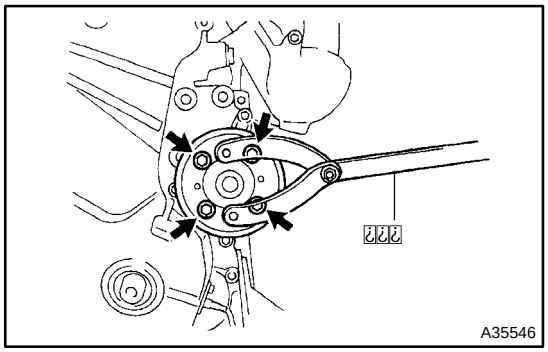

5. REMOVE WATER PUMP ASSY

(a) Using SST, remove 4 bolts and the water pump pulley.
SST 09960–10010 (09962–01000, 09963–00600)

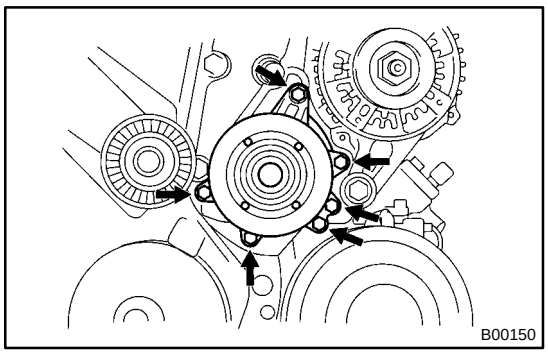

(b) Remove the 6 bolts, water pump and O–ring.

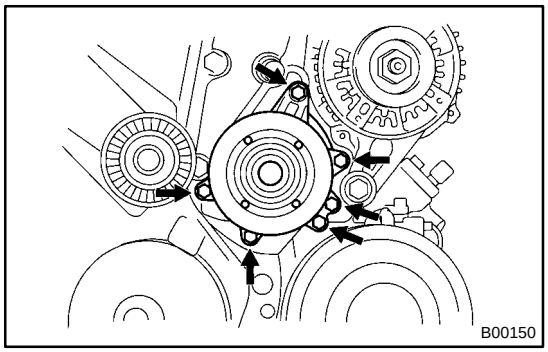

6. INSTALL WATER PUMP ASSY

(a) Place a new O–ring on the timing chain cover.

(b) Install the water pump with the 6 bolts.

Torque: 9.0 N·m (92 kgf·cm, 80 in·lbf)

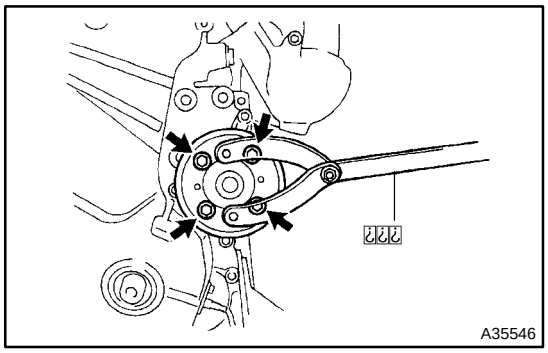

(c) Using SST, install the water pump pulley.

SST 09960–10010 (09962–01000, 09963–00600)

Torque: 15 N·m (153 kgf·cm, 11 ft·lbf)

7. INSTALL GENERATOR ASSY

Torque:

12 mm head 25 N·m (250 kgf·cm, 18 ft·lbf)

14 mm head 54 N·m (550 kgf·cm, 39 ft·lbf)

8. ADD COOLANT (See page 16–6)

9. CHECK ENGINE COOLANT LEAK (See page 16–6)

160C7–02

INSPECTION

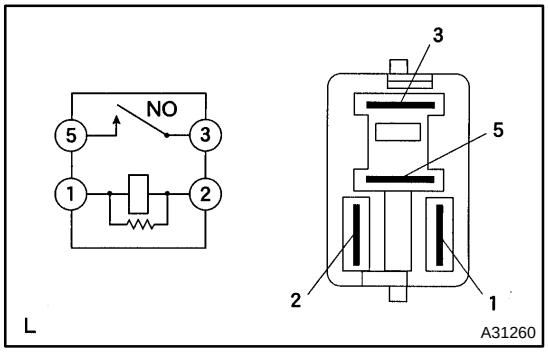

1. COOLING FAN RELAY

(a) Inspect the cooling fan relay continuity.

(1) Using an ohmmeter, check that there is continuity between terminals 1 and 2.

If there is no continuity, replace the relay.

(2) Check that there is no continuity between terminals 3 and 5.

If there is continuity, replace the relay.

(3) Apply battery voltage across terminals 1 and 2.

(4) Using an ohmmeter, check that there is continuity between terminals 3 and 5.

If there is no continuity, replace the relay.

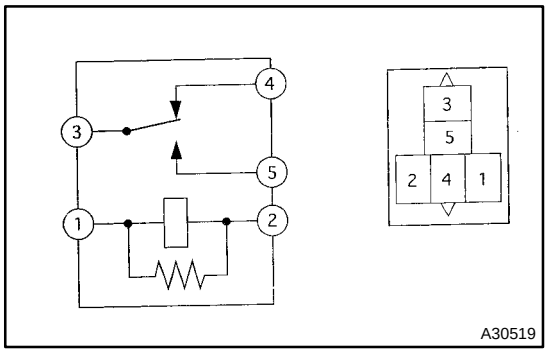

2. COOLING FAN RELAY NO.2

(a) Inspect the cooling fan relay continuity.

(1) Using an ohmmeter, check that there is continuity between terminals 1 and 2.

If there is no continuity, replace the relay.

(2) Using an ohmmeter, check that there is continuity between terminals 3 and 4.

If there is no continuity, replace the relay.

(3) Check that there is no continuity between terminals 3 and 5.

If there is continuity, replace the relay.

(4) Apply battery voltage across terminals 1 and 2.

(5) Using an ohmmeter, check that there is continuity between terminals 3 and 5.

If there is no continuity, replace the relay.

3. COOLING FAN RESISTOR

(a) Using an ohmmeter, measure the resistance between the terminals.

Resistance: 1.17 – 1.43 Ω at 20 °C (68 °F)

COOLING FAN SYSTEM

160C6–03

ON–VEHICLE INSPECTION

1. CHECK COOLING FAN OPERATION WITH LOW TEMPERATURE (Below 83°C (181°F))

(a) Turn the ignition switch ON.

(b) Check that the cooling fan stops.

HINT:

If not, check the cooling fan relay and water temperature sensor, and check for separated connector or severed wire between the cooling fan relay and water temperature sensor.

(c) Disconnect the water temperature sensor connector.

(d) Check that the cooling fan rotates.

If not, check the fuses, cooling fan relay, ECM and cooling fan, and check for a short circuit between the cooling fan relay and water temperature sensor.

(e) Reconnect the water temperature sensor connector.

2. CHECK COOLING FAN OPERATION WITH HIGH TEMPERATURE (Above 93°C (199°F))

(a) Start the engine, and raise coolant temperature to above 93°C (199°F).

HINT:

Coolant temperature is the detected value by the water temperature sensor on the water outlet.

(b) Check that the cooling fan rotates.

HINT:

If not, replace the water temperature sensor.

3. INSPECT COOLING FAN

(a) Disconnect the cooling fan connector.

(b) Connect battery and ammeter to the connector.

(c) Check that the cooling fan rotates smoothly, and check the reading on the ammeter.

Standard amperage:

Approx. 8.0 – 12.0 A at 20°C (68°F)

(d) Reconnect the cooling fan connector.

160C5–02

INSPECTION

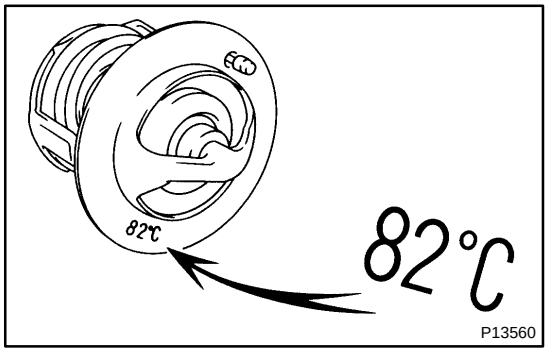

1. THERMOSTAT

HINT:

The thermostat is numbered with the valve opening temperature.

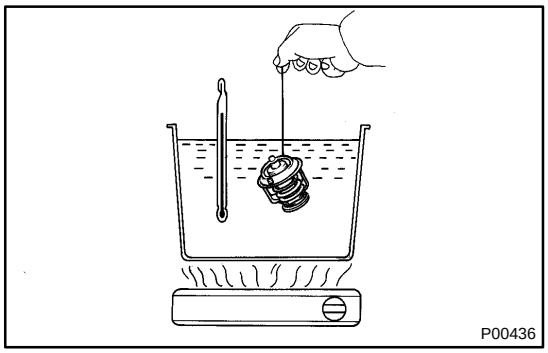

(a) Immerse the thermostat in water an gradually heat the water.

(b) Check the valve opening temperature.

Valve opening temperature:
80 – 84°C (176 – 183°F)

HINT:

If the valve opening temperature is not as specified, replace the thermostat.

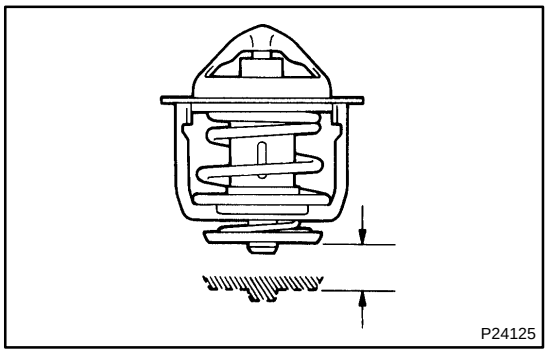

(c) Check the valve lift.

Valve lift: 10 mm (0.39 in.) or more at 95°C (203°F)

HINT:

If the valve lift is not as specified, replace the thermostat.

(d) Check that the valve is fully closed when the thermostat is at low temperatures (below 77°C (171°F)).

HINT:

If not closed, replace the thermostat.

2. RADIATOR CAP SUB–ASSY

NOTICE:

- **If the reservoir cap has contaminations, always rinse it with water.**
- **Before using a radiator cap tester, wet the relief valve and pressure valve with engine coolant or water.**
- **when performing step (a) and (b) below, keep the tester at an angle of over 30° above the horizontal.**

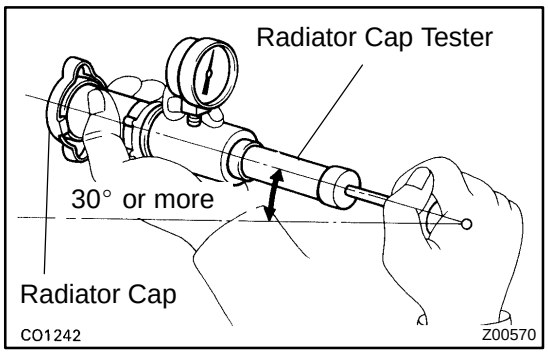

(a) Using a radiator cap tester, slowly pump the tester and check that air is coming from the vacuum valve.
Pump speed: 1 push / (3 seconds or more)

NOTICE:

Push the pump at a constant speed.

HINT:

- Pump speed: 1 push / (3 seconds or more)
- If air is not coming from the vacuum valve, replace the reservoir cap.

(b) Pump the tester and measure the relief valve opening pressure.
Standard opening pressure:
74 – 103 kPa (0.75 – 1.05 kgf/cm^2, 10.7 – 14.9 psi)
Minimum opening pressure:
59 kPa (0.6 kgf/cm^2, 8.5 psi)

NOTICE:

This pump speed is for the first pump only (in order to close the vacuum valve). After this, the pump speed can be reduced.

HINT:

- Pump speed: 1 push within 1 second
- Use the tester's maximum reading as the opening pressure.
- If the opening pressure is less than minimum, replace the reservoir cap.

COOLING SYSTEM

ON–VEHICLE INSPECTION

160C4–02

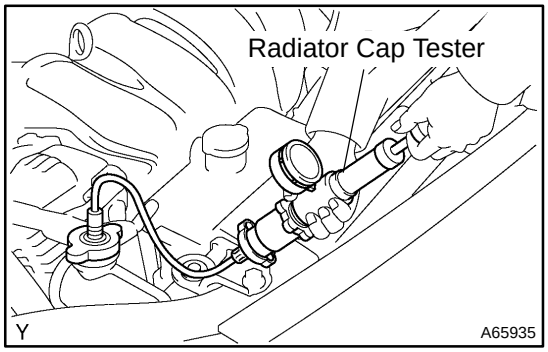

1. INSPECT COOLING SYSTEM FOR LEAKS

CAUTION:

To avoid the danger of being burned, do no remove the radiator cap while the engine and radiator are still hot, as fluid and steam can be blown out under pressure.

(a) Fill the radiator with coolant and attach a radiator cap tester.

(b) Warm up the engine.

(c) Pump it to 118 kPa (1.2 kgf/cm^2, 17.1 psi), and check that the pressure does not drop.

HINT:

If the pressure drops, check to hoses, radiator or water pump for leaks. If no external leaks are found, check the heater core, cylinder block and head.

2. CHECK ENGINE COOLANT LEVEL AT RESERVOIR

(a) The engine coolant level should be between the ”LOW” and ”FULL” line.

HINT:

If low, check for leaks and add ”Toyota Long Life Coolant” or equivalent up to the ”FULL” line.

3. CHECK ENGINE COOLANT QUALITY

(a) Remove the radiator cap.

CAUTION:

To avoid the danger of being burned, do not remove the radiator cap while the engine and radiator are still hot, as fluid and steam can be blown out under pressure.

(b) Check if there is any excessive deposits of rust or scale around the radiator cap and radiator filler hole; the coolant should be free from oil.

HINT:

If excessively dirty, replace the coolant.

(c) Reinstall the radiator cap.

COOLANT

REPLACEMENT

160C8–02

1. DRAIN COOLANT

CAUTION:

To avoid the danger of being burned, do not remove the radiator cap while the engine and radiator are still hot, as fluid and steam can be blown out under pressure.

(a) Remove the radiator cap.

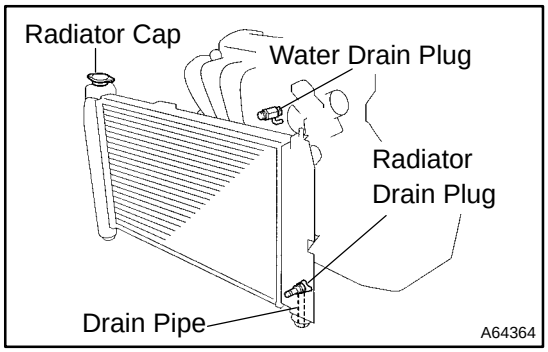

(b) Loosen the radiator and engine drain plugs, and drain the coolant.

(c) Close the drain plugs.

Torque: 13 N·m (130 kgf·cm, 9 ft·lbf) for engine

2. ADD COOLANT

(a) Slowly fill the system with coolant.

HINT:

- Use of improper coolants may damage engine cooling system.
- Use ”Toyota Long Life Coolant” or equivalent and mix it with plain water according to the manufacturer’s directions.
- Using of coolant with includes more than 50 % (freezing protection down to –35°C (–31°F) or 60 % (freezing protection down to –50°C (–58°F)) of ethylene–glycol is recommended but not more than 70 %.

NOTICE:

- **Do not use an alcohol type coolant or plain water alone.**
- **The coolant should be mixed with plain water (preferably demineralized water).**

  Capacity:

  1ZZ–FE: 6.5 liters (6.9 US qts, 5.7 lmp. qts)

  2ZZ–GE: 6.7 liters (7.1 US qts, 5.9 lmp. qts)

3. CHECK ENGINE COOLANT LEAK

(a) Fill the radiator with coolant and attach a radiator cap tester.

(b) Pump it to 118 kPa and check leakage.

RADIATOR ASSY

160CC–03

REPLACEMENT

1. DRAIN COOLANT (See page 16–6)
2. SEPARATE RADIATOR HOSE INLET
3. SEPARATE RADIATOR HOSE OUTLET
4. SEPARATE OIL COOLER INLET TUBE NO.1
5. SEPARATE OIL COOLER OUTLET TUBE NO.1
6. REMOVE RADIATOR ASSY
(a) Disconnect the fan motor connector.
(b) Disconnect two clamps for wire–harness from fan–shroud.
(c) Remove the two fan mount bolts.
(d) Remove the fan w/motor.
7. ADD COOLANT (See page 16–6)
8. CHECK ENGINE COOLANT LEAK (See page 16–6)

THERMOSTAT

160CB–02

REPLACEMENT

1. REMOVE ENGINE UNDER COVER RH
2. DRAIN COOLANT (See page 16–6)

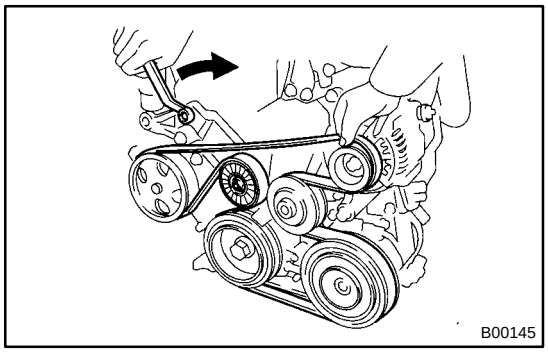

3. REMOVE FAN AND GENERATOR V BELT

HINT:

- 1ZZ–FE See Page 14–4
- 2ZZ–GE See Page 14–177

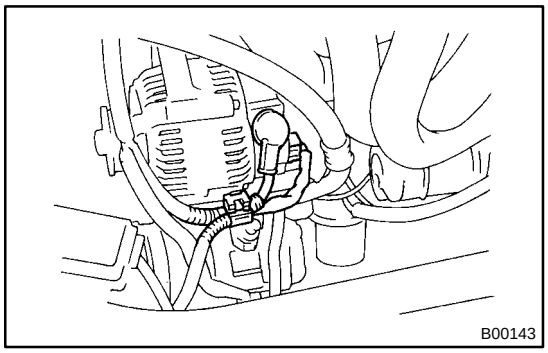

4. REMOVE GENERATOR ASSY

(a) Disconnect the wire clamp from the wire clip on the rectifire end frame.

(b) Remove the rubber cap and nut, and disconnect the alternator wire.

(c) Disconnect the alternator connector.

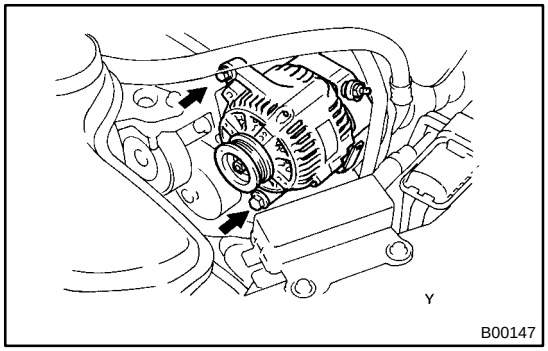

(d) Remove the 2 bolts and alternator.

5. REMOVE WATER INLET
6. REMOVE THERMOSTAT

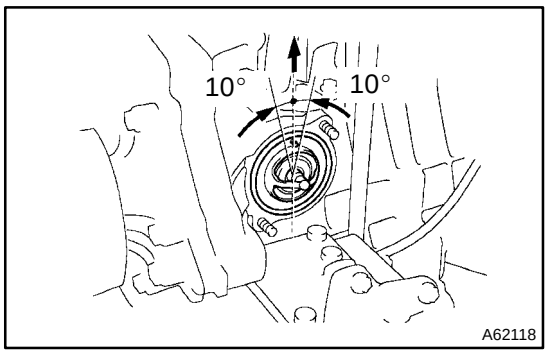

7. INSTALL THERMOSTAT

(a) Install a new gasket to the thermostat.

(b) Install the thermostat with the jiggle valve upward as shown in the illustration.

8. INSTALL WATER INLET
Torque: 11 N·m (113 kgf·cm, 8 ft·lbf)

9. INSTALL GENERATOR ASSY
Torque:
12mm head 25 N·m (250 kgf·cm, 18 ft·lbf)
14mm head 54 N·m (550 kgf·cm, 39 in.·lbf)

10. ADD COOLANT (See page 16–6)

11. CHECK ENGINE COOLANT LEAK (See page 16–6)

LUBRICATION SYSTEM (1ZZ–FE)

1707P–01

ON–VEHICLE INSPECTION

1. CHECK ENGINE OIL LEVEL

(a) After warming up the engine and then 5 minutes after the engine stop, oil level should be between the ”L” and ”F” marks on the dipstick. If low, check for leakage and add oil up to the ”F” mark.

NOTICE:

Do not fill with engine oil above the ”F” mark.

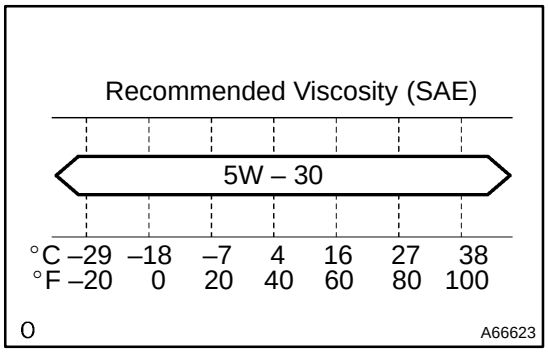

2. CHECK ENGINE OIL QUALITY

(a) Check the oil for deterioration, entry of water, discoloring or thinning.

(b) If the quality is visibly poor, replace the oil.

Oil grade:

API grade ”SL” Energy–Conserving or ILSAC multi-grade engine oil. Recommended viscosity is as shown in the illustration.

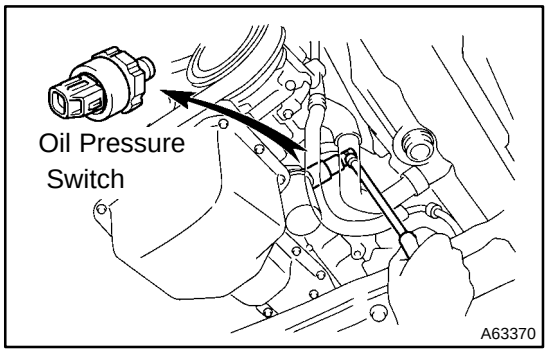

3. REMOVE OIL PRESSURE SWITCH ASSY

(a) Disconnect the oil pressure switch connector and remove the oil pressure switch.

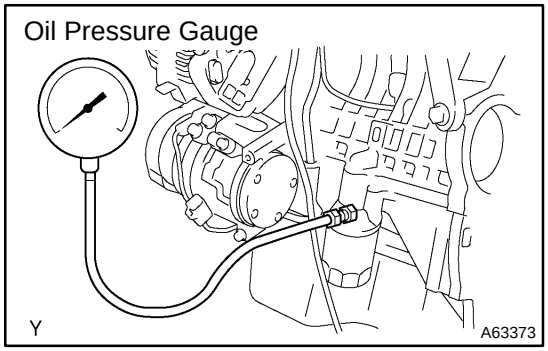

4. INSTALL OIL PRESSURE GAUGE

(a) Install the oil pressure gauge.

5. WARM UP ENGINE

6. CHECK OIL PRESSURE

Oil pressure:

At idle : 29 kPa (0.4 kgf·cm^2, 5.7 psi) or more

At 3000 r/min: 294 – 539 kPa (3.0 – 5.5 kgf·cm^2, 43 – 78 psi) or more

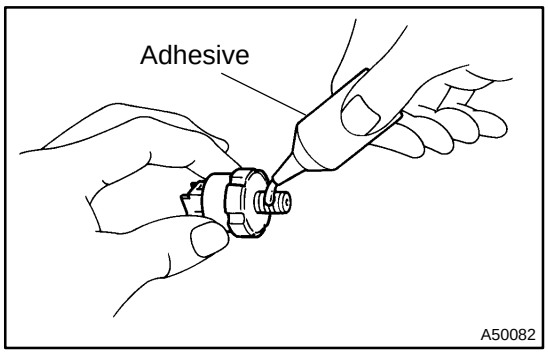

7. INSTALL OIL PRESSURE SWITCH

(a) Apply adhesive to 2 or 3 threads of the oil pressure switch.
Adhesive:
Part No. 08833–00080, THREE BOND 1344, LOCTITE 242 or equivalent

(b) Install the oil pressure switch.
Torque: 13 N·m (130 kgf·cm, 9.0 ft·lbf)

(c) Connect the oil pressure switch connector.

8. START ENGINE AND CHECK FOR LEAKS

OIL PUMP ASSY (1ZZ–FE)

COMPONENTS

1707Q–01

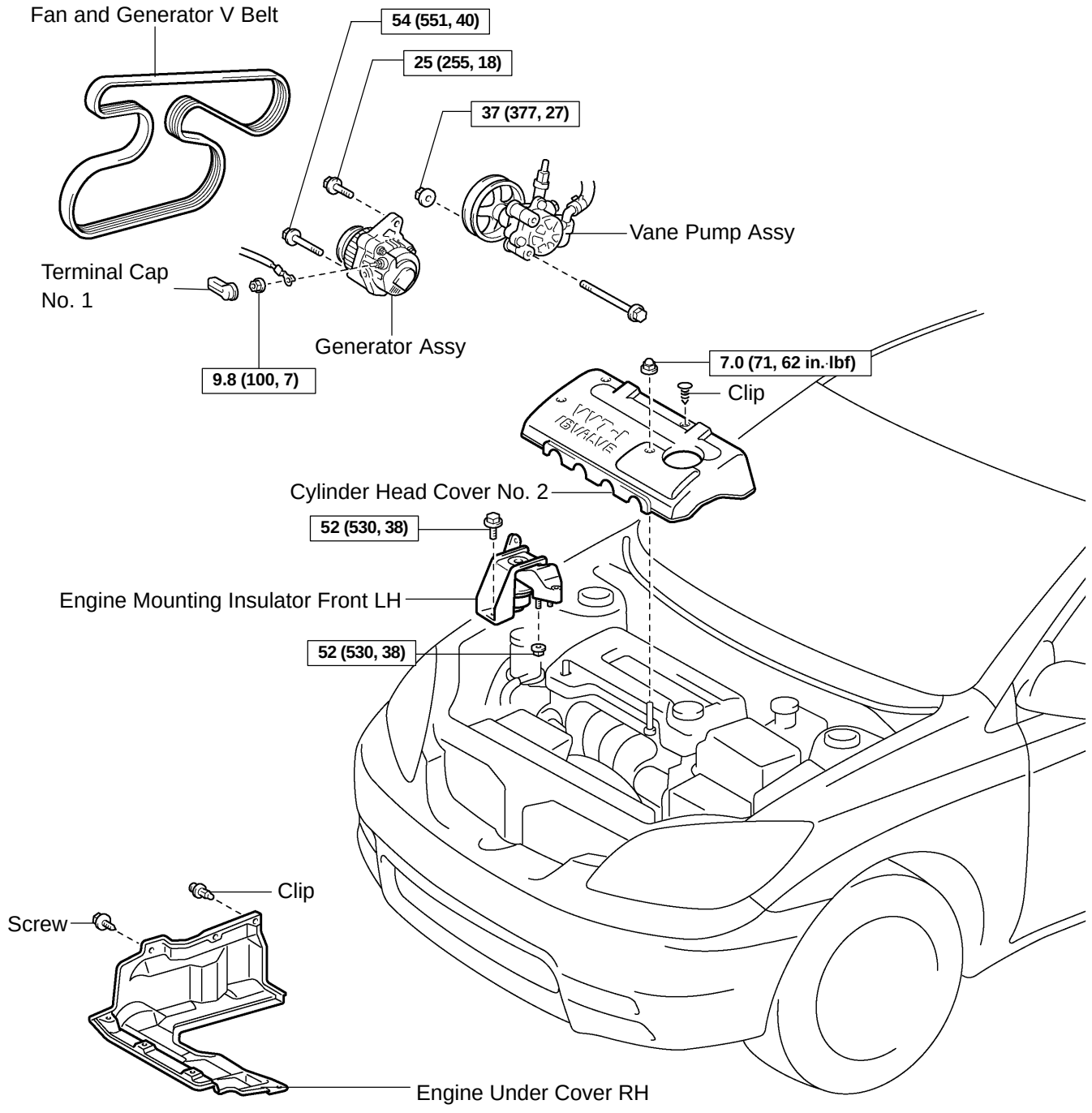

o N·m (kgf·cm, ft·lbf) : Specified torque

A64051

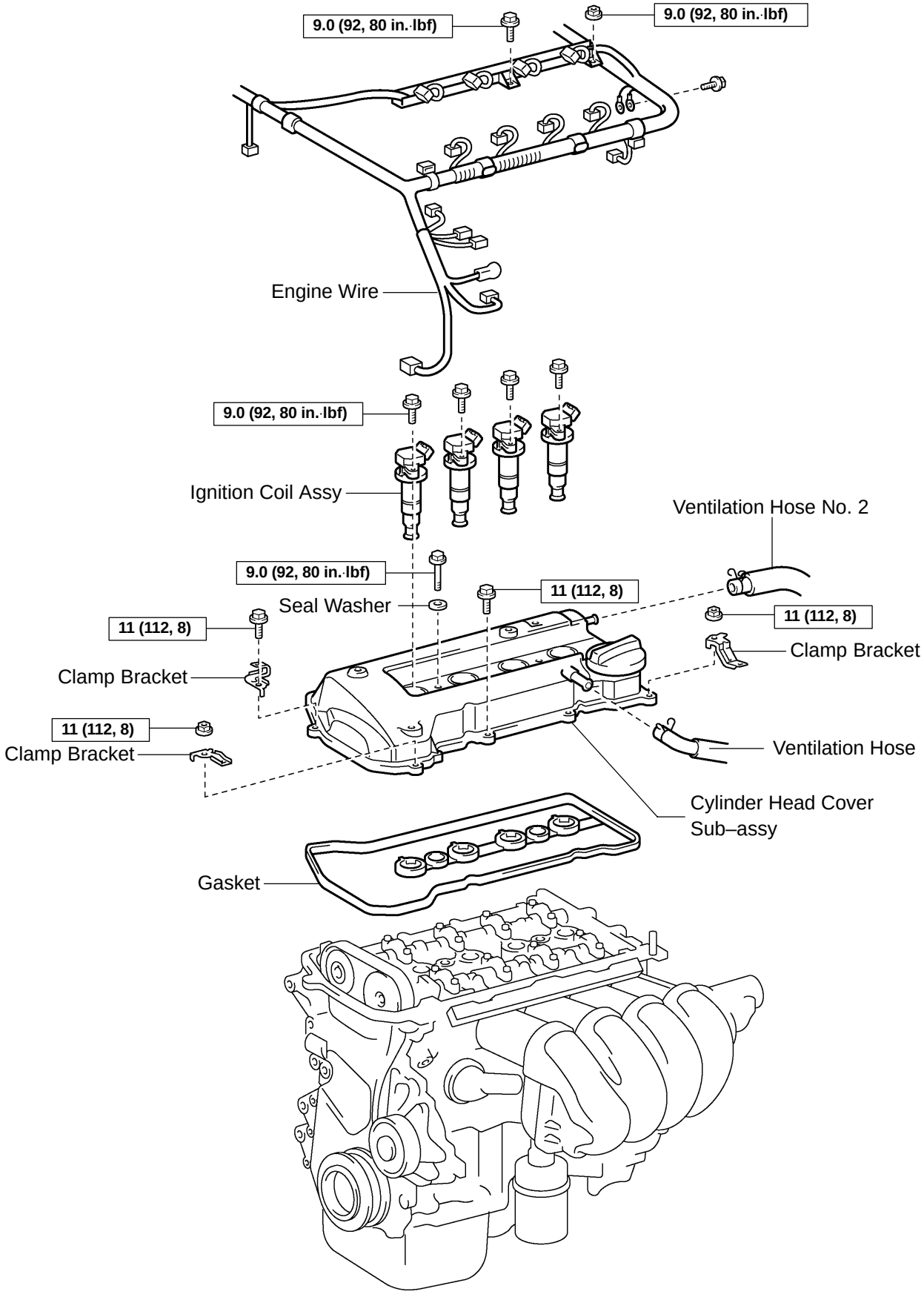

○ N·m (kgf·cm, ft·lbf) : Specified torque

A64043

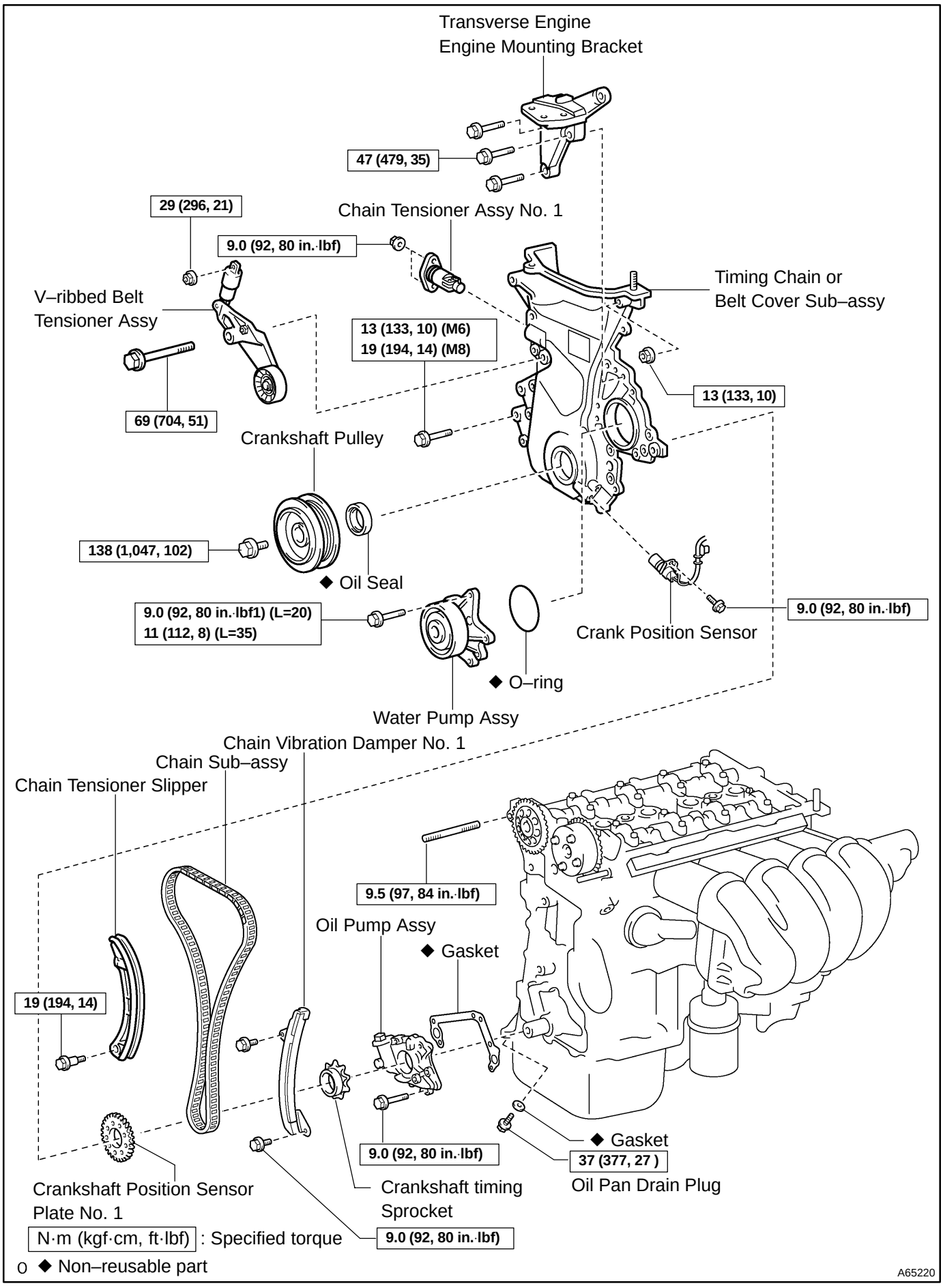
Transverse Engine
Engine Mounting Bracket
47 (479, 35)
29 (296, 21)
Chain Tensioner Assy No. 1
9.0 (92, 80 in.·lbf)
V–ribbed Belt
Tensioner Assy
Timing Chain or
Belt Cover Sub–assy
13 (133, 10) (M6)
19 (194, 14) (M8)
13 (133, 10)
69 (704, 51)
Crankshaft Pulley
138 (1,047, 102)
◆ Oil Seal
9.0 (92, 80 in.·lbf1) (L=20)
11 (112, 8) (L=35)
9.0 (92, 80 in.·lbf)
Crank Position Sensor
◆ O–ring
Water Pump Assy
Chain Vibration Damper No. 1
Chain Sub–assy
Chain Tensioner Slipper
9.5 (97, 84 in.·lbf)
Oil Pump Assy
◆ Gasket
19 (194, 14)
◆ Gasket
9.0 (92, 80 in.·lbf)
37 (377, 27)
Oil Pan Drain Plug
Crankshaft Position Sensor
Plate No. 1
Crankshaft timing
Sprocket
N·m (kgf·cm, ft·lbf) : Specified torque
9.0 (92, 80 in.·lbf)
◆ Non–reusable part
A65220

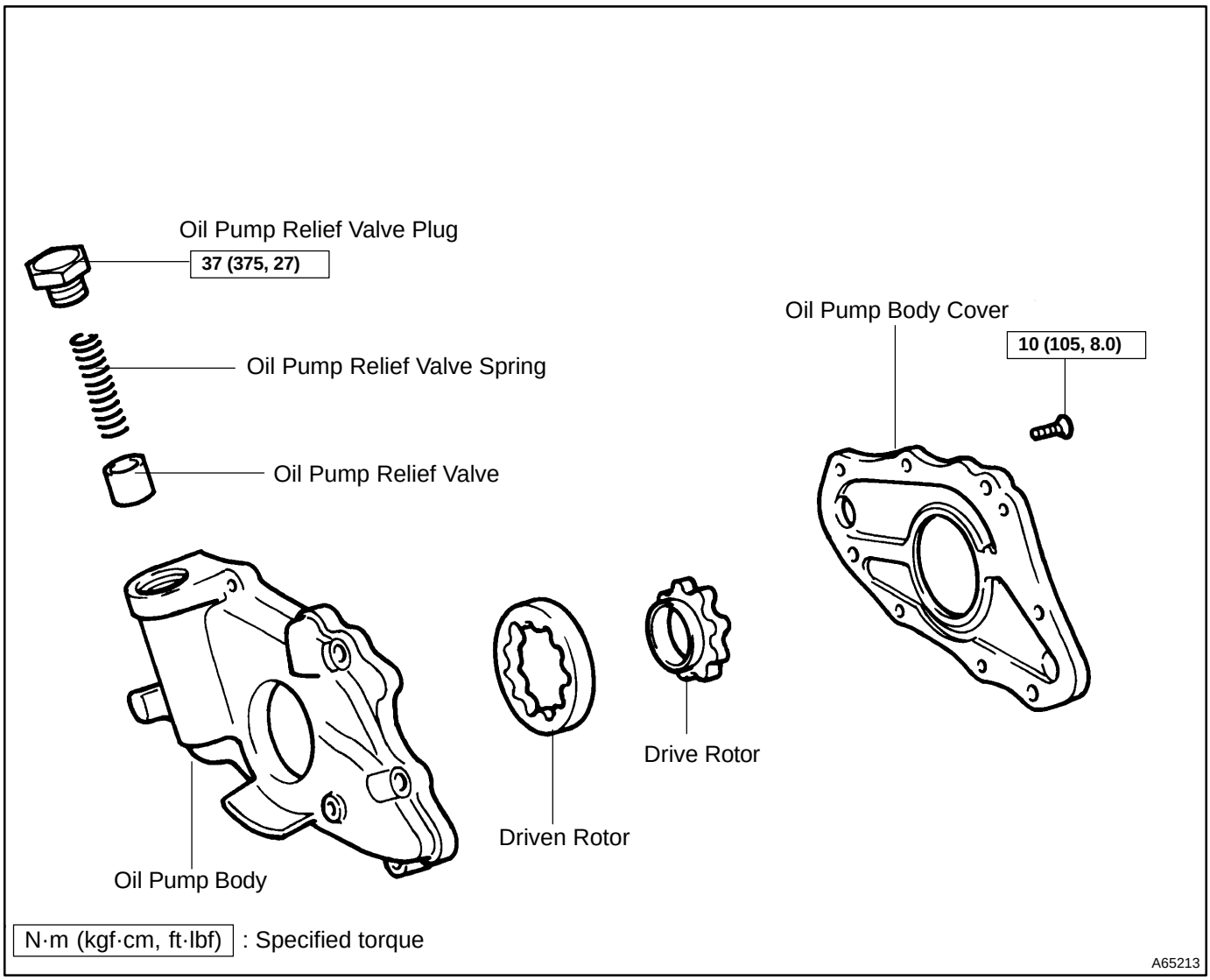
Oil Pump Relief Valve Plug
37 (375, 27)
Oil Pump Relief Valve Spring
Oil Pump Relief Valve
Oil Pump Body Cover
10 (105, 8.0)
Drive Rotor
Driven Rotor
Oil Pump Body
N·m (kgf·cm, ft·lbf) : Specified torque
A65213

1707S–01

OVERHAUL

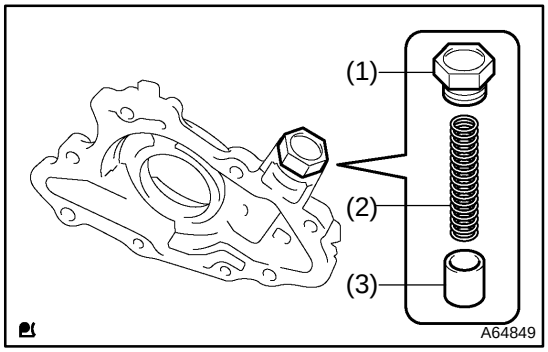

1. REMOVE OIL PUMP RELIEF VALVE

(a) Remove the oil pump relief valve plug, oil pump relief valve spring and oil pump relief valve.
- (1) Oil pump relief valve plug
- (2) Oil pump relief valve spring
- (3) Oil pump relief valve

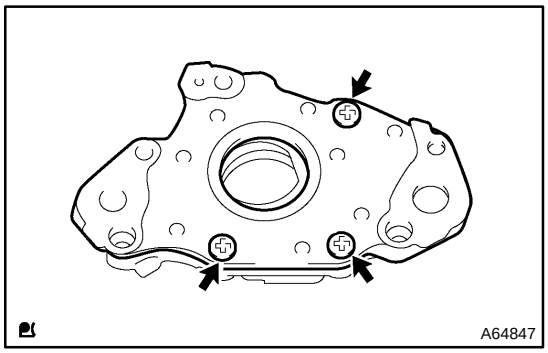

2. INSPECT OIL PUMP ASSY

(a) Remove 3 screws and oil pump cover.

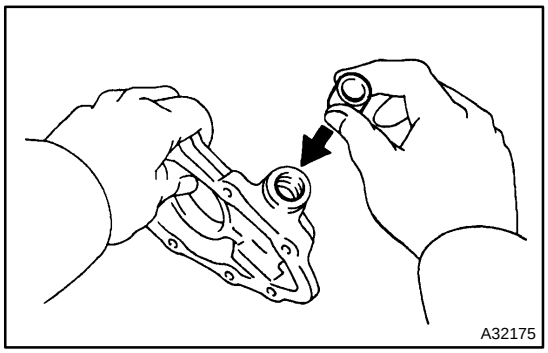

(b) Inspect the oil pump relief valve.
- (1) Coat the valve with engine oil and check that it falls smoothly into the valve hole by it own weight.

(c) Inspect the oil pump rotor sub–assembly.
- (1) Coat the oil pump gear set with engine oil and place them into the oil pump body. Check that the rotors revolves smoothly.

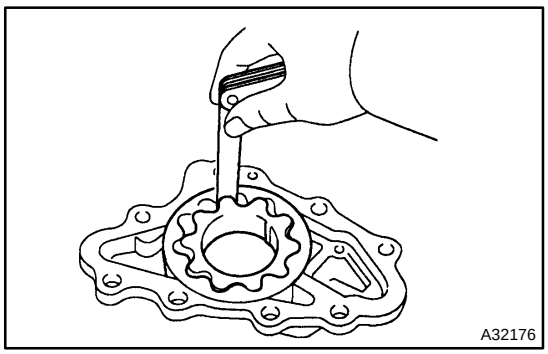

(d) Inspect rotor tip clearance.
- (1) Using a feeler gauge, measure the clearance between the drive and driven rotor tips.

Standard tip clearance:
0.040 – 0.160 mm (0.0016 – 0.0063 in.)

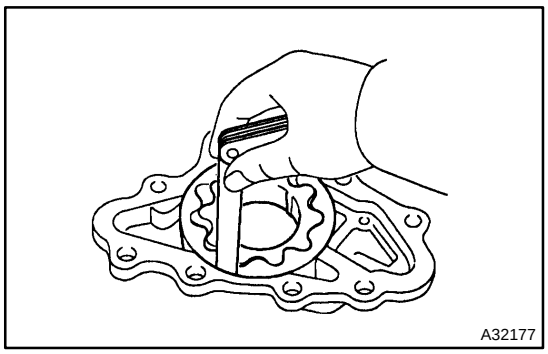

(e) Inspect body clearance.
(1) Using a feeler gauge, measure the clearance between the driven rotor and body.
Standard body clearance:
0.260 – 0.325 mm (0.0102 – 0.0128 in.)

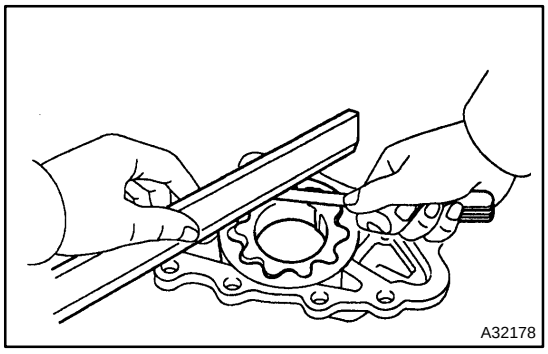

(f) Inspect rotor side clearance.
(1) Using a feeler gauge and precision straight edge, measure the clearance between the rotors and precision straight edge.
Standard side clearance:
0.025 – 0.071 mm (0.0010 – 0.0028 in.)

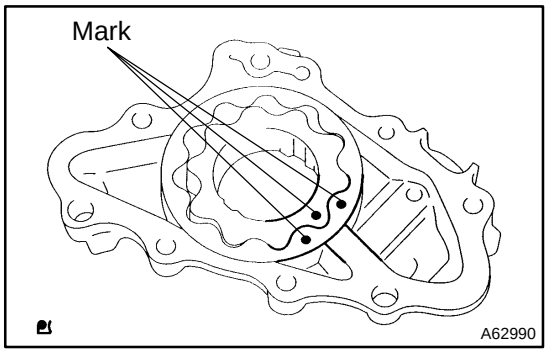

(g) Install oil pump rotor sub–assembly.
(1) Coat the oil pump gear set with engine oil and place it into pump body with the marks facing the pump body cover side.

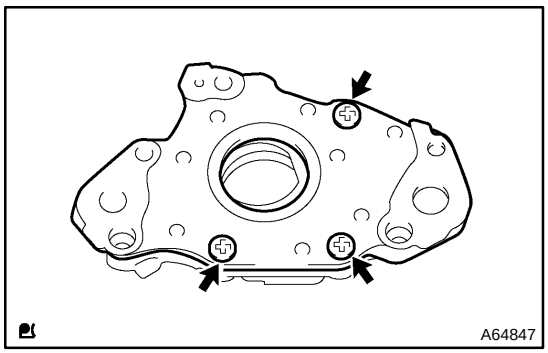

(h) Install the oil pump cover with 3 screws.
Torque: 10 N·m (105 kgf·cm, 8.0 ft·lbf)

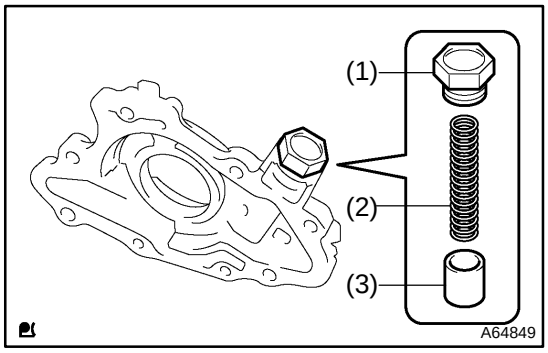

3. INSTALL OIL PUMP RELIEF VALVE

(a) Install the oil pump relief valve plug, oil pump relief valve spring and oil pump relief valve.
Torque: 37 N·m (375 kgf·cm, 27 ft·lbf)
(1) Oil pump relief valve plug
(2) Oil pump relief valve spring
(3) Oil pump relief valve

REPLACEMENT

1. DRAIN ENGINE OIL

(a) Remove the oil pan drain plug and drain the engine oil.

2. REMOVAL & INSTALLATION CHAIN SUB–ASSY (See page 14–86)

3. REMOVE CHAIN VIBRATION DAMPER NO.1

(a) Remove 2 bolts and chain vibration damper No. 1.

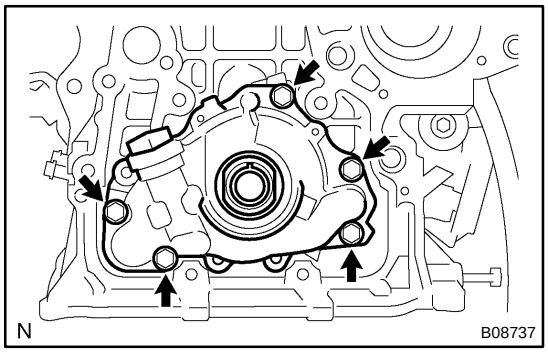

4. REMOVE OIL PUMP ASSY

(a) Remove the 5 bolts.

(b) Remove the oil pump assy and gasket.

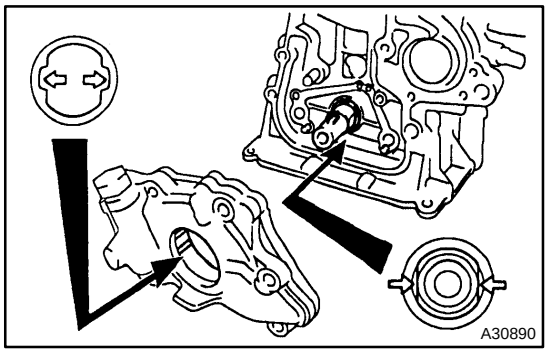

5. INSTALL OIL PUMP ASSY

(a) Place a new gasket on the cylinder block.

(b) Engage the spline teeth of the oil pump drive rotor with the large teeth of the crankshaft, and side the oil pump.

(c) Install the oil pump with the 5 bolts.
Torque: 9.0 N·m (92 kgf·cm, 80 in.·lbf)

6. INSTALL CHAIN VIBRATION DAMPER NO.1

(a) Install the chain vibration damper No. 1 with 2 bolts.
Torque: 9.0 N·m (92 kgf·cm, 80 in.·lbf)

7. INSTALL OIL PAN DRAIN PLUG

(a) Clean and install the oil pan drain plug with a new gasket.
Torque: 37 N·m (377 kgf·cm, 27 ft·lbf)

8. ADD ENGINE OIL
Capacity:
Drain and refill w/ Oil filter change 3.7 liters (3.9 US qts, 3.3 lmp. qts)
Drain and refill w/o Oil filter change 3.5 liters (3.7 US qts, 3.1 lmp. qts)
Dry fill 4.2 liters (4.4 US qts, 3.7 lmp. qts)

9. ADD COOLANT(See page 16–6)

10. INSPECT OIL LEAK

11. INSPECT CHECK ENGINE COOLANT LEAK (See page 16–1)

OIL FILTER SUB–ASSY (1ZZ–FE)

1707T–01

REPLACEMENT

CAUTION:

- **Prolonged and repeated contact with mineral oil will result in the removal of natural fats from the skin, leading to dryness, irritation and dermatitis. In addition, used engine oil contains potentially harmful contaminants which may cause skin cancer.**
- **Exercise caution in order to minimize the length and frequency of contact of your skin to used oil. Wear protective clothing and gloves. Wash your skin thoroughly with soap and water, or use water–less hand cleaner to remove any used engine oil. Do not use gasoline, thinners, or solvents.**
- **In order to preserve the environment, used oil and used oil filter must be disposed of only at designated disposal sites.**

1. REMOVE ENGINE UNDER COVER RH

2. DRAIN ENGINE OIL

(a) Remove the oil pan drain plug and drain the engine oil.

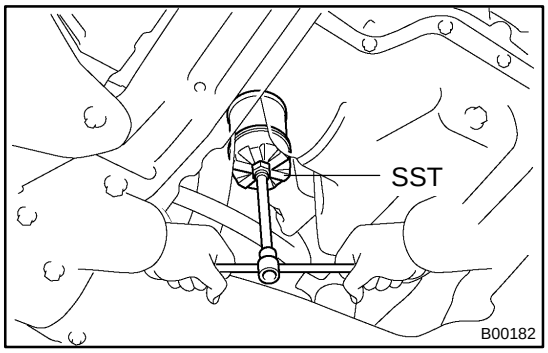

3. REMOVE OIL FILTER SUB–ASSY

(a) Using SST, remove the oil filter
SST 09228–06501

4. INSTALL OIL FILTER SUB–ASSY

(a) Check and clean the oil filter installation surface.

(b) Apply clean engine oil to the gasket of a new oil filter.

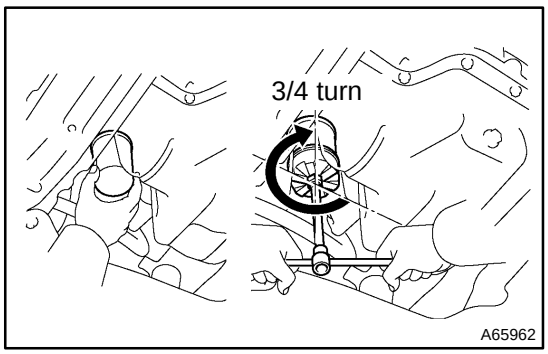

(c) Lightly screw the oil filter into place, and tighten it until the gasket contacts the seat.

(d) Using SST, tighten it an additional 3/4 turn.
SST 09228–06501

5. INSTALL OIL PAN DRAIN PLUG

(a) Clean and install the oil pan drain plug with a new gasket.
Torque: 37 N·m (377 kgf·cm, 27 ft·lbf)

6. ADD ENGINE OIL

Capacity:

Drain and refill w/ Oil filter change 3.7 liters (3.9 US qts, 3.3 lmp. qts)

Drain and refill w/o Oil filter change 3.5 liters (3.7 US qts, 3.1 lmp. qts)

Dry fill 4.2 liters (4.4 US qts, 3.7 lmp. qts)

7. INSPECT OIL LEAK

LUBRICATION SYSTEM (2ZZ–GE)

1707U–01

ON–VEHICLE INSPECTION

1. CHECK ENGINE OIL LEVEL

(a) After warming up the engine and then 5 minutes after the engine stop, oil level should be between the ”L” and ”F” marks on the dipstick. If low, check for leakage and add oil up to the ”F” mark.

NOTICE:

Do not fill with engine oil above the ”F” mark.

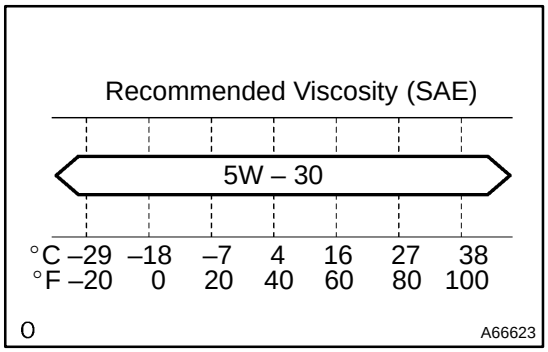

2. CHECK ENGINE OIL QUALITY

(a) Check the oil for deterioration, entry of water, discoloring or thinning.

(b) If the quality is visibly poor, replace the oil.

Oil grade:

API grade ”SL” Energy–Conserving or ILSAC multi-grade engine oil. Recommended viscosity is as shown in the illustration.

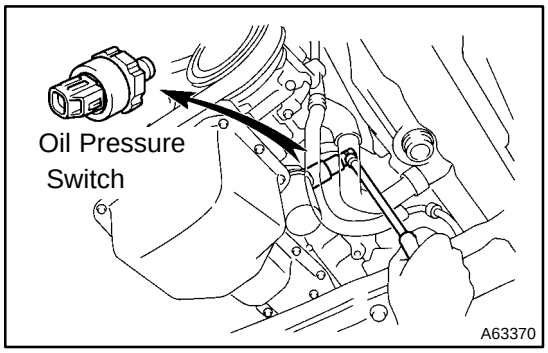

3. REMOVE OIL PRESSURE SWITCH ASSY

(a) Disconnect the oil pressure switch connector and remove the oil pressure switch.

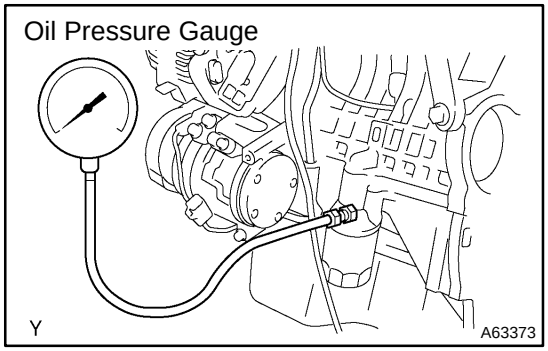

4. INSTALL OIL PRESSURE GAUGE

(a) Install the oil pressure gauge.

5. WARM UP ENGINE

6. CHECK OIL PRESSURE

Oil pressure:

At idle: 19.2 kPa (0.4 kgf·cm2, 5.7 psi) or more

At 3000 r/min: 294 – 539 kPa (3.0 – 5.5 kgf·cm2, 43 – 78 psi) or more

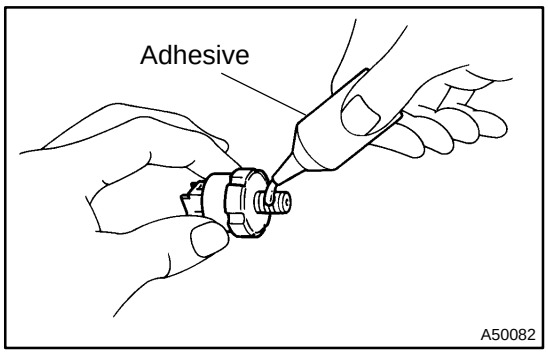

7. INSTALL OIL PRESSURE SWITCH

(a) Apply adhesive to 2 or 3 threads of the oil pressure switch.
Adhesive:
Part No. 08833–00080, THREE BOND 1344, LOCTITE 242 or equivalent

(b) Install the oil pressure switch.
Torque: 13 N·m (130 kgf·cm, 9.0 ft·lbf)

(c) Connect the oil pressure switch connector.

8. START ENGINE AND CHECK FOR LEAKS

OIL PUMP ASSY (2ZZ–GE)

17080–01

COMPONENTS

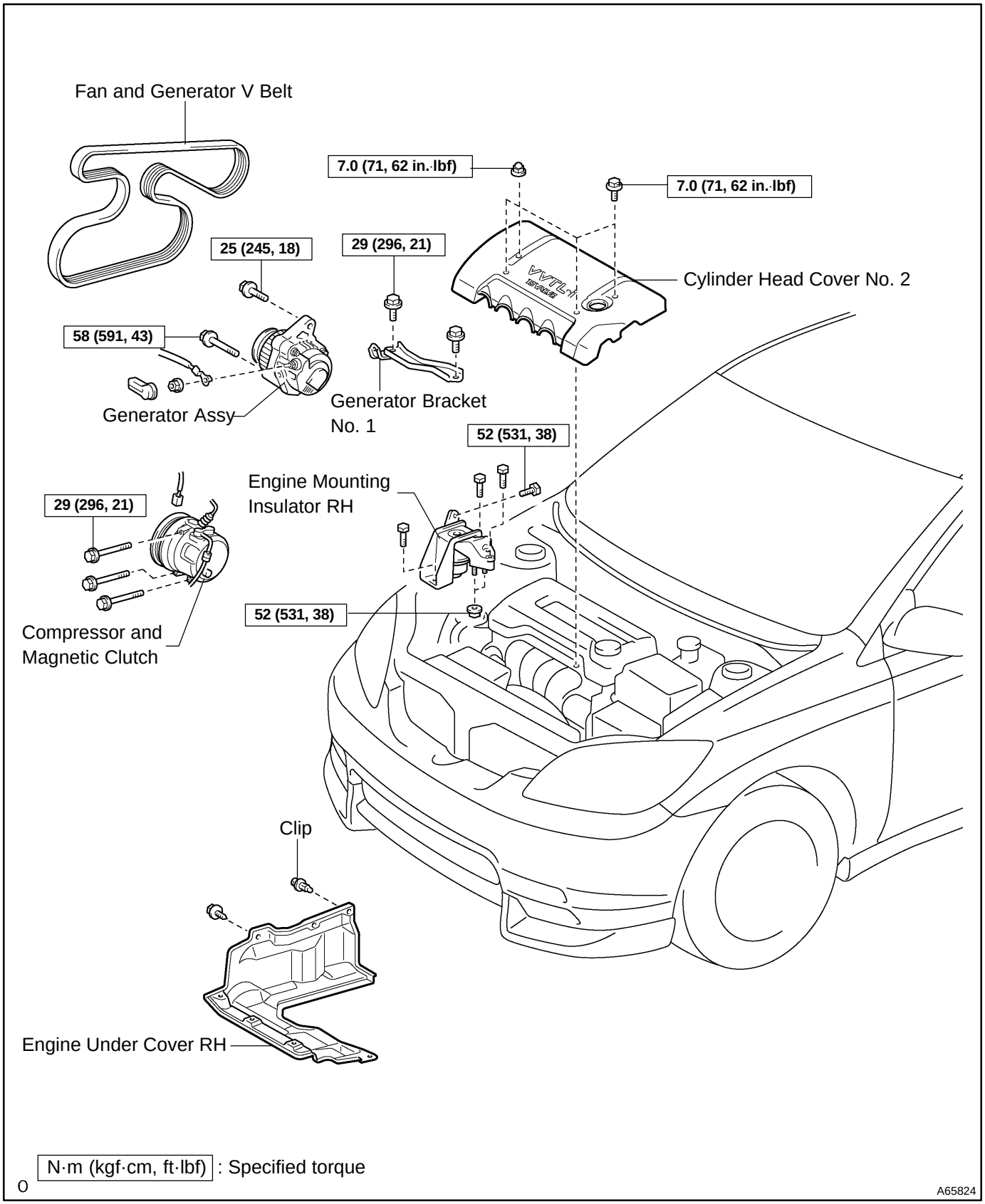

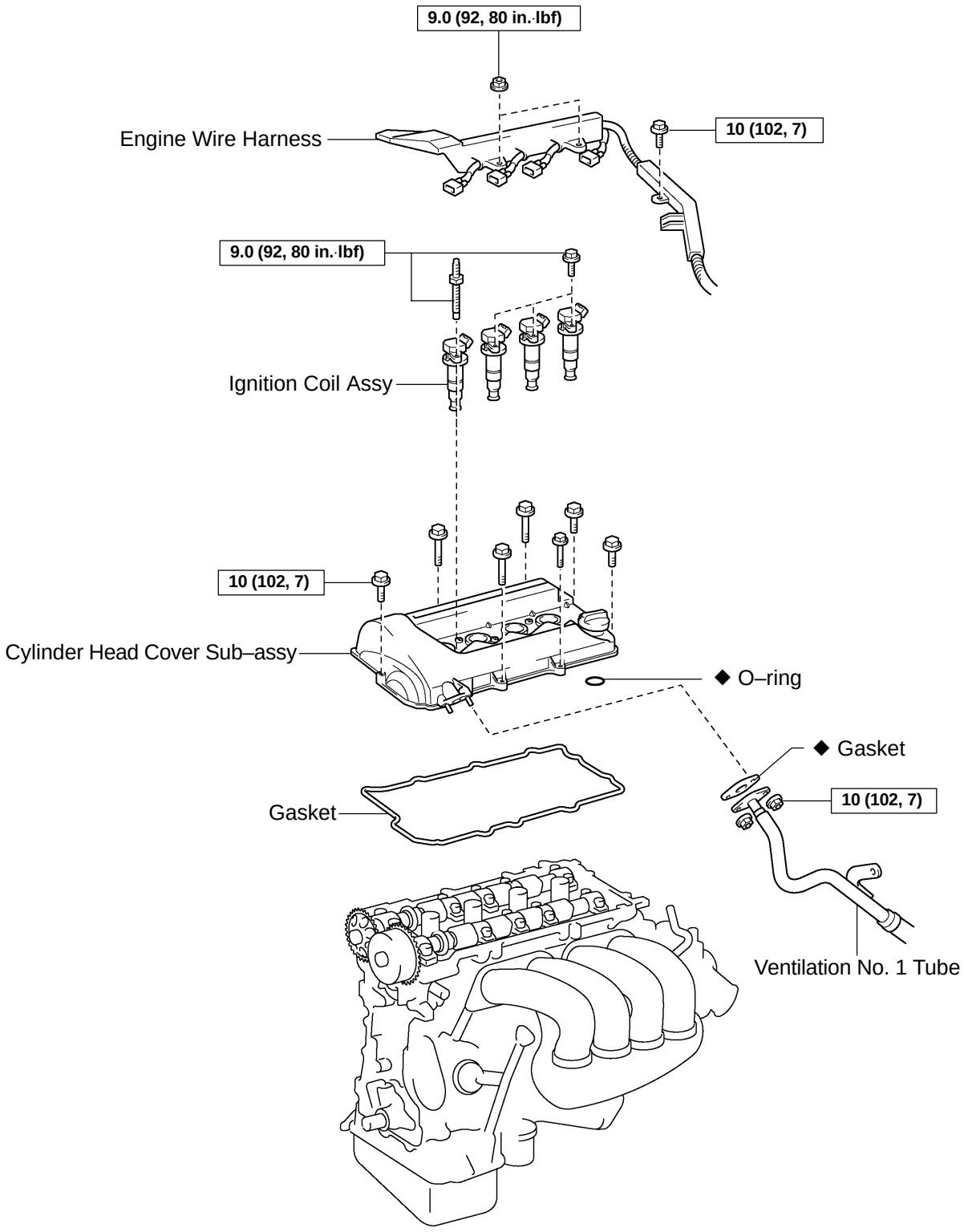

N·m (kgf·cm, ft·lbf) : Specified torque

◆ Non–reusable part

0

A65825

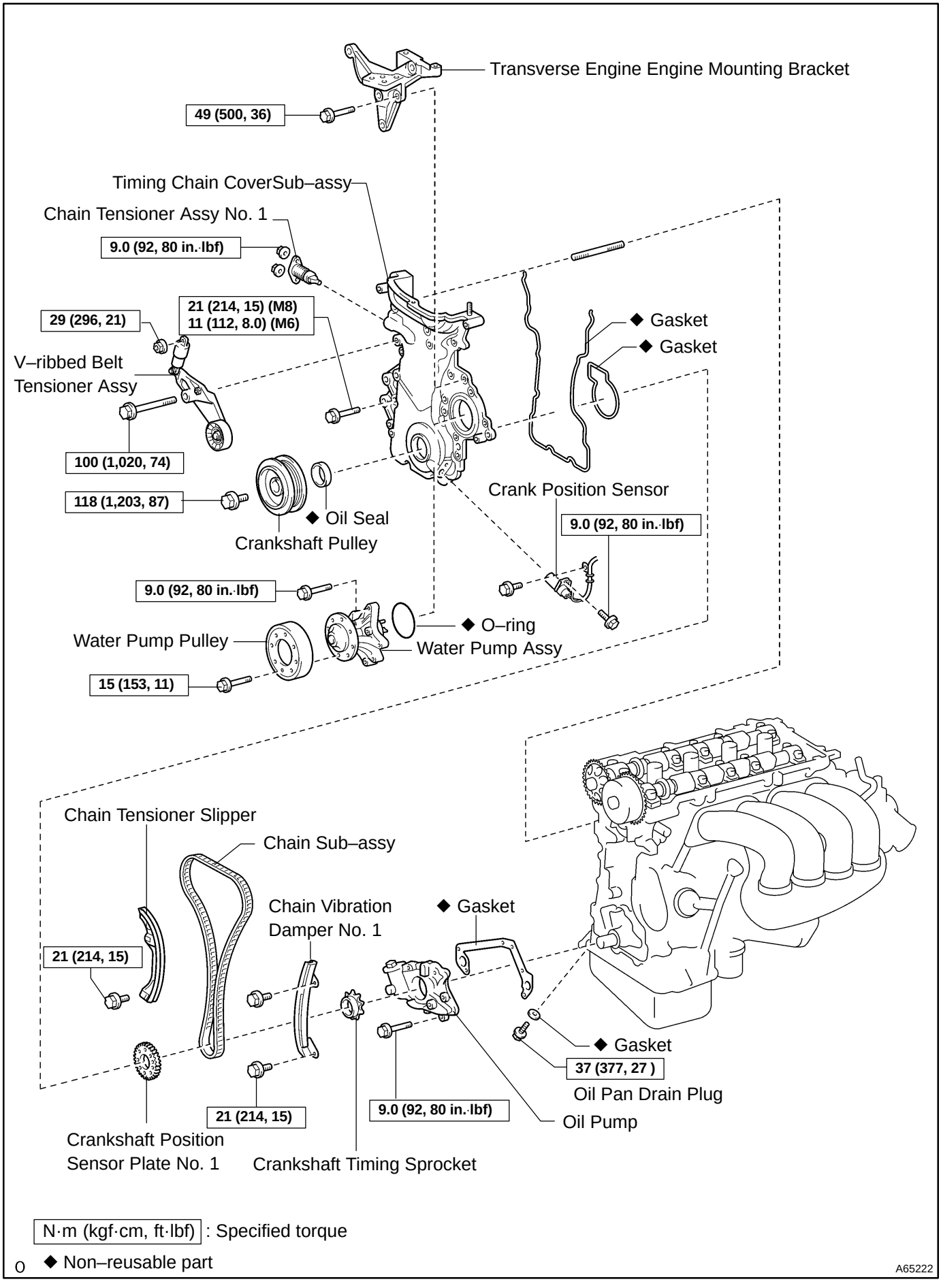
Transverse Engine Engine Mounting Bracket
49 (500, 36)
Timing Chain CoverSub–assy
Chain Tensioner Assy No. 1
9.0 (92, 80 in.·lbf)
21 (214, 15) (M8)
11 (112, 8.0) (M6)
29 (296, 21)
◆ Gasket
◆ Gasket
V–ribbed Belt
Tensioner Assy
100 (1,020, 74)
118 (1,203, 87)
◆ Oil Seal
Crankshaft Pulley
Crank Position Sensor
9.0 (92, 80 in.·lbf)
9.0 (92, 80 in.·lbf)
◆ O–ring
Water Pump Pulley
Water Pump Assy
15 (153, 11)
Chain Tensioner Slipper
Chain Sub–assy
Chain Vibration
Damper No. 1
◆ Gasket
21 (214, 15)
◆ Gasket
37 (377, 27)
Oil Pan Drain Plug
21 (214, 15)
9.0 (92, 80 in.·lbf)
Oil Pump
Crankshaft Position
Sensor Plate No. 1
Crankshaft Timing Sprocket
N·m (kgf·cm, ft·lbf) : Specified torque
◆ Non–reusable part
A65222

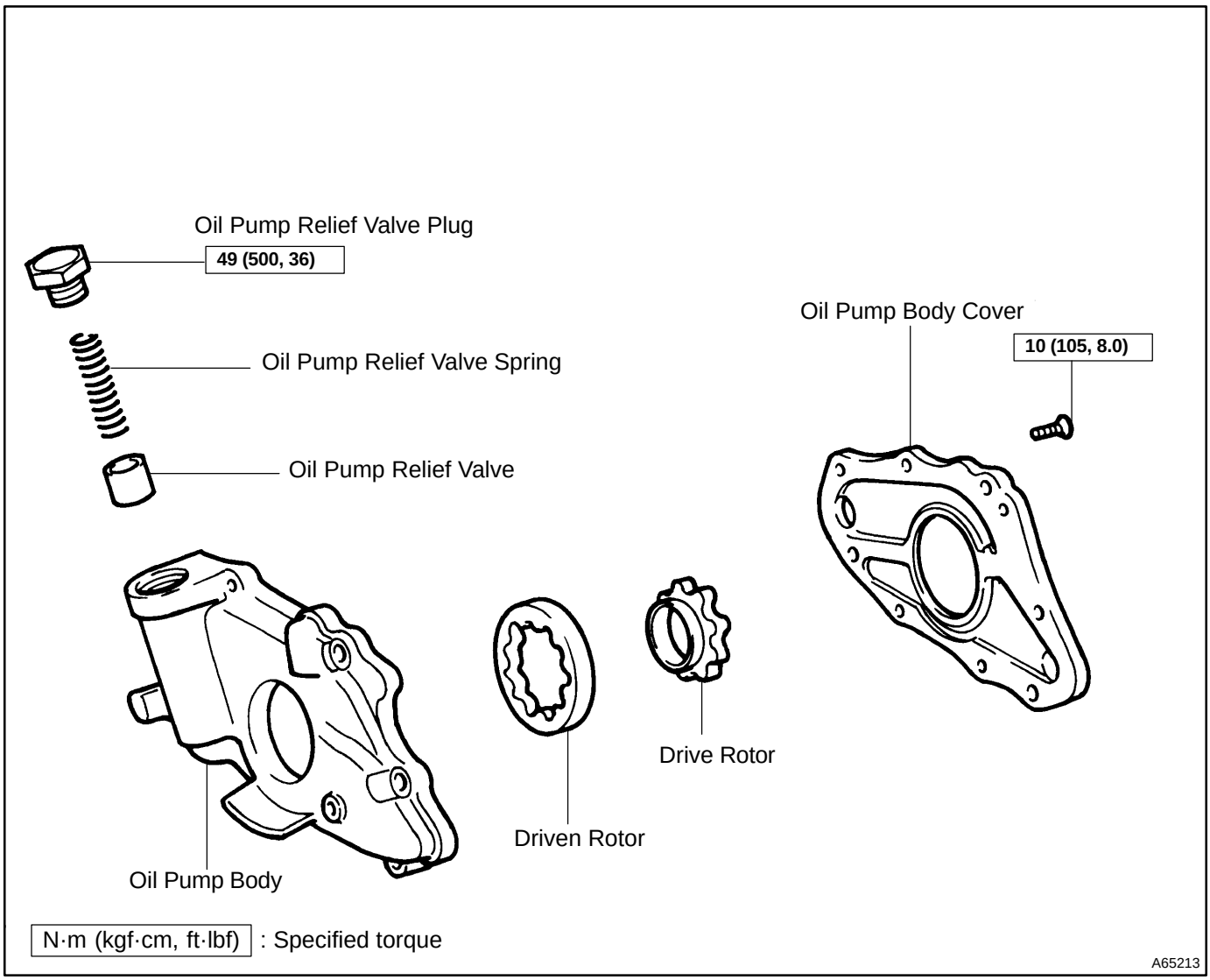
Oil Pump Relief Valve Plug
49 (500, 36)
Oil Pump Relief Valve Spring
Oil Pump Relief Valve
Oil Pump Body Cover
10 (105, 8.0)
Drive Rotor
Driven Rotor
Oil Pump Body
N·m (kgf·cm, ft·lbf) : Specified torque
A65213

OVERHAUL

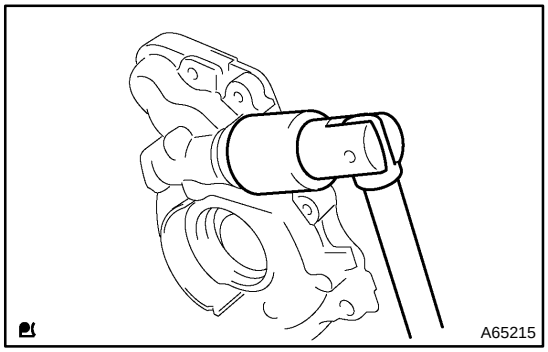

1. REMOVE OIL PUMP RELIEF VALVE

(a) Using a 28 mm socket wrench, remove the oil pump relief plug.

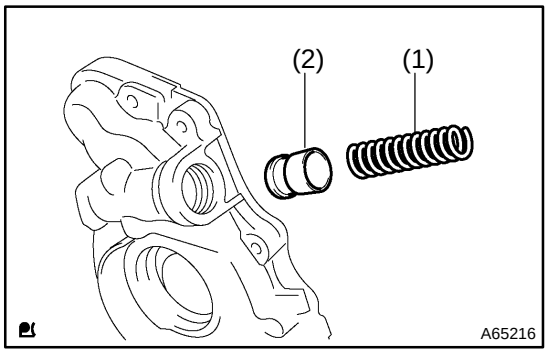

(b) Remove the oil pump relief valve spring and oil pump relief valve.
   (1) Oil pump relief valve spring
   (2) Oil pump relief valve

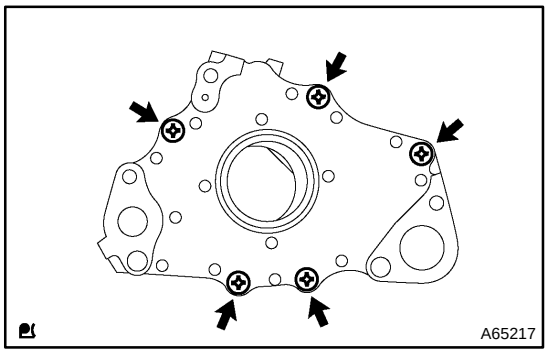

2. INSPECT OIL PUMP ASSY

(a) Remove 5 screws and oil pump cover.

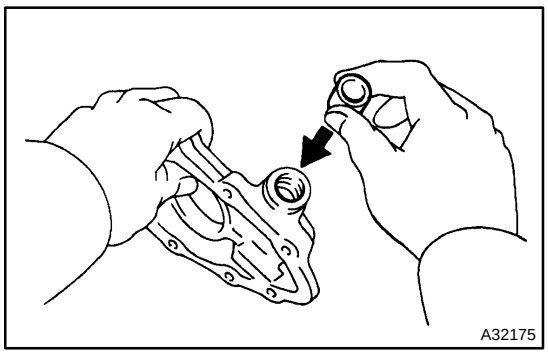

(b) Inspect oil pump relief valve.
   (1) Coat the valve with engine oil and check that it falls smoothly into the valve hole by its own weight.

(c) Inspect oil pump rotor sub–assembly.
   (1) Coat the oil pump gear set with engine oil and place them into the oil pump body. Check that the rotors revolves smoothly.

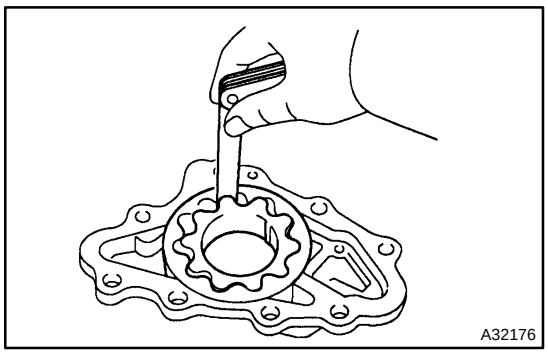

(d) Inspect rotor tip clearance.
(1) Using a feeler gauge, measure the clearance between the drive and driven rotor tips.
Standard tip clearance:
0.060 – 0.180 mm (0.0024 – 0.0071 in.)
Maximum tip clearance:
0.35 mm (0.0138 in.)

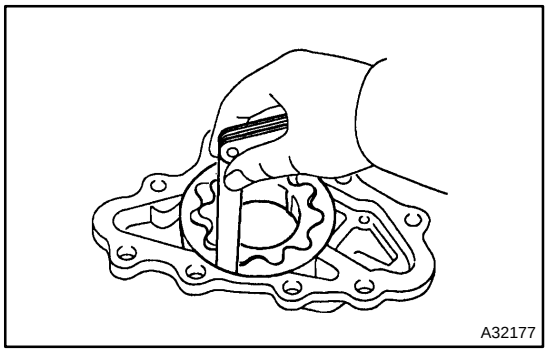

(e) Inspect body clearance.
(1) Using a feeler gauge, measure the clearance between the driven rotor and body.
Standard body clearance:
0.125 – 0.180 mm (0.0049 – 0.0071 in.)
Maximum body clearance:
0.325 mm (0.0128 in.)

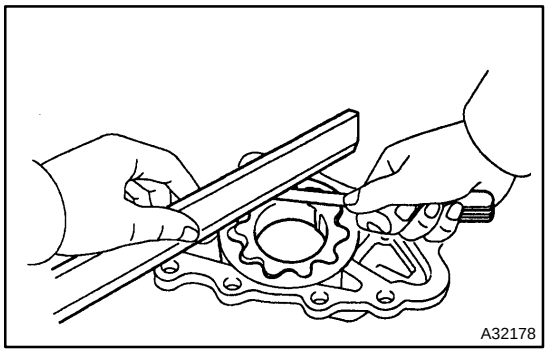

(f) Inspect rotor side clearance.
(1) Using a feeler gauge and precision straight edge, measure the clearance between the rotors and precision straight edge.
Standard side clearance:
0.030 – 0.080 mm (0.0012 – 0.0032 in.)
Maximum side clearance:
0.16 mm (0.0063 in.)

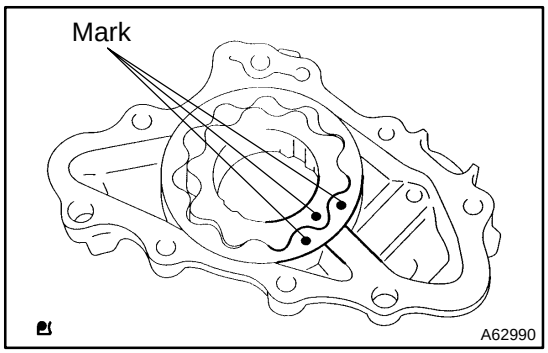

(g) Install oil pump rotor sub–assembly.
(1) Coat the oil pump gear set with engine oil and place it into pump body with the marks facing the pump body cover side.

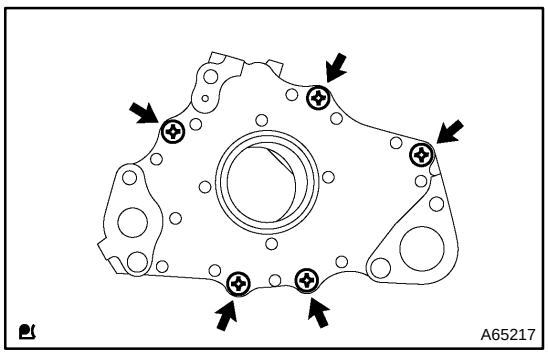

(h) Install the oil pump cover with 5 screws.
Torque: 10 N·m (105 kgf·cm, 8.0 ft·lbf)

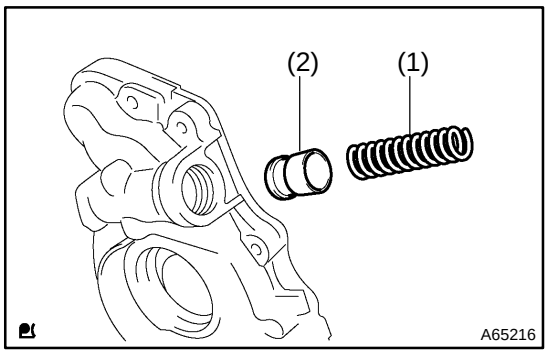

3. INSTALL OIL PUMP RELIEF VALVE

(a) Install the oil pump relief valve spring and oil pump relief valve.
- (1) Oil pump relief valve spring
- (2) Oil pump relief valve

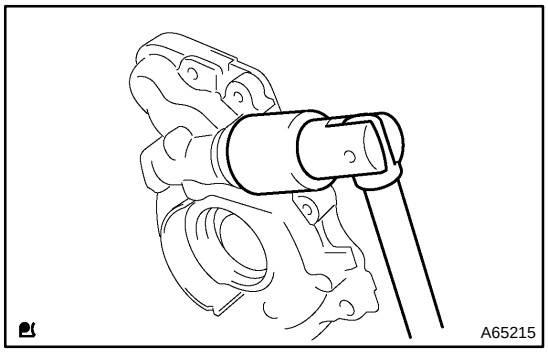

(b) Using a 28 mm socket wrench, install the oil pump relief valve plug.
Torque: 49 N·m (500 kgf·cm, 36 ft·lbf)

1707W–01

REPLACEMENT

1. DRAIN ENGINE OIL

(a) Remove the oil pan drain plug and drain the engine oil.

2. REMOVAL & INSTALLATION CHAIN SUB–ASSY(See page 14–247)

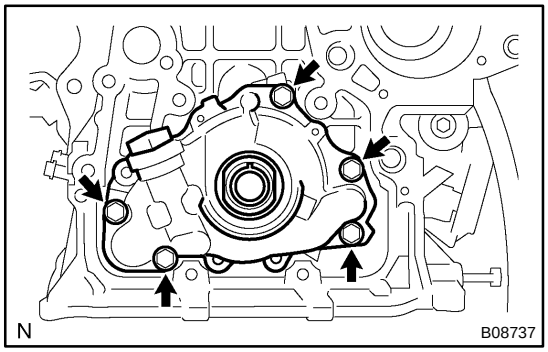

3. REMOVE OIL PUMP ASSY

(a) Remove the 5 bolts.

(b) Remove the oil pump assy and gasket.

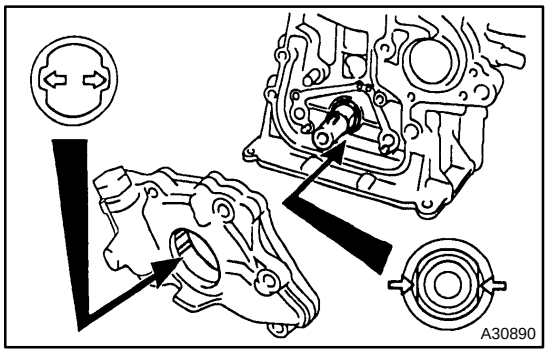

4. INSTALL OIL PUMP ASSY

(a) Place a new gasket on the cylinder block.

(b) Engage the spline teeth of the oil pump drive rotor with the large teeth of the crankshaft, and side the oil pump.

(c) Install the oil pump with the 5 bolts.
Torque: 9.0 N·m (92 kgf·cm, 80 in.·lbf)

5. INSTALL OIL PAN DRAIN PLUG

(a) Clean and install the oil pan drain plug with a new gasket.
Torque: 37 N·m (377 kgf·cm, 27 ft·lbf)

6. ADD ENGINE OIL
Capacity:
Drain and refill w/ Oil filter change 4.4 liters (4.7 US qts, 3.9 lmp. qts)
Drain and refill w/o Oil filter change 4.2 liters (4.4 US qts, 3.7 lmp. qts)
Dry fill 4.8 liters (5.1 US qts, 4.2 lmp. qts)

7. ADD COOLANT(Seepage 16–6)

8. INSPECT OIL LEAK

9. INSPECT CHECK ENGINE COOLANT LEAK(See page 16–1)

OIL FILTER SUB–ASSY (2ZZ–GE)

1707V–01

REPLACEMENT

CAUTION:

- **Prolonged and repeated contact with mineral oil will result in the removal of natural fats from the skin, leading to dryness, irritation and dermatitis. In addition, used engine oil contains potentially harmful contaminants which may cause skin cancer.**
- **Exercise caution in order to minimize the length and frequency of contact of your skin to used oil. Wear protective clothing and gloves. Wash your skin thoroughly with soap and water, or use water–less hand cleaner to remove any used engine oil. Do not use gasoline, thinners, or solvents.**
- **In order to preserve the environment, used oil and used oil filter must be disposed of only at designated disposal sites.**

1. REMOVE ENGINE UNDER COVER RH

2. DRAIN ENGINE OIL

(a) Remove the oil pan drain plug and drain the engine oil.

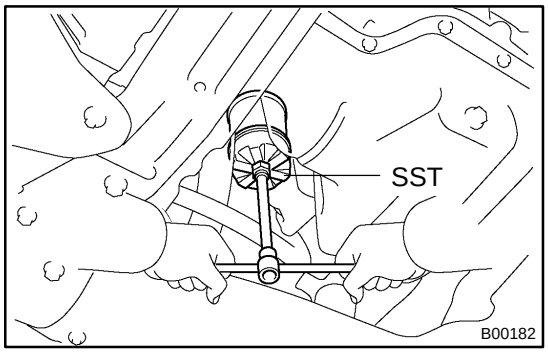

3. REMOVE OIL FILTER SUB–ASSY

(a) Using SST, remove the oil filter
SST 09228–06501

4. INSTALL OIL FILTER SUB–ASSY

(a) Check and clean the oil filter installation surface.

(b) Apply clean engine oil to the gasket of a new oil filter.

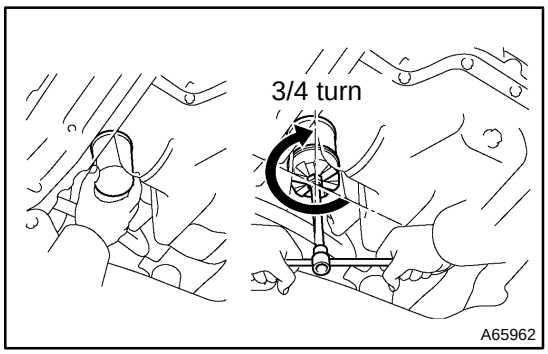

(c) Lightly screw the oil filter into place, and tighten it until the gasket contacts the seat.

(d) Using SST, tighten it an additional 3/4 turn.
SST 09228–06501

5. INSTALL OIL PAN DRAIN PLUG

(a) Clean and install the oil pan drain plug with a new gasket.
Torque: 37 N·m (377 kgf·cm, 27 ft·lbf)

6. ADD ENGINE OIL

Capacity:

Drain and refill w/ Oil filter change 4.4 liters (4.7 US qts, 3.9 lmp. qts)

Drain and refill w/o Oil filter change 4.2 liters (4.4 US qts, 3.7 lmp. qts)

Dry fill 4.8 liters (5.1 US qts, 4.2 lmp. qts)

7. INSPECT OIL LEAK

1804E–01

INSPECTION

1. SPARK PLUG

NOTICE:

- **Never use a wire brush for cleaning.**
- **Never attempt to adjust the electrode gap on used spark plug.**
- **Spark plug should be replaced every 192,000 km (120,000 miles).**

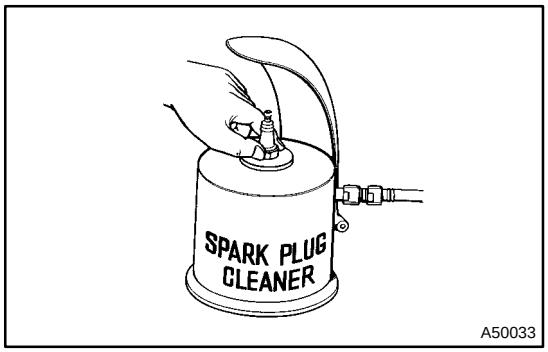

(a) Clean the spark plugs.
Air pressure: Below 588 kPa (6.0 kg/cm^2, 85 psi)
Duration: 20 seconds or less

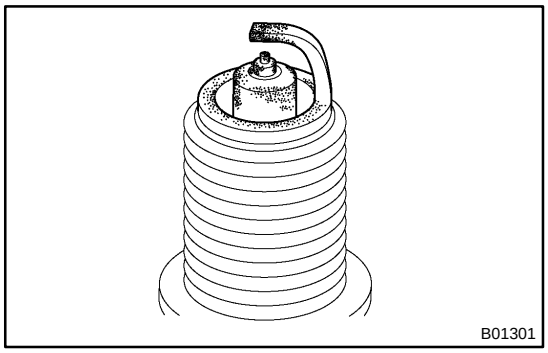

(b) Check the spark plug for thread damage and insulator damage.

HINT:

If abnormal, replace the spark plug.

Recommended spark plug:
SK16R11 (DENSO made)
IFR5A11 (NGK made)

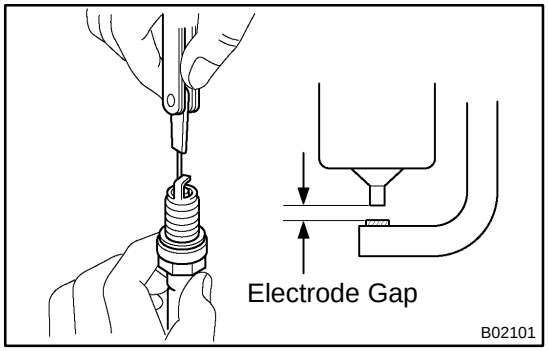

(c) Check the spark plug electrode gap.
Electrode gap: 1.1 mm (0.043 in.)

2. CRANK POSITION SENSOR NO.1

(a) Using an ohmmeter, measure the resistance between terminals.
RESISTANCE:
At cold 835 – 1,400 Ω
At hot 1,060 – 1,645 Ω

NOTICE:

"Cold" and "Hot" on the table express the temperature of the coils themselves. "Cold" is from –10°C (14°F) to 50°C (122°F) and "Hot" is from 50°C (122°F) to 100°C (212°F).

HINT:

If the resistance is not as specified, replace the crank position sensor No. 1.

3. CRANK POSITION SENSOR

(a) Using an ohmmeter, measure the resistance between terminals.

RESISTANCE:

At cold 1,630 – 2,740 Ω

At hot 2,065 – 3,225 Ω

NOTICE:

"Cold" and "Hot" on the table express the temperature of the coils themselves. "Cold" is from –10°C (14°F) to 50°C (122°F) and "Hot" is from 50°C (122°F) to 100°C (212°F).

HINT:

If the resistance is not as specified, replace the crank position sensor.

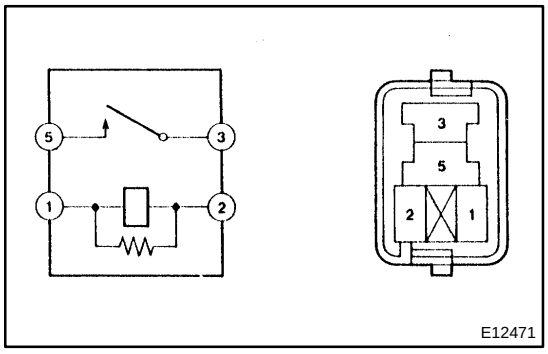

4. IGNITION RELAY

(a) Continuity inspection.

(1) Using an ohmmeter, check that continuity exists between each terminal.

Specified condition:

Between terminal 1 and 2 Continuity

Between terminal 3 and 5 No continuity

(2) Using an ohmmeter, check that continuity exists between terminals 3 and 5 when the battery voltage is applied across terminals 1 and 2.

IGNITION SYSTEM (1ZZ–FE)

1804H–01

ON–VEHICLE INSPECTION

NOTICE:

"Cold" and "Hot" in these sentences express the temperature of the coils themselves. "Cold" is from –10°C (14°F) to 50°C (122°F) and "Hot" is from 50°C (122°F) to 100°C (212°F).

1. INSPECT IGNITION COIL (WITH IGNITER) AND SPARK TEST

(a) Confirm DTC.

NOTICE:

If DTC is indicated, carry out troubleshooting in accordance with the procedure on the following DTC.

(b) Check that the spark occurs.

(1) Remove the ignition coils (with igniter).

(2) Using a 16 mm (0.63 in) plug wrench, remove the spark plugs.

(3) Install the spark plugs to each ignition coils (with igniter), and connect the ignition coil connectors.

(4) Disconnect the 4 injector connectors.

(5) Ground the spark plugs.

(6) Check if spark occurs while engine is being cranked.

NOTICE:

- **Be sure to ground the spark plug, when checking.**
- **Replace the ignition coil when it is given an impact.**
- **Do not crank the engine for more than 2 seconds.**

HINT:

If the spark does not occur, do the test as follow.

(c) Using a 16 mm (0.63 in.) plug wrench, install the spark plugs.

Torque: 25 N·m (255 kgf·cm, 18 ft·lbf)

(d) Install the ignition coil with igniter.

Torque: 9.0 N·m (92 kgf·cm, 80 in.·lbf)

1804G–01

INSPECTION

1. SPARK PLUG

NOTICE:

- **Never use a wire brush for cleaning.**
- **Never attempt to adjust the electrode gap on used spark plug.**
- **Spark plug should be replaced every 192,000 km (120,000 miles).**

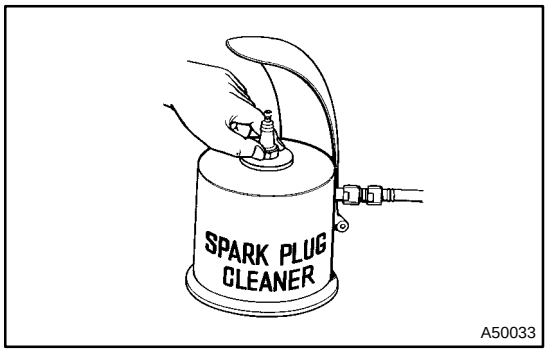

(a) Clean the spark plugs.
Air pressure: Below 588 kPa (6.0 kg/cm^2, 85 psi)
Duration: 20 seconds or less

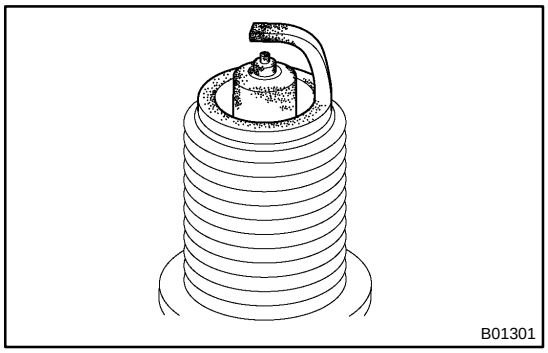

(b) Check the spark plug for thread damage and insulator damage.

HINT:

If abnormal, replace the spark plug.

Recommended spark plug:
SK20R11 (DENSO made)
IFR6A11 (NGK made)

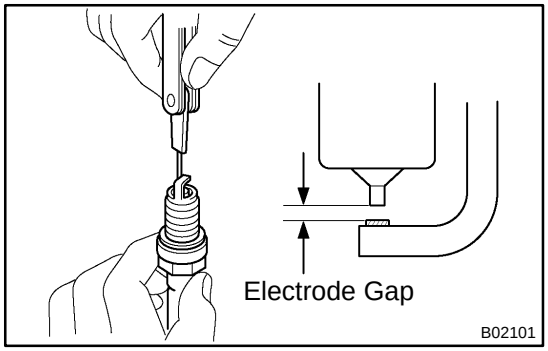

(c) Check the spark plug electrode gap.
Electrode gap: 1.1 mm (0.043 in.)

2. CAM POSITION SENSOR

(a) Using an ohmmeter, measure the resistance between terminals.
RESISTANCE:
At cold 835 – 1,400 Ω
At hot 1,060 – 1,645 Ω

NOTICE:

"Cold" and "Hot" on the table express the temperature of the coils themselves. "Cold" is from –10°C (14°F) to 50°C (122°F) and "Hot" is from 50°C (122°F) to 100°C (212°F).

HINT:

If the resistance is not as specified, replace the crank position sensor No. 1.

3. CRANK POSITION SENSOR

(a) Using an ohmmeter, measure the resistance between terminals.

RESISTANCE:

At cold 1,630 – 2,740 Ω

At hot 2,065 – 3,225 Ω

HINT:

If the resistance is not as specified, replace the crank position sensor.

NOTICE:

"Cold" and "Hot" on the table express the temperature of the coils themselves. "Cold" is from –10°C (14°F) to 50°C (122°F) and "Hot" is from 50°C (122°F) to 100°C (212°F).

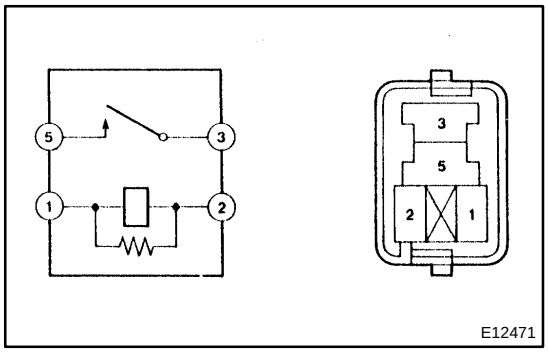

4. IGNITION RELAY

(a) Continuity inspection.

(1) Using an ohmmeter, check that continuity exists between each terminal.

Specified condition:

Between terminal 1 and 2 Continuity

Between terminal 3 and 5 No continuity

(2) Using an ohmmeter, check that continuity exists between terminals 3 and 5 when the battery voltage is applied across terminals 1 and 2.

IGNITION SYSTEM (2ZZ–GE)

1804F–01

ON–VEHICLE INSPECTION

NOTICE:

"Cold" and "Hot" in these sentences express the temperature of the coils themselves. "Cold" is from –10°C (14°F) to 50°C (122°F) and "Hot" is from 50°C (122°F) to 100°C (212°F).

1. INSPECT IGNITION COIL (WITH IGNITER) AND SPARK TEST

(a) Confirm DTC.

NOTICE:

If DTC is indicated, carry out troubleshooting in accordance with the procedure on the following DTC.

(b) Check that the spark occurs.

(1) Remove the ignition coils (with igniter).

(2) Using a 16 mm (0.63 in) plug wrench, remove the spark plugs.

(3) Install the spark plugs to each ignition coils (with igniter), and connect the ignition coil connectors.

(4) Disconnect the 4 injector connectors.

(5) Ground the spark plugs.

(6) Check if spark occurs while engine is being cranked.

NOTICE:

- **Be sure to ground the spark plug, when checking.**
- **Replace the ignition coil when it is given an impact.**
- **Do not crank the engine for more than 2 seconds.**

HINT:

If the spark does not occur, do the test as follow.

(c) Using a 16 mm (0.63 in.) plug wrench, install the spark plugs.

Torque: 18 N·m (178 kgf·cm, 13 ft·lbf)

(d) Install the ignition coil with igniter.

Torque: 9.0 N·m (92 kgf·cm, 80 in.·lbf)

STARTING SYSTEM

INSPECTION

190C4–02

1. STARTER ASSY

NOTICE:

These tests must be done within 3 to 5 seconds to avoid burning out the coil.

(a) Disconnect the field coil lead wire from terminal C.

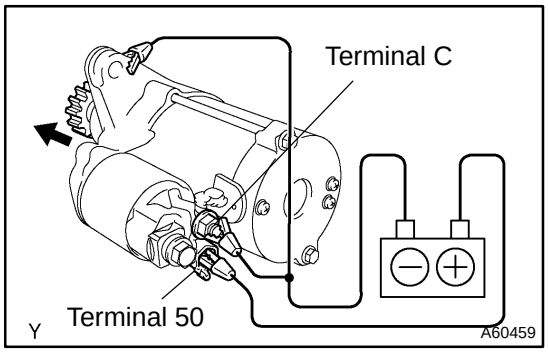

(b) Connect the battery to the magnetic switch as shown. Check that the clutch pinion gear moves outward.

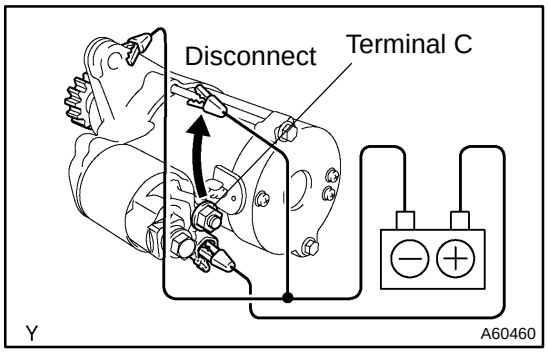

(c) With battery connected as above with the clutch pinion gear out, disconnect the negative (–) lead from terminal C. Check that the pinion gear remains out.

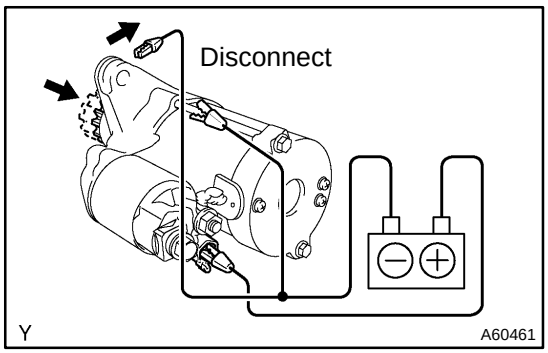

(d) Disconnect the negative (–) lead from the switch body. Check that the clutch pinion gear returns inward.

(e) Connect the lead wire to the terminal C with the nut.
Torque: 6.5 N·m (66 kgf·cm, 58 in.·lbf)

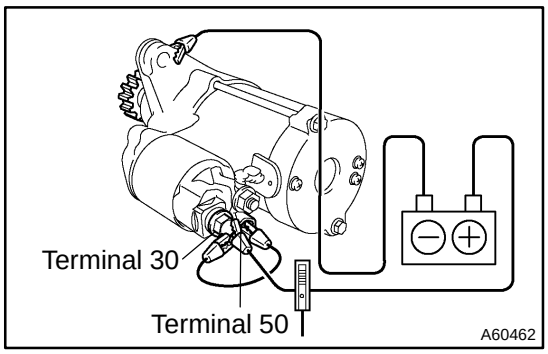

(f) Connect the battery and ammeter to the starter as shown.
(g) Check that the starter rotates smoothly and steadily with the pinion gear moving out. Check that the ammeter shows the specified current.
Specified current: 90 A or less at 11.5 V

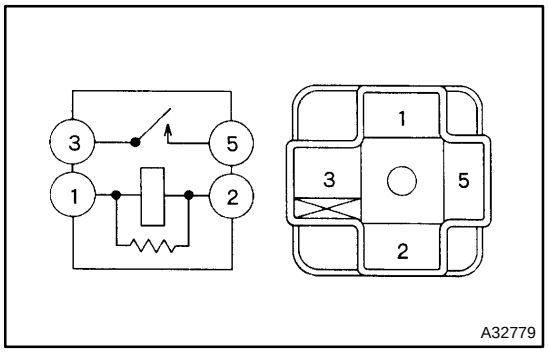

2. STARTER RELAY ASSY

(a) Inspect the relay continuity.
(1) Using an ohmmeter, check that there is continuity between terminals 1 and 2.

If there is no continuity, replace the relay.

(2) Check that there is no continuity between terminals 3 and 5.

If there is continuity, replace the relay.

(b) Inspect the relay operation.
(1) Apply battery positive voltage across terminals 1 and 2.
(2) Using an ohmmeter, check that there is continuity between terminals 3 and 5.

If there is no continuity, replace the relay.

190C9–02

ON–VEHICLE INSPECTION

1. CHECK BATTERY ELECTROLYTE LEVEL

(a) Check the electrolyte quantity of each cell (Maintenance–Free Battery).
  (1) If under the lower level, replace the battery (or add distilled water if possible) and check the charging system.

(b) Check the electrolyte quantity of each cell (Except Maintenance–Free Battery).
  (1) If under the lower level, add distilled water.

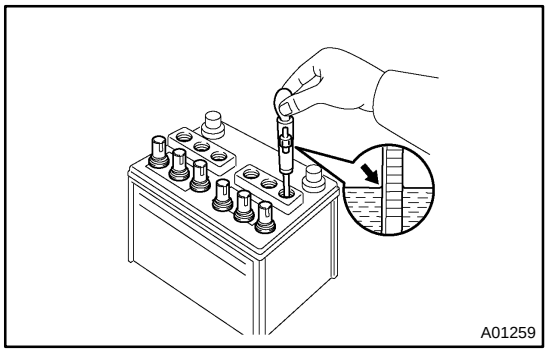

2. CHECK BATTERY SPECIFIC GRAVITY (Except Maintenance–Free Battery)

(a) Check the specific gravity of each cell.
  Standard specific gravity: 1.25 – 1.29 at 20°C (68°F)

HINT:
If the specific gravity is less than specification, charge the battery.

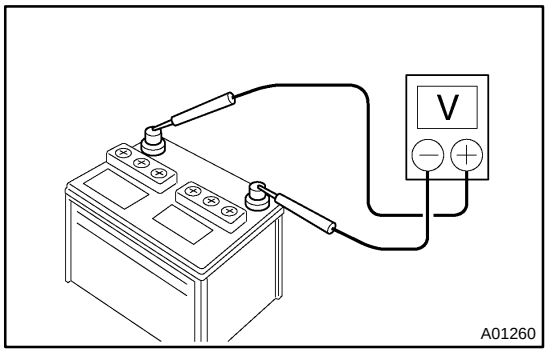

3. CHECK BATTERY VOLTAGE

(a) After having driven the vehicle and in the case that 20 minutes have not passed after having stopped the engine, turn the ignition switch ON and turn on the electrical system (headlight, blower motor, rear defogger etc.) for 60 seconds to remove the surface charge.
(b) Turn the ignition switch OFF and turn off the electrical systems.
(c) Measure the battery voltage between the negative (–) and positive (+) terminals of the battery.
  Standard voltage: 12.5 – 12.9 V at 20°C (68°F)

HINT:
If the voltage is less than specification, charge the battery.

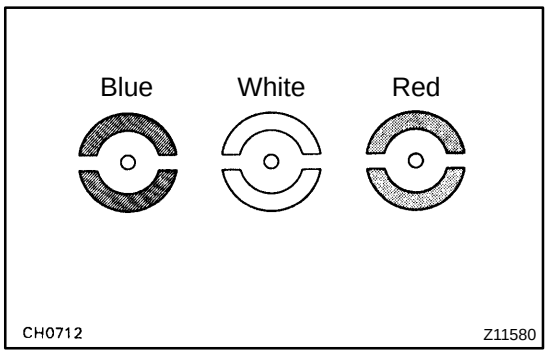

(d) Check the indicator as shown in the illustration.

HINT:
- Blue: OK
- White: Charging Necessary
- Red: Insufficient Water

4. CHECK BATTERY TERMINALS, FUSIBLE LINK AND FUSES

(a) Check that the battery terminals are not loose or corroded.
(b) Check the fusible link, H–fuses and fuses for continuity.

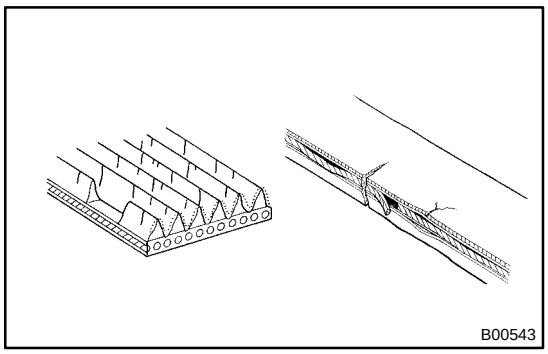

5. INSPECT DRIVE BELT

(a) Visually check the belt for excessive wear, frayed cords etc.

HINT:

- If any defect has been found, replace the drive belt.
- Cracks on the rib side of a belt are considered acceptable. If the belt has chunks missing from the ribs, it should be replaced.

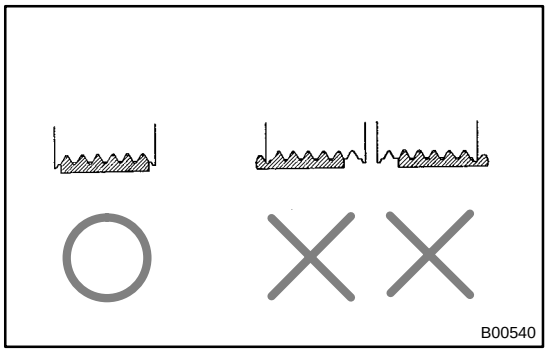

(b) Check that it fits properly in the ribbed grooves.

HINT:

Check with your hand to confirm that the belt has not slipped out of the groove on the bottom of the pulley.

6. VISUALLY CHECK ALTERNATOR WIRING

(a) Check that the wiring is in good condition.

7. LISTEN FOR ABNORMAL NOISES FROM ALTERNATOR

(a) Check that there is no abnormal noise from the alternator while the engine is running.

8. INSPECT CHARGE WARNING LIGHT CIRCUIT

(a) Turn the ignition switch ON. Check that the charge warning light comes on.

(b) Start the engine. Check that the light goes off.

HINT:

If the light does not operate as specified, troubleshoot the charge warning light circuit.

9. INSPECT CHARGING CIRCUIT WITHOUT LOAD

(a) If a battery/alternator tester is available, connect the tester to the charging circuit as permanufacturer's instructions.

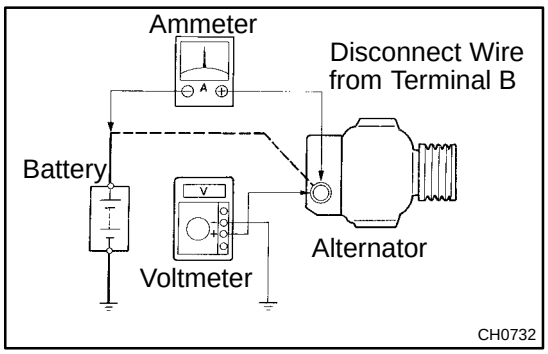

(b) If a tester is not available, connect a voltmeter to the charging circuit as follows.

(1) Disconnect to the wire from terminal B of the alternator and connect it to the negative (–) lead of the ammeter.

(2) Connect the positive (+) lead of the ammeter to terminal B of the alternator.

(3) Connect the positive (+) lead of the voltmeter to terminal B of the alternator.

(4) Ground the negative (–) lead of the voltmeter.

(c) Check the charging circuit (DENSO made).
(1) With the engine running from idle to 2,000 rpm, check the reading on the ammeter and voltmeter.
Standard amperage: 10 A or less
Standard voltage: 12.9 – 14.9 V

10. INSPECT CHARGING CIRCUIT WITH LOAD

(a) With the engine running at 2,000 rpm, turn on the high beam headlights and place the heater blower switch at ”HI”.
(b) Check the reading on the ammeter.
Standard amperage: 30 A or more

HINT:

- If the ammeter reading is less than standard amperage, repair the alternator.
- If the battery is fully charged, the indication will sometimes be less than standard amperage.

CHARGING SYSTEM

190C8–02

PRECAUTION

1. **Check that the battery cables are connected to the correct terminals.**
2. **Disconnect the battery cables when the battery is given a quick charge.**
3. **Do not perform tests with a high voltage insulation resistance tester.**
4. **Never disconnect the battery while the engine is running.**
5. **Check that the charging cable is tightened on terminal B of the alternator and the fuse box.**
6. **Do not check whether the alternator generates or not with connecting terminal F to other terminal.**

190C6–02

COMPONENTS

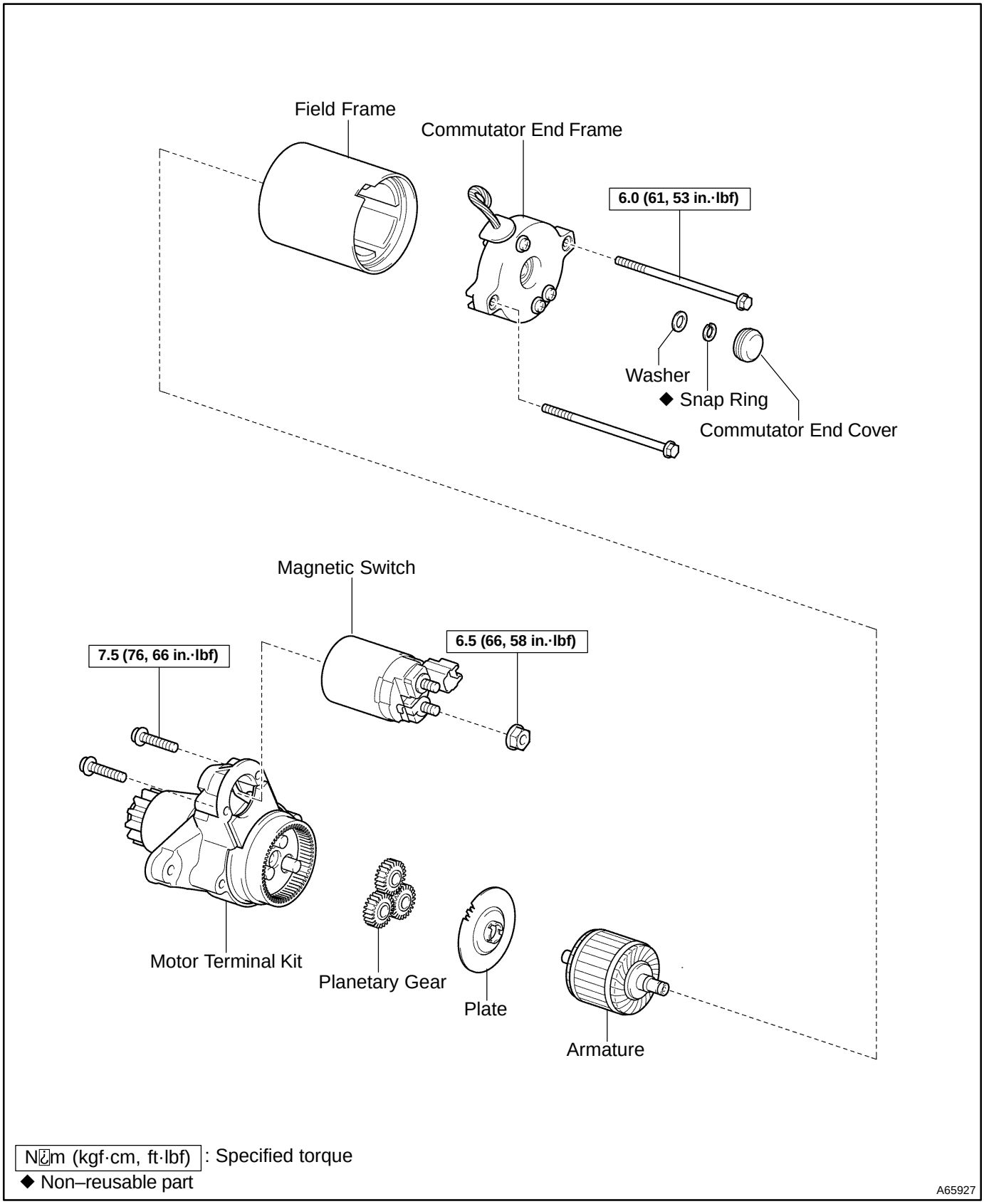

N·m (kgf·cm, ft·lbf) : Specified torque
◆ Non–reusable part

A65927

OVERHAUL

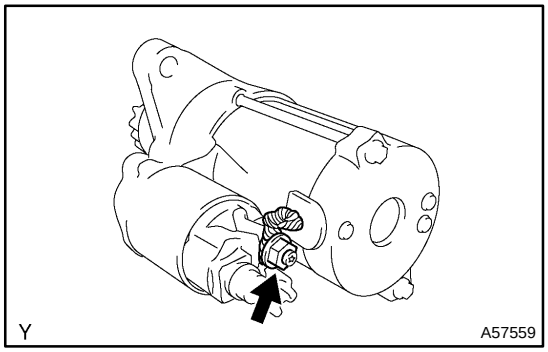

1. REMOVE REPAIR SERVICE STARTER KIT

(a) Remove the nut, and disconnect the lead wire from the repair service starter kit.

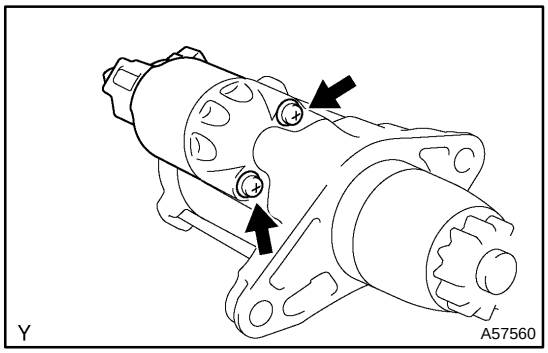

(b) Remove the 2 screws holding the repair service starter kit to the starter housing.

(c) Remove the repair service starter kit.

(d) Remove the return spring and plunger.

2. REMOVE STARTER COMMUTATOR END FRAME COVER

(a) Using a screwdriver, remove the cover.

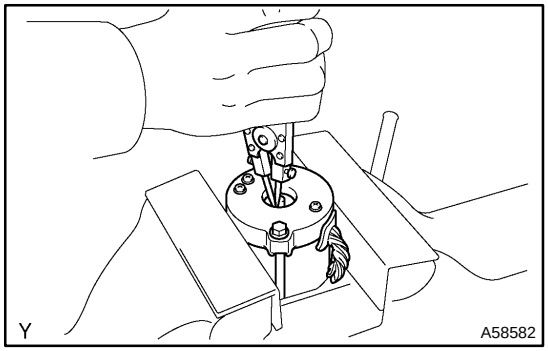

3. REMOVE STARTER COMMUTATOR END FRAME ASSY

(a) Using snap ring pliers, remove the snap ring and plate washer.

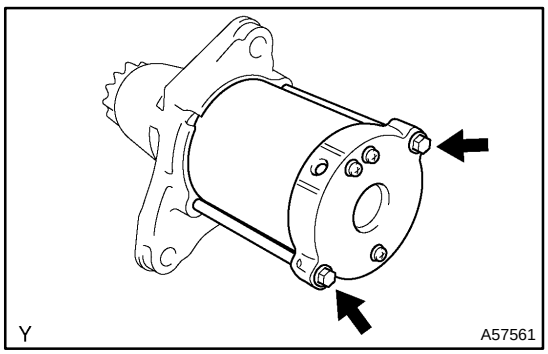

(b) Remove the 2 through bolts, and pull out the starter yoke assy together with the commutator end frame assy.

4. REMOVE STARTER YOKE ASSY

(a) Remove the starter armature assy from starter yoke assy.

5. REMOVE STARTER ARMATURE PLATE

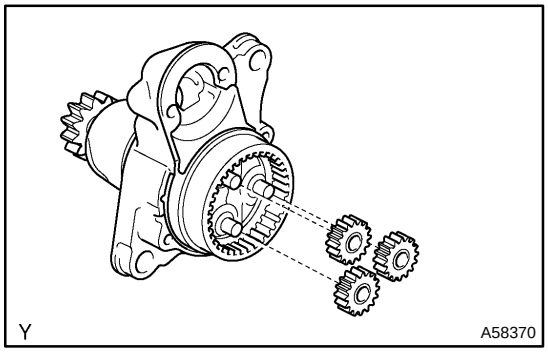

6. REMOVE PLANET GEAR

(a) Remove the 3 planetary gears.

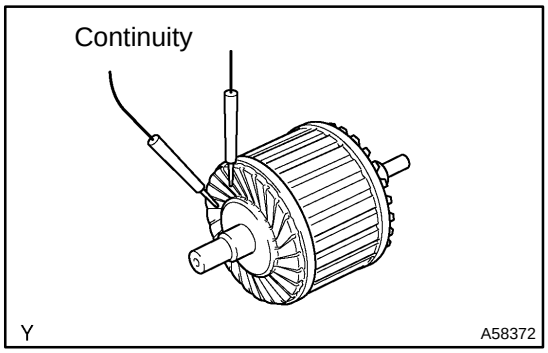

7. INSPECT STARTER ARMATURE ASSY

(a) Check the commutator for open circuit.

(1) Using an ohmmeter, check that there is continuity between the segments of the commutator.

If there is no continuity between any segments, replace the armature.

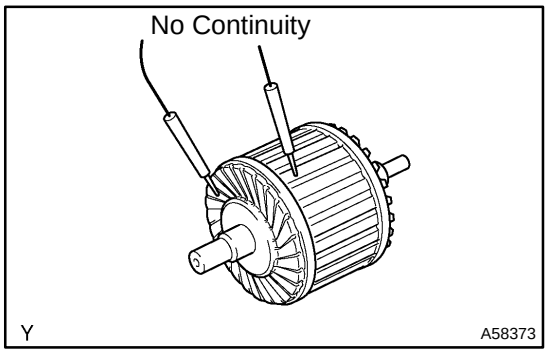

(b) Check the commutator for ground.

(1) Using an ohmmeter, check that there is no continuity between the commutator and armature coil core.

If there is continuity, replace the armature.

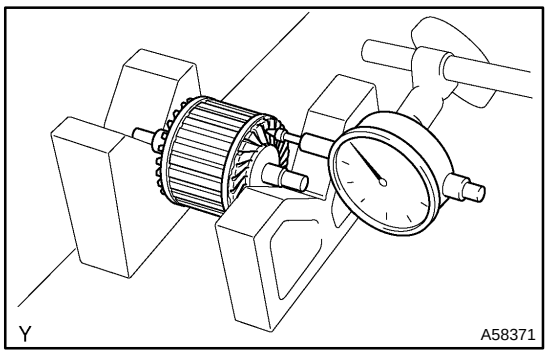

(c) Check the commutator for dirty and burn on surface.

If the surface is dirty or burnt, correct it with sandpaper (No.400) or a lathe.

(d) Check for the commutator circuit runout.

(1) Place the commutator on V–blocks.

(2) Using a dial indicator, measure the circle runout.

Maximum circle runout: 0.05 mm (0.0020 in.)

If the circle runout is greater than maximum, replace the armature.

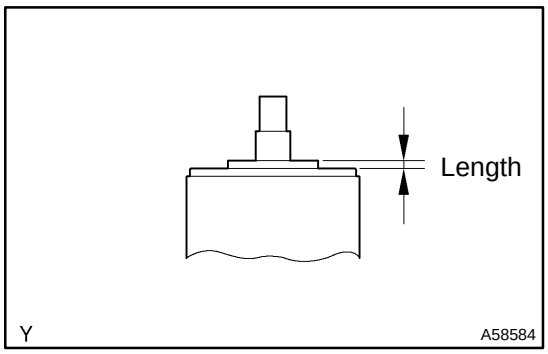

(e) Using vernier calipers, measure the commutator length.
Standard length: 3.3 mm (0.1299 in.)
Maximum length: 4.0 mm (0.1575 in.)

If the length is greater than maximum, replace the armature.

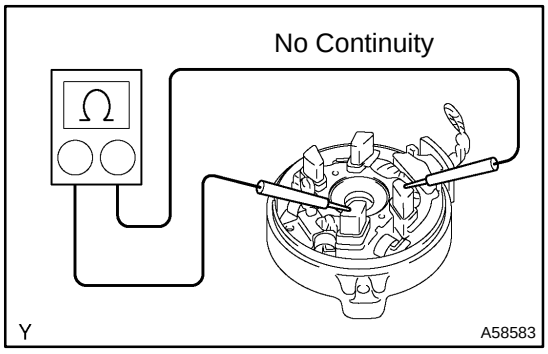

8. INSPECT STARTER COMMUTATOR END FRAME ASSY

(a) Check the brush holder.
(1) Using an ohmmeter, check that there is no continuity between the positive (+) and negative (–) brush holders.

If the there is continuity repair or replace the starter commutator end frame assy.

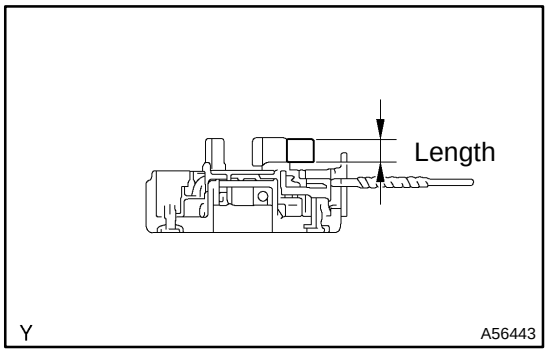

(b) Using vernier calipers, measure the brush holder length.
Standard length: 9.0 mm (0.3543 in.)
Maximum length: 4.0 mm (0.0787 in.)

If the length is greater than maximum, replace the starter commutator end frame assy.

9. INSPECT STARTER CENTER BEARING CLUTCH SUB–ASSY

(a) Check the gear teeth on the planetary gear, internal gear and starter clutch for wear or damage.

If the gear is damaged, replace it.

If damaged, replace the gear or clutch assembly. If damaged, also check the drive plate ring gear for wear or damage.

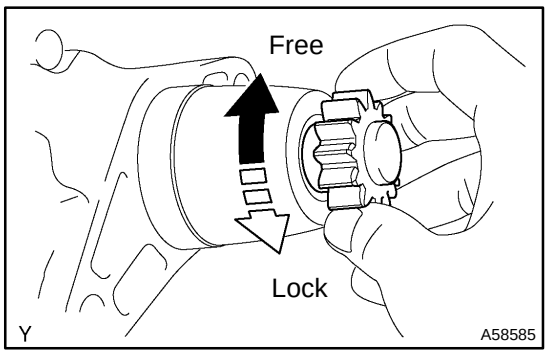

(b) Check the starter clutch.
(1) Rotate the clutch pinion gear clockwise and check that it turns freely. Try to rotate the clutch pinion gear counterclockwise and check that it locks.

If necessary, replace the starter clutch.

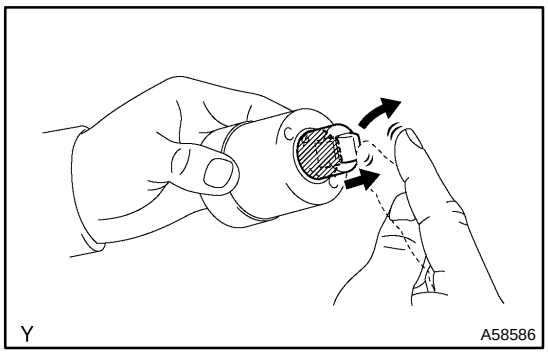

10. INSPECT REPAIR SERVICE STARTER KIT

(a) Check the plunger.
  (1) Push in the plunger and check that it returns quickly to its original position.

If necessary, replace the repair service starter kit.

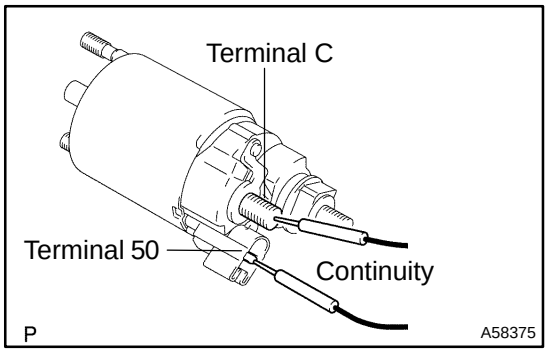

(b) Check the pull–in coil for open circuit.
  (1) Using an ohmmeter, check that there is continuity between terminals 50 and C.

If there is no continuity, replace the repair service starter kit.

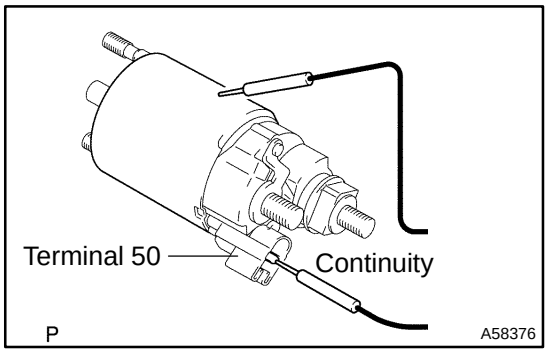

(c) Check the hold–in coil for open circuit.
  (1) Using an ohmmeter, check that there is continuity between terminal 50 and the switch body.

If there is no continuity, replace the repair service kit.

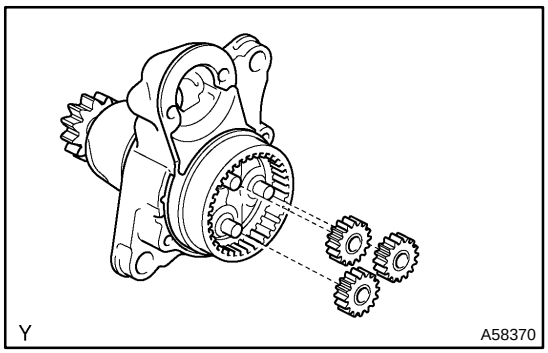

11. INSTALL PLANET GEAR

(a) Apply grease to the planetary gears and pin parts of the planetary shaft.
(b) Install the 3 planetary gears.
(c) Align the cutout of the plate with the protrusion inside the shock absorber.

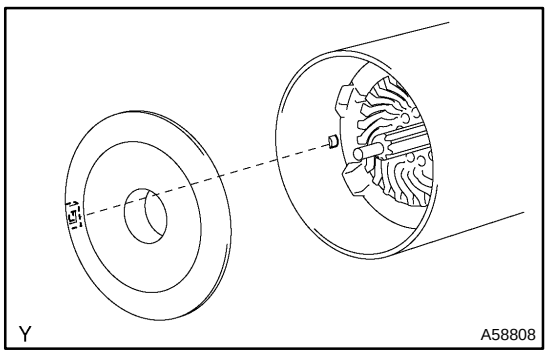

12. INSTALL STARTER ARMATURE PLATE

(a) Apply grease to the planetary gears and pin parts of the planetary shaft.
(b) Align the cutout of the plate with the protrusion inside the shock absorber, and install the plate.

13. INSTALL STARTER ARMATURE ASSY

(a) Apply grease to the washer plate and armature shaft.
(b) Install the armature shaft to the starter commutator end frame assy.
(c) Using snap ring pliers, install the plate washer and new snap ring.

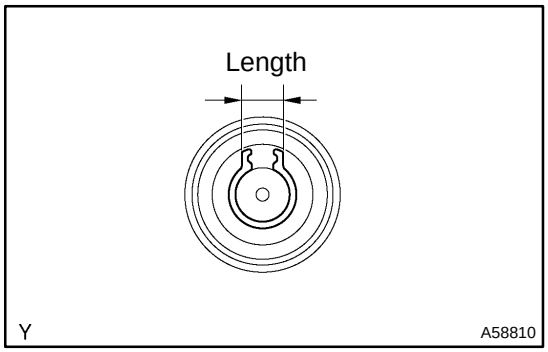

(d) Using vernier calipers, mesure the snap ring.
Maximum length: 5.0 mm (0.1969 in.)

If the length is greater than maximum, replace the new snap ring.

14. INSTALL STARTER COMMUTATOR END FRAME COVER

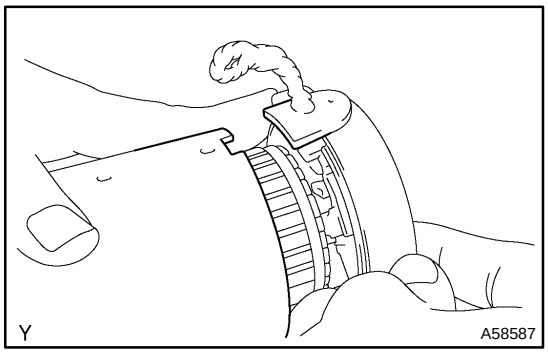

15. INSTALL STARTER YOKE ASSY

(a) Align the starter commutator rubber end frame with the cutout of starter yoke.
(b) Install starter yoke assy to starter commutator end frame.

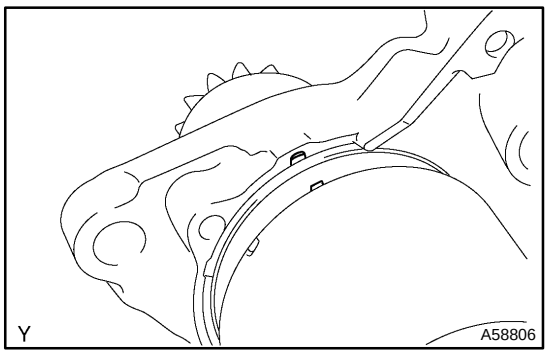

16. INSTALL STARTER COMMUTATOR END FRAME ASSY

(a) Align the starer yoke assy with the cutout of motor terminal starter kit.

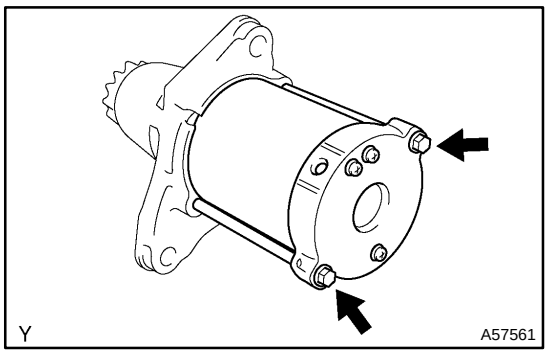

(b) Install the starter yoke assy with the 2 through bolts.
Torque: 6.0 N·m (61 kgf·cm, 52 in.·lbf)

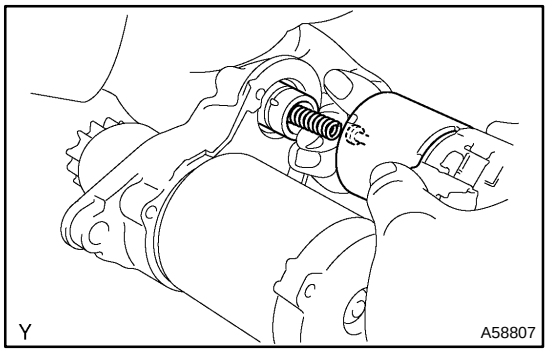

17. INSTALL REPAIR SERVICE STARTER KIT
(a) Apply grease to the plunger and hook.
(b) Hang the plunger hook of the repair service starter kit to the drive lever.
(c) Install the plunger and return spring.
(d) Install the repair service starter kit with the 2 screws.
Torque: 7.5 N·m (80 kgf·cm, 69 in.·lbf)
(e) Apply grease to the nut of the lead wire.

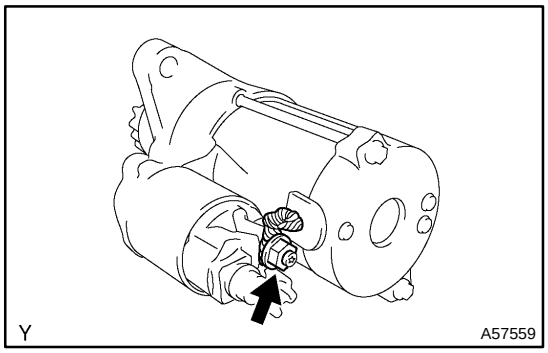

(f) Connect the lead wire to the terminal with the nut.
Torque: 6.5 N·m (66 kgf·cm, 58 in.·lbf)

STARTER ASSY

190C5–02

REPLACEMENT

1. REMOVE ENGINE UNDER COVER RH

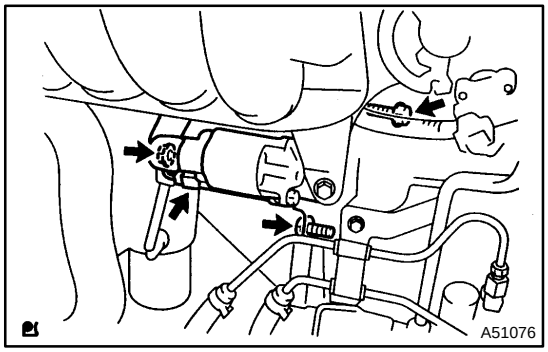

2. REMOVE STARTER ASSY

(a) Disconnect the starter connector.
(b) Remove the nut and disconnect the starter wire.
(c) Remove the 2 bolts and starter.

3. INSTALL STARTER ASSY

Torque:
Bolt 37 N·m (378 kgf·cm, 27 ft·lbf)
Nut 9.8 N·m (100 kgf·cm, 7 ft·lbf)

190CB–02

COMPONENTS

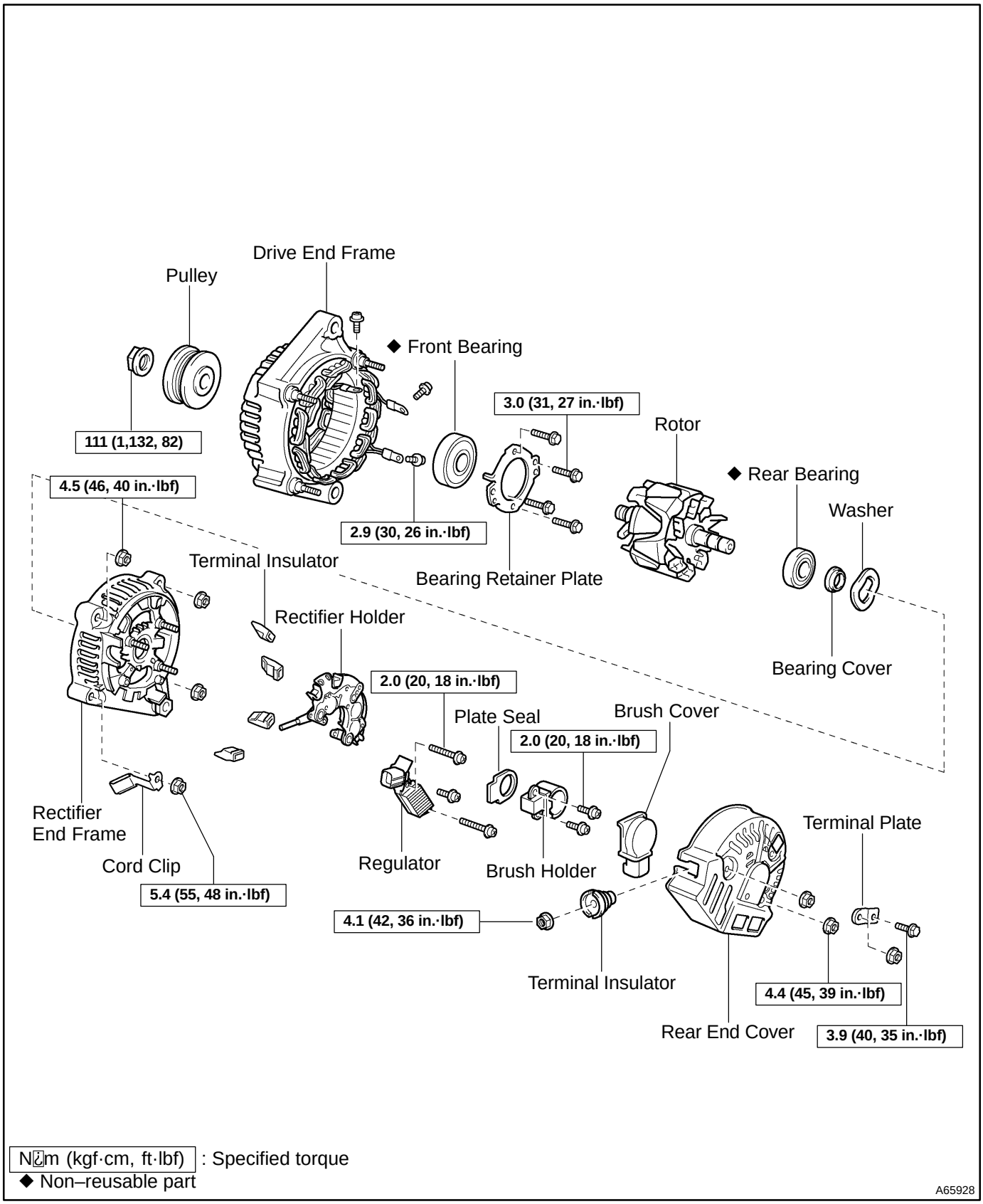

N⍿m (kgf·cm, ft·lbf) : Specified torque
◆ Non–reusable part

A65928

OVERHAUL

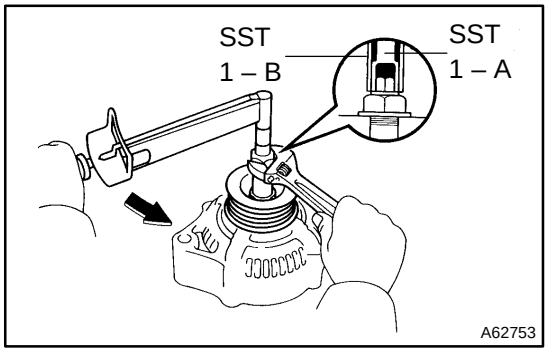

1. REMOVE GENERATOR PULLEY

SST 09820–63010 (09820–06010, 09820–06020)

HINT:

SST1 – A, B	09820–06010
SST2	09820–06020

(a) Hold SST 1 – A with a torque wrench, and tighten SST 1 – B clockwise to the specified torque.

Torque: 39 N·m (398 kgf·cm, 29 ft·lbf)

NOTICE:

Check that SST is secured to the rotor shaft.

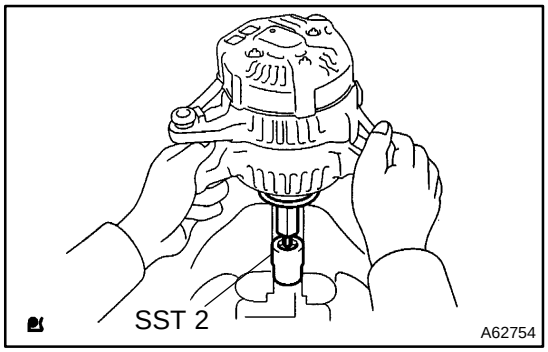

(b) Mount SST 2 in a vise.

(c) Insert SST 1 – A, B into SST 2, and attach the pulley nut to SST 2.

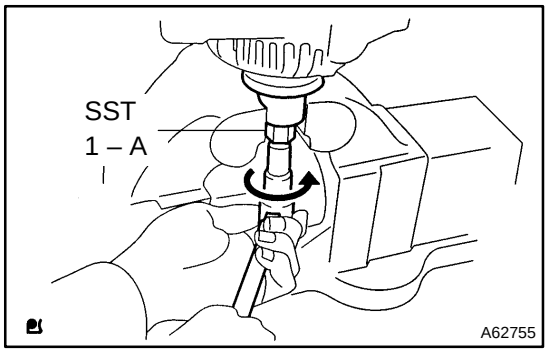

(d) To loosen the pulley nut, turn SST 1 – A in the direction shown in the illustration.

NOTICE:

To prevent damage to the rotor shaft, do not loosen the pulley nut more than one–half of a turn.

(e) Remove the alternator form SST 2.

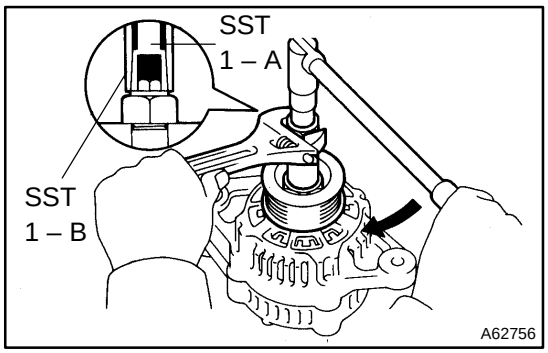

(f) Turn SST 1 – B, and remove SST 1 – A, B.

(g) Remove the pulley nut and pulley.

2. REMOVE GENERATOR BRUSH HOLDER ASSY

(a) Remove the nut and terminal insulator.
(b) Remove the screw, nut and terminal plate.
(c) Remove the 2 nuts and rear end cover.
(d) Remove the brush cover from the brush holder.
(e) Remove the 2 screw and brush holder.
(f) Remove the plate seal.

3. REMOVE GENERATOR REGULATOR ASSY

(a) Remove the 3 screws and regulator.

4. REMOVE GENERATOR HOLDER W/RECTIFIER

(a) Remove the 4 screws and holder w/ rectifier.

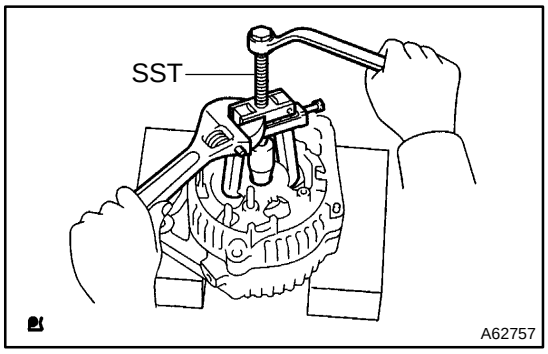

5. REMOVE GENERATOR RECTIFIER END FRAME

(a) Remove the plate seal from the rectifier end frame.
(b) Remove the 4 terminal insulator, 4 nuts and cord clip.
(c) Using SST, remove the rectifier end frame.
SST 09286–46011

6. REMOVE GENERATOR ROTOR ASSY

(a) Remove the washer from the rotor.
(b) Remove the rotor from drive end frame.

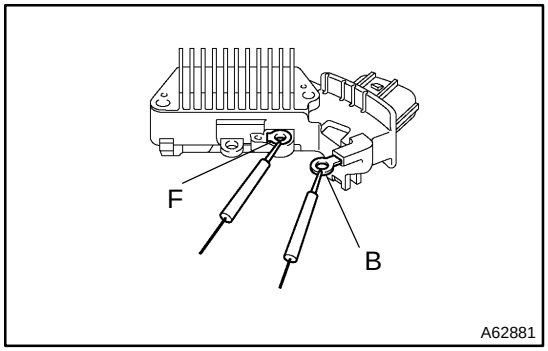

7. INSPECT GENERATOR REGULATOR ASSY

(a) Using an ohmmeter, check the continuity between terminals F and B.
Standard:
When the positive and negative poles between terminals F and B are exchanged, there is continuity in one way but no continuity in another way.

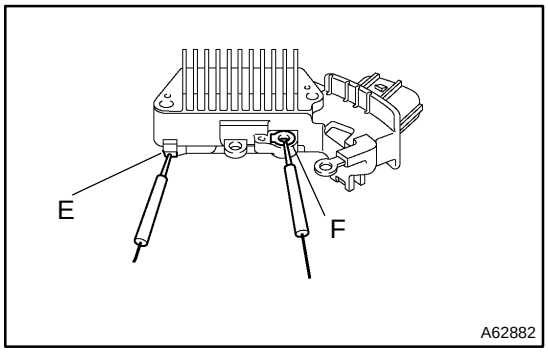

(b) Using an ohmmeter, check the continuity between terminals F and E.
Standard:
When the positive and negative poles between terminals F and E are exchanged, there is continuity in one way but no continuity in another way.

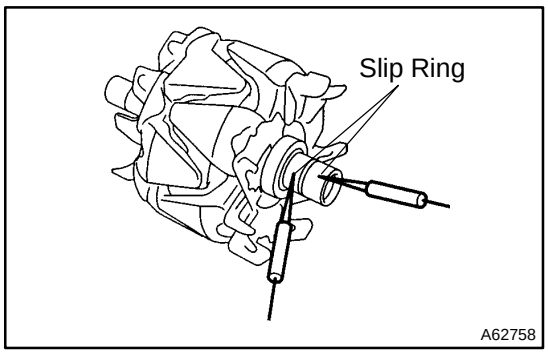

8. INSPECT GENERATOR REGULATOR ASSY

(a) Using an ohmmeter, check that there is continuity between the slip rings.
Standard resistance: 2.1 – 2.5 Ω at 20°C (68°F)

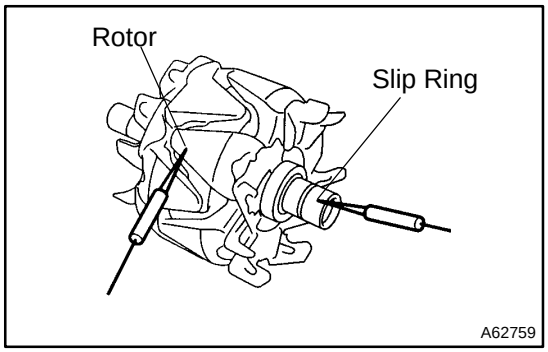

(b) Using an ohmmeter, check that there is no continuity between the slip ring and rotor.

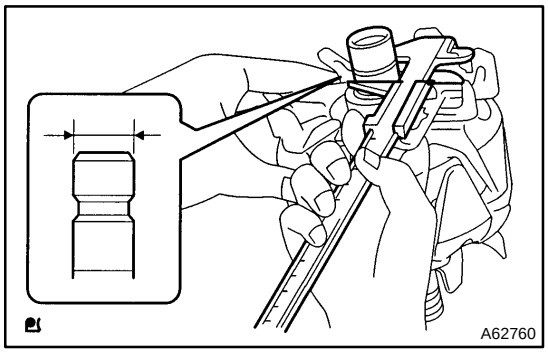

(c) Using a vernier calipers, measure the slip ring diameter.
Standard diameter: 14.2 – 14.4 mm (0.559 – 0.567 in.)
Minimum diameter: 12.8 mm (0.504 in.)

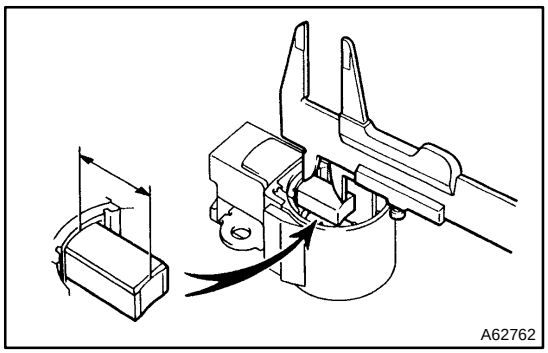

9. INSPECT BRUSH

(a) Using a vernier calipers, measure the exposed brush length.
Standard exposed length:
9.5 – 11.5 mm (0.374 – 0.453 in.)
Minimum exposed length: 1.5 mm (0.059 in.)

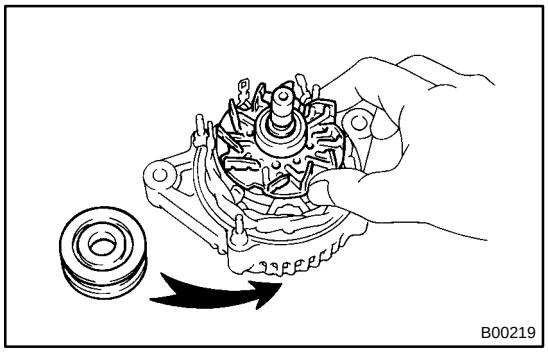

10. INSTALL GENERATOR ROTOR ASSY

(a) Install the rotor to the drive end frame.
(b) Install the washer on the rotor.

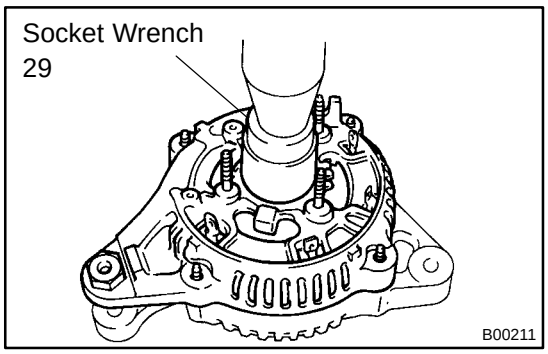

(c) Using a socket wrench 29 and press, slowly press in the rectifier end frame.

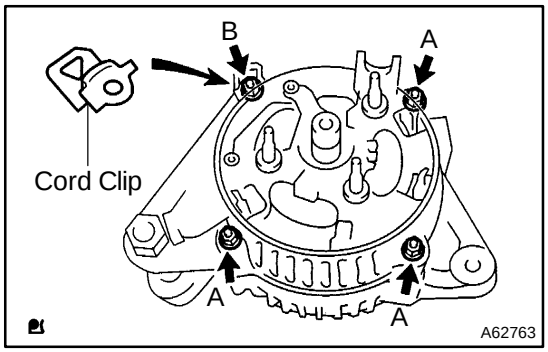

(d) Install the cord clip and 4 nuts.
Torque:
Nut A 4.5 N·m (46 kgf·cm, 40 in.·lbf)
Nut B 5.4 N·m (55 kgf·cm, 48 in.·lbf)

11. INSTALL GENERATOR HOLDER W/RECTIFIER

(a) Install the holder w/ rectifier with 4 screws.
Torque: 2.9 N·m (30 kgf·cm, 26 in.·lbf)

12. INSTALL GENERATOR REGULATOR ASSY

(a) Install the regulator with the 3 screw.
Torque: 2.0 N·m (20 kgf·cm, 18 in.·lbf)

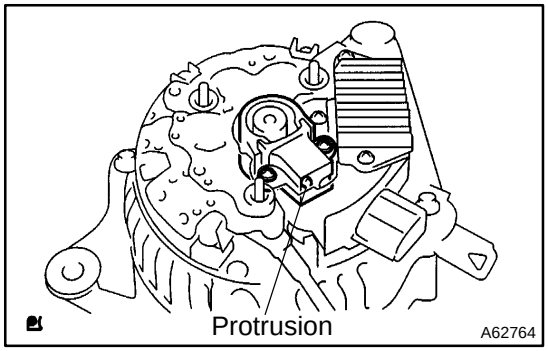

13. INSTALL GENERATOR BRUSH HOLDER ASSY

(a) Place the plate seal on the brush holder.
(b) Install the brush holder with the 2 screws.
Torque: 2.0 N·m (20 kgf·cm, 18 in.·lbf)

NOTICE:
Pay attention to the holder installation direction.

(c) Place the brush cover on the brush holder.
(d) Install the rear end cover with the 2 nuts.
Torque: 4.4 N·m (45 kgf·cm, 39 in.·lbf)
(e) Install the terminal plate with the screw and nut.
Torque:
Bolt 3.9 N·m (40 kgf·cm, 35 in.·lbf)
Nut 4.4 N·m (45 kgf·cm, 39 in.·lbf)
(f) Install the terminal insulator withe the nut.
Torque: 4.1 N·m (42 kgf·cm, 36 in.·lbf)

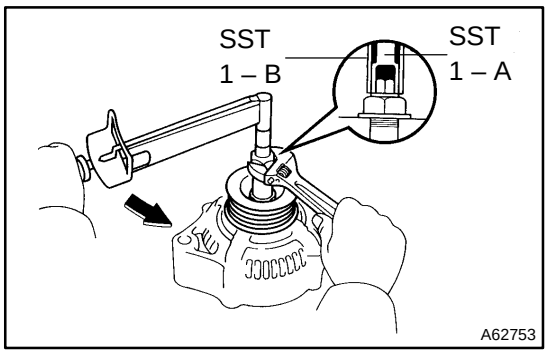

14. INSTALL GENERATOR PULLEY

SST 09820–63010 (09820–06010, 09820–06020)

HINT:

SST1 – A, B	09820–06010
SST2	09820–06020

(a) Install the pulley to the rotor shaft by tightening the pulley nut by hand.

(b) Hold SST 1 – A with a torque wrench, and tighten SST 1 – B clockwise to the specified torque.

Torque: 39 N·m (398 kgf·cm, 29 ft·lbf)

NOTICE:

Check that SST is secured to the pulley shaft.

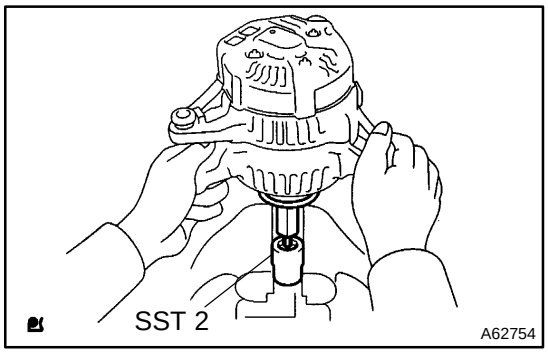

(c) Mount SST 2 in a vise.

(d) Insert SST 1 – A, B into SST 2, and attach the pulley nut to SST 2.

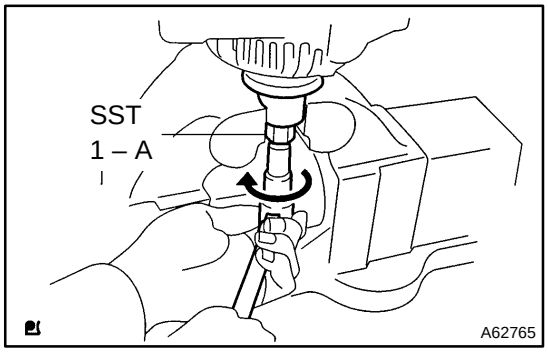

(e) Tighten the pulley nut, turn SST 1 – A in the direction shown in the illustration.

Torque: 111 N·m (1,132 kgf·cm, 82 ft·lbf)

(f) Remove the alternator form SST 2.

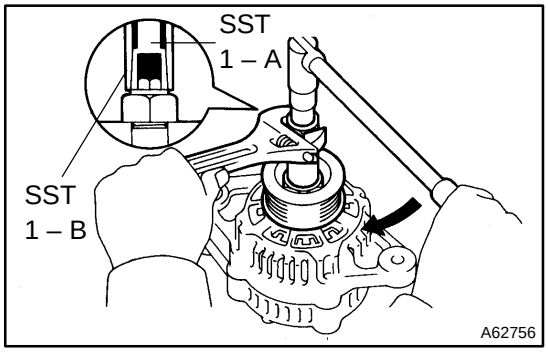

(g) Turn SST 1 – B, and remove SST 1 – A, B.

(h) Turn the pulley, and check that the pulley moves smoothly.

GENERATOR ASSY

190CA–02

REPLACEMENT

1. REMOVE ENGINE UNDER COVER RH

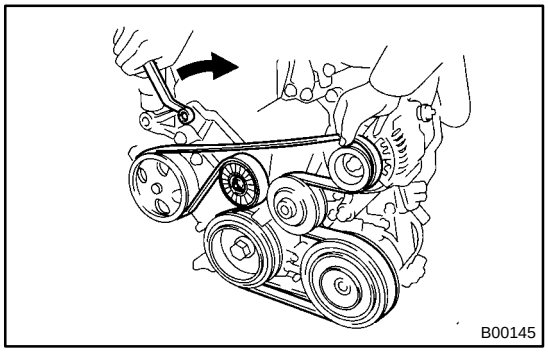

2. REMOVE FAN AND GENERATOR V BELT

(See page 14–4)

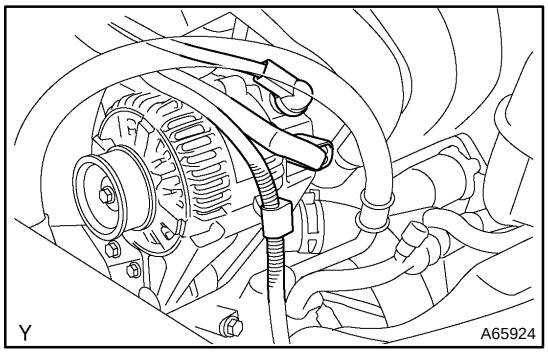

3. REMOVE GENERATOR ASSY

(a) Disconnect the wire clamp from the wire clip on the rectifire end frame.

(b) Remove the rubber cap and nut, and disconnect the alternator wire.

(c) Disconnect the alternator connector.

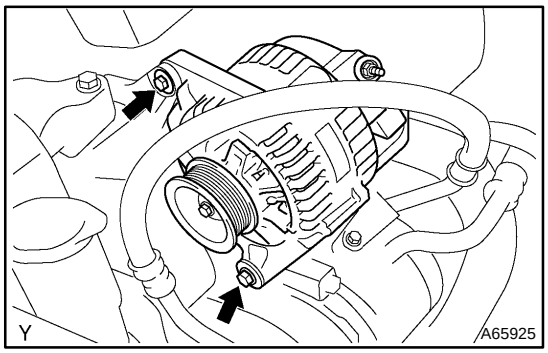

(d) Remove the 2 bolts and alternator.

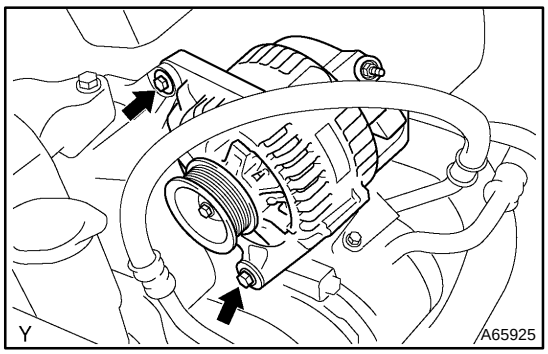

4. INSTALL GENERATOR ASSY

Torque:
12 mm head 25 N·m (250 kgf·cm, 18 ft·lbf)
14 mm head 54 N·m (550 kgf·cm, 39 ft·lbf)

FRONT WHEEL ALIGNMENT

26081–02

ADJUSTMENT

1. INSPECT TIRE(See page 28–1)

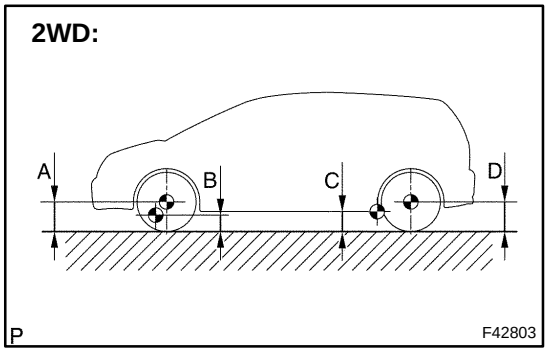

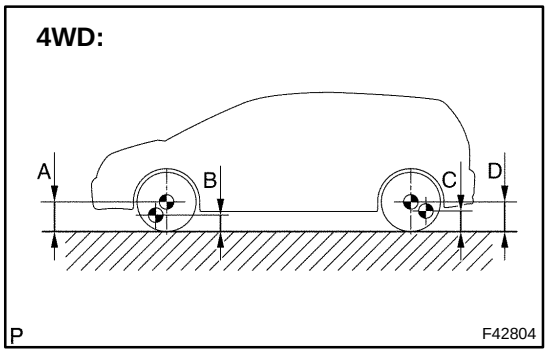

2. MEASURE VEHICLE HEIGHT

Vehicle height:

2WD:

Front	A – B: 89 mm (3.50 in.)
Rear	D – C: 41 mm (1.61 in.)

4WD:

Front	A – B: 83 mm (3.27 in.)
Rear	D – C: 38 mm (1.50 in.)

Measuring points:

A: Ground clearance of front wheel center

B: Ground clearance of lower suspension arm front bolt center

C: (2WD):

Ground clearance of axle beam set bolt center

(4WD):

Ground clearance of rear lower suspension arm rear bolt center

D: Ground clearance of rear wheel center

NOTICE:

Before inspecting the wheel alignment, adjust the vehicle height to the specified value.

If the vehicle height is not within the specified value, try to adjust it by pushing down on or lifting the body.

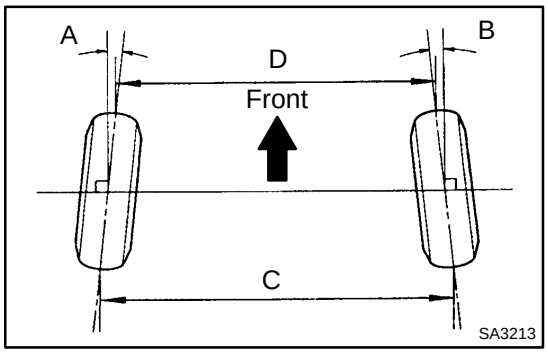

3. INSPECT TOE–IN

Toe–in:

Toe–in (total)	A + B: 0° ± 12' (0° ± 0.2°) C – D: 0 ± 2 mm (0 ± 0.08 in.)

If the toe–in is not within the specified value, adjust it at the rack ends.

4. ADJUST TOE–IN

(a) Remove the rack boot set clips.

(b) Loosen the tie rod end lock nuts.

(c) Turn the right and left rack ends by an equal amount to adjust the toe–in.

HINT:

Try to adjust the toe–in to the center of the specified value.

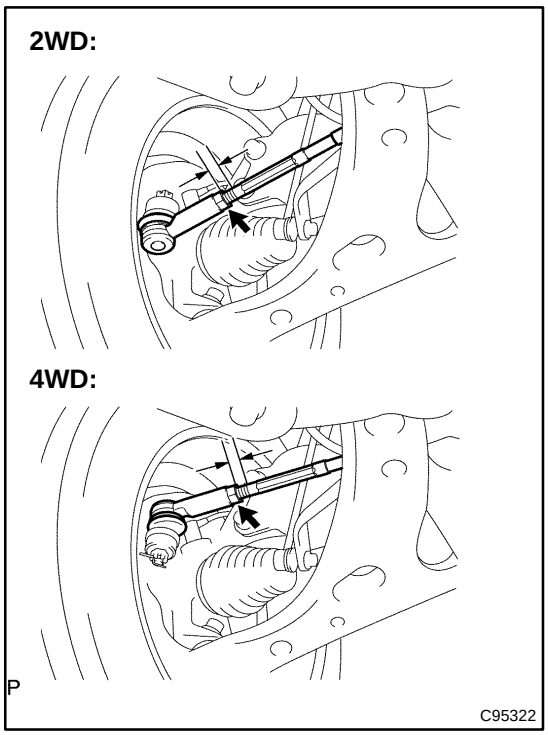

(d) Make sure that the lengths of the right and left rack ends are the same.
Rack end length difference: 1.5 mm (0.059 in.) or less
(e) Torque the tie rod end lock nuts.
Torque: 74 N·m (755 kgf·cm, 55 ft·lbf)
(f) Place the boots on the seats and install the clips.
HINT:
Make sure that the boots are not twisted.

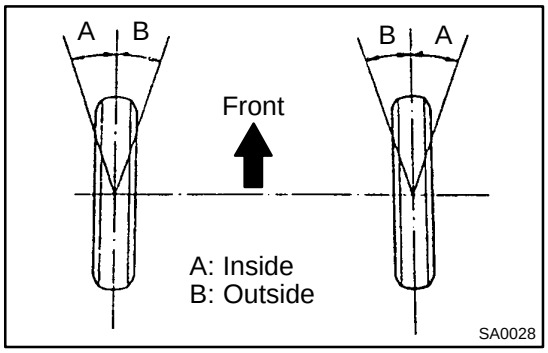

5. INSPECT WHEEL ANGLE
(a) Turn the steering wheel fully and measure the turning angle.
Wheel turning angle:
2WD:

Inside wheel	36° 40' (36.67°) ± 2°
Outside wheel: Reference	31° 53' (31.88°)

4WD:

Inside wheel	37° 03' (37.05°) ± 2°
Outside wheel: Reference	32° 02' (32.03°)

If the right and left inside wheel angles differ from the specified value, check the right and left rack end lengths.

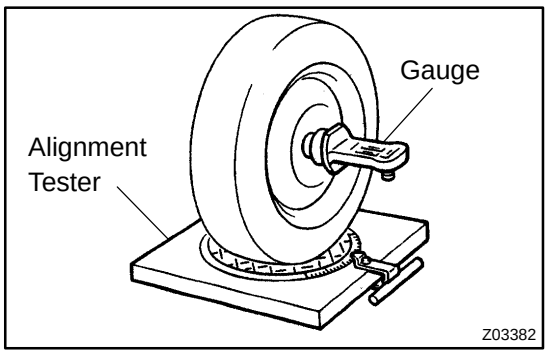

6. INSPECT CAMBER, CASTER AND STEERING AXIS INCLINATION
(a) Install the camber–caster–kingpin gauge or position vehicle on wheel alignment tester.
(b) Inspect the camber, caster and steering axis inclination.
Camber, caster and steering axis inclination:
2WD

Camber	–0°34' ± 45' (–0.57° ± 0.75°)
Right–left error	45' (0.75°) or less
Caster	2°47' ± 45' (2.78° ± 0.75°)
Right–left error	45' (0.75°) or less
Steering axis inclination	12°28' ± 45' (12.47° ± 0.75°)
Right–left error	45' (0.75°) or less

4WD

Camber	–0°29' ± 45' (–0.48° ± 0.75°)
Right–left error	45' (0.75°) or less
Caster	2°46' ± 45' (2.77° ± 0.75°)
Right–left error	45' (0.75°) or less
Steering axis inclination	12°13' ± 45' (12.22° ± 0.75°)
Right–left error	45' (0.75°) or less

If the caster and steering axis inclination are not within the specified values, after the camber has been correctly adjusted, recheck the suspension parts for damaged and/or worn out parts.

7. ADJUST CAMBER

NOTICE:

After the camber has been adjusted, inspect the toe–in.

(a) Remove the front wheel.

(b) Remove the 2 nuts on the lower side of the shock absorber assy front LH.

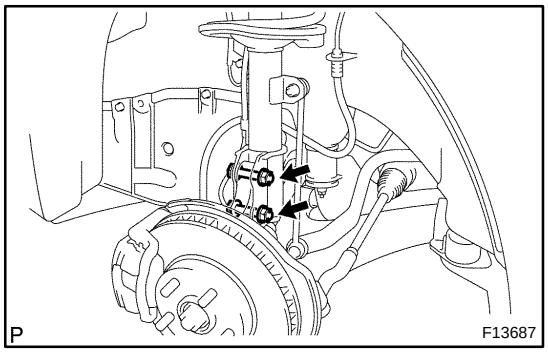

NOTICE:

When removing nut, stop the bolt from rotating and loosen the nut.

(c) Clean the installation surfaces of the shock absorber assy front LH and the steering knuckle.

(d) Temporarily install the 2 nuts.

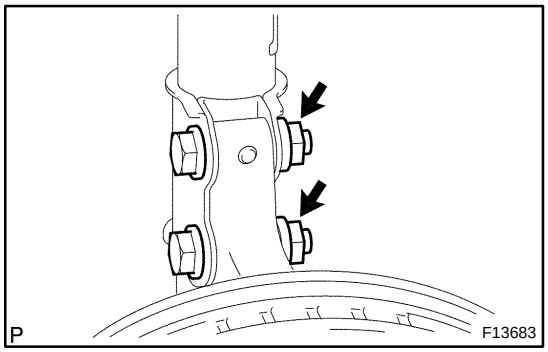

(e) Adjust the camber by pushing or pulling the lower side of the shock absorber in the direction in which the camber adjustment is required.

(f) Tighten the nuts.
Torque: 220 N·m (2,243 kgf·cm, 162 ft·lbf)

(g) Install the front wheel.
Torque: 103 N·m (1,050 kgf·cm, 76 ft·lbf)

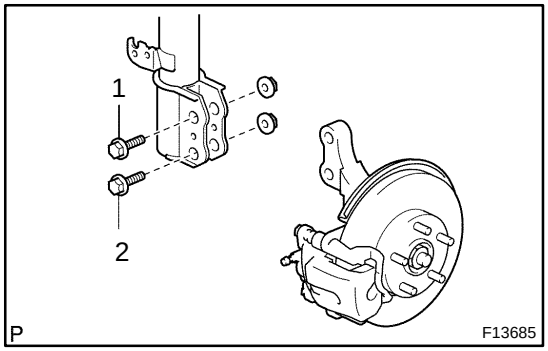

(h) Check the camber.

HINT:

- Try to adjust the camber to the center of the specified value.
- Adjusting value for the set bolts is –1°30' – 0°30' (–1.5° – 0.5°).

If the camber is not within the specified value, using the following table, estimate how much additional camber adjustment will be required, and select the camber adjusting bolt.

Bolt / Adjusting Value	Set Bolt		Adjusting Bolt					
	90105–17001		90105–17003		90105–17004		90105–17005	
	11		1 Dot •11		2 Dots •11		3 Dots •11	
	1	2	1	2	1	2	1	2
–1˚30’ – –1˚15’							●	●
–1˚15’ – –1˚00’					●			●
–1˚00’ – –45’			●					●
–45’ – –30’	●							●
–30’ – –15’	●					●		
–15’ – 0’	●			●				
0’ – 15’	●			●				
15’ – 30’	●					●		
30’ – 45’	●							●
45’ – 1˚00’			●					●
1˚00’ – 1˚15’					●			●
1˚15’ – 1˚30’							●	●

N

F12938

(i) Perform the steps mentioned above again. At step (e), replace 1 or 2 selected bolts.

HINT:

When replacing the 2 bolts, replace 1 bolt at a time.

FRONT SUSPENSION

COMPONENTS

26082–02

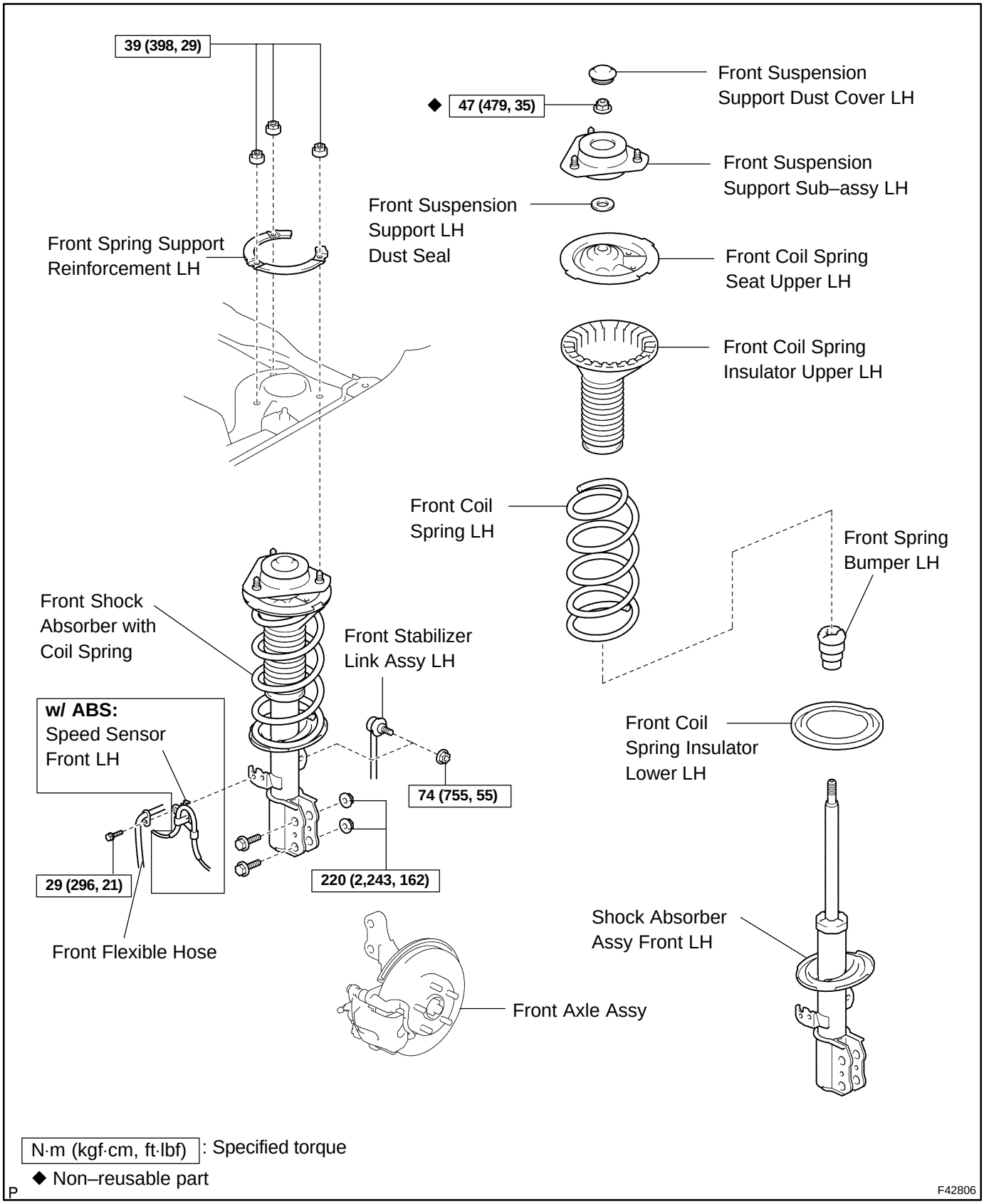

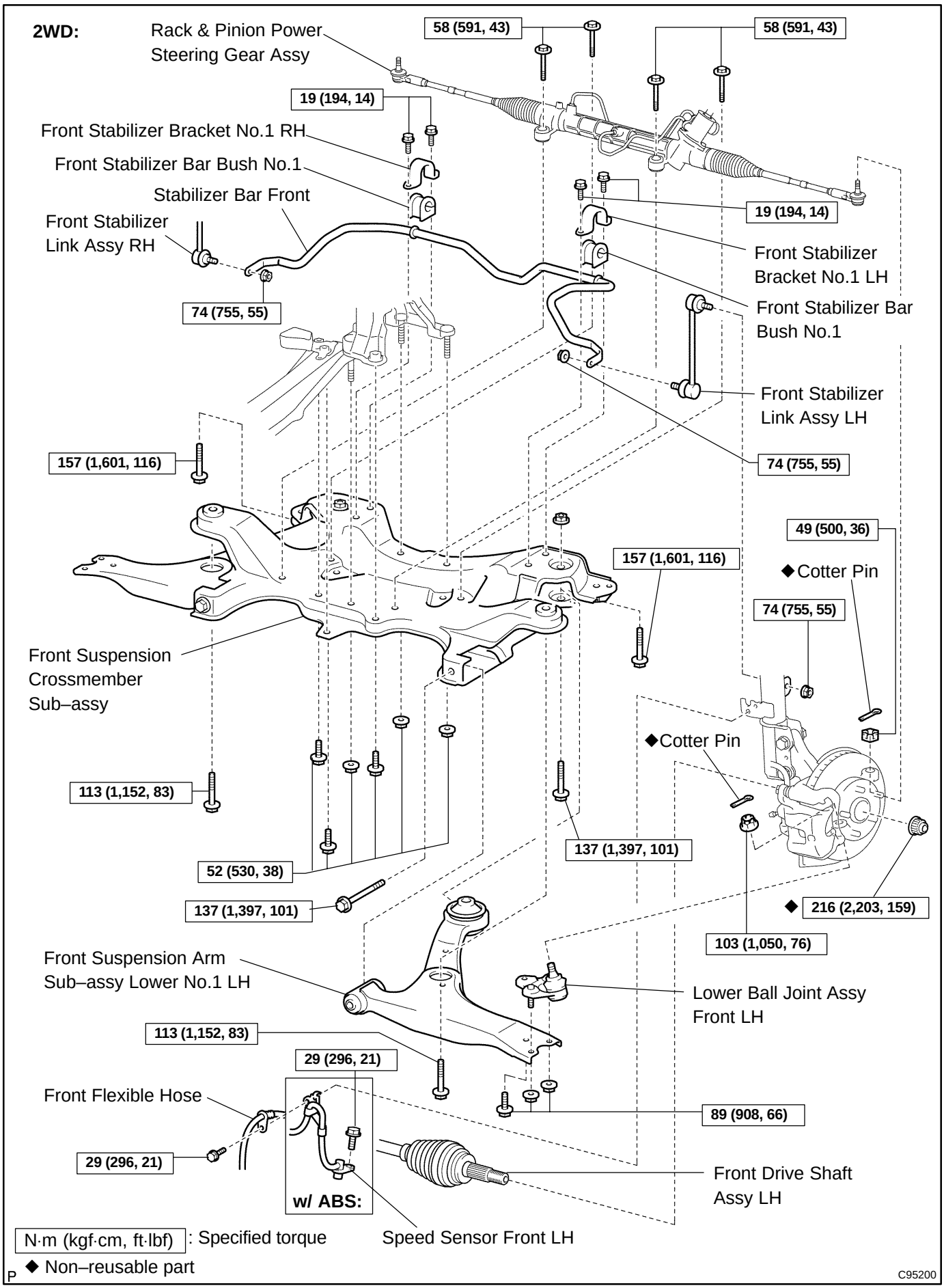
2WD:
Rack & Pinion Power Steering Gear Assy
58 (591, 43)
58 (591, 43)
19 (194, 14)
Front Stabilizer Bracket No.1 RH
Front Stabilizer Bar Bush No.1
Stabilizer Bar Front
19 (194, 14)
Front Stabilizer Link Assy RH
Front Stabilizer Bracket No.1 LH
Front Stabilizer Bar Bush No.1
74 (755, 55)
Front Stabilizer Link Assy LH
157 (1,601, 116)
74 (755, 55)
49 (500, 36)
157 (1,601, 116)
◆Cotter Pin
74 (755, 55)
Front Suspension Crossmember Sub–assy
◆Cotter Pin
113 (1,152, 83)
137 (1,397, 101)
52 (530, 38)
137 (1,397, 101)
◆ 216 (2,203, 159)
103 (1,050, 76)
Front Suspension Arm Sub–assy Lower No.1 LH
Lower Ball Joint Assy Front LH
113 (1,152, 83)
29 (296, 21)
Front Flexible Hose
89 (908, 66)
29 (296, 21)
w/ ABS:
Front Drive Shaft Assy LH
Speed Sensor Front LH
N·m (kgf·cm, ft·lbf): Specified torque
◆ Non–reusable part
C95200

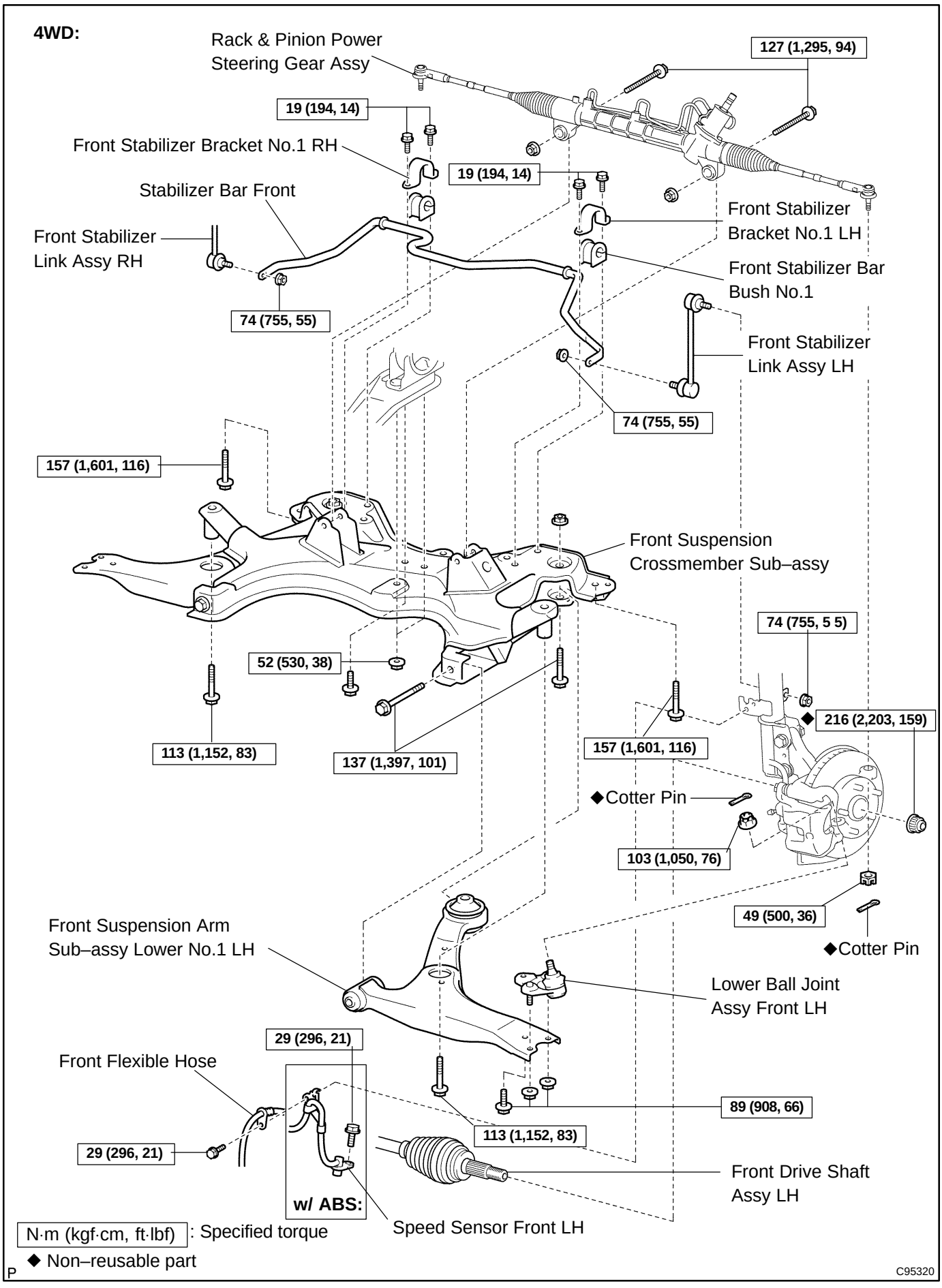
4WD:
Rack & Pinion Power Steering Gear Assy
127 (1,295, 94)
19 (194, 14)
Front Stabilizer Bracket No.1 RH
19 (194, 14)
Stabilizer Bar Front
Front Stabilizer Bracket No.1 LH
Front Stabilizer Link Assy RH
Front Stabilizer Bar Bush No.1
74 (755, 55)
Front Stabilizer Link Assy LH
74 (755, 55)
157 (1,601, 116)
Front Suspension Crossmember Sub–assy
74 (755, 5 5)
52 (530, 38)
◆ 216 (2,203, 159)
113 (1,152, 83)
137 (1,397, 101)
157 (1,601, 116)
◆Cotter Pin
103 (1,050, 76)
49 (500, 36)
◆Cotter Pin
Front Suspension Arm Sub–assy Lower No.1 LH
Lower Ball Joint Assy Front LH
29 (296, 21)
Front Flexible Hose
89 (908, 66)
113 (1,152, 83)
29 (296, 21)
Front Drive Shaft Assy LH
w/ ABS:
Speed Sensor Front LH
N·m (kgf·cm, ft·lbf): Specified torque
◆ Non–reusable part
C95320

FRONT SUSPENSION ARM SUB–ASSY LOWER NO.1 LH

26083–02

REPLACEMENT

HINT:

COMPONENTS: See page 26–3

1. REMOVE FRONT WHEEL

2. DISCONNECT FRONT STABILIZER LINK ASSY LH (LH (A/T) POSITION)(See page 26–10)

3. DISCONNECT FRONT STABILIZER LINK ASSY RH (LH (A/T) POSITION)

HINT:

Remove the RH side by the same procedures as the LH side.

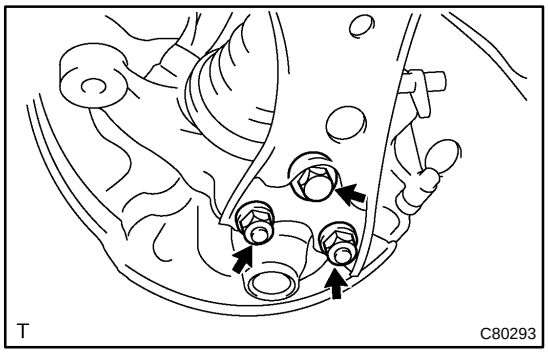

4. SEPARATE FRONT SUSPENSION ARM SUB–ASSY LOWER NO.1 LH

(a) Remove the bolt and 2 nuts, and separate the front suspension arm sub–assy lower No.1 LH from the lower ball joint assy front LH.

5. SEPARATE FRONT SUSPENSION ARM SUB–ASSY LOWER NO.1 RH (LH (A/T) POSITION)

HINT:

Remove the RH side by the same procedures as the LH side.

6. SEPARATE RACK & PINION POWER STEERING GEAR ASSY (LH (A/T) POSITION)

(a) 2WD:

Remove the 4 bolts, separate the rack & pinion power steering gear assy.

(b) 4WD:

Remove the 2 bolts and 2 nuts, separate the rack & pinion power steering gear assy.

NOTICE:

Loosen the bolt since the nut cannot be rotated.

(c) Suspend the rack & pinion power steering gear assy.

7. SUSPEND ENGINE ASSY (LH (A/T) POSITION)

(a) 1ZZ–FE: See page 40–12

(b) 2ZZ–GE: See page 40–25

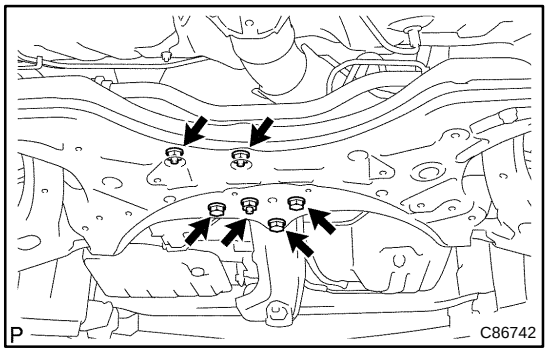

8. SEPARATE FRONT SUSPENSION CROSSMEMBER SUB–ASSY (LH (A/T) POSITION)

(a) 2WD:

Remove the 3 bolts and 3 nuts, disconnect the transverse engine engine mounting insulator and engine mounting member sub–assy center from the front suspension crossmember sub–assy.

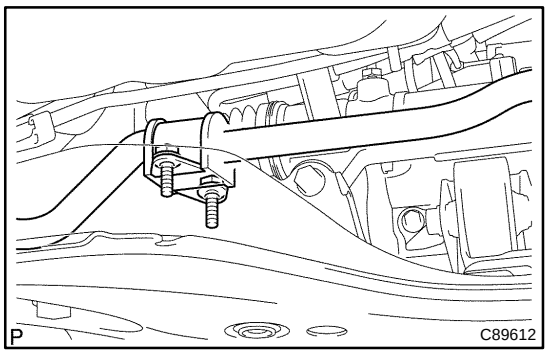

(b) 4WD:
Remove the 4 bolts, disconnect the stabilizer bar front from the front suspension crossmember sub–assy.

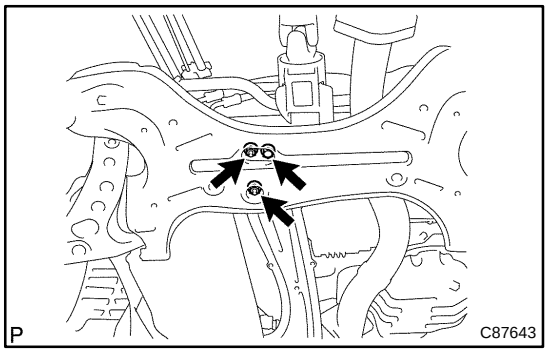

(c) 4WD:
Remove the bolt and 2 nuts, disconnect the transverse engine engine mounting insulator and engine mounting member sub–assy center from the front suspension crossmember sub–assy.

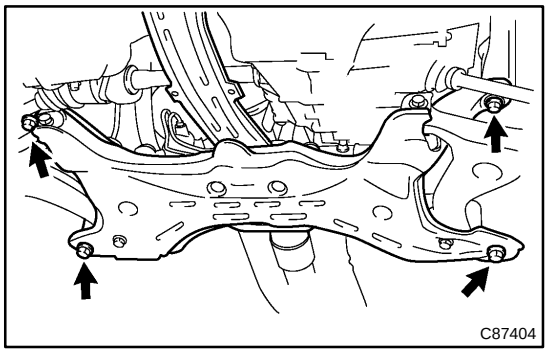

(d) Remove the 4 bolts.
(e) Lower the transmission jack, remove the front suspension crossmember sub–assy.

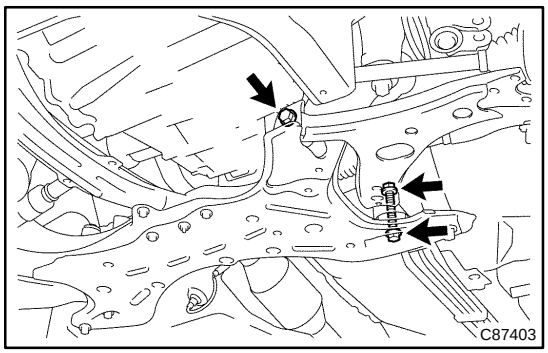

9. REMOVE FRONT SUSPENSION ARM SUB–ASSY LOWER NO.1 LH

(a) Remove the 2 bolts, nut and front suspension arm sub–assy lower No.1 LH from the front suspension crossmember sub–assy.

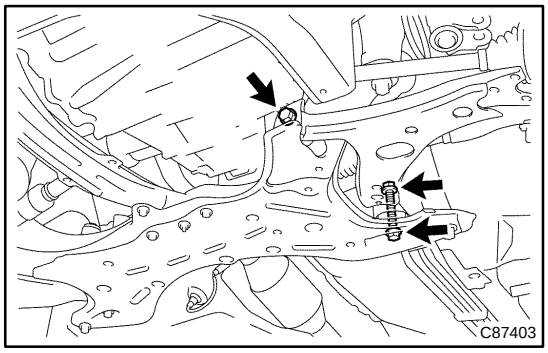

10. TEMPORARY TIGHTEN FRONT SUSPENSION ARM SUB–ASSY LOWER NO.1 LH

(a) Install the front suspension arm sub–assy lower No. 1 LH, temporarily tighten the 2 bolts and nut.

11. INSTALL FRONT SUSPENSION CROSSMEMBER SUB–ASSY (LH (A/T) POSITION)

(a) Lift the front suspension crossmember sub–assy up with a transmission jack.

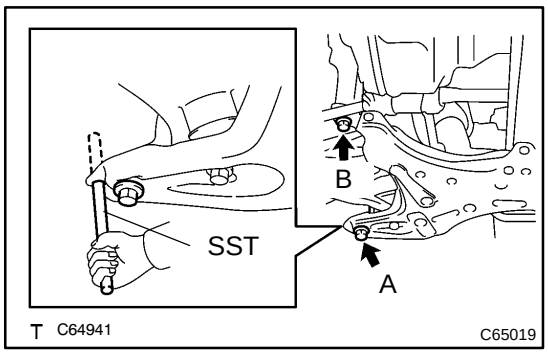

(b) Insert SST to the base hole of the RH side crossmember and RH side of the vehicle.
SST 09670–00010

(c) Tighten the bolt temporarily in the order A and B.

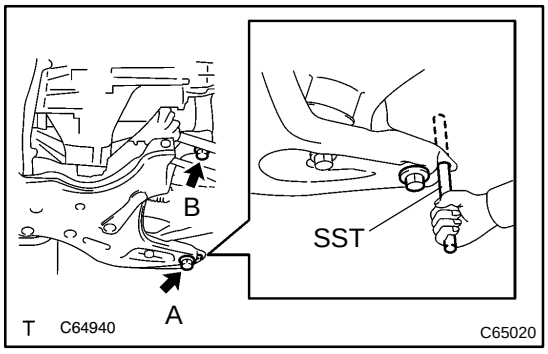

(d) Insert SST to the base hole of the LH side of crossmember and LH side of the vehicle.
SST 09670–00010

(e) Tighten the bolt temporarily in the order A and B.

(f) Insert SST to the base hole of the RH side of crossmember and RH side of the vehicle.
SST 09670–00010

(g) Then tighten the bolt A and B by the specified torque.
Torque:
Bolt A: 157 N·m (1,601 kgf·cm, 116 ft·lbf)
Bolt B: 113 N·m (1,152 kgf·cm, 83 ft·lbf)

(h) Insert SST to the base hole of the LH side of crossmember and LH side of the vehicle.
SST 09670–00010

(i) Tighten the bolt A and B by the specified torque.
Torque:
Bolt A: 157 N·m (1,601 kgf·cm, 116 ft·lbf)
Bolt B: 113 N·m (1,152 kgf·cm, 83 ft·lbf)

(j) Connect the transverse engine engine mounting insulator and engine mounting member sub–assy center to the front suspension crossmember sub–assy.

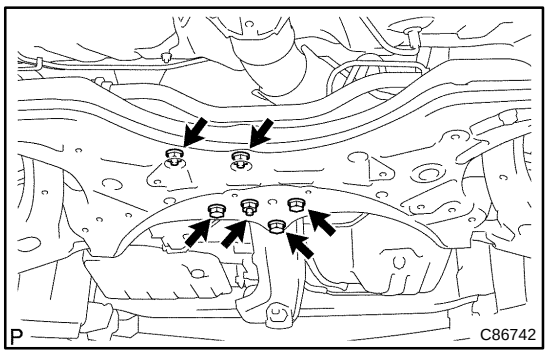

(k) 2WD:
Install the 3 bolts and 3 nuts.
Torque: 52 N·m (530 kgf·cm, 38 ft·lbf)

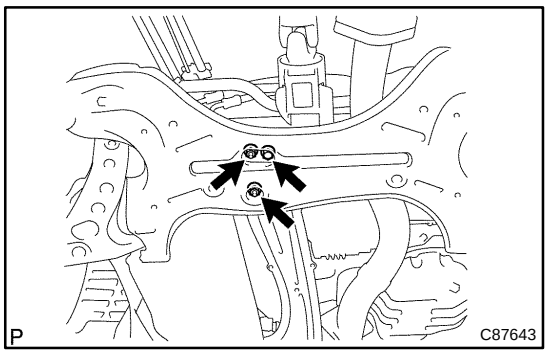

(l) 4WD:
Install the bolt and 2 nuts.
Torque: 52 N·m (530 kgf·cm, 38 ft·lbf)

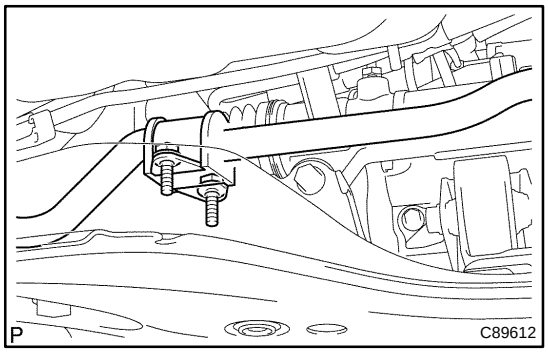

(m) 4WD:
Install the stabilizer bar front and 4 bolts to the front suspension crossmember sub–assy.
Torque: 19 N·m (194 kgf·cm, 14 ft·lbf)

12. INSTALL RACK & PINION POWER STEERING GEAR ASSY (LH (A/T) POSITION)

(a) 2WD:
Install the rack & pinion power steering gear assy with the 4 bolts.
Torque: 58 N·m (591 kgf·cm, 43 ft·lbf)

(b) 4WD:
Install the rack & pinion power steering gear assy with the 2 bolts and 2 nuts.
Torque:127 N·m (1,295 kgf·cm, 94 ft·lbf)

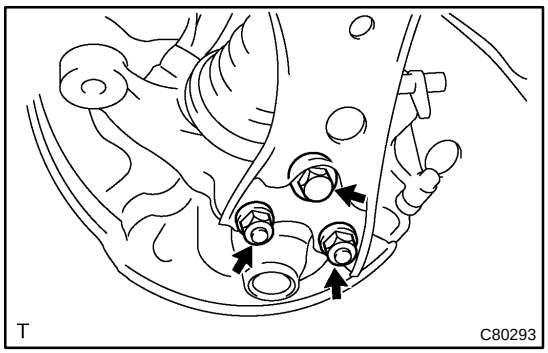

13. INSTALL FRONT SUSPENSION ARM SUB–ASSY LOWER NO.1 LH

(a) Install the front suspension arm sub–assy lower No.1 LH with the 2 nuts and bolt to the lower ball joint assy front LH.
Torque: 89 N·m (908 kgf·cm, 66 ft·lbf)

14. INSTALL FRONT SUSPENSION ARM SUB–ASSY LOWER NO.1 RH (LH (A/T) POSITION)

HINT:
Install the RH side by the same procedures as the LH side.

15. INSTALL FRONT STABILIZER LINK ASSY LH (LH (A/T) POSITION)(See page 26–10)

16. INSTALL FRONT STABILIZER LINK ASSY RH (LH (A/T) POSITION)

HINT:
Install the RH side by the same procedure as the LH side.

17. STABILIZE SUSPENSION

(a) Install the front wheel and jack down the vehicle.
Torque: 103 N·m (1,050 kgf·cm, 76 ft·lbf)

(b) Bounce the vehicle up and down several times to stabilize the suspension.

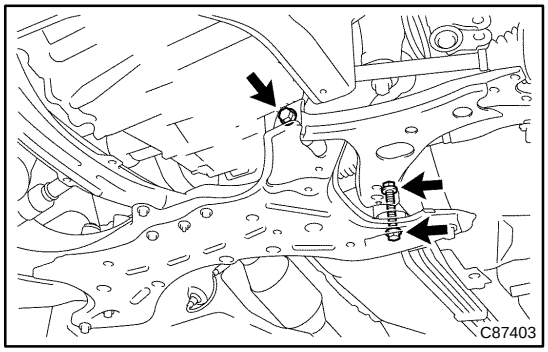

18. FULLY TIGHTEN FRONT SUSPENSION ARM SUB–ASSY LOWER NO.1 LH

(a) Fully tighten the 2 bolts and nut.
Torque: 137 N·m (1,397 kgf·cm, 101 ft·lbf)

NOTICE:
Tighten the bolt since the nut cannot be rotated.

19. INSPECT AND ADJUST FRONT WHEEL ALIGNMENT(See page 26–6)

LOWER BALL JOINT ASSY FRONT LH

2607Y–03

REPLACEMENT

HINT:

COMPONENTS: See page 26–3.

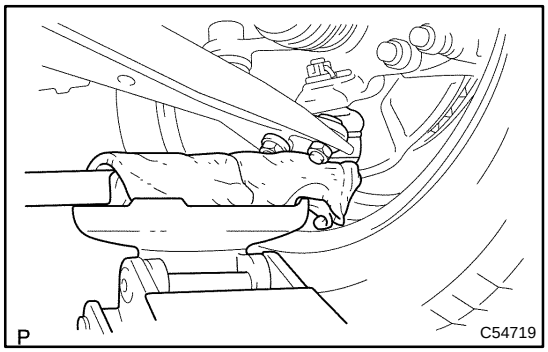

1. INSPECT LOWER BALL JOINT ASSY FRONT LH

(a) Jack up front side of the vehicle.

(b) Check the rattle of the lower ball joint assy front LH.

2. REMOVE FRONT WHEEL

3. REMOVE FRONT AXLE HUB LH NUT(See page 30–15 or 30–32)

SST 09930–00010

4. DISCONNECT SPEED SENSOR FRONT LH (W/ ABS)(See page 30–15 or 30–32)

5. SEPARATE TIE ROD END SUB–ASSY LH(See page 30–15 or 30–32)

SST 09628–62011

6. SEPARATE FRONT SUSPENSION ARM SUB–ASSY LOWER NO.1 LH(See page 30–15 or 30–32)

7. SEPARATE FRONT AXLE ASSY LH(See page 30–15 or 30–32)

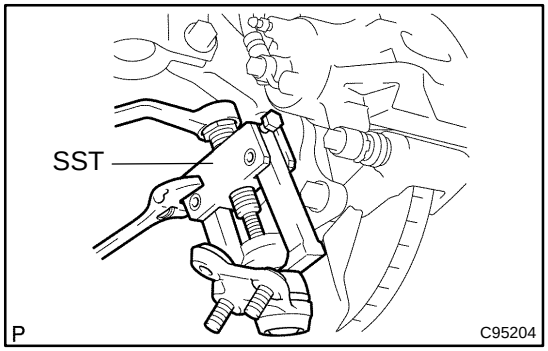

8. REMOVE LOWER BALL JOINT ASSY FRONT LH

(a) Remove the cotter pin and castle nut.

(b) Using SST, remove the lower ball joint assy from the steering knuckle LH.

SST 09628–62011

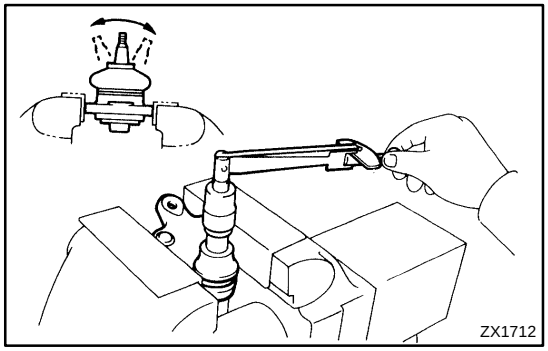

9. INSPECT LOWER BALL JOINT ASSY FRONT LH

(a) As shown in the illustration, flip the ball joint stud back and forth 5 times, before installing the nut.

(b) Using a torque wrench, turn the nut continuously at a rate of 3 – 5 seconds per 1 turn and take the torque reading on the 5th turn.

Turning torque:

0.98 – 4.9 N·m (10 – 50 kgf·cm, 8.7 – 43 in.·lbf)

10. INSTALL LOWER BALL JOINT ASSY FRONT LH

(a) Install the lower ball joint assy front LH to the steering knuckle LH, tighten the castle nut.
Torque: 103 N·m (1050 kgf·cm, 76 ft·lbf)

(b) Install a new cotter pin.

11. INSTALL FRONT AXLE ASSY LH(See page 30–15 or 30–32)

12. INSTALL FRONT SUSPENSION ARM SUB–ASSY LOWER NO.1 LH(See page 30–15 or 30–32)

13. INSTALL TIE ROD END SUB–ASSY LH(See page 30–15 or 30–32)

14. INSTALL SPEED SENSOR FRONT LH (W/ ABS)(See page 30–15 or 30–32)

15. INSTALL FRONT AXLE HUB LH NUT(See page 30–15 or 30–32)
SST 09931–00020

16. INSTALL FRONT WHEEL
Torque: 103 N·m (1,050 kgf·cm, 76 ft·lbf)

17. INSPECT AND ADJUST FRONT WHEEL ALIGNMENT(See page 26–6)

18. CHECK ABS SPEED SENSOR SIGNAL (W/ ABS)(See page 05–316)

STABILIZER BAR FRONT

2608H–01

REPLACEMENT

HINT:

COMPONENTS: See page 26–3

1. REMOVE FRONT WHEEL

2. REMOVE FRONT STABILIZER LINK ASSY LH

(a) Remove the 2 nuts and stabilizer bar link.

HINT:

If the ball joint turns together with the nut, use a hexagon wrench (6 mm) to hold the stud.

3. REMOVE FRONT STABILIZER LINK ASSY RH

HINT:

Remove the RH side by the same procedure as the LH side.

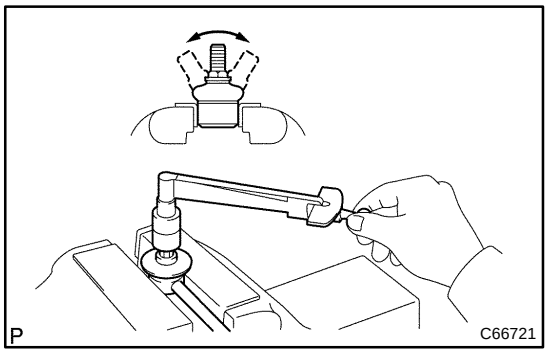

4. INSPECT FRONT STABILIZER LINK ASSY

(a) As shown in the illustration, flip the ball joint stud back and forth 5 times, before installing the nut.

(b) Using a torque wrench, turn the nut continuously at a rate of 2 – 4 seconds per 1 turn and take the torque reading on the 5th turn.

Turning torque:

0.05 – 1.96 N·m (0.5 – 20 kgf·cm, 0.4 – 17 in.·lbf)

5. SEPARATE FRONT SUSPENSION ARM SUB–ASSY LOWER NO.1 LH(See page 26–15)

6. SEPARATE FRONT SUSPENSION ARM SUB–ASSY LOWER NO.1 RH

HINT:

Remove the RH side by the same procedure as the LH side.

7. SEPARATE RACK & PINION POWER STEERING GEAR ASSY(See page 26–15)

8. SUSPEND ENGINE ASSY

(a) 1ZZ–FE: See page 40–12

(b) 2ZZ–GE: See page 40–25

9. SEPARATE FRONT SUSPENSION CROSSMEMBER SUB–ASSY(See page 26–15)

10. REMOVE STABILIZER BAR FRONT

(a) 2WD:

Remove the 4 bolts,front stabilizer bracket No.1 LH, front stabilizer bracket No.1 RH, 2 front stabilizer bar bushes No.1 and stabilizer bar front from the front suspension crossmember sub–assy.

(b) 4WD:

Remove the front stabilizer bracket No.1 LH, front stabilizer bracket No.1 RH, 2 front stabilizer bar bushes No.1 and stabilizer bar front from the front suspension crossmember sub–assy.

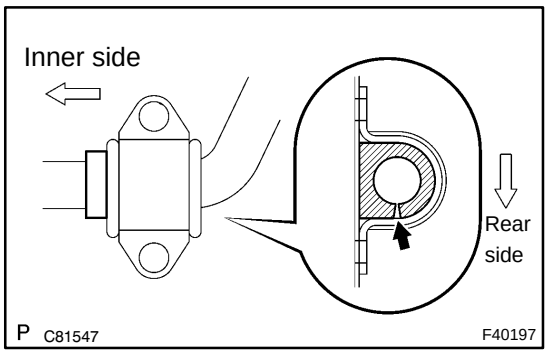

11. INSTALL STABILIZER BAR FRONT

(a) Install 2 front stabilizer bar bushes No.1, front stabilizer bracket No.1 LH and front stabilizer bracket No.1 RH to the stabilizer bar front.

HINT:

Install the bushing to the inner side of the bushing stopper on the stabilizer bar.

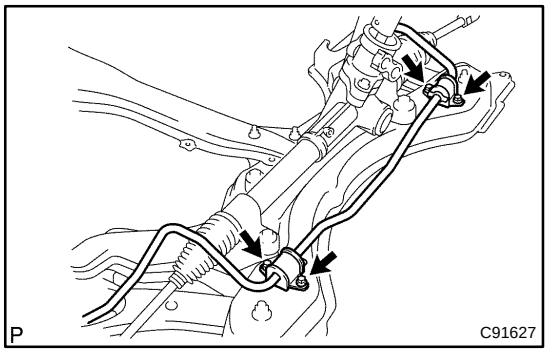

(b) 2WD:

Install the stabilizer bar front and 4 bolts to the front suspension crossmember sub–assy.

Torque: 19 N·m (194 kgf·cm, 14 ft·lbf)

12. INSTALL FRONT SUSPENSION CROSSMEMBER SUB–ASSY(See page 26–15)

SST 09670–00010

13. INSTALL RACK & PINION POWER STEERING GEAR ASSY(See page 26–15)

14. INSTALL FRONT SUSPENSION ARM SUB–ASSY LOWER NO.1 LH(See page 26–15)

15. INSTALL FRONT SUSPENSION ARM SUB–ASSY LOWER NO.1 RH

HINT:

Install the RH side by the same procedures as the LH side.

16. INSTALL FRONT STABILIZER LINK ASSY LH

(a) Install the stabilizer bar link with the 2 nuts.

Torque: 74 N·m (755 kgf·cm, 55 ft·lbf)

HINT:

If the ball joint turns together with the nut, use a hexagon wrench (6 mm) to hold the stud.

17. INSTALL FRONT STABILIZER LINK ASSY RH

HINT:

Install the RH side by the same procedure as the LH side.

18. INSTALL FRONT WHEEL

Torque: 103 N·m (1,050 kgf·cm, 76 ft·lbf)

19. INSPECT AND ADJUST FRONT WHEEL ALIGNMENT(See page 26–6)

2607S–03

REPAIR

HINT:

This is a flow chart for vehicle pull.

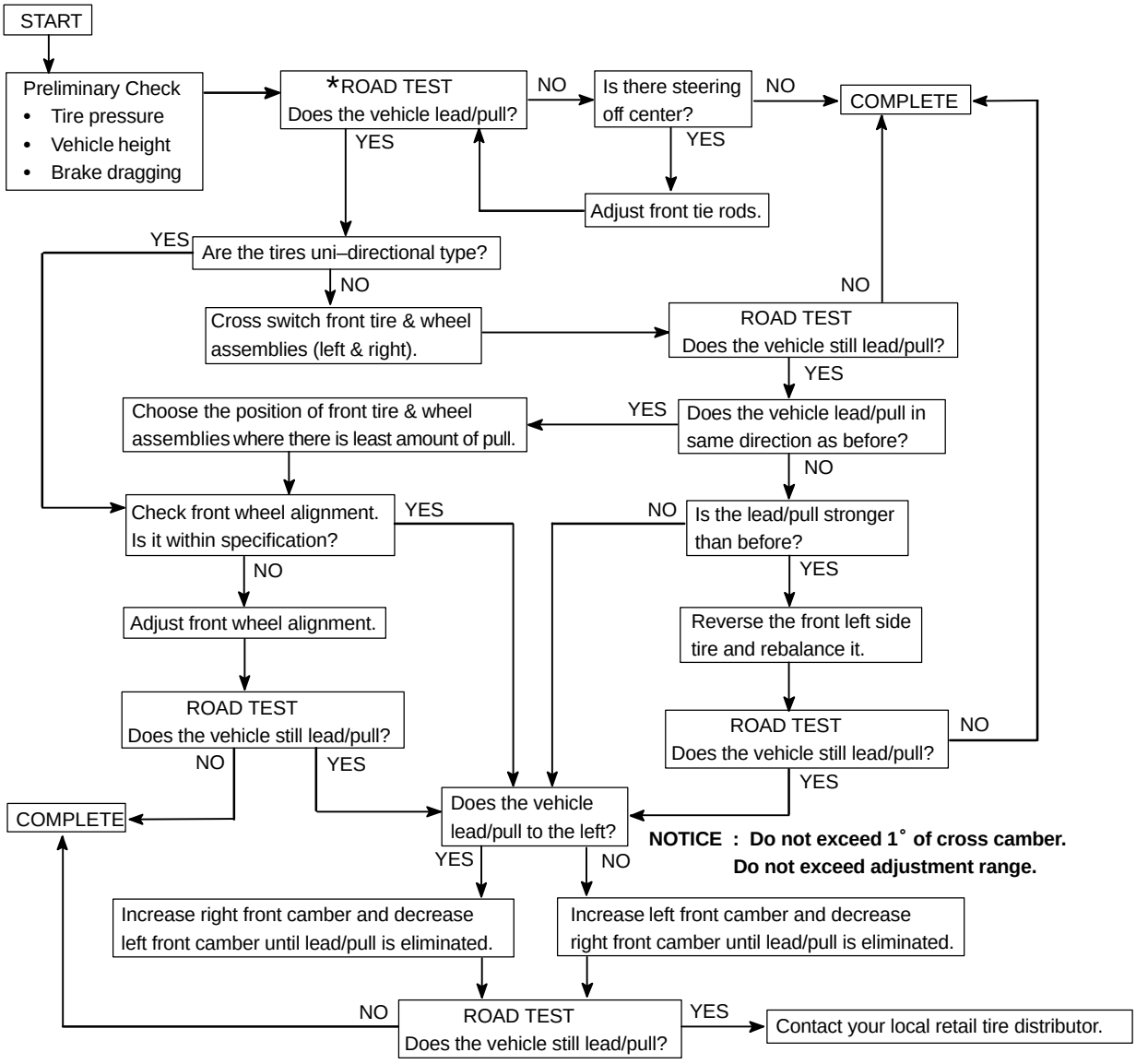

Select a flat road where the vehicle can be driven in a straight line for 100 meters at a constant speed of 35mph. Please confirm safety and set the steering wheel to its straight position. Drive the vehicle in a straight line for 100 meters at a constant speed of 35 mph without holding the steering wheel.

(1) The vehicle can keep straight but the steering wheel has some angle.
→ STEERING OFF CENTER (See page 50–4)

(2) The vehicle cannot keep straight. → STEERING PULL

FRONT SUSPENSION SYSTEM

2607R–03

PROBLEM SYMPTOMS TABLE

Use the table below to help you find the cause of the problem. The numbers indicate the priority of the likely cause of the problem. Check each part in order. If necessary, replace these parts.

Symptom	Suspect Area	See page
Bottoming	1. Vehicle (Overloaded)	–
	2. Spring (Weak)	26–10
	3. Shock absorber (Worn)	26–10
Sways/pitches	1. Tire (Worn or improperly inflated)	28–1
	2. Stabilizer bar (Bent or broken)	26–22
	3. Shock absorber (Worn)	26–10
Front wheel shimmy	1. Tire (Worn or improperly inflated)	28–1
	2. Wheel (Out of balance)	28–1
	3. Shock absorber (Worn)	26–10
	4. Wheel alignment (Incorrect)	26–6 27–6 27–7
	5. Ball joint (Worn)	26–20
	6. Hub bearing (Worn)	30–3
	7. Steering linkage (Loose or worn)	–
Abnormal tire wear	1. Tire (Worn or improperly inflated)	28–1
	2. Wheel alignment (Incorrect)	26–6 27–6 27–7
	3. Shock absorber (Worn)	26–10
	4. Suspension parts (Worn)	–

2607W–03

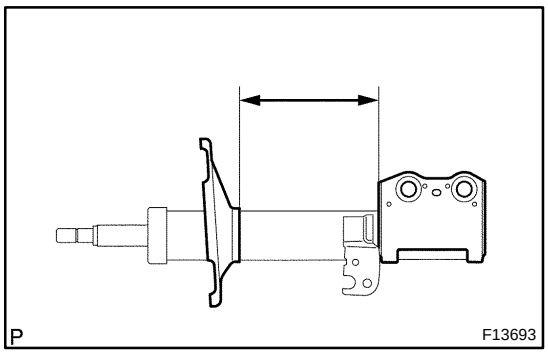

DISPOSAL

1. DISPOSE SHOCK ABSORBER ASSY FRONT LH

(a) Fully extend the shock absorber piston rod.

(b) Using a drill, make a hole in the cylinder as shown in the illustration to discharge the gas inside.

CAUTION:

- **When drilling, chips may fly out, work carefully.**
- **The gas is colorless, odorless and non–poisonous.**

FRONT SHOCK ABSORBER WITH COIL SPRING

2607V–03

OVERHAUL

HINT:

COMPONENTS: See page 26–3

1. REMOVE FRONT WHEEL

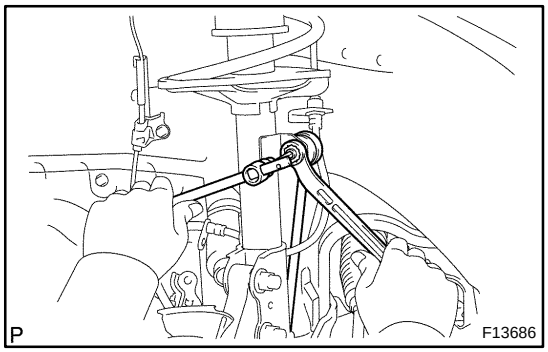

2. DISCONNECT FRONT STABILIZER LINK ASSY LH

(a) Remove the nut and disconnect the front stabilizer link assy LH from the shock absorber assy front LH.

HINT:

If the ball joint turns together with the nut, use a hexagon (6 mm) wrench to hold the stud.

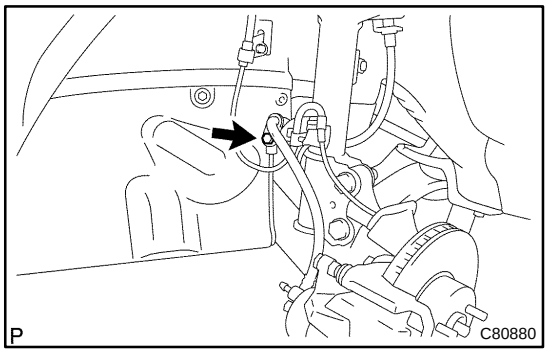

3. DISCONNECT FRONT FLEXIBLE HOSE

(a) w/ ABS:

Remove the bolt, disconnect the front flexible hose No. 1 and speed sensor front LH.

(b) w/o ABS:

Remove the bolt, disconnect the front flexible hose.

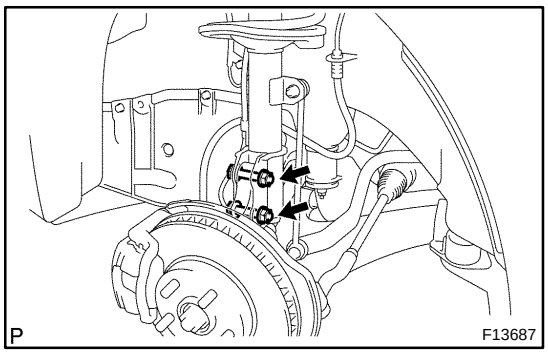

4. REMOVE FRONT SHOCK ABSORBER WITH COIL SPRING

(a) Remove the 2 bolts and nuts on the lower side of the shock absorber assy front LH.

NOTICE:

When removing the bolt, stop the bolt from rotating and loosen the nut.

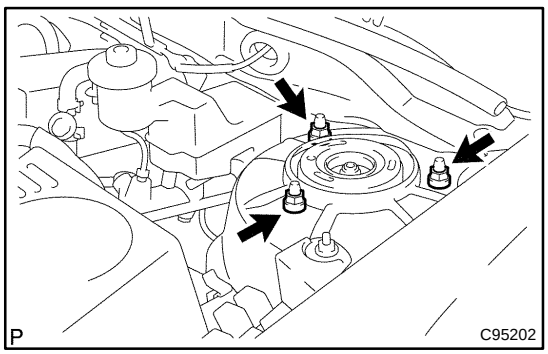

(b) Remove the 3 nuts on the upper side of the shock absorber assy front LH.

(c) Remove the front shock absorber with the coil spring.

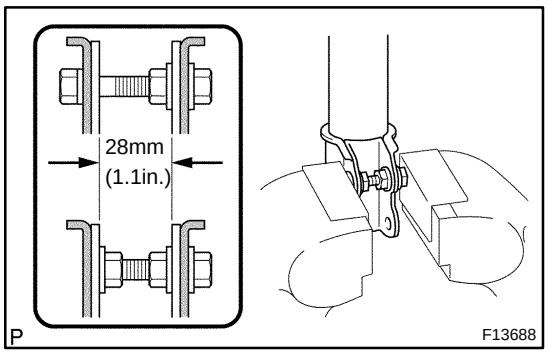

5. FIX FRONT SHOCK ABSORBER WITH COIL SPRING

(a) Install 2 nuts and a bolt to the bracket at the lower side of the shock absorber assy front LH and secure it in a vise.

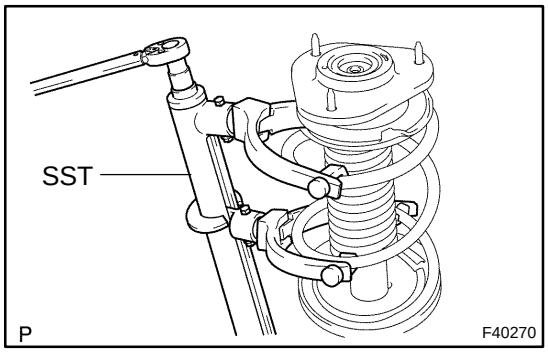

6. REMOVE SHOCK ABSORBER ASSY FRONT LH

(a) Remove the front suspension support dust cover LH from the front suspension support sub–assy LH.

(b) Using SST, compress the front coil spring LH.
SST 09727–30021

NOTICE:

Do not use an impact wrench. It will damage the SST.

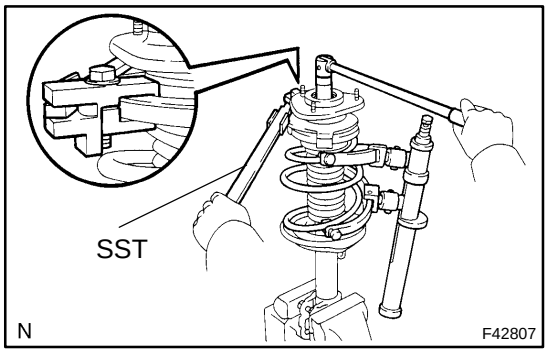

(c) Using SST to hold the front coil spring seat upper LH, remove the nut.
SST 09729–22031

(d) Remove the front suspension support sub–assy LH, front suspension support LH dust seal, front coil spring seat upper LH, front coil spring insulator upper LH, front coil spring LH, front spring bumper LH and front coil spring insulator lower LH.

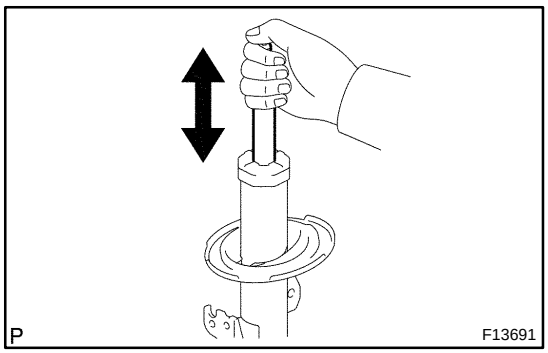

7. INSPECT SHOCK ABSORBER ASSY FRONT LH

(a) Compress and extend the shock absorber rod and check that there is no abnormal resistance or unusual sound during operation.

If there is any abnormality, replace the shock absorber with a new one.

NOTICE:

When disposing of the shock absorber, see DISPOSAL on page 26–14.

8. INSTALL SHOCK ABSORBER ASSY FRONT LH

(a) Install the front coil spring insulator lower LH onto the shock absorber assy front LH.

(b) Install the front spring bumper LH to the shock absorber piston rod.

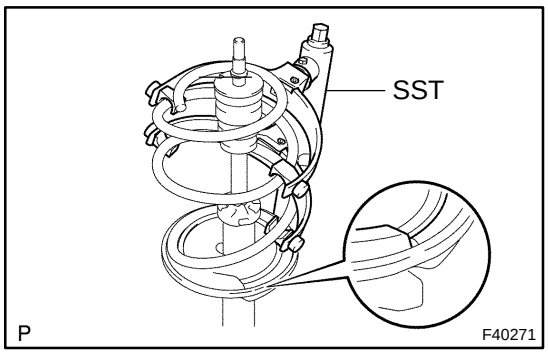

(c) Using SST, compress the front coil spring LH.

NOTICE:

Do not use an impact wrench. It will damage the SST.

(d) Install the front coil spring LH to the shock absorber assy front LH.

HINT:

Fit the lower end of the front coil spring LH into the gap of the spring lower seat.

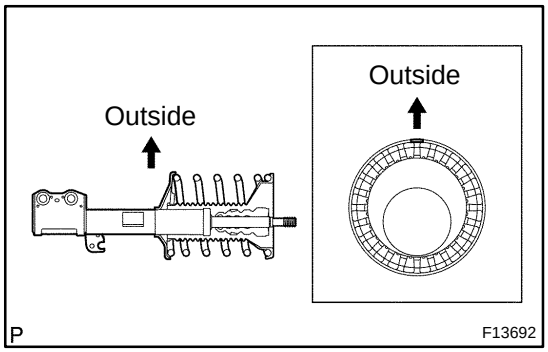

(e) Install the front coil spring insulator upper LH as shown in the illustration.

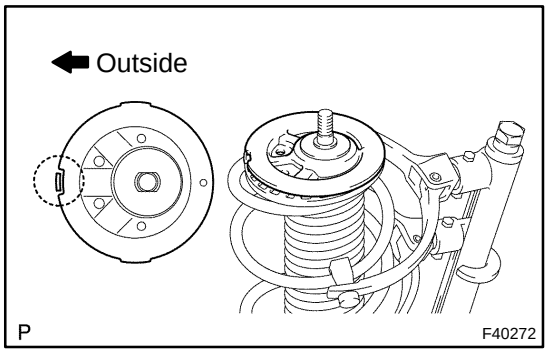

(f) Install the front coil spring seat upper LH to the shock absorber assy front LH with the mark facing the outside of the vehicle.

(g) Install the front suspension support LH dust seal and front suspension support sub–assy LH.

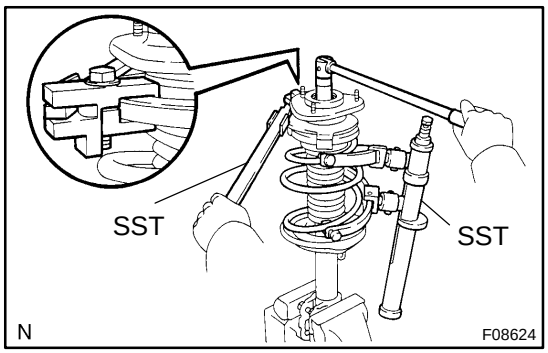

(h) Using SST to hold the front coil spring seat upper LH, install a new nut.

SST 09729–22031

Torque: 47 N·m (479 kgf·cm, 35 ft·lbf)

(i) Remove the SST.

(j) Install the front suspension support dust cover LH.

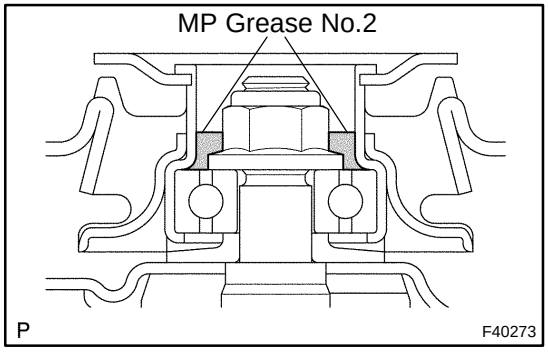

(k) Apply MP grease No.2 into the suspension support sub–assy LH.

CAUTION:

Do not touch grease on rubber surface of upper support.

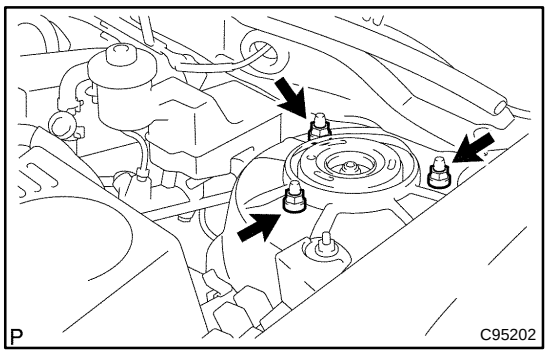

9. INSTALL FRONT SHOCK ABSORBER WITH COIL SPRING

(a) Install the shock absorber with the 2 bolts.

(b) Install the 3 nuts to the upper side of front shock absorber with coil spring.

Torque: 39 N·m (398 kgf·cm, 29 ft·lbf)

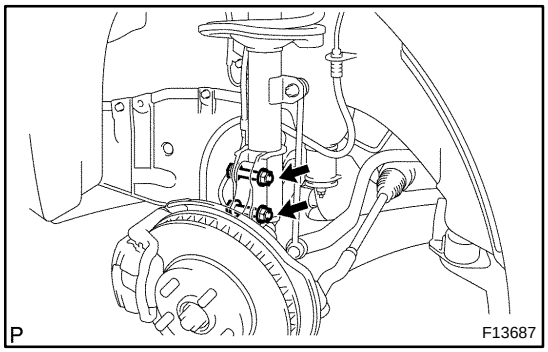

(c) Install the 2 bolts and nuts to the lower side of front shock absorber with coil spring.

Torque: 220 N·m (2,243 kgf·cm, 162 ft·lbf)

NOTICE:

When installing bolt, stop the bolt from rotating and torque the nut.

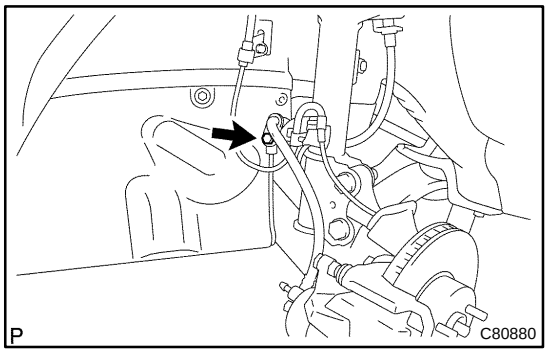

10. INSTALL FRONT FLEXIBLE HOSE

(a) w/ ABS:

Install the front flexible hose and speed sensor front LH with the bolt.

Torque: 29 N·m (296 kgf·cm, 21 ft·lbf)

(b) w/o ABS:

Install the front flexible hose with the bolt.

Torque: 29 N·m (296 kgf·cm, 21 ft·lbf)

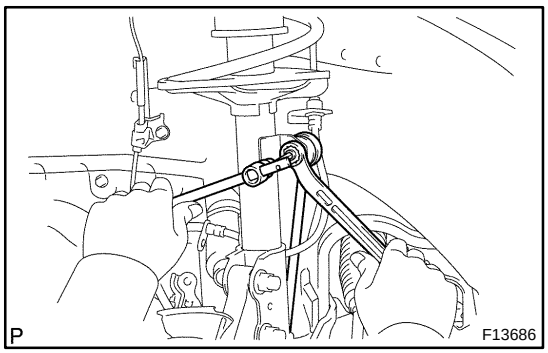

11. INSTALL FRONT STABILIZER LINK ASSY LH

(a) Install the front stabilizer link assy LH with the nut.

Torque: 74 N·m (755 kgf·cm, 55 ft·lbf)

HINT:

If the ball joint turns together with the nut, use a hexagon wrench (6 mm) to hold the stud.

12. INSTALL FRONT WHEEL

Torque: 103 N·m (1,050 kgf·cm, 76 ft·lbf)

13. INSPECT AND ADJUST FRONT WHEEL ALIGNMENT(See page 26–6)

REAR SUSPENSION SYSTEM

2707V–01

PROBLEM SYMPTOMS TABLE

Use the table below to help you find the cause of the problem. The numbers indicate the probability of the likely cause of the problem. Check each part in order. If necessary, replace these parts.

Symptom	Suspect Area	See page
Wander/pulls	1. Tire (Worn or improperly inflated) 2. Wheel alignment (Incorrect) 3. Steering linkage (Loose or worn) 4. Hub bearing (Worn) 5. Suspension parts (Worn)	28–1 27–6 27–7 – 30–63 –
Bottoming	1. Vehicle (Overloaded) 2. Spring (Weak) 3. Shock absorber (Worn)	– 27–11 27–16 27–11 27–16
Sways/pitches	1. Tire (Worn or improperly inflated) 2. Stabilizer bar (Bent or broken) 3. Shock absorber (Worn)	28–1 27–38 27–39 27–11 27–16
Rear wheel shimmy	1. Tire (Worn or improperly inflated) 2. Wheel (Out of balance) 3. Shock absorber (Worn) 4. Wheel alignment (Incorrect) 5. Hub bearing (Worn)	28–1 28–1 27–11 27–16 27–6 27–7 30–63
Abnormal tire wear	1. Tire (Worn or improperly inflated) 2. Wheel alignment (Incorrect) 3. Shock absorber (Worn) 4. Suspension parts (Worn)	28–1 27–6 27–7 27–11 27–16 –

REAR SUSPENSION

COMPONENTS

2707W–01

2WD:

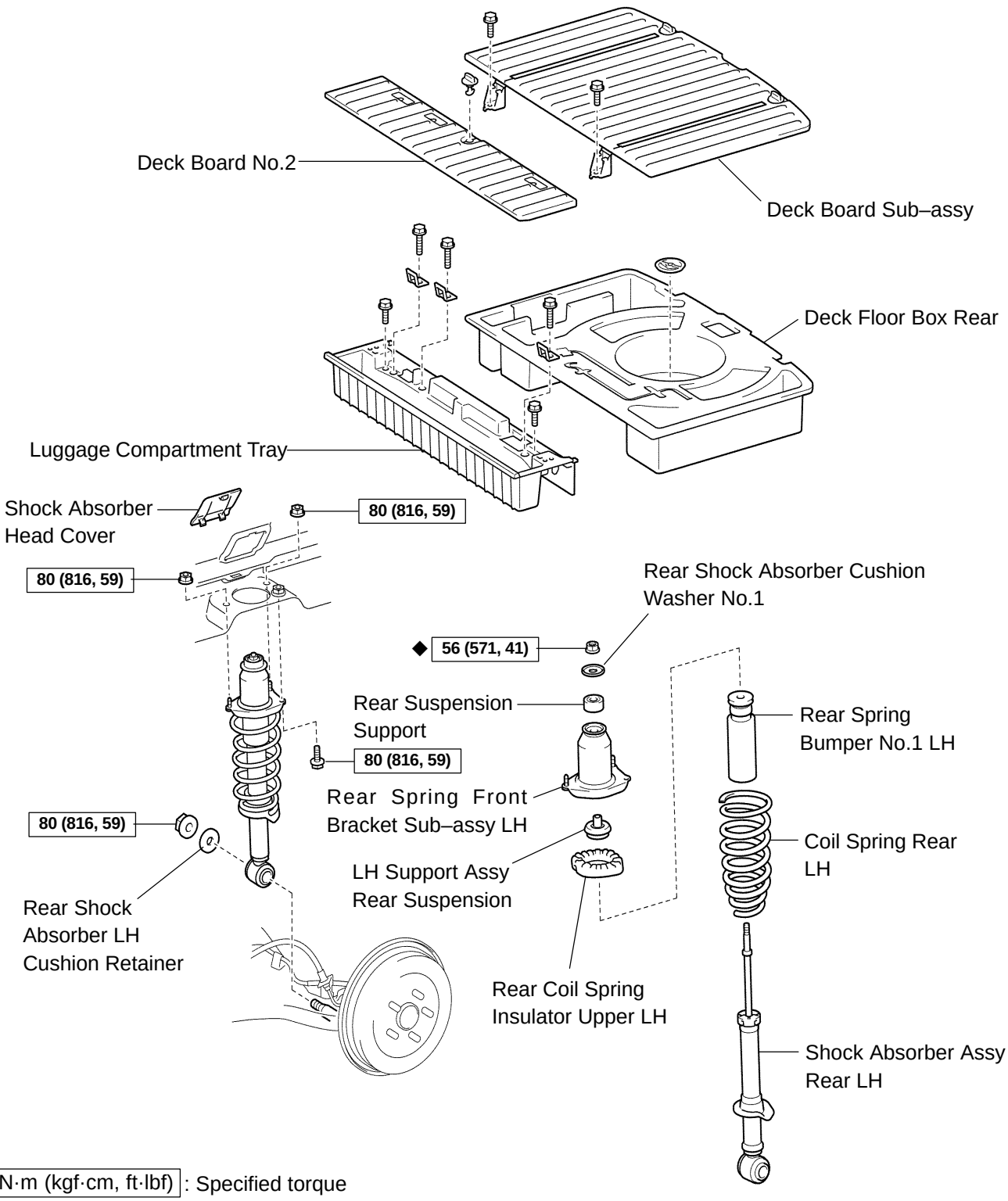

N·m (kgf·cm, ft·lbf) : Specified torque

◆ Non–reusable part

P

D27158

2WD:

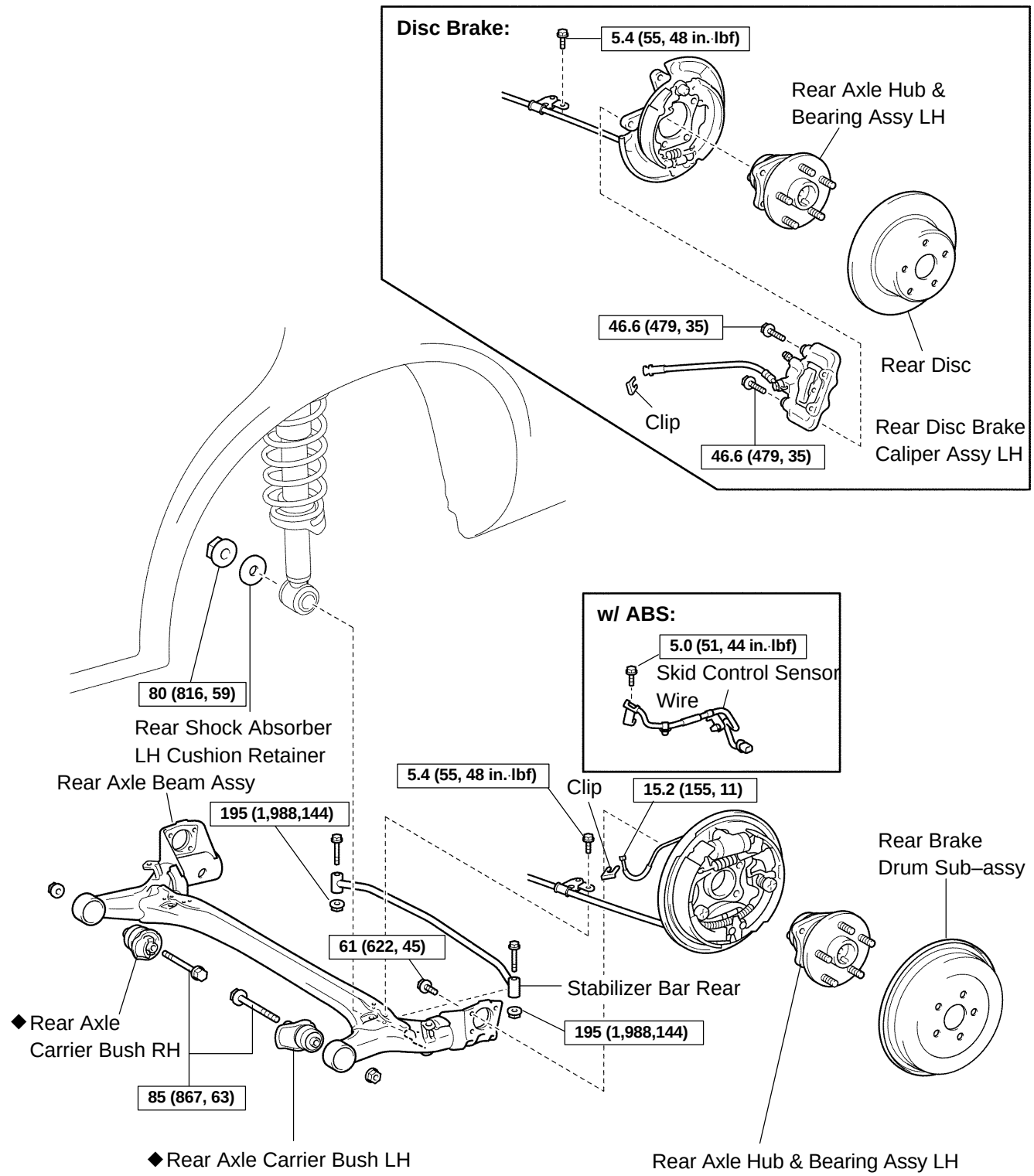

P

N·m (kgf·cm, ft·lbf) : Specified torque

◆ Non–reusable part

D27445

4WD:

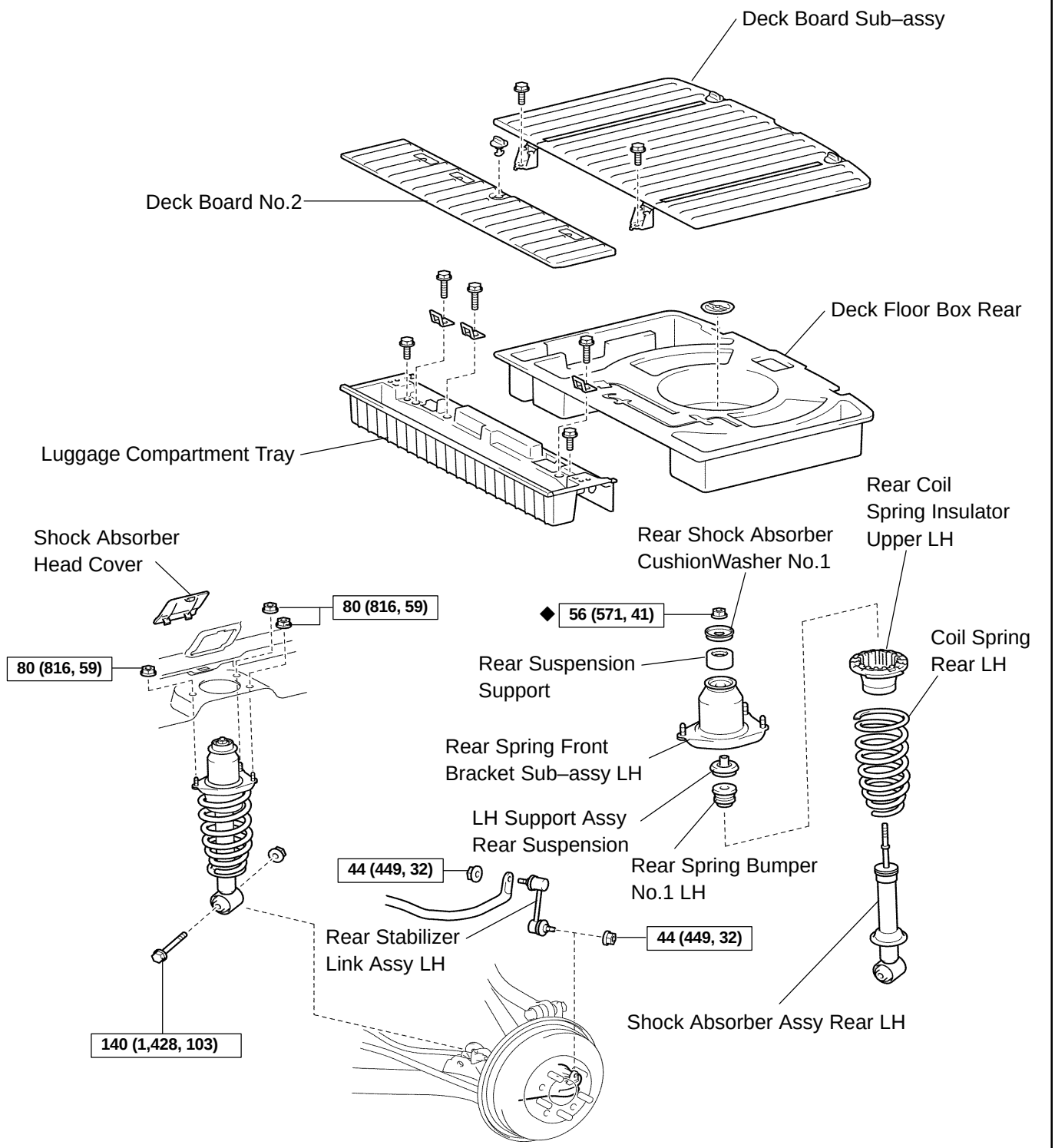

P

N·m (kgf·cm, ft·lbf) : Specified torque

◆ Non–reusable part

F13681

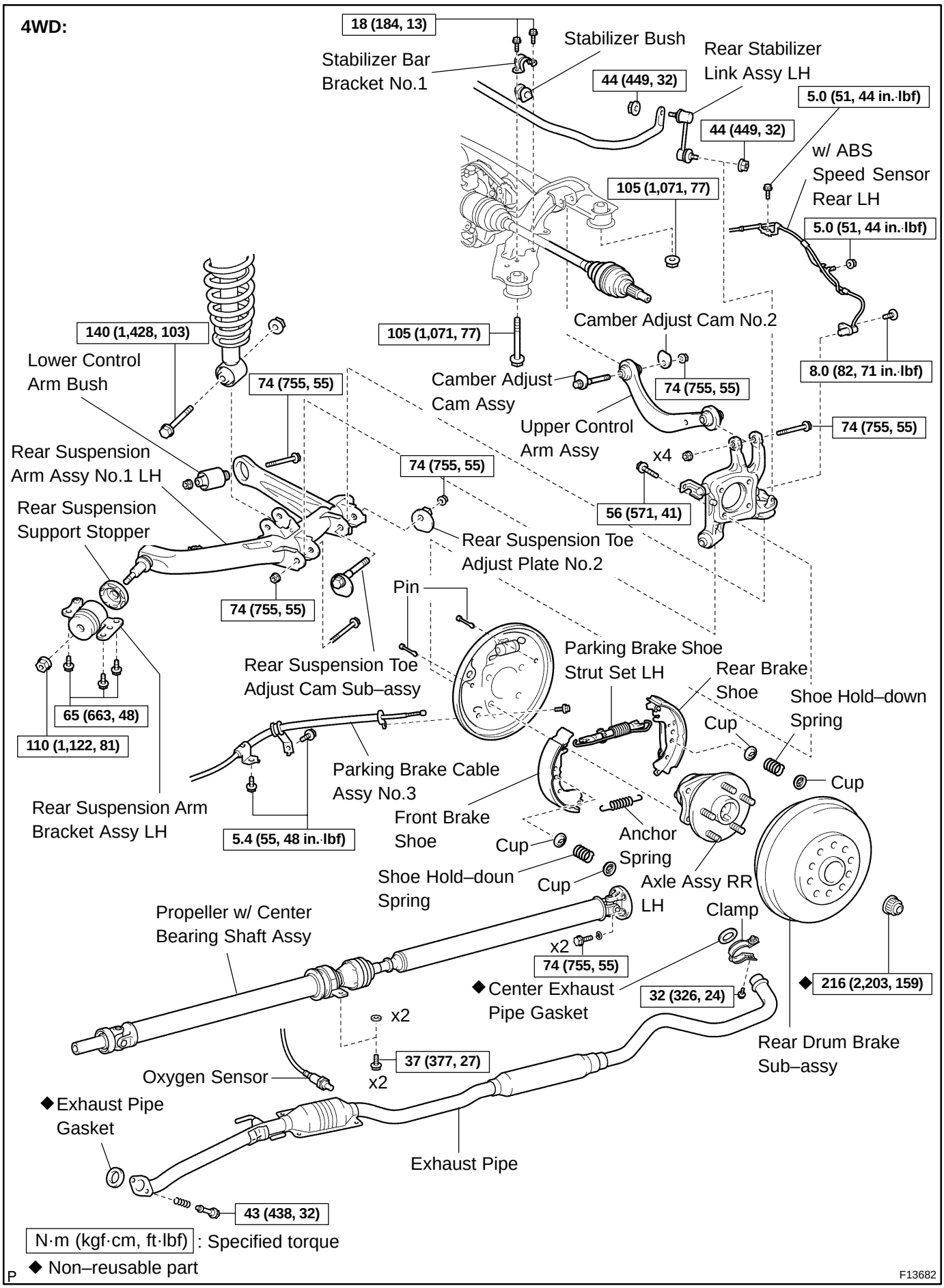
4WD:
18 (184, 13)
Stabilizer Bush
Stabilizer Bar Bracket No.1
Rear Stabilizer Link Assy LH
44 (449, 32)
5.0 (51, 44 in.·lbf)
44 (449, 32)
w/ ABS Speed Sensor Rear LH
105 (1,071, 77)
5.0 (51, 44 in.·lbf)
140 (1,428, 103)
105 (1,071, 77)
Camber Adjust Cam No.2
Lower Control Arm Bush
74 (755, 55)
Camber Adjust Cam Assy
74 (755, 55)
8.0 (82, 71 in.·lbf)
Upper Control Arm Assy
74 (755, 55)
Rear Suspension Arm Assy No.1 LH
x4
74 (755, 55)
56 (571, 41)
Rear Suspension Support Stopper
Rear Suspension Toe Adjust Plate No.2
Pin
74 (755, 55)
Rear Suspension Toe Adjust Cam Sub–assy
Parking Brake Shoe Strut Set LH
Rear Brake Shoe
Shoe Hold–down Spring
65 (663, 48)
110 (1,122, 81)
Cup
Cup
Parking Brake Cable Assy No.3
Rear Suspension Arm Bracket Assy LH
5.4 (55, 48 in.·lbf)
Front Brake Shoe
Cup
Anchor Spring
Shoe Hold–doun Spring
Cup
Axle Assy RR LH
Propeller w/ Center Bearing Shaft Assy
x2
74 (755, 55)
Clamp
◆Center Exhaust Pipe Gasket
32 (326, 24)
◆216 (2,203, 159)
x2
37 (377, 27)
Rear Drum Brake Sub–assy
Oxygen Sensor
x2
◆Exhaust Pipe Gasket
Exhaust Pipe
43 (438, 32)
N·m (kgf·cm, ft·lbf) : Specified torque
◆ Non–reusable part
P
F13682

REAR WHEEL ALIGNMENT (FF)

2707X–01

INSPECTION

1. INSPECT TIRE (See page 28–1)

2. MEASURE VEHICLE HEIGHT (See page 26–6)

NOTICE:

Before inspecting the wheel alignment, adjust the vehicle height to the specified value.

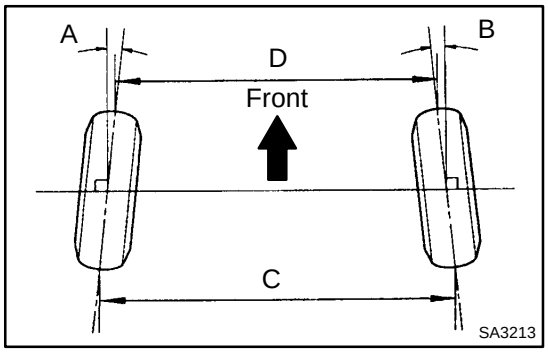

3. INSPECT TOE–IN

Toe–in (total)	A + B: 0°16' ± 16' (0.26° ± 0.26°) C – D: 2.8 ± 2.7 mm (0.11 ± 0.11 in.)

If the toe–in is not within the specified value, inspect and replace the suspension parts as necessary.

4. INSPECT CAMBER

(a) Install the camber–caster–kingpin gauge or position vehicle on wheel alignment tester.

(b) Inspect the camber.

Camber:

Camber	–1°27' ± 30' (–1.45° ± 0.5°)
Right–left error	30' (0.5°) or less

If the measured value is not within the specified value, inspect the suspension parts for damage and/or wear and replace them if necessary become camber is not adjustable.

REAR WHEEL ALIGNMENT (4WD)

2707Y–01

ADJUSTMENT

1. INSPECT TIRE (See page 28–1)

2. MEASURE VEHICLE HEIGHT (See page 26–6)

NOTICE:

Before inspecting the wheel alignment, adjust the vehicle height to the specified value.

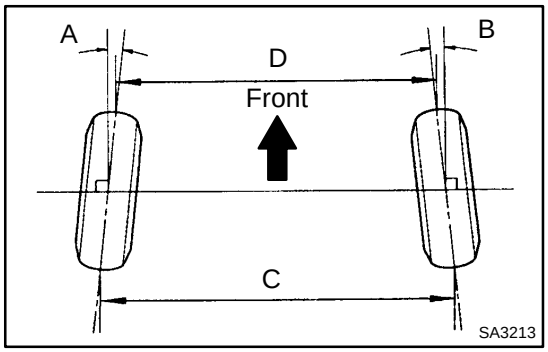

3. INSPECT TOE–IN

Toe–in (total)	A + B: 0°12' ± 12' (0.20° ± 0.20°) C – D: 2.0 ± 2.0 mm (0.08 ± 0.08 in.)

If the toe–in is not within the specified value, inspect and replace the suspension parts as necessary.

4. INSPECT CAMBER

(a) Install the camber–caster–kingpin gauge or position vehicle on wheel alignment tester.

(b) Inspect the camber.

Camber:

Camber	–0°44' ± 45' (–0.73° ± 0.75°)
Right–left error	45' (0.75°) or less

If the measured value is not within the specified value, inspect the suspension parts for damage and/or wear and replace them if necessary because camber is not adjustable.

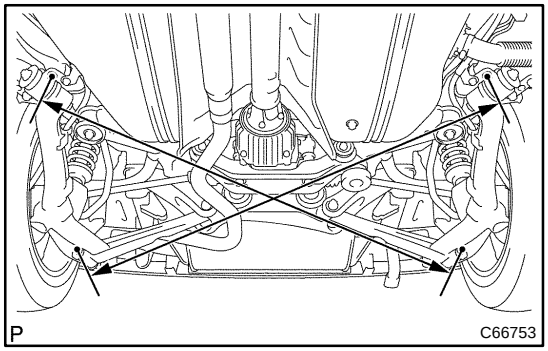

5. ADJUST CAMBER AND TOE–IN

(a) Measure the distance from the LH lower suspension arm bracket set bolt to the RH axle carrier rear side set bolt as shown in the illustration.

(b) Measure the distance from the RH lower suspension arm bracket set bolt to the LH axle carrier rear side set bolt as shown in the illustration.

(c) Employ the same manner to the LH–RH.

Length difference: 6.0 mm (0.236 in.) or less

If the difference exceeds the specified value, adjust it by turning the adjusting cams.

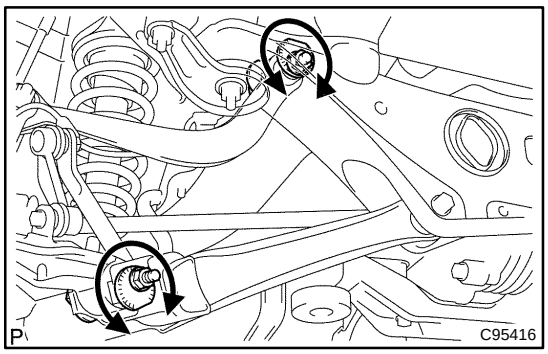

(d) Loosen the upper and lower suspension arm adjusting cam set nuts.

(e) Adjust the camber and toe–in by turning the adjusting cams.

HINT:

Try to adjust the camber and toe– in to the center of the specified values.

(f) Tighten the upper and lower suspension arm adjusting cam set nuts.

Torque: 74 N·m (755 kgf·cm, 55 ft·lbf)

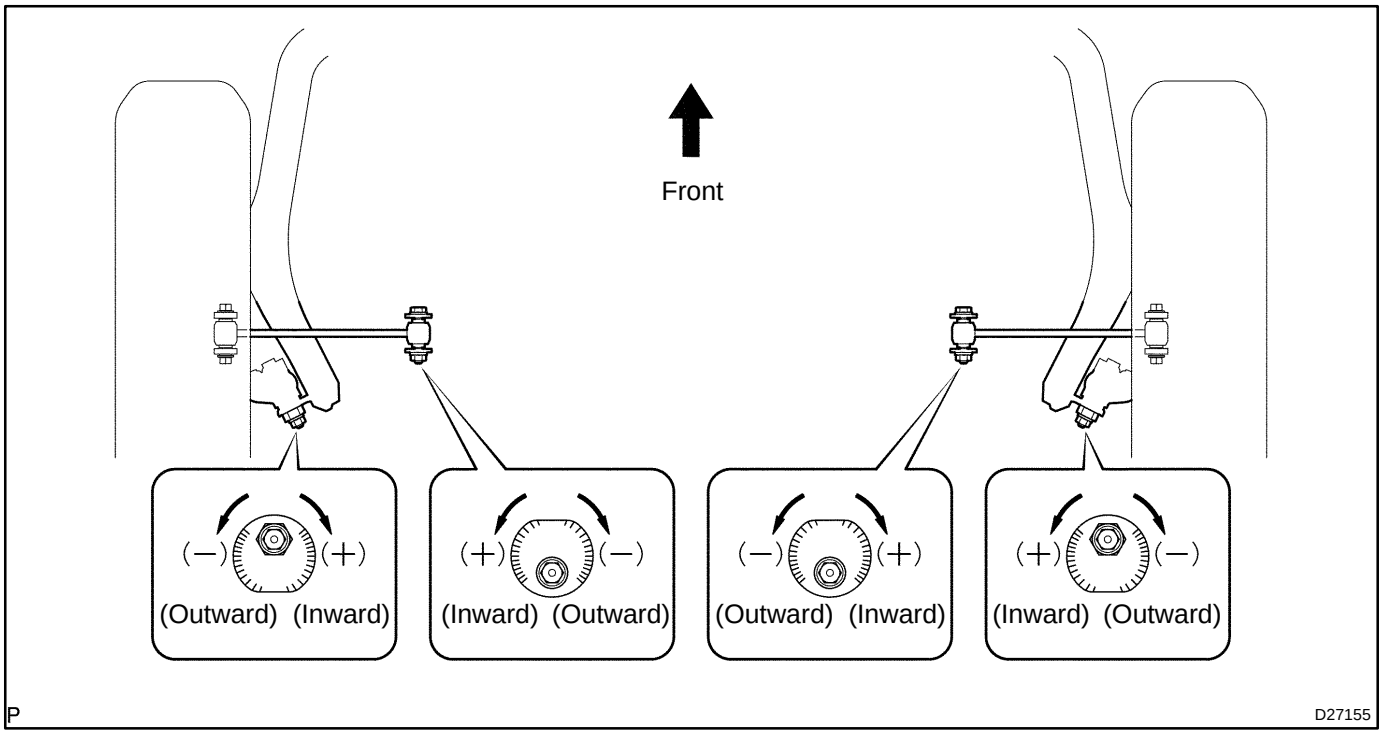

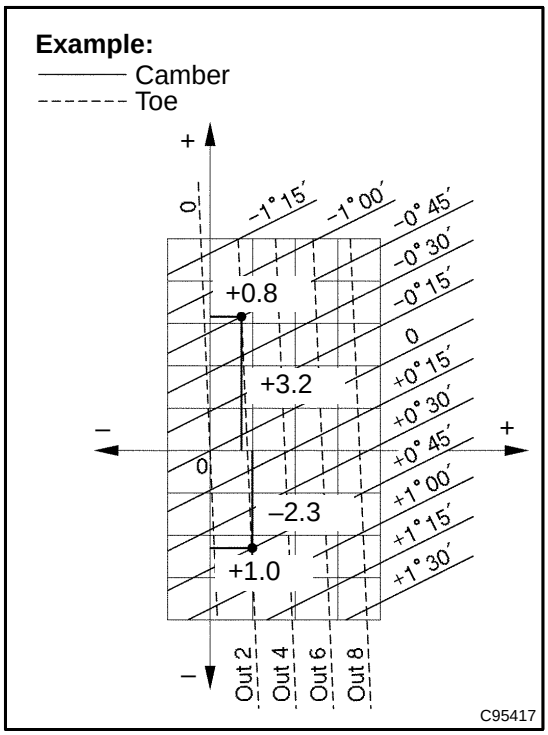

(g) How to read adjusting chart (using examples).

(1) Measure the present alignment.

Example:

Camber (RH): +0°01’ (+0.02°)

Camber (LH): –1°29’ (–1.48°)

Toe–in (total): IN 6.0 mm (0.236 in.)

(2) Mark the difference between the standard value (A) and the measured value (B) on the adjustment chart.

Standard value:

Camber: –0°44’ (–0.73°)

Toe–in (total): IN 2.0 mm (0.079 in.)

Formula: A – B = C

Camber: (RH): –0°44’ – (+0°01’) = –0°45’

Camber: (LH): –0°44’ – (–1°29’) = 0°45’

Toe–in (total): IN 2.0 – IN 6.0 = OUT 4.0

Toe–in (each side): OUT 2.0

(3) As shown in the example chart, read the distance from the marked point to center of the chart, and adjust the upper and/or lower arm adjusting cams accordingly.

Amount to turn adjusting cams (by graduation):
Upper arm cam (RH): + (Inward) 3.2
Lower arm cam (RH): + (Inward) 0.8
Upper arm cam (LH): – (Outward) 2.3
Lower arm cam (LH): + (Inward) 1.0

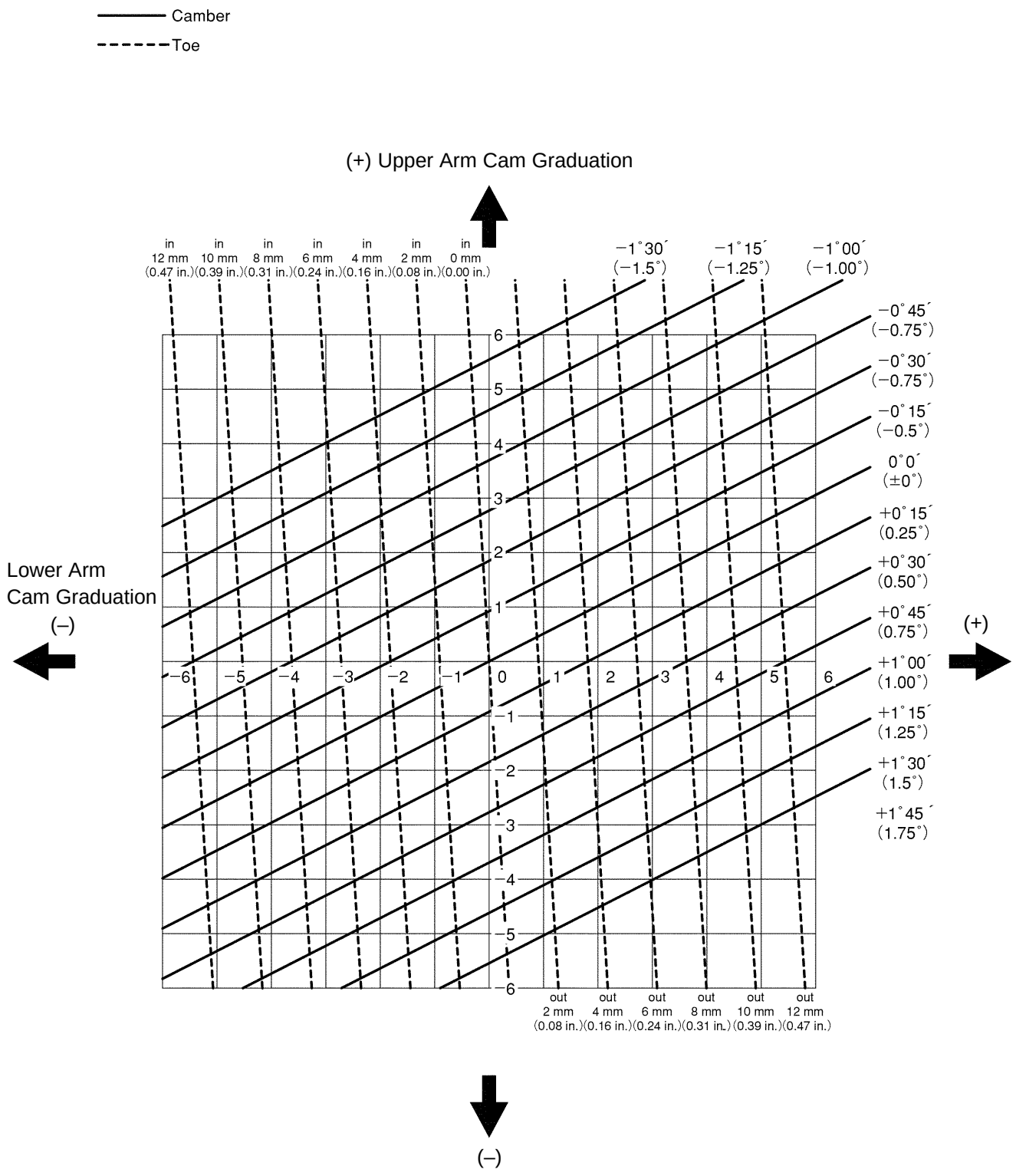
Camber
Toe
(+) Upper Arm Cam Graduation
in 12 mm (0.47 in.)
in 10 mm (0.39 in.)
in 8 mm (0.31 in.)
in 6 mm (0.24 in.)
in 4 mm (0.16 in.)
in 2 mm (0.08 in.)
in 0 mm (0.00 in.)
−1°30′ (−1.5°)
−1°15′ (−1.25°)
−1°00′ (−1.00°)
−0°45′ (−0.75°)
−0°30′ (−0.75°)
−0°15′ (−0.5°)
0°0′ (±0°)
+0°15′ (0.25°)
+0°30′ (0.50°)
+0°45′ (0.75°)
+1°00′ (1.00°)
+1°15′ (1.25°)
+1°30′ (1.5°)
+1°45′ (1.75°)
Lower Arm Cam Graduation
(–)
(+)
−6 −5 −4 −3 −2 −1 0 1 2 3 4 5 6
6 5 4 3 2 1 −1 −2 −3 −4 −5 −6
out 2 mm (0.08 in.)
out 4 mm (0.16 in.)
out 6 mm (0.24 in.)
out 8 mm (0.31 in.)
out 10 mm (0.39 in.)
out 12 mm (0.47 in.)
(–)

P D27157

27080–01

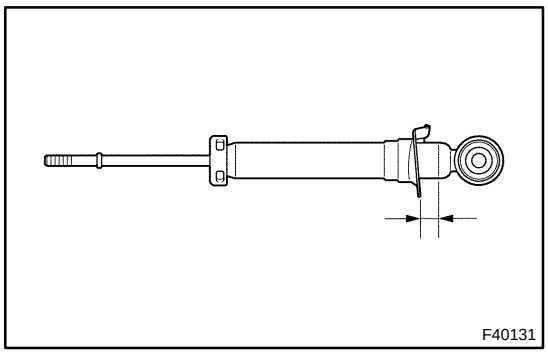

DISPOSAL

1. DISPOSE SHOCK ABSORBER ASSY REAR LH

(a) Fully extend the shock absorber rod.

(b) Using a drill, make a hole in the cylinder as shown in the illustration to discharge the gas inside the cylinder.

CAUTION:

- **When drilling, since the fragments may fly out, work carefully.**
- **The discharged gas is colorless, odorless and non–poisonous.**

REAR SHOCK ABSORBER WITH COIL SPRING (FF)

2707Z–01

OVERHAUL

HINT:

COMPONENTS: See page 27–2

1. **REMOVE REAR WHEEL**
2. **REMOVE DECK BOARD NO.2 (See Page 76–17)**
3. **REMOVE DECK BOARD SUB–ASSY (See Page 76–17)**
4. **REMOVE DECK FLOOR BOX REAR (See Page 76–17)**
5. **REMOVE LUGGAGE COMPARTMENT TRAY (See Page 76–17)**
6. **REMOVE SHOCK ABSORBER HEAD COVER**

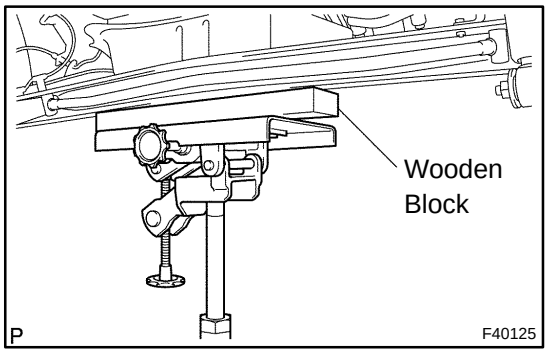

7. REMOVE REAR SHOCK ABSORBER WITH COIL SPRING

(a) Support the rear axle beam assy with jack.

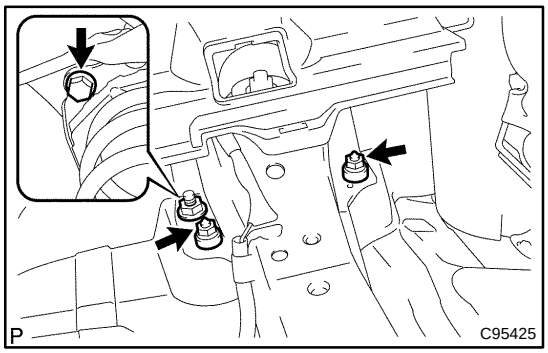

(b) Remove the 2 nuts and bolt.

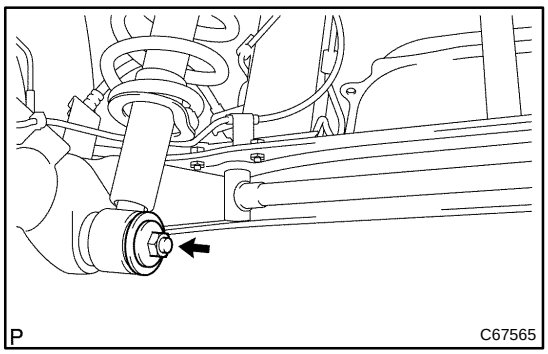

(c) Remove the nut, rear shock absorber LH cushion retainer and rear shock absorber with coil spring.

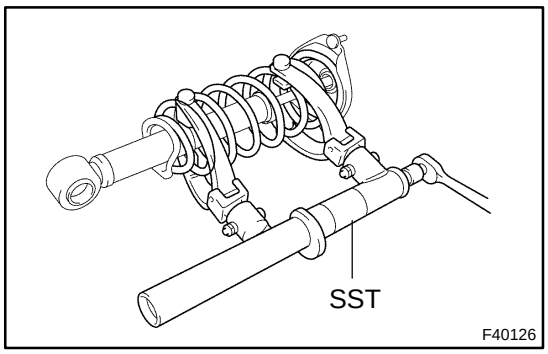

8. REMOVE SHOCK ABSORBER ASSY REAR LH

(a) Using SST, compress the coil spring rear LH.
SST 09727–30021

NOTICE:

Do not use an impact wrench. It will damage the SST.

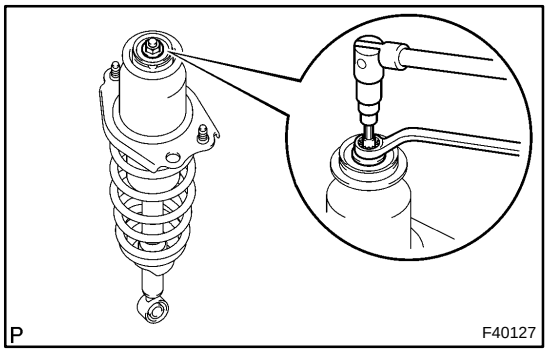

(b) Use a 6 mm hexagon wrench to hold the piston rod and remove the nut.

(c) Remove the rear shock absorber cushion washer No.1, rear suspension support, rear spring front bracket sub–assy LH, LH support assy rear suspension, rear coil spring insulator upper LH, rear spring bumper No.1 LH and coil spring rear LH.

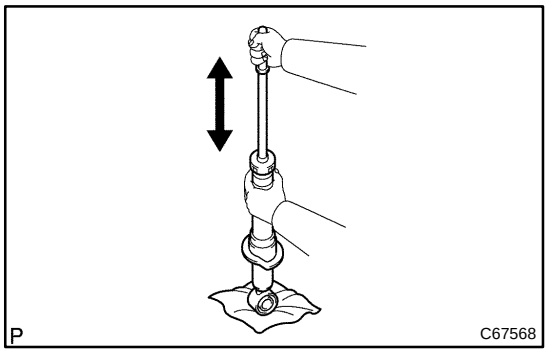

9. INSPECT SHOCK ABSORBER ASSY REAR LH

(a) Compress and extend the shock absorber rod and check for abnormal resistance or unusual sound during the operation.

If an abnormality is found, replace the shock absorber assy rear LH with a new one.

NOTICE:

When disposing of the shock absorber assy rear LH, see DISPOSAL on page 27–15.

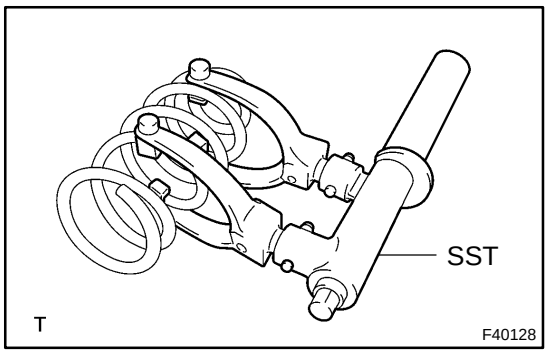

10. INSTALL SHOCK ABSORBER ASSY REAR LH

(a) Using SST, compress the coil spring rear LH.
SST 09727–30021

NOTICE:

Do not use an impact wrench. It will damage the SST.

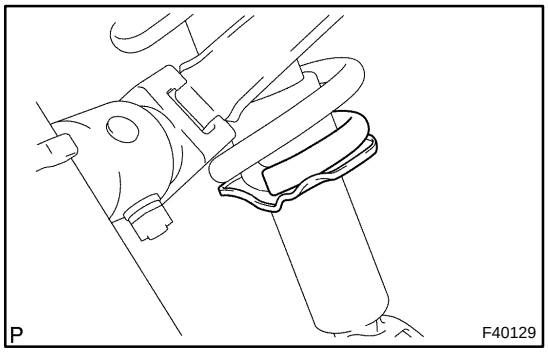

(b) Insert the coil spring rear LH into the shock absorber assy rear LH.

NOTICE:

Fit the lower end of the coil spring rear LH into the gap of the spring lower seat.

(c) Install the rear spring bumper No.1 LH and LH support assy rear suspension.

(d) Set the rear coil spring insulator upper LH to the rear spring front bracket sub–assy LH.

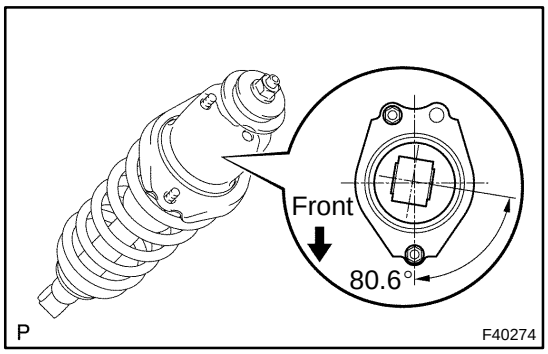

(e) Position the rear spring front bracket sub–assy LH with rear coil spring insulator upper LH as shown in the illustration.

HINT:

Place the RH side on the symmetric position to the illustration.

(f) Install the rear suspension support and rear shock absorber cushion washer No.1.

(g) Temporarily tighten a new center nut.

(h) Remove the SST.

(i) Recheck the direction of the rear spring front bracket sub–assy LH.

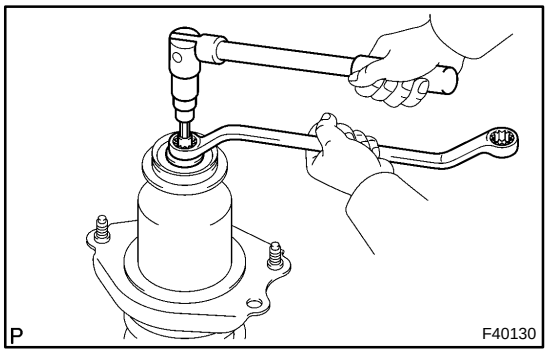

(j) Use a 6 mm hexagon wrench to hold the piston rod and tighten the nut.
Torque: 56 N·m (571 kgf·cm, 41 ft·lbf)

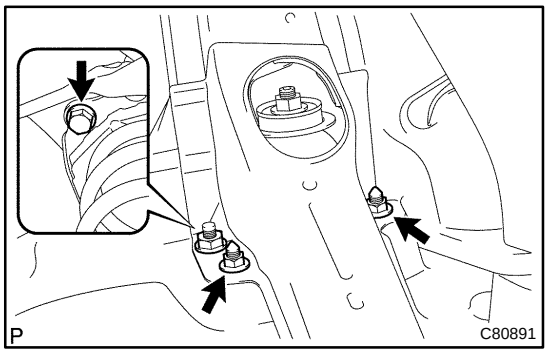

11. INSTALL REAR SHOCK ABSORBER WITH COIL SPRING

(a) Install the 2 nuts and bolt.
Torque: 80 N·m (816 kgf·cm, 59 ft·lbf)

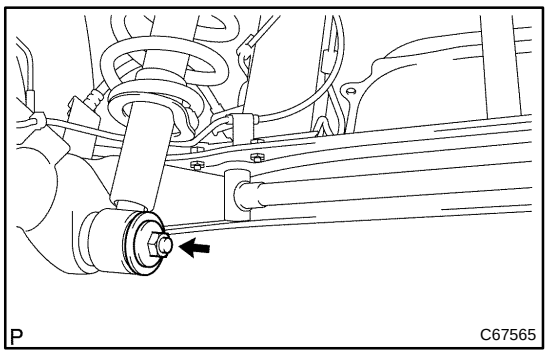

(b) Install the rear shock absorber with coil spring, temporarily tighten the nut and rear shock absorber LH cushion retainer.

12. INSTALL LUGGAGE COMPARTMENT TRAY (See Page 76–17)
13. INSTALL DECK BOARD SUB–ASSY (See Page 76–17)
14. INSTALL DECK BOARD NO.2 (See Page 76–17)
15. INSTALL DECK FLOOR BOX REAR (See Page 76–17)
16. INSTALL SHOCK ABSORBER HEAD COVER

17. STABILIZE SUSPENSION

(a) Install the rear wheel and jack down the vehicle.
Torque: 103 N·m (1,050 kgf·cm, 76 ft·lbf)

(b) Bounce the vehicle up and down several times to stabilize the suspension.

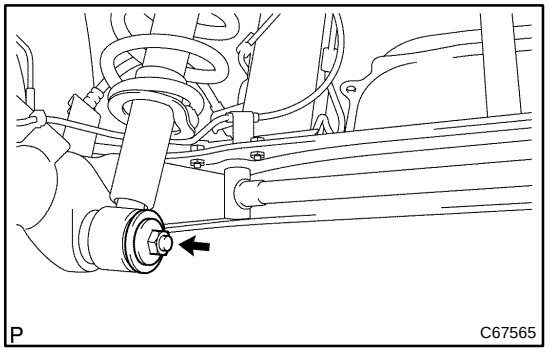

18. FULLY TIGHTEN REAR SHOCK ABSORBER WITH COIL SPRING

(a) Fully tighten the nut.
Torque: 80 N·m (816 kgf·cm, 59 ft·lbf)

19. INSPECT REAR WHEEL ALIGNMENT (See page 27–6)

27082–01

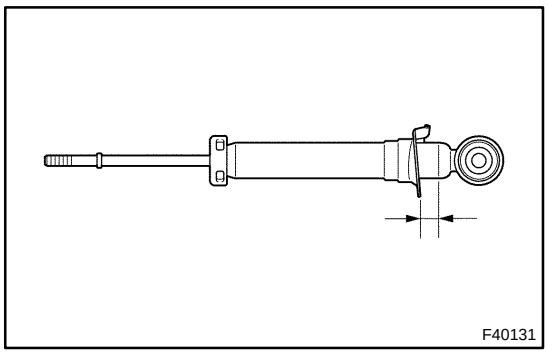

DISPOSAL

1. DISPOSE SHOCK ABSORBER ASSY REAR LH

(a) Fully extend the shock absorber rod.

(b) Using a drill, make a hole in the cylinder as shown in the illustration to discharge the gas inside the cylinder.

CAUTION:

- **When drilling, since fragments may fly out, work carefully.**
- **The discharged gas is colorless, odorless and non–poisonous.**

REAR SHOCK ABSORBER WITH COIL SPRING (4WD)

27081–01

OVERHAUL

HINT:

COMPONENTS: See page 27–2

1. **REMOVE REAR WHEEL**
2. **REMOVE DECK BOARD NO.2 (See page 76–17)**
3. **REMOVE DECK BOARD SUB–ASSY (See page 76–17)**
4. **REMOVE DECK FLOOR BOX REAR (See page 76–17)**
5. **REMOVE LUGGAGE COMPARTMENT TRAY (See page 76–17)**
6. **REMOVE SHOCK ABSORBER HEAD COVER**
7. **SEPARATE REAR STABILIZER LINK ASSY LH (See page 30–66)**

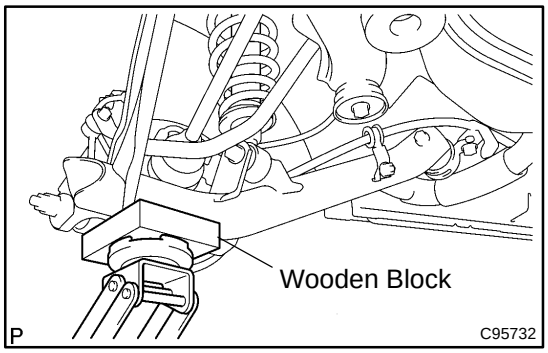

8. REMOVE REAR SHOCK ABSORBER WITH COIL SPRING

(a) Support the rear suspension arm assy No.1 LH.

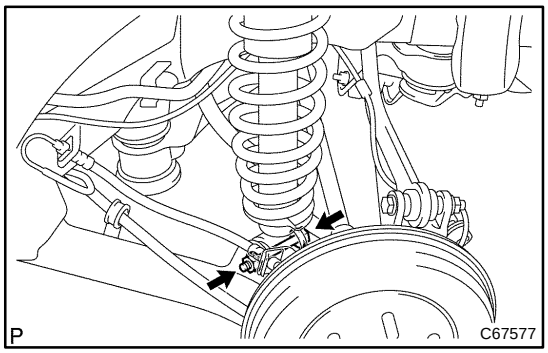

(b) Remove the bolt and nut from the rear suspension arm assy No.1 LH.

NOTICE:

When removing the bolt, stop the nut from rotating and loosen the bolt.

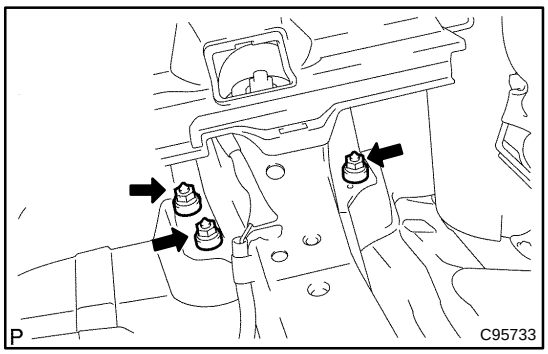

(c) Remove the 3 nuts.

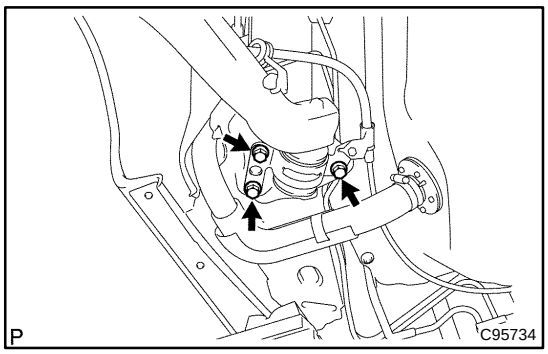

(d) Remove the 3 bolts from the rear suspension arm assy No.1 LH.

(e) Press the rear suspension arm assy No.1 LH down to the outside of the vehicle and remove the rear shock absorber with coil spring.

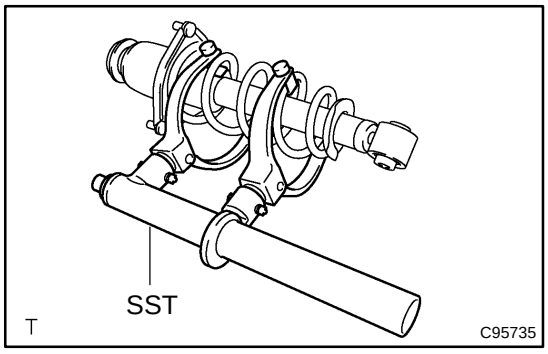

9. REMOVE SHOCK ABSORBER ASSY REAR LH

(a) Using SST, compress the coil spring rear LH.

NOTICE:

Do not use an impact wrench. It will damage the SST.

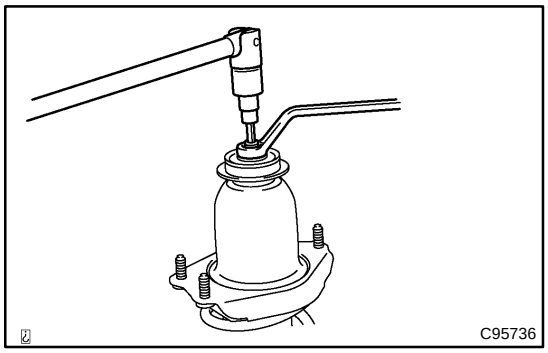

(b) Use a 6 mm hexagon wrench to hold the piston rod, remove the nut.

(c) Remove the rear shock absorber cushion washer No.1, rear suspension support, rear spring front bracket sub–assy LH, LH support assy rear suspension, rear spring bumper No.1 LH, rear coil spring insulator upper LH and coil spring rear LH.

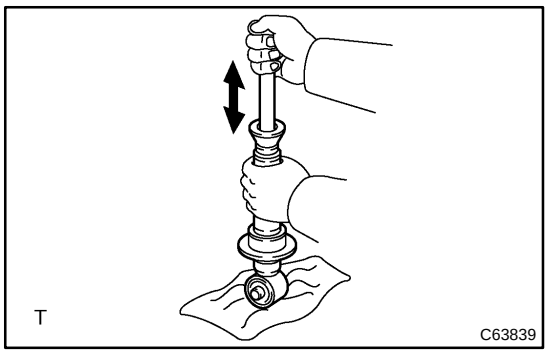

10. INSPECT SHOCK ABSORBER ASSY REAR LH

(a) Compress and extend the shock absorber rod and check for abnormal resistance or unusual sound during the operation.

If there is any abnormality, replace the shock absorber assy rear LH with a new one.

NOTICE:

When disposing of the shock absorber assy rear LH, see DISPOSAL on page 27–20.

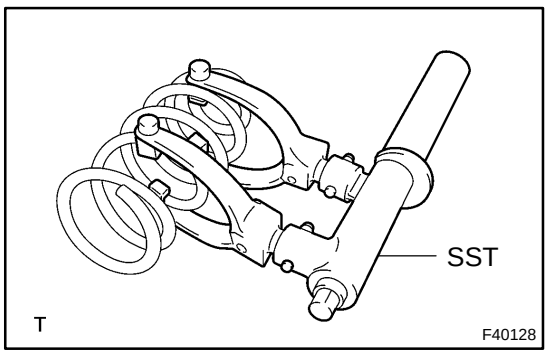

11. INSTALL SHOCK ABSORBER ASSY REAR LH

(a) Using SST, compress the coil spring rear LH.
SST 09727–30021

NOTICE:

Do not use an impact wrench. It will damage the SST.

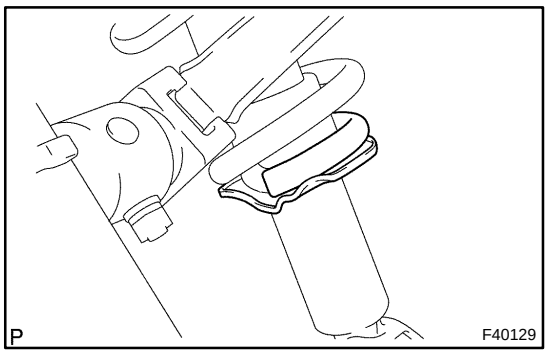

(b) Insert the coil spring rear LH to the shock absorber assy rear LH.

NOTICE:

Fit the lower end of the coil spring rear LH into the gap of the spring lower seat.

(c) Install the rear spring bumper No.1 LH and LH support assy rear suspension.

(d) Set the rear coil spring insulator upper LH to the rear spring front bracket sub–assy LH.

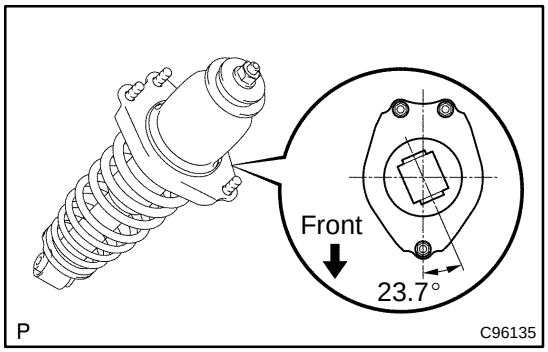

(e) Position the rear spring front bracket sub–assy LH with rear coil spring insulator upper LH as shown in the illustration.

HINT:

Place the RH side on the symmetric position to the illustration.

(f) Install the rear suspension support and rear shock absorber cushion washer No.1.

(g) Temporarily tighten a new center nut.

(h) Remove the SST.

(i) Recheck the direction of the spring bracket.

(j) Use a 6 mm hexagon wrench to hold the piston rod, tighten the nut.

Torque: 56 N·m (571 kgf·cm, 41 ft·lbf)

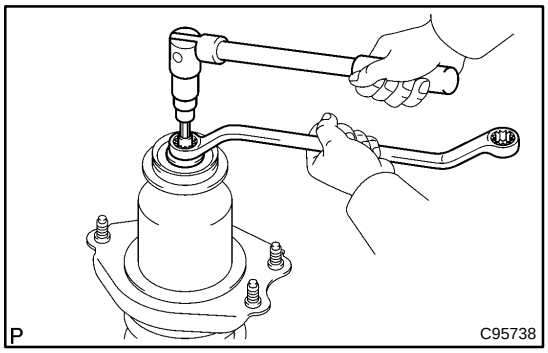

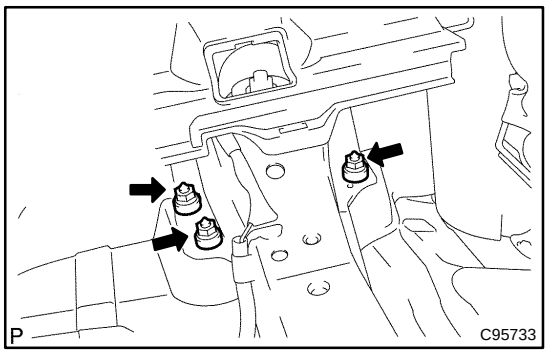

12. INSTALL REAR SHOCK ABSORBER WITH COIL SPRING

(a) Install the 3 nuts.

Torque: 80 N·m (816 kgf·cm, 59 ft·lbf)

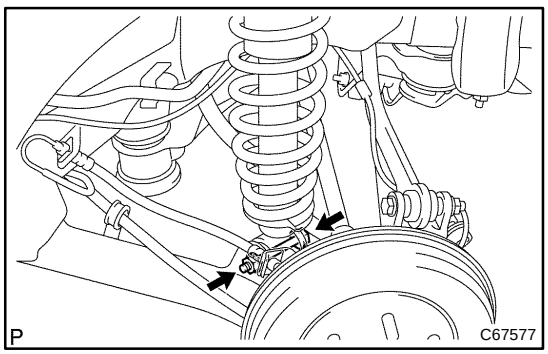

(b) Install the rear shock absorber with coil spring, temporarily tighten the bolt and nut.

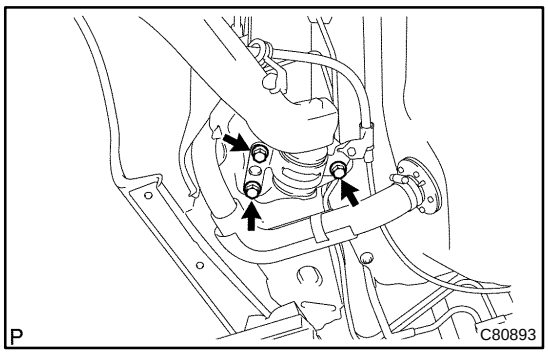

(c) Install the rear suspension arm assy No.1 LH with 3 bolts.
Torque: 65 N·m (663 kgf·cm, 48 ft·lbf)

13. INSTALL REAR STABILIZER LINK ASSY LH (See page 30–66)
14. INSTALL LUGGAGE COMPARTMENT TRAY (See page 76–17)
15. INSTALL DECK BOARD SUB–ASSY (See page 76–17)
16. INSTALL DECK BOARD NO.2 (See page 76–17)
17. INSTALL DECK FLOOR BOX REAR (See page 76–17)
18. INSTALL SHOCK ABSORBER HEAD COVER
19. STABILIZE SUSPENSION

(a) Install the rear wheel and jack down the vehicle.
Torque: 103 N·m (1,050 kgf·cm, 76 ft·lbf)

(b) Bounce the vehicle up and down several times to stabilize the suspension.

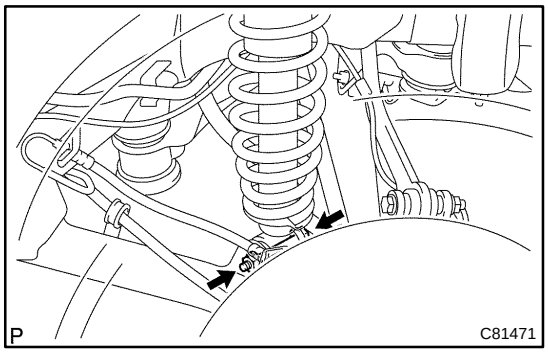

20. FULLY TIGHTEN REAR SHOCK ABSORBER WITH COIL SPRING

(a) Fully tighten the bolt and nut.
Torque: 140 N·m (1,428 kgf·cm, 103 ft·lbf)

NOTICE:
When installing the bolt, stop the nut from rotating and torque the bolt.

21. INSPECT AND ADJUST REAR WHEEL ALIGNMENT (See page 27–7)

REAR SUSPENSION ARM ASSY NO.1 LH (4WD)

27084–01

REPLACEMENT

HINT:

COMPONENTS: See page 27–2.

1. REMOVE REAR WHEEL

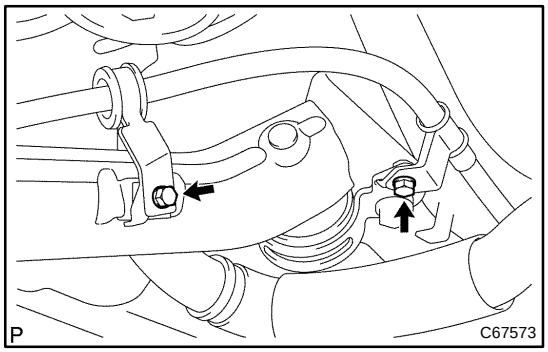

2. DISCONNECT PARKING BRAKE CABLE ASSY NO.3

(a) Remove the 2 bolts, disconnect the parking brake cable assy No.3.

3. DISCONNECT PARKING BRAKE CABLE ASSY NO.2

HINT:

Disconnect the RH side by the same procedure as the LH side.

4. SEPARATE REAR STABILIZER LINK ASSY LH (See page 30–66)

5. SEPARATE REAR STABILIZER LINK ASSY RH

HINT:

Separate the RH side by the same procedure as the LH side.

6. REMOVE REAR SUSPENSION ARM ASSY NO.1 LH

(a) Remove the frontal bolt and nut.

(b) Support the upper control arm assy securely.

(c) Make matchmarks on the rear suspension toe adjust plate No.2, rear suspension toe adjust cam sub–assy and rear suspension arm assy No.1 LH.

(d) Remove the nut rear suspension toe adjust plate No.2 and rear suspension toe adjust cam sub–assy.

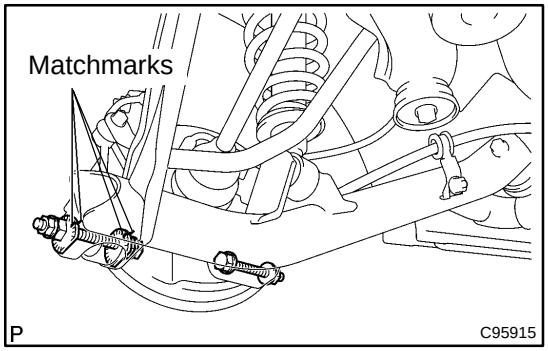

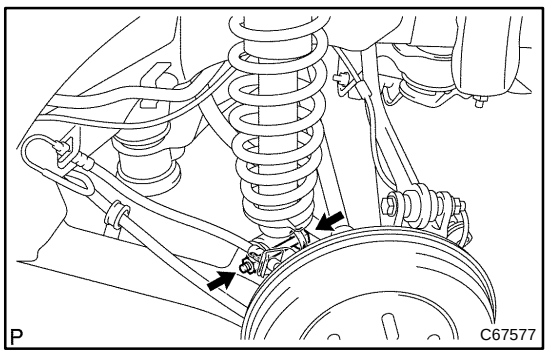

(e) Remove the bolt and nut, disconnect the rear shock absorber with coil spring.

NOTICE:

When removing the bolt, stop the nut from rotating and loosen the bolt.

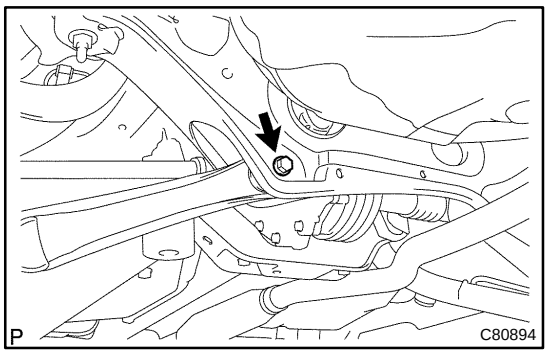

(f) Remove the bolt and nut, separate the rear side rear suspension arm assy No.1 LH.

NOTICE:

When removing the bolt, stop the nut from rotating and loosen the bolt.

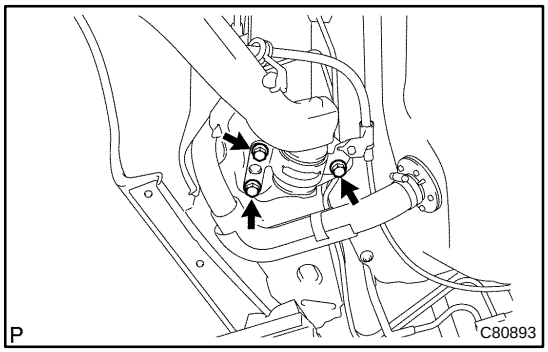

(g) Remove the front side 3 bolts and rear lower suspension arm assy No.1 LH.

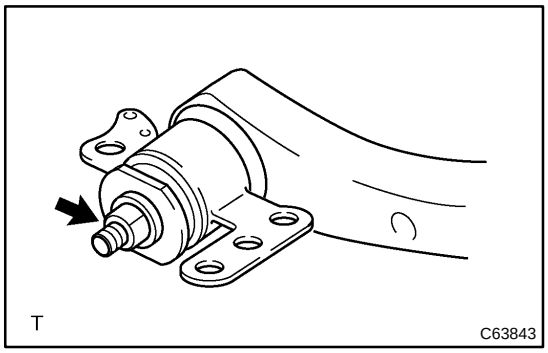

(h) Remove the nut, rear suspension arm bracket assy LH and rear suspension support stopper.

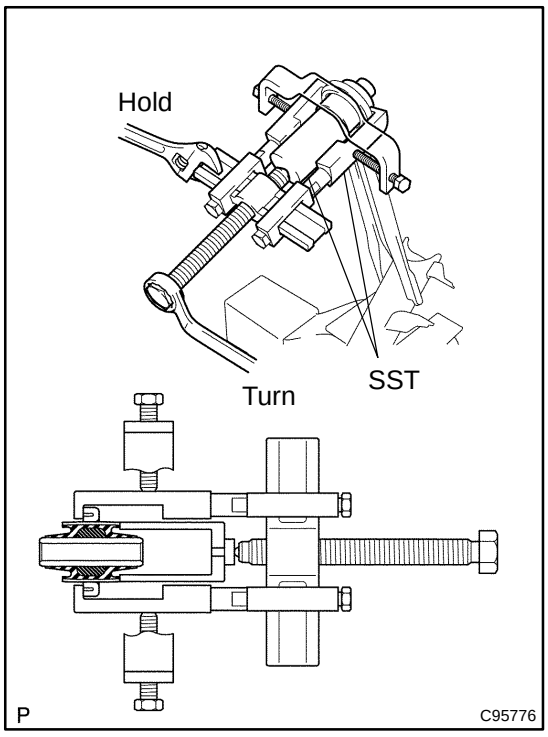

7. REMOVE LOWER CONTROL ARM BUSH

(a) Using SST, remove the lower control arm bush.

SST 09950–40011 (09951–04010, 09952–04010, 09953–04010, 09954–04010, 09955–04051, 09957–04010, 09958–04011), 09632–36010

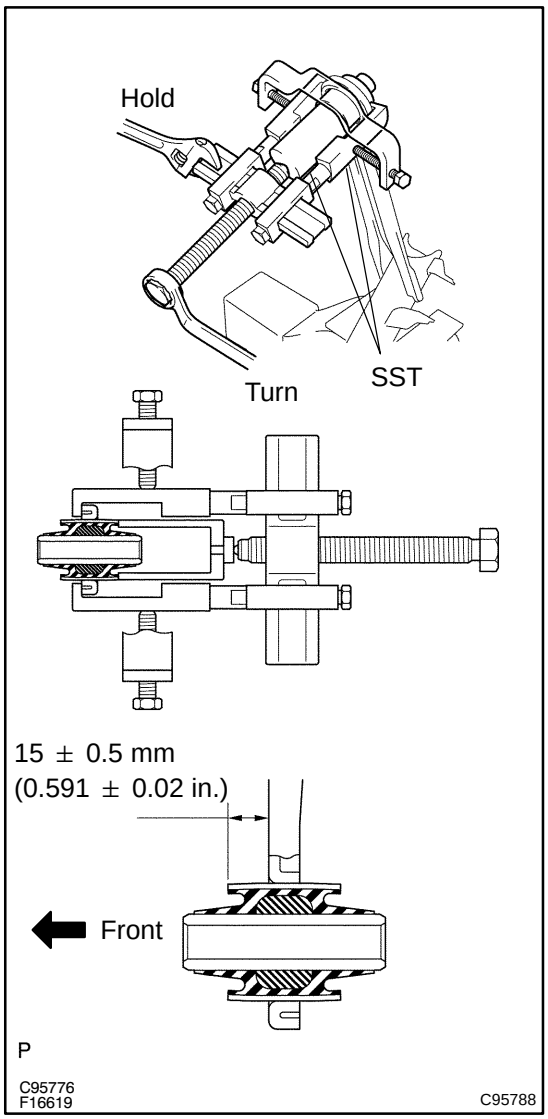

8. INSTALL LOWER CONTROL ARM BUSH

(a) Using SST, install a new lower control arm bush.

SST 09950–40011 (09951–04010, 09952–04010, 09953–04010, 09954–04010, 09955–04051, 09957–04010, 09958–04011), 09632–36010

NOTICE:

- **Do not install the lower control arm bush with it facing in the wrong direction.**
- **Place the lower control arm bush at the position in the illustration.**

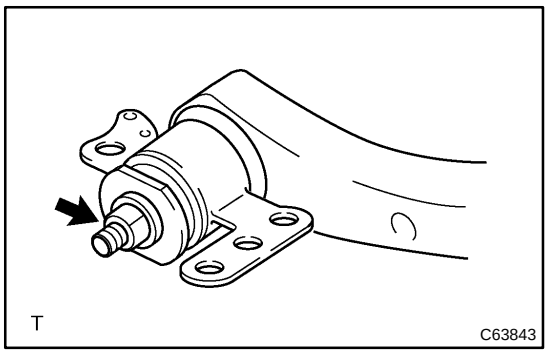

9. INSTALL REAR SUSPENSION ARM ASSY NO.1 LH

(a) Install the rear suspension support stopper and rear suspension arm bracket assy LH, temporarily tighten a new nut.

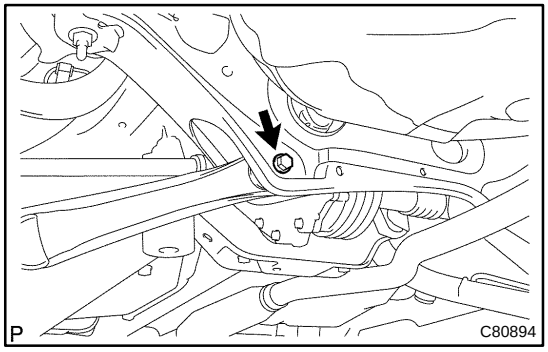

(b) Install the rear side rear suspension arm assy No.1 LH, temporarily tighten bolt and nut.

NOTICE:

When installing the bolt, stop the nut from rotating and tighten the bolt.

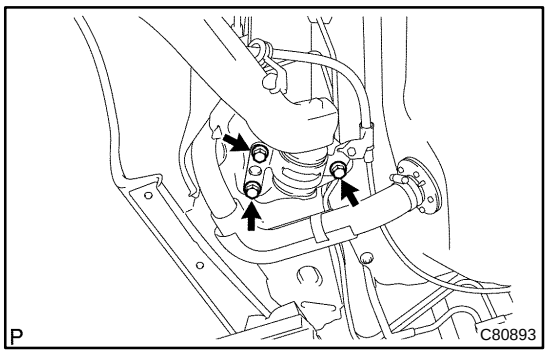

(c) Install the 3 bolts.
Torque: 65 N·m (663 kgf·cm, 48 ft·lbf)

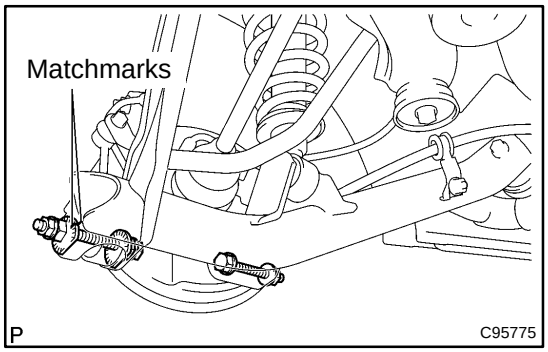

(d) Install the axle carrier to the rear suspension arm assy No.1 LH, temporarily tighten a new bolt and nut.
(e) Insert the rear suspension toe adjust cam sub–assy into the front side of the vehicle, temporarily tighten with nut through the rear suspension toe adjust plate No.2.

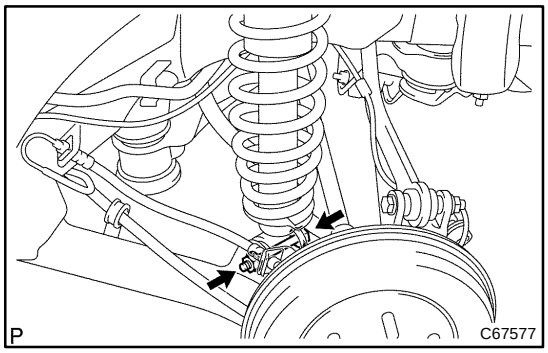

(f) Install the rear shock absorber with coil spring to the rear suspension arm assy No.1 LH, temporarily tighten the bolt and nut.

10. INSTALL REAR STABILIZER LINK ASSY LH (See page 30–66)
11. INSTALL REAR STABILIZER LINK ASSY RH
HINT:
Install the RH side by the same procedures as the LH side.

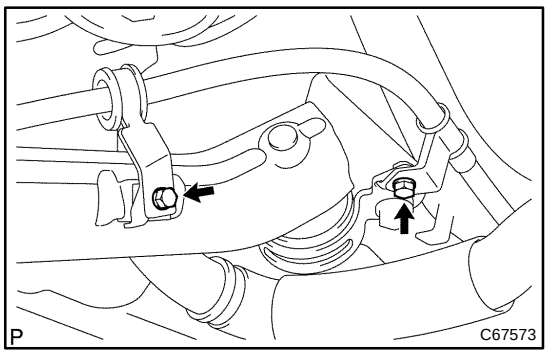

12. CONNECT PARKING BRAKE CABLE ASSY NO.3
(a) Connect the parking brake cable assy No.3 with the 2 bolts.
Torque: 5.4 N·m (55 kgf·cm, 48 in.·lbf)

13. CONNECT PARKING BRAKE CABLE ASSY NO.2
HINT:
Connect the RH side by the same procedures as the LH side.
14. STABILIZE SUSPENSION (See page 27–16)

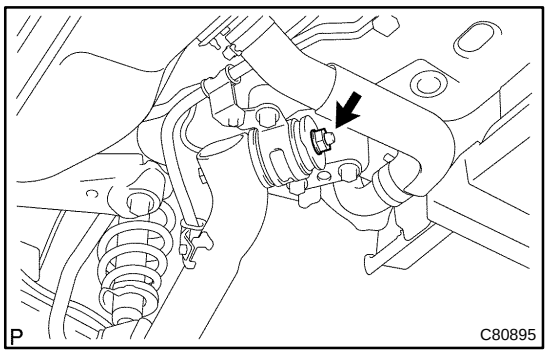

15. FULLY TIGHTEN REAR SUSPENSION ARM ASSY NO.1 LH

(a) Fully tighten the nut.
Torque: 110 N·m (1,122 kgf·cm, 81 ft·lbf)

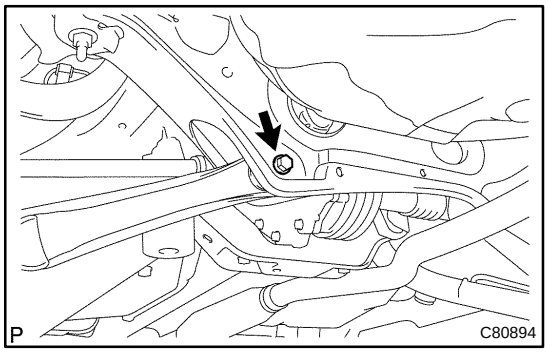

(b) Fully tighten the bolt.
Torque: 74 N·m (755 kgf·cm, 55 ft·lbf)

NOTICE:
When installing the bolt, stop the nut from rotating and tighten the bolt.

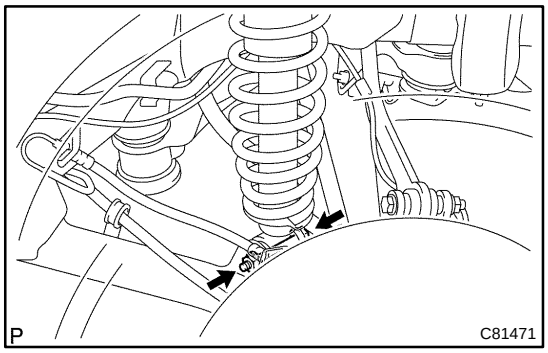

(c) Fully tighten the bolt and nut.
Torque: 140 N·m (1,428 kgf·cm, 103 ft·lbf)

NOTICE:
When installing the bolt, stop the nut from rotating and tighten the bolt.

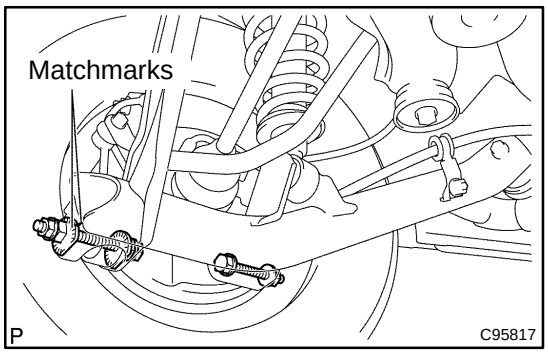

(d) Align the matchmarks on the rear suspension toe adjust plate No.2 and fully tighten the nut.
Torque: 74 N·m (755 kgf·cm, 55 ft·lbf)

(e) Fully tighten the front side bolt and nut.
Torque: 74 N·m (755 kgf·cm, 55 ft·lbf)

16. INSPECT AND ADJUST REAR WHEEL ALIGNMENT (See page 27–7)

STABILIZER BAR REAR (FF)

27086–01

REPLACEMENT

HINT:

COMPONENTS: See page 27–2

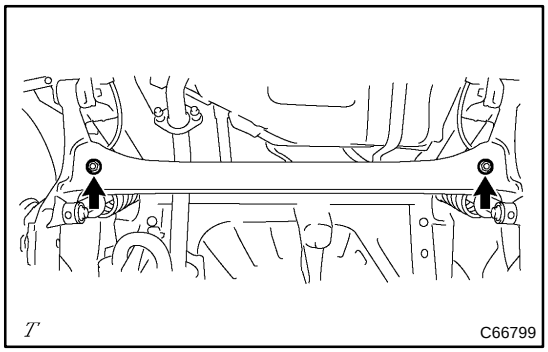

1. REMOVE STABILIZER BAR REAR

(a) Remove the 2 bolts, nuts and stabilizer bar rear.

2. INSTALL STABILIZER BAR REAR

(a) Install the 2 bolts, nuts and stabilizer bar rear.

Torque: 195 N·m (1,988 kgf·cm, 144 ft·lbf)

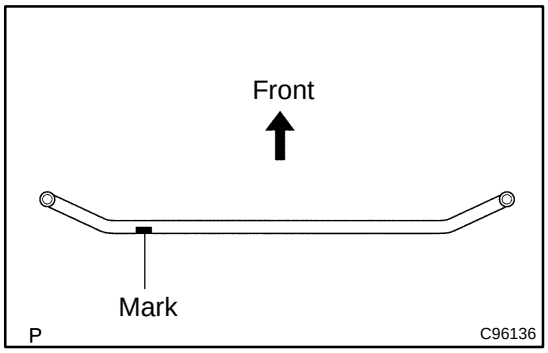

HINT:

Install the stabilizer bar rear so that the mark is positioned on the rear left side of the vehicle.

STABILIZER BAR REAR (4WD)

27087–01

REPLACEMENT

HINT:

COMPONENTS: See page 27–2.

1. REMOVE REAR WHEEL

2. REMOVE EXHAUST PIPE (See page 15–4)

3. REMOVE PROPELLER W/CENTER BEARING SHAFT ASSY (See page 30–6)

SST 09325–20010

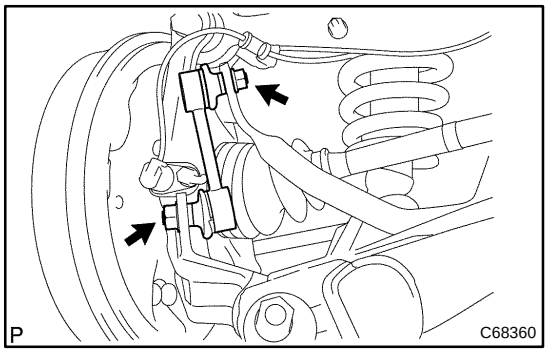

4. REMOVE REAR STABILIZER LINK ASSY LH

(a) Remove the 2 nuts and rear stabilizer link assy LH.

HINT:

If ball joint turns together with the nut, use a hexagon (5 mm) wrench to hold the stud.

5. REMOVE REAR STABILIZER LINK ASSY RH

HINT:

Remove the RH side by the same procedures as the LH side.

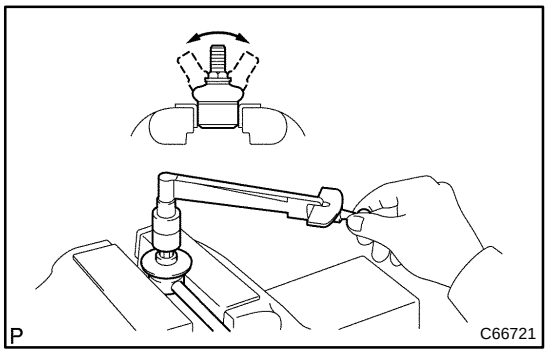

6. INSPECT REAR STABILIZER LINK ASSY LH

(a) As shown in the illustration, flip the ball joint stud back and forth 5 times, before installing the nut.

(b) Using a torque wrench, turn the nut continuously at a rate of 2 – 4 seconds per 1 turn and take the torque reading on the 5th turn.

Turning torque:

0.05 – 1.0 N·m (0.5 – 10 kgf·cm, 0.4 – 8.7 in.·lbf)

NOTICE:

- **Neither abnormal drag nor rattle exists during the rotation.**
- **Neither crack nor grease leakage exists on the dust cover.**

7. REMOVE REAR AXLE SHAFT LH NUT (See page 30–66)

SST 09930–00010

8. REMOVE REAR AXLE SHAFT RH NUT

SST 09930–00010

HINT:

Remove the RH side by the same procedures as the LH side.

9. REMOVE REAR BRAKE DRUM SUB–ASSY

HINT:

Use the same manner described above to the other side.

10. DISCONNECT SPEED SENSOR REAR LH (W/ ABS) (See page 27–32)

11. DISCONNECT SPEED SENSOR REAR RH (W/ ABS)

HINT:

Disconnect the RH side by the same procedures as the LH side.

12. REMOVE FRONT BRAKE SHOE (See page 32–41)

SST 09718–00010

HINT:

Use the same manner described above to the other side.

13. REMOVE PARKING BRAKE SHOE STRUT SET LH (See page 32–41)

SST 09703–30010

14. REMOVE PARKING BRAKE SHOE STRUT SET RH

SST 09703–30010

HINT:

Remove the RH side by the same procedures as the LH side.

15. REMOVE REAR BRAKE SHOE (See page 32–41)

SST 09718–00010

HINT:

Use the same manner described above to the other side.

16. DISCONNECT PARKING BRAKE CABLE ASSY NO.3 (See page 27–27)

17. DISCONNECT PARKING BRAKE CABLE ASSY NO.2

HINT:

Disconnect the RH side by the same procedures as the LH side.

18. DISCONNECT REAR BRAKE TUBE NO.4 (See page 30–66)

SST 09023–00100

19. DISCONNECT REAR BRAKE TUBE NO.3

SST 09023–00100

HINT:

Disconnect the RH side by the same procedures as the LH side.

20. SEPARATE REAR SUSPENSION ARM ASSY NO.1 LH (See page 30–66)

21. SEPARATE REAR SUSPENSION ARM ASSY NO.1 RH

HINT:

Separate the RH side by the same procedures as the LH side.

22. SEPARATE UPPER CONTROL ARM ASSY (See page 27–32)

HINT:

Separate the RH side by the same procedures as the LH side.

23. REMOVE REAR AXLE ASSY LH (See page 30–66)

24. REMOVE REAR AXLE ASSY RH

HINT:

Remove the RH side by the same procedures as the LH side.

25. REMOVE REAR SUSPENSION ARM ASSY NO.1 LH (See page 27–27)

26. REMOVE REAR SUSPENSION ARM ASSY NO.1 RH

HINT:

Remove the RH side by the same procedures as the LH side.

27. REMOVE REAR SUSPENSION MEMBER SUB–ASSY (See page 27–32)

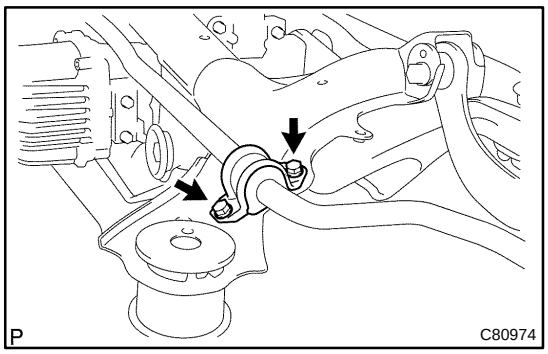

28. REMOVE STABILIZER BAR REAR

(a) Remove the 4 bolts, 2 rear stabilizer bar bracket No.1 from the rear suspension member sub–assy.

(b) Remove the 2 stabilizer bush rear from the stabilizer bar rear.

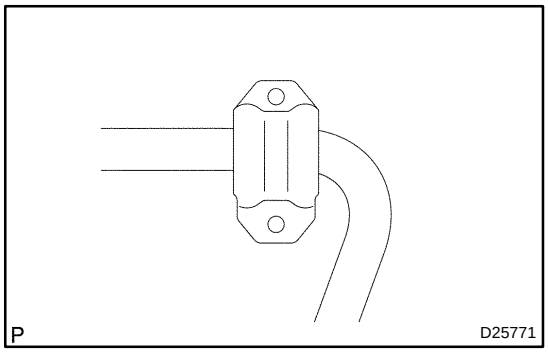

29. INSTALL STABILIZER BAR REAR

(a) Install the 2 stabilizer bush rear to the stabilizer bar rear.

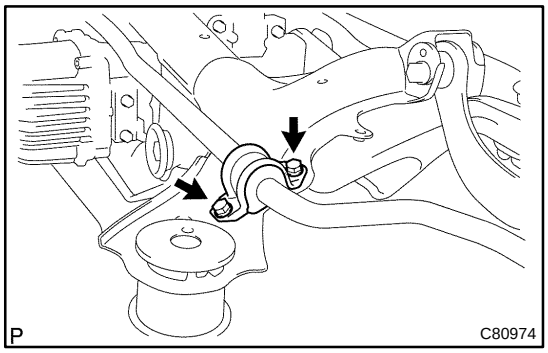

(b) Install the stabilizer bar rear with 4 bolts.
Torque: 18 N·m (184 kgf·cm, 13 ft·lbf)

30. INSTALL REAR SUSPENSION MEMBER SUB–ASSY (See page 27–32)

31. TEMPORARY TIGHTEN UPPER CONTROL ARM ASSY (See page 27–32)

HINT:

Temporarily tighten the RH side by the same procedures as the LH side.

32. INSTALL REAR AXLE ASSY LH (See page 30–66)

33. INSTALL REAR AXLE ASSY RH

HINT:

Install the RH side by the same procedures as the LH side.

34. INSTALL REAR SUSPENSION ARM ASSY NO.1 LH (See page 27–27)

35. INSTALL REAR SUSPENSION ARM ASSY NO.1 RH

HINT:

Install the RH side by the same procedures as the LH side.

36. CONNECT REAR BRAKE TUBE NO.4 (See page 30–66)

SST 09023–00100

37. CONNECT REAR BRAKE TUBE NO.3

HINT:

Connect the RH side by the same procedures as the LH side.

SST 09023–00100

38. CONNECT PARKING BRAKE CABLE ASSY NO.3 (See page 27–27)

39. CONNECT PARKING BRAKE CABLE ASSY NO.2

HINT:
Connect the RH side by the same procedures as the LH side.

40. APPLICATION HIGH TEMPERATURE GREASE (See page 32–41)

41. INSTALL REAR BRAKE SHOE (See page 32–41)

SST 09718–00010

HINT:
Use the same manner described above to the other side.

42. INSTALL PARKING BRAKE SHOE STRUT SET LH (See page 32–41)

SST 09703–30010

43. INSTALL PARKING BRAKE SHOE STRUT SET RH

SST 09703–30010

HINT:
Install the RH side by the same procedures as the LH side.

44. INSTALL FRONT BRAKE SHOE (See page 32–41)

SST 09718–00010

HINT:
Use the same manner described above to the other side.

45. CHECK REAR DRUM BRAKE INSTALLATION (See page 32–41)

46. CONNECT SPEED SENSOR REAR LH (W/ ABS) (See page 27–32)

47. CONNECT SPEED SENSOR REAR RH (W/ ABS)

HINT:
Connect the RH side by the same procedures as the LH side.

48. INSTALL REAR BRAKE DRUM SUB–ASSY

49. ADJUST REAR DRUM BRAKE SHOE CLEARANCE (See page 32–41)

50. INSTALL REAR AXLE SHAFT LH NUT (See page 30–66)

51. INSTALL REAR AXLE SHAFT RH NUT

HINT:
Install the RH side by the same procedures as the LH side.

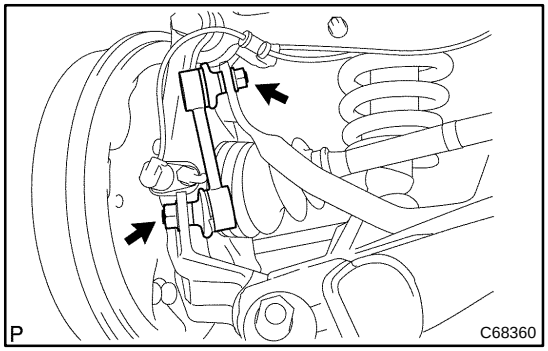

52. INSTALL REAR STABILIZER LINK ASSY LH

(a) Install the rear stabilizer link assy LH with 2 nuts.
Torque: 44 N·m (449 kgf·cm, 32 ft·lbf)

HINT:
If ball joint turns together with the nut, use a hexagon (5 mm) wrench to hold the stud.

53. INSTALL REAR STABILIZER LINK ASSY RH

HINT:
Install the RH side by the same procedures as the LH side.

54. TEMPORARY TIGHTEN PROPELLER W/CENTER BEARING SHAFT ASSY (See page 30–6)

55. FULLY TIGHTEN PROPELLER W/CENTER BEARING SHAFT ASSY (See page 30–6)

56. INSTALL EXHAUST PIPE (See page 15–4)

57. CHECK EXHAUST GAS LEAK

58. STABILIZE SUSPENSION (See page 27–16)

59. FULLY TIGHTEN UPPER CONTROL ARM ASSY (See page 27–32)

HINT:

Use the same manner described above to the other side.

60. FULLY TIGHTEN REAR SUSPENSION ARM ASSY NO.1 LH (See page 27–27)

61. FULLY TIGHTEN REAR SUSPENSION ARM ASSY NO.1 RH

HINT:

Fully tighten the RH side by the same procedures as the LH side.

62. BLEED BRAKE LINE (See page 32–6)

63. INSPECT PARKING BRAKE LEVER TRAVEL (See page 33–2)

64. ADJUST PARKING BRAKE LEVER TRAVEL (See page 33–2)

65. INSPECT AND ADJUST REAR WHEEL ALIGNMENT (See page 27–7)

66. CHECK ABS SPEED SENSOR SIGNAL (W/ ABS) (See page 05–316)

REAR AXLE BEAM ASSY (FF)

27083–01

REPLACEMENT

HINT:

COMPONENTS: See page 27–2

1. REMOVE REAR WHEEL

2. SEPARATE REAR DISC BRAKE CALIPER ASSY LH (DISC REAR BRAKE TYPE) (See Page 30–63)

3. SEPARATE REAR DISC BRAKE CALIPER ASSY RH (DISC REAR BRAKE TYPE) (See Page 30–63)

4. REMOVE REAR DISC (DISC REAR BRAKE TYPE)

HINT:

Use the same manner described above to the other side.

5. REMOVE REAR BRAKE DRUM SUB–ASSY (DRUM REAR BRAKE TYPE)

HINT:

Use the same manner described above to the other side.

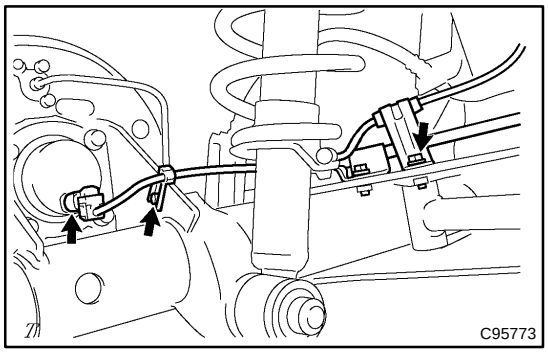

6. DISCONNECT SKID CONTROL SENSOR WIRE (W/ ABS)

(a) Disconnect the skid control sensor connector.

(b) Remove the bolt and clip, disconnect the skid control sensor wire.

(c) Use the same manner described above to the other side.

7. DISCONNECT PARKING BRAKE CABLE ASSY NO.3

(a) Remove the bolt, disconnect parking brake cable No.3.

8. DISCONNECT PARKING BRAKE CABLE ASSY NO.2

(a) Remove the bolt, disconnect parking brake cable No.2.

9. REMOVE STABILIZER BAR REAR (See Page 27–38)

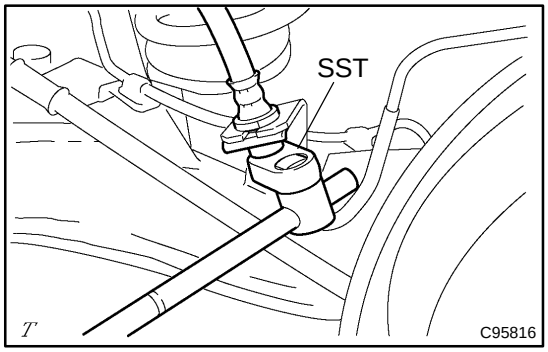

10. DISCONNECT REAR BRAKE TUBE NO.4 (DRUM REAR BRAKE TYPE)

(a) Using SST, disconnect the rear brake tube No.4 from the flexible hose. Use a container to catch brake fluid as it drains out.

SST 09023–00100

(b) Remove the clip and disconnect the flexible hose.

11. DISCONNECT REAR BRAKE TUBE NO.3 (DRUM REAR BRAKE TYPE)

SST 09023–00100

HINT:

Disconnect the RH side by the same procedures as the LH side.

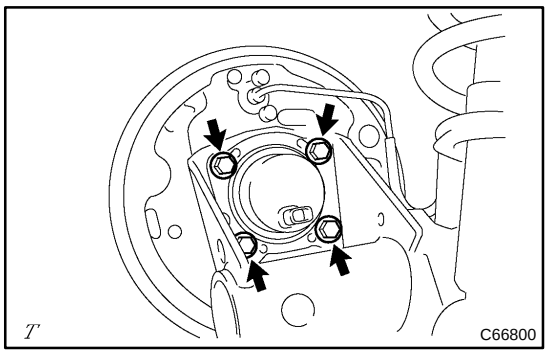

12. REMOVE REAR AXLE HUB & BEARING ASSY LH

(a) Remove the 4 bolts and rear axle hub from the rear axle beam assy.

13. REMOVE REAR AXLE HUB & BEARING ASSY RH

HINT:

Remove the RH side by the same procedures as the LH side.

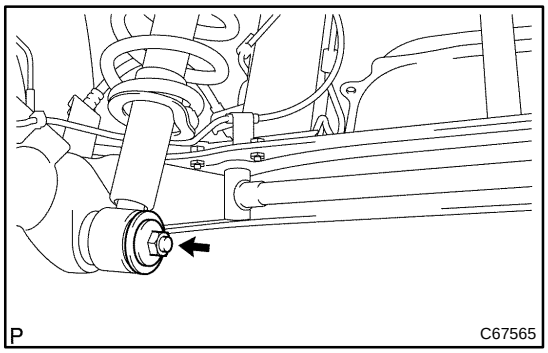

14. SEPARATE REAR SHOCK ABSORBER WITH COIL SPRING

(a) Remove the nut and rear shock absorber LH cushion retainer, separate the rear shock absorber with coil spring from the rear axle beam assy.

(b) Use the same manner described above to the other side.

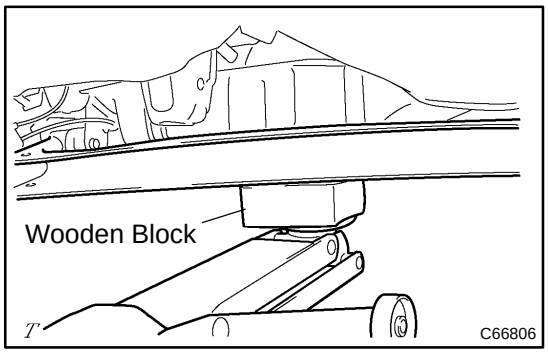

15. REMOVE REAR AXLE BEAM ASSY

(a) Support the rear axle beam assy with jack.

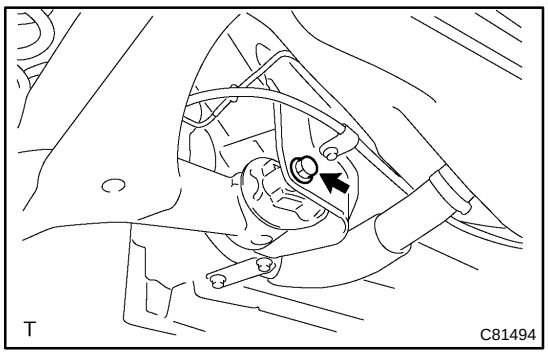

(b) Remove the 2 bolts, 2 nuts and rear axle beam assy.

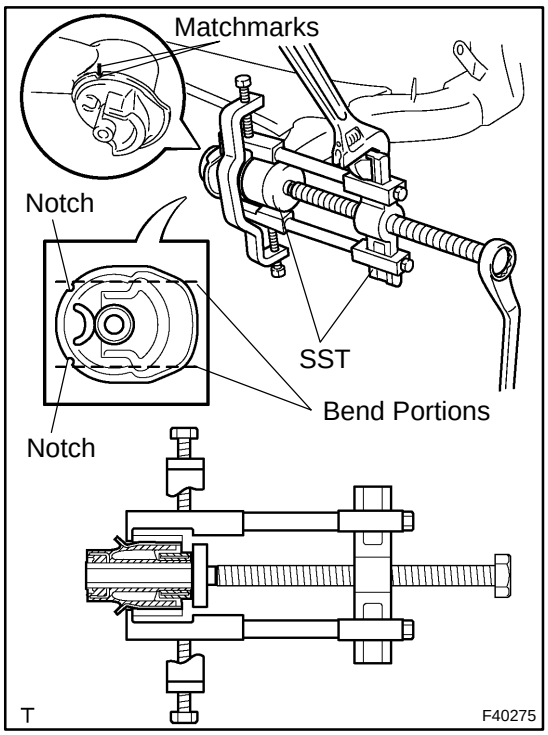

16. REMOVE REAR AXLE CARRIER BUSH LH

(a) Make matchmarks on the 2 notches of the bushing and axle beam.

(b) Using a chisel and a hammer, bend the 2 portions of the bushing rib.

HINT:

Bend the bushing rib until the claw of SST can be hung.

(c) Using SST, remove the bushing from the axle beam.

SST 09950–40011 (09951–04020, 09952–04010, 09953–04030, 09954–04020, 09955–04051, 09957–04010, 09958–04011), 09950–60010 (09951–00630)

NOTICE:

If the rear axle beam assy has been scratched, apply the paint.

17. REMOVE REAR AXLE CARRIER BUSH RH

SST 09950–40011 (09951–04020, 09952–04010, 09953–04030, 09954–04020, 09955–04051, 09957–04010, 09958–04011), 09950–60010 (09951–00630)

HINT:

Remove the RH side by the same procedures as the LH side.

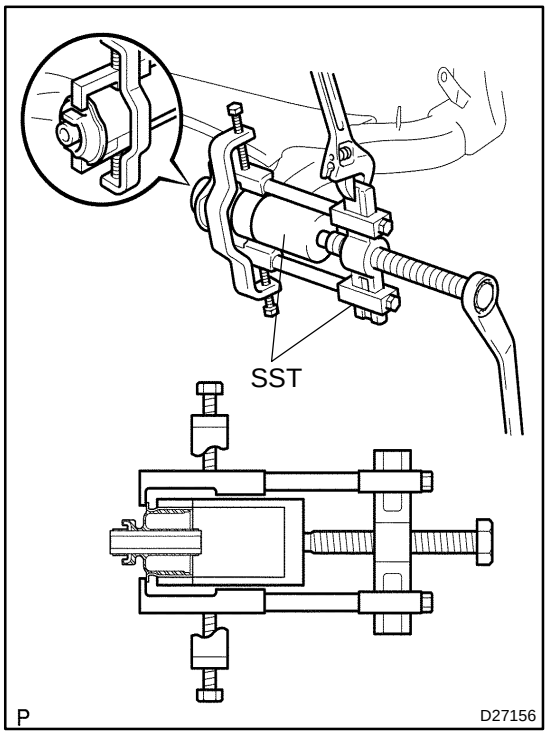

18. INSTALL REAR AXLE CARRIER BUSH LH

(a) Align the matchmarks on the rear axle beam assy with the 2 notches of a new bushing and temporarily install the bushing to the rear axle beam assy.

(b) Using SST, install the bushing to the axle beam.

SST 09950–40011 (09951–04020, 09952–04010, 09953–04030, 09954–04020, 09955–04051, 09957–04010, 09958–04011), 09950–60010 (09951–00620), 09710–04101

NOTICE:

- **Hang the claw of SST to the bushing deeply and firmly.**
- **Do not scratch the rubber portion of the bushing.**
- **Do not deform the bushing rib.**

19. INSTALL REAR AXLE CARRIER BUSH RH

SST 09950–40011 (09951–04020, 09952–04010, 09953–04030, 09954–04020, 09955–04051, 09957–04010, 09958–04011), 09950–60010 (09951–00620), 09710–04101

HINT:

Install the RH side by the same procedures as the LH side.

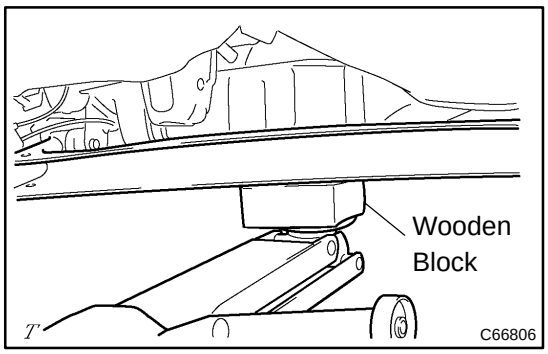

20. TEMPORARY TIGHTEN REAR AXLE BEAM ASSY

(a) Support the rear axle beam assy with jack.

(b) Install the rear axle beam assy and 2 bolts, temporarily tighten the 2 nuts.

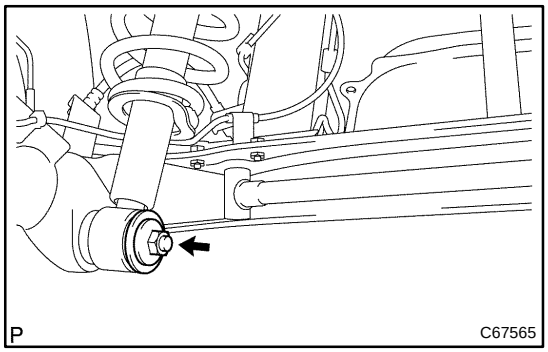

21. TEMPORARY TIGHTEN REAR SHOCK ABSORBER WITH COIL SPRING

(a) Install the rear shock absorber with coil spring and rear shock absorber LH cushion retainer, temporarily tighten the nut.

(b) Using the same manner described above to the other side.

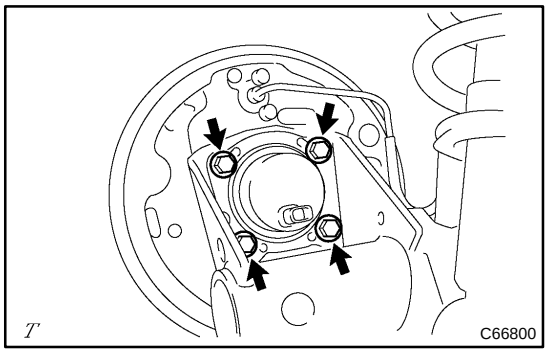

22. INSTALL REAR AXLE HUB & BEARING ASSY LH

(a) Install the rear axle hub with the 4 bolts.
Torque: 61 N·m (622 kgf·cm, 45 ft·lbf)

23. INSTALL REAR AXLE HUB & BEARING ASSY RH

HINT:
Install the RH side by the same procedures as the LH side.

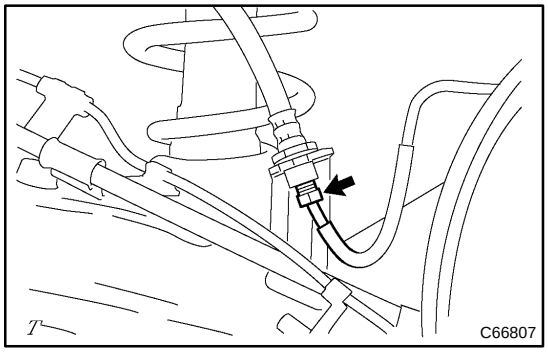

24. CONNECT REAR BRAKE TUBE NO.4 (DRUM REAR BRAKE TYPE)

(a) Temporarily tighten the rear brake tube No.4 and flexible hose.

(b) Connect the rear brake tube No.4 with the clip to the rear axle beam assy.

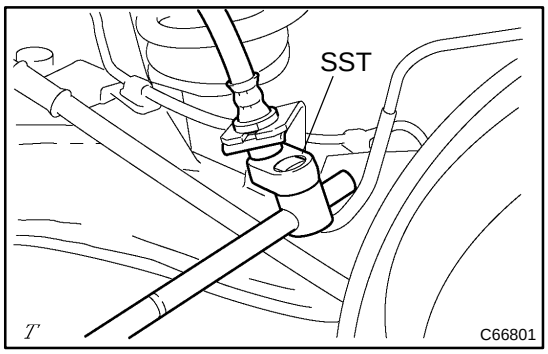

(c) Using SST, fully tighten the rear brake tube No.4.
SST 09023–00100
Torque: 15.2 N·m (155 kgf·cm, 11 ft·lbf)

25. CONNECT REAR BRAKE TUBE NO.3 (DRUM REAR BRAKE TYPE)
SST 09023–00100

HINT:
Connect the RH side by the same procedures as the LH side.

26. INSTALL STABILIZER BAR REAR (See page 27–38)

27. CONNECT PARKING BRAKE CABLE ASSY NO.3

(a) Connect the parking brake cable No.3 with the bolt.
Torque: 5.4 N·m (55 kgf·cm, 48 in.·lbf)

28. CONNECT PARKING BRAKE CABLE ASSY NO.2

(a) Connect the parking brake cable No.2 with the bolt.
Torque: 5.4 N·m (55 kgf·cm, 48 in.·lbf)

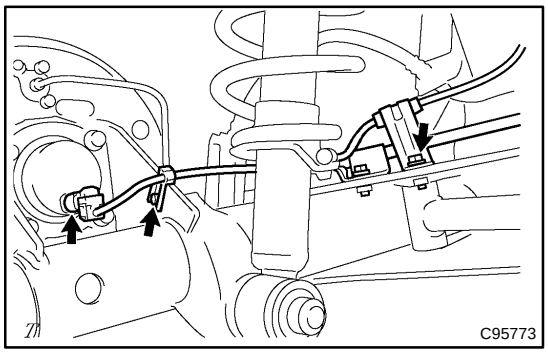

29. CONNECT SKID CONTROL SENSOR WIRE (W/ ABS)

(a) Connect the skid control sensor wire with the bolt and clip.
Torque: 5.0 N·m (51 kgf·cm, 44 in.·lbf)

(b) Connect the skid control sensor connector.

(c) Use the same manner described above to the other side.

30. INSTALL REAR DISC (DISC REAR BRAKE TYPE)

HINT:
Use the same manner described above to the other side.

31. INSTALL REAR DISC BRAKE CALIPER ASSY LH (DISC REAR BRAKE TYPE)
(See Page 30–63)

32. INSTALL REAR DISC BRAKE CALIPER ASSY RH (DISC REAR BRAKE TYPE)
(See Page 30–63)

33. INSTALL REAR BRAKE DRUM SUB–ASSY (DRUM REAR BRAKE TYPE)

HINT:
Use the same manner described above to the other side.

34. STABILIZE SUSPENSION

(a) Install the rear wheel and jack down the vehicle.
Torque: 103 N·m (1,050 kgf·cm, 76 ft·lbf)

(b) Bounce the vehicle up and down several times to stabilize the suspension.

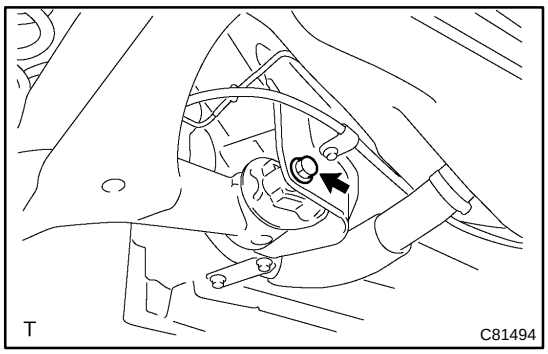

35. FULLY TIGHTEN REAR AXLE BEAM ASSY

(a) Fully tighten the bolt.
Torque: 85 N·m (867 kgf·cm, 63 ft·lbf)

(b) Using the same manner described above to the other side.

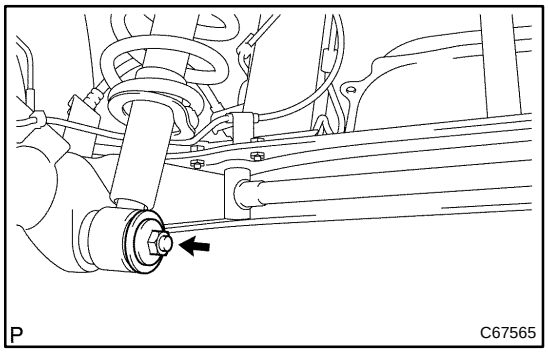

36. FULLY TIGHTEN REAR SHOCK ABSORBER WITH COIL SPRING

(a) Fully tighten the nut.
Torque: 80 N·m (816 kgf·cm, 59 ft·lbf)

(b) Using the same manner described above to the other side.

37. BLEED BRAKE LINE (See page 32–6)
38. INSPECT BRAKE FLUID (See page 32–6)
39. INSPECT REAR WHEEL ALIGNMENT (See page 27–6)
40. CHECK ABS SPEED SENSOR SIGNAL (W/ ABS) (See page 05–316)

UPPER CONTROL ARM ASSY (4WD)

27085–01

REPLACEMENT

HINT:

COMPONENTS: See page 27–2

1. REMOVE REAR WHEEL

2. REMOVE EXHAUST PIPE (See page 15–4)

3. REMOVE PROPELLER W/CENTER BEARING SHAFT ASSY (See page 30–6)

4. SEPARATE REAR STABILIZER LINK ASSY LH (See page 30–66)

5. SEPARATE REAR STABILIZER LINK ASSY RH

HINT:

Separate the RH side by the same procedure as the LH side.

6. REMOVE REAR AXLE SHAFT LH NUT (See page 30–63)

SST 09930–00010

7. REMOVE REAR AXLE SHAFT RH NUT

SST 09930–00010

HINT:

Remove the RH side by the same procedure as the LH side.

8. REMOVE REAR BRAKE DRUM SUB–ASSY

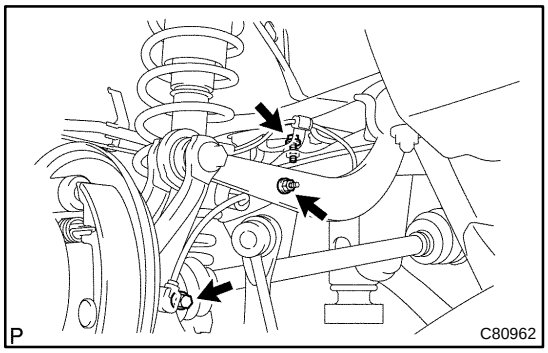

9. DISCONNECT SPEED SENSOR REAR LH (W/ ABS)

(a) Remove the 2 bolts and nut, disconnect the speed sensor rear LH from the upper control arm assy.

10. DISCONNECT SPEED SENSOR REAR RH (W/ ABS)

HINT:

Disconnect the RH side by the same procedure as the LH side.

11. REMOVE FRONT BRAKE SHOE (See page 32–41)

SST 09718–00010

HINT:

Use the same manner described above to the other side.

12. REMOVE PARKING BRAKE SHOE STRUT SET LH (See page 32–41)

SST 09703–30010

13. REMOVE PARKING BRAKE SHOE STRUT SET RH

SST 09703–30010

HINT:

Remove the RH side by the same procedure as the LH side.

14. REMOVE REAR BRAKE SHOE (See page 32–41)

SST 09718–00010

HINT:

Use the same manner described above to the other side.

15. DISCONNECT PARKING BRAKE CABLE ASSY NO.3 (See page 27–27)

16. DISCONNECT PARKING BRAKE CABLE ASSY NO.2

HINT:

Disconnect the RH side by the same procedure as the LH side.

17. DISCONNECT REAR BRAKE TUBE NO.4 (See page 30–66)

SST 09023–00100

18. DISCONNECT REAR BRAKE TUBE NO.3

SST 09023–00100

HINT:

Disconnect the RH side by the same procedure as the LH side.

19. SEPARATE REAR SUSPENSION ARM ASSY NO.1 LH (See page 30–63)

20. SEPARATE REAR SUSPENSION ARM ASSY NO.1 RH

HINT:

Separate the RH side by the same procedure as the LH side.

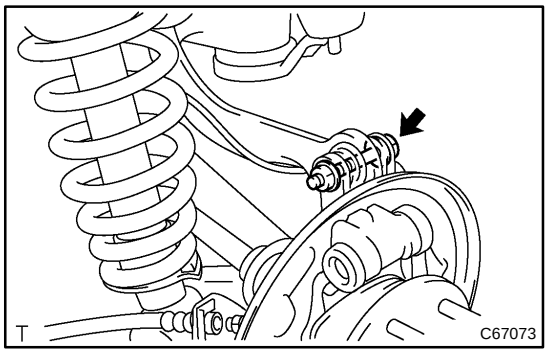

21. SEPARATE UPPER CONTROL ARM ASSY

(a) Remove the bolt and nut, separate the upper control arm assy.

NOTICE:

When removing the bolt, stop the nut from rotating and loosen the bolt.

22. REMOVE REAR AXLE ASSY LH (See page 30–63)

23. REMOVE REAR AXLE ASSY RH

HINT:

Remove the RH side by the same procedure as the LH side.

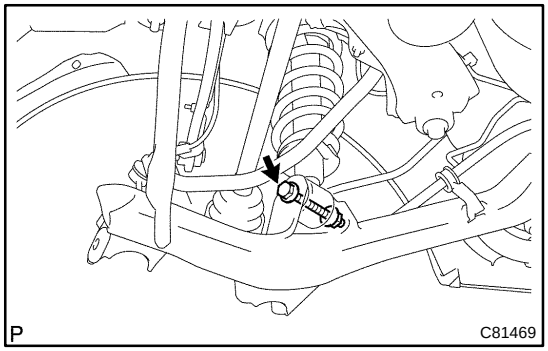

24. REMOVE REAR SUSPENSION ARM ASSY NO.1 LH

(a) Remove the bolt and nut, disconnect the rear shock absorber with coil spring.

NOTICE:

When removing the bolt, stop the nut from rotating and loosen the bolt.

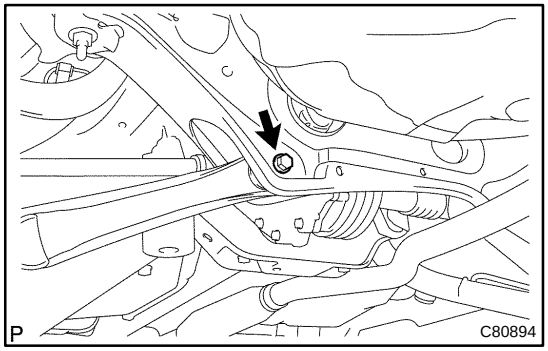

(b) Remove the bolt and nut, disconnect the rear side rear suspension arm assy No.1 LH.

NOTICE:

When removing the bolt, stop the nut from rotating and loosen the bolt.

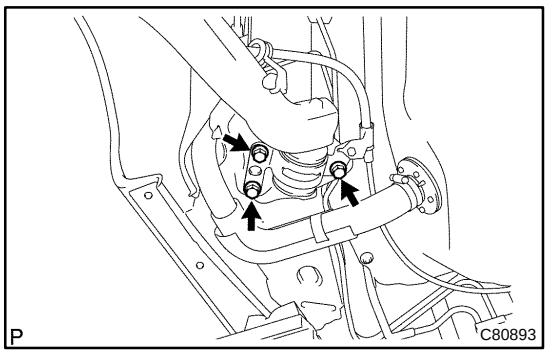

(c) Remove the front side 3 bolts and rear suspension arm assy No.1 LH.

25. REMOVE REAR SUSPENSION ARM ASSY NO.1 RH

HINT:

Remove the RH side by the same procedure as the LH side.

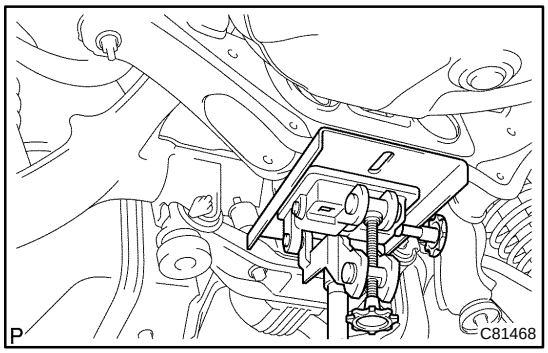

26. REMOVE REAR SUSPENSION MEMBER SUB–ASSY

(a) Lower the rear suspension member sub–assy with a jack.

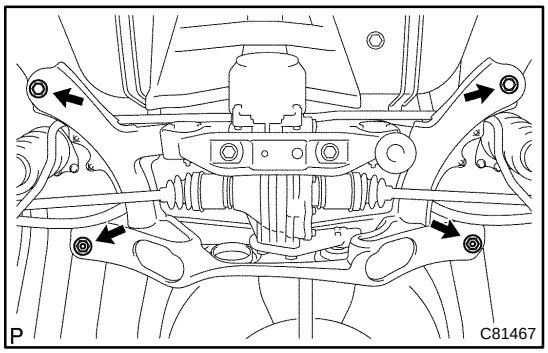

(b) Remove the 2 bolts and 2 nuts from the rear suspension member sub–assy.

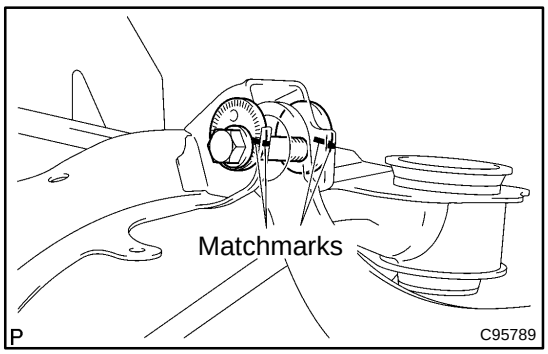

27. REMOVE UPPER CONTROL ARM ASSY

(a) Make matchmarks on the camber adjust cam assy, camber adjust cam No.2 and rear suspension member sub–assy.

(b) Remove the nut, camber adjust cam assy and camber adjust cam No.2.

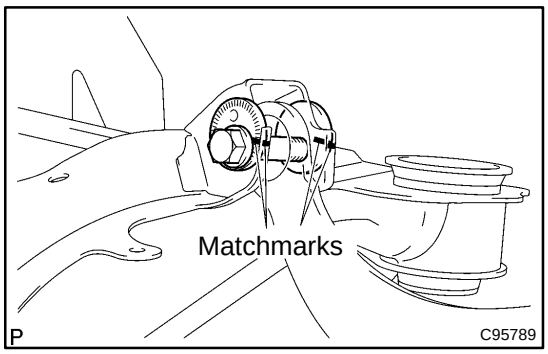

28. INSTALL UPPER CONTROL ARM ASSY

(a) Insert the camber adjust cam assy from the front side of the vehicle, temporarily tighten with nut through the camber adjust cam No.2.

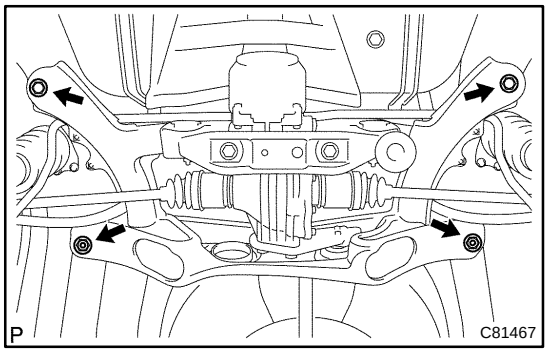

29. INSTALL REAR SUSPENSION MEMBER SUB–ASSY

(a) Install the rear suspension member sub–assy with 2 bolts and 2 nuts.

Torque: 105 N·m (1,071 kgf·cm, 77 ft·lbf)

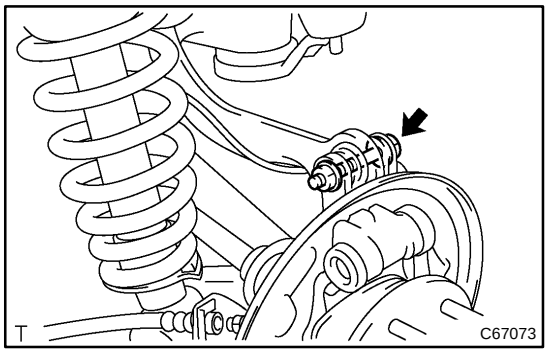

30. TEMPORARY TIGHTEN UPPER CONTROL ARM ASSY

(a) Install the upper control arm assy, temporarily tighten the bolt and nut.

31. INSTALL REAR AXLE ASSY LH (See page 30–63)

32. INSTALL REAR AXLE ASSY RH

HINT:

Install the RH side by the same procedure as the LH side.

33. INSTALL REAR SUSPENSION ARM ASSY NO.1 LH (See page 30–63)

34. INSTALL REAR SUSPENSION ARM ASSY NO.1 RH

HINT:

Install the RH side by the same procedure as the LH side.

35. CONNECT REAR BRAKE TUBE NO.4 (See page 30–66)

SST 09023–00100

36. CONNECT REAR BRAKE TUBE NO.3

SST 09023–00100

HINT:

Connect the RH side by the same procedure as the LH side.

37. CONNECT PARKING BRAKE CABLE ASSY NO.3 (See page 27–27)

38. CONNECT PARKING BRAKE CABLE ASSY NO.2

HINT:

Connect the RH side by the same procedure as the LH side.

39. APPLICATION HIGH TEMPERATURE GREASE (See page 32–41)

40. INSTALL REAR BRAKE SHOE (See page 32–41)

SST 09718–00010

HINT:

Use the same manner described above to the other side.

41. INSTALL PARKING BRAKE SHOE STRUT SET LH (See page 32–41)

SST 09703–30010

42. INSTALL PARKING BRAKE SHOE STRUT SET RH

SST 09703–30010

HINT:

Install the RH side by the same procedure as the LH side.

43. INSTALL FRONT BRAKE SHOE (See page 32–41)

SST 09718–00010

HINT:

Use the same manner described above to the other side.

44. CHECK REAR DRUM BRAKE INSTALLATION (See page 32–41)

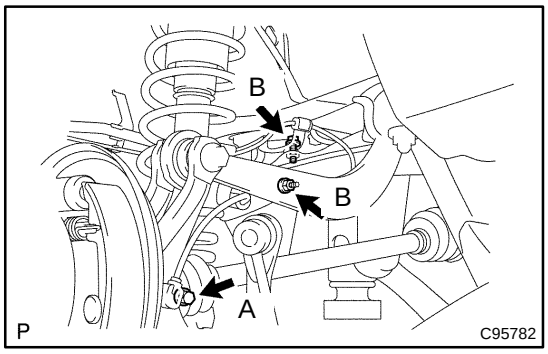

45. CONNECT SPEED SENSOR REAR LH (W/ ABS)

(a) Connect the speed sensor rear LH with 2 bolts and nut.

Torque:

A: 8.0 N·m (82 kgf·cm, 71 in·lbf)

B: 5.0 N·m (51 kgf·cm, 44 in·lbf)

46. CONNECT SPEED SENSOR REAR RH (W/ ABS)

HINT:

Connect the RH side by the same procedure as the LH side.

47. INSTALL REAR BRAKE DRUM SUB–ASSY

48. ADJUST REAR DRUM BRAKE SHOE CLEARANCE (See page 32–41)

49. INSTALL REAR AXLE SHAFT LH NUT (See page 30–63)

50. INSTALL REAR AXLE SHAFT RH NUT

HINT:

Install the RH side by the same procedure as the LH side.

51. INSTALL REAR STABILIZER LINK ASSY LH (See page 30–66)

52. INSTALL REAR STABILIZER LINK ASSY RH

HINT:

Install the RH side by the same procedure as the LH side.

53. TEMPORARY TIGHTEN PROPELLER W/CENTER BEARING SHAFT ASSY (See page 30–6)

54. FULLY TIGHTEN PROPELLER W/CENTER BEARING SHAFT ASSY (See page 30–6)

55. INSTALL EXHAUST PIPE (See page 15–4)

56. CHECK EXHAUST GAS LEAK

57. STABILIZE SUSPENSION (See page 27–16)

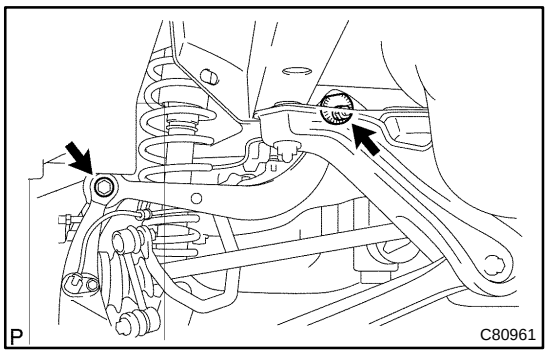

58. FULLY TIGHTEN UPPER CONTROL ARM ASSY

(a) Fully tighten the bolt and nut.

Torque: 74 N·m (755 kgf·cm, 55 ft·lbf)

NOTICE:

When installing the bolt, stop the nut from rotating and tighten the bolt.

(b) Align the matchmarks on the camber adjust cam No.2, fully tighten the nut.

Torque: 74 N·m (755 kgf·cm, 55 ft·lbf)

59. FULLY TIGHTEN REAR SUSPENSION ARM ASSY NO.1 LH (See page 30–63)

60. FULLY TIGHTEN REAR SUSPENSION ARM ASSY NO.1 RH

HINT:

Fully tighten the RH side by the same procedure as the LH side.

61. BLEED BRAKE LINE (See page 32–6)

62. INSPECT PARKING BRAKE LEVER TRAVEL (See page 33–2)

63. ADJUST PARKING BRAKE LEVER TRAVEL (See page 33–2)

64. INSPECT AND ADJUST REAR WHEEL ALIGNMENT (See page 27–7)

65. CHECK ABS SPEED SENSOR SIGNAL (W/ ABS) (See page 05–316)

WHEEL AND TIRE SYSTEM

28027–03

INSPECTION

1. INSPECT TIRE

(a) Check the tires for wear and proper inflation pressure.

Cold tire inflation pressure:

Tire size	Front kPa (kgf/cm^2, psi)	Rear kPa (kgf/cm^2, psi)
2WD: P205/55R16 89H P215/50ZR17	220 (2.2, 32)	220 (2.2, 32)
4WD: P205/55R16 89H	240 (2.4, 35)	220 (2.2, 32)

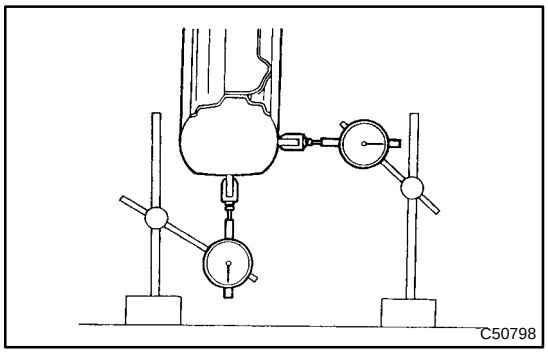

(b) Using a dial indicator, check the tire runout.

Tire runout: 3.0 mm (0.118 in.) or less

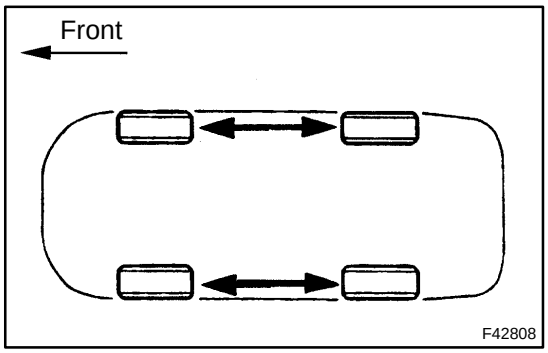

2. ROTATE TIRE

HINT:

See the illustration for where to rotate each tire.

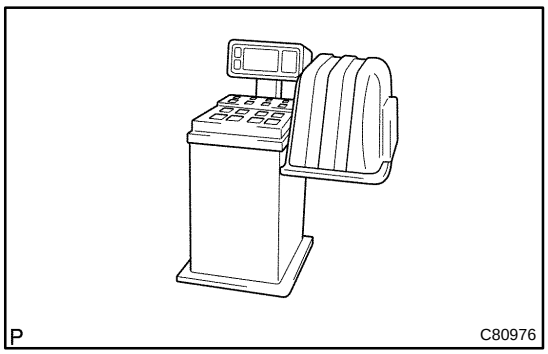

3. INSPECT WHEEL BALANCE

(a) Check and adjust the Off–the–car balance.

(b) If necessary, check and adjust the On–the–car balance.

Imbalance after adjustment: 8.0 g (0.018 lb) or less

4. INSPECT BEARING BACKLASH(See page 30–3)

5. INSPECT AXLE HUB DEVIATION(See page 30–3)

DIFFERENTIAL SYSTEM (4WD)

2904J–01

PRECAUTION

1. **Before disassembly, clean the outside of the rear differential assy and remove any sand or mud to prevent it from entering the inside of the assembly during disassembly and installation.**
2. **When removing a connected part made of light alloy such as a rear differential carrier cover, tap it off with a plastic hammer. Do not attempt to pry it off with a screwdriver.**
3. **Always arrange disassembled parts in order and protect them from dust.**
4. **Before installation, thoroughly clean and dry each part and then apply hypoid gear oil API GL–5 to it. Do not use alkaline cleaner for aluminum or rubber parts and ring gear set bolts. Also, do not clean rubber parts such as O–rings or oil seals with white gasoline.**
5. **Coat any sliding surface and rotating part with hypoid gear oil API GL–5.**
6. **When holding a component part by vice, be sure to place an aluminum sheet under the part. Do not put it directly on the vice.**
7. **Be careful not to damage the contact surfaces of the case. Such damage may cause oil leakage.**
8. **Before applying sealant, remove deposited oil sealant and clean the part to be sealed using white gasoline.**
9. **Do not supply oil immediately after installing sealed parts. Leave it for at least an hour.**
10. **Damage on the surface being contact with an oil seal, O–ring or gasket may cause oil leakage. Special attention should be paid.**
11. **When press–fitting and oil seal, be careful not to damage the oil seal lip and outside periphery.**
12. **When replacing a bearing, replace the inner and outer races as a set.**

2904K–01

PROBLEM SYMPTOMS TABLE

Use the table below to help you find the cause of the problem. The numbers indicate the priority of the likely cause of the problem. Check each part in order. If necessary, replace these parts.

Symptom	Suspect Area	See page
Oil leak from rear differential	5. Oil level (Too high or wrong grade) 6. Rear differential front oil seal (Worn or damaged) 7. Side gear oil seal (Worn or damaged)	29–7 29–8 29–10
Noise in rear differential	1. Oil level (Low or wrong grade) 2. Excessive backlash between pinion and ring gear 3. Ring, pinion or side gears (Worn or chipped) 4. Drive pinion bearing 5. Side bearing (Worn)	29–7 29–12 29–12 29–12 29–12

DIFFERENTIAL (4WD)

COMPONENTS

2904L–01

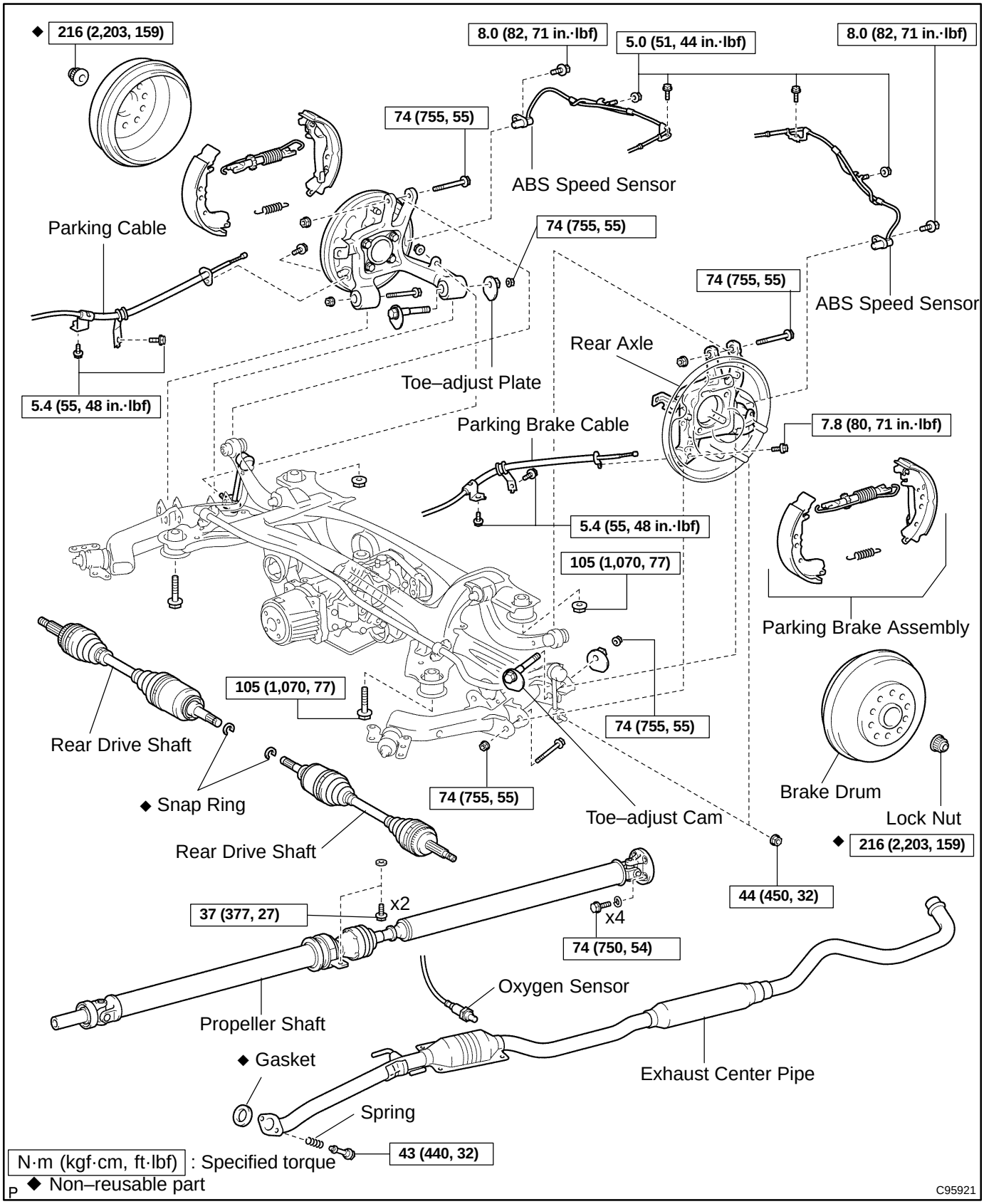

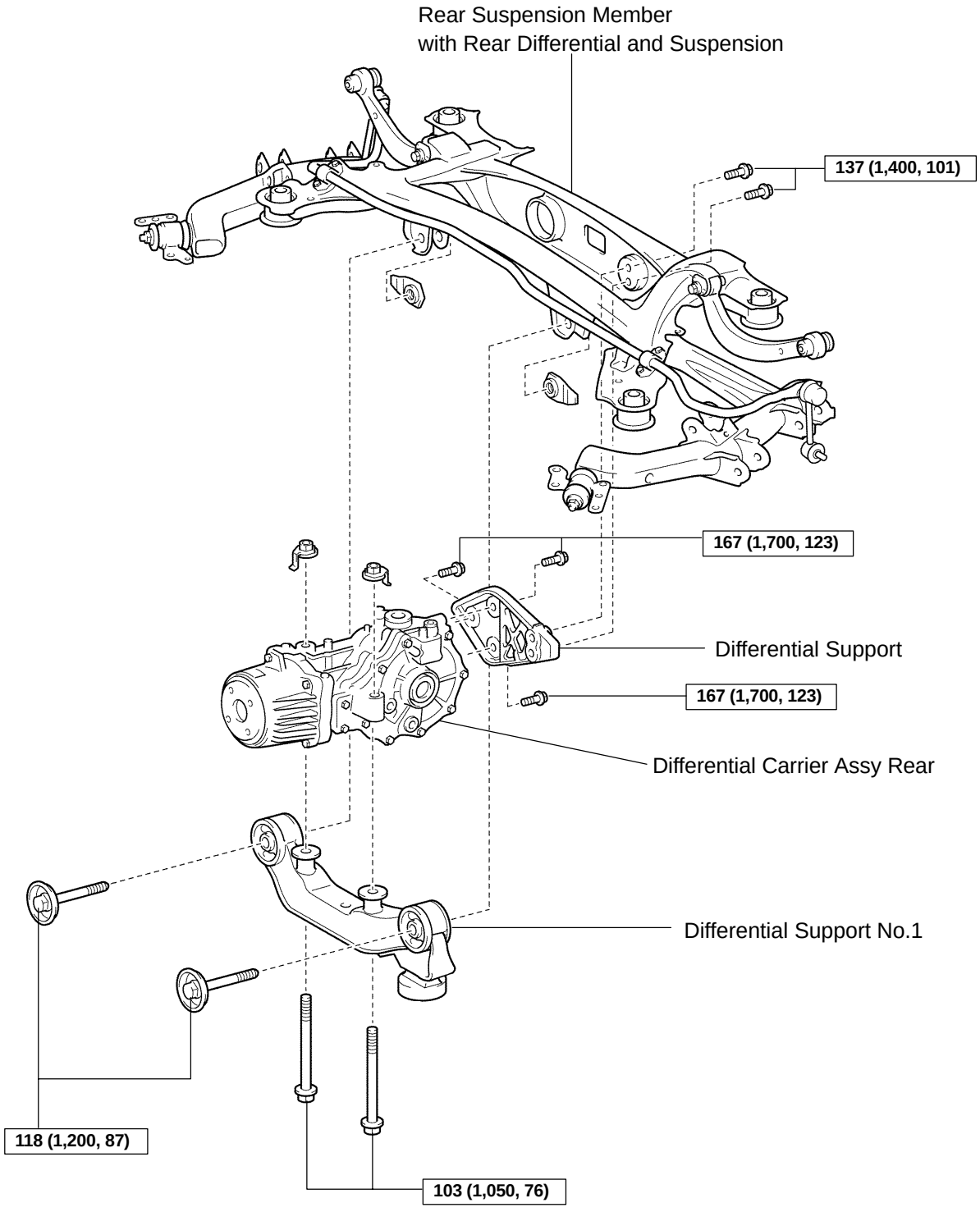
Rear Suspension Member
with Rear Differential and Suspension
137 (1,400, 101)
167 (1,700, 123)
Differential Support
167 (1,700, 123)
Differential Carrier Assy Rear
Differential Support No.1
118 (1,200, 87)
103 (1,050, 76)
P
N·m (kgf·cm, ft·lbf) : Specified torque
C95922

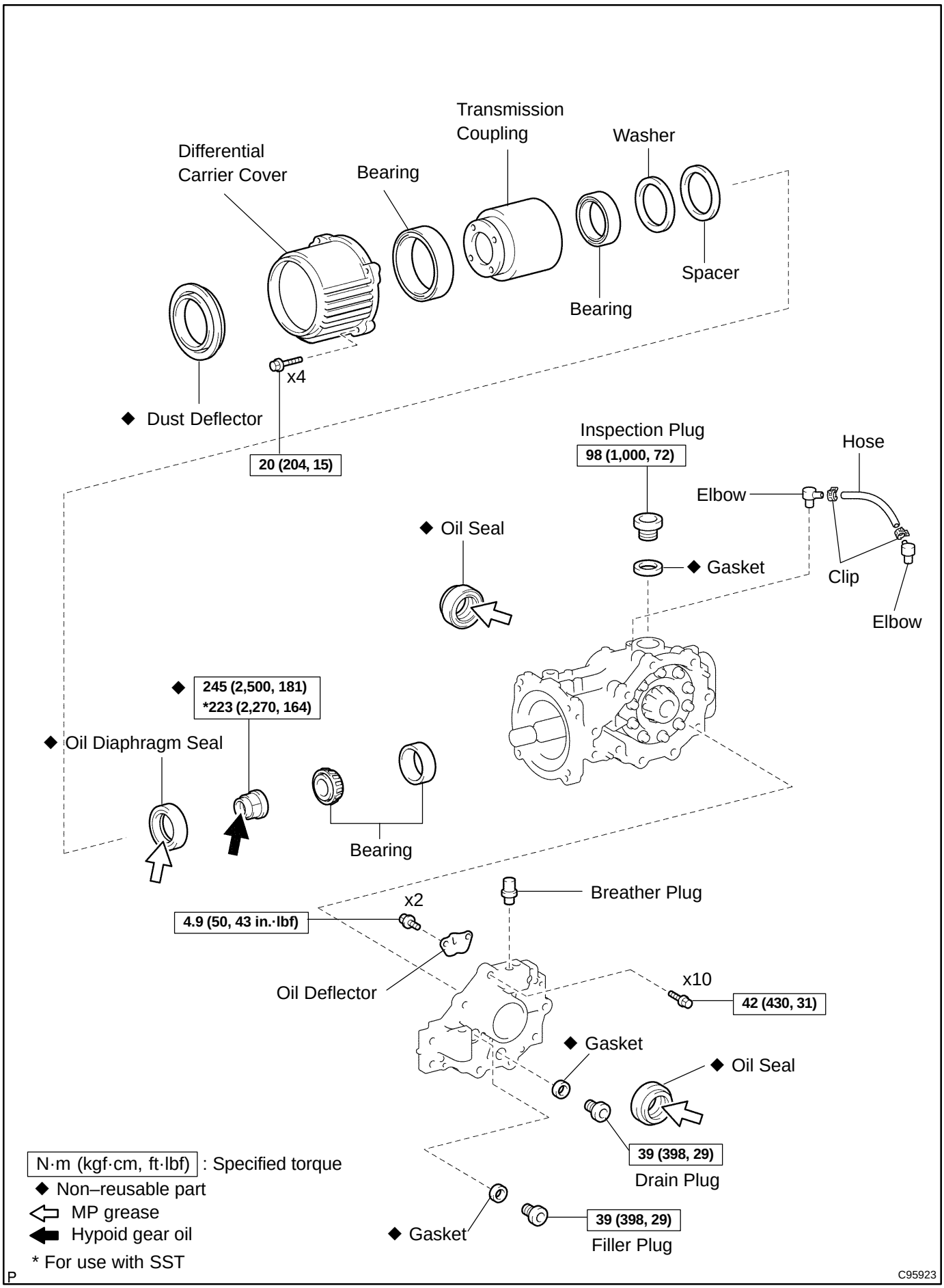
Transmission Coupling
Washer
Differential Carrier Cover
Bearing
Spacer
Bearing
x4
◆ Dust Deflector
20 (204, 15)
Inspection Plug
98 (1,000, 72)
Hose
Elbow
◆ Oil Seal
◆ Gasket
Clip
Elbow
◆ 245 (2,500, 181)
*223 (2,270, 164)
◆ Oil Diaphragm Seal
Bearing
Breather Plug
x2
4.9 (50, 43 in.·lbf)
Oil Deflector
x10
42 (430, 31)
◆ Gasket
◆ Oil Seal
39 (398, 29)
Drain Plug
N·m (kgf·cm, ft·lbf) : Specified torque
◆ Non–reusable part
MP grease
Hypoid gear oil
* For use with SST
◆ Gasket
39 (398, 29)
Filler Plug
P
C95923

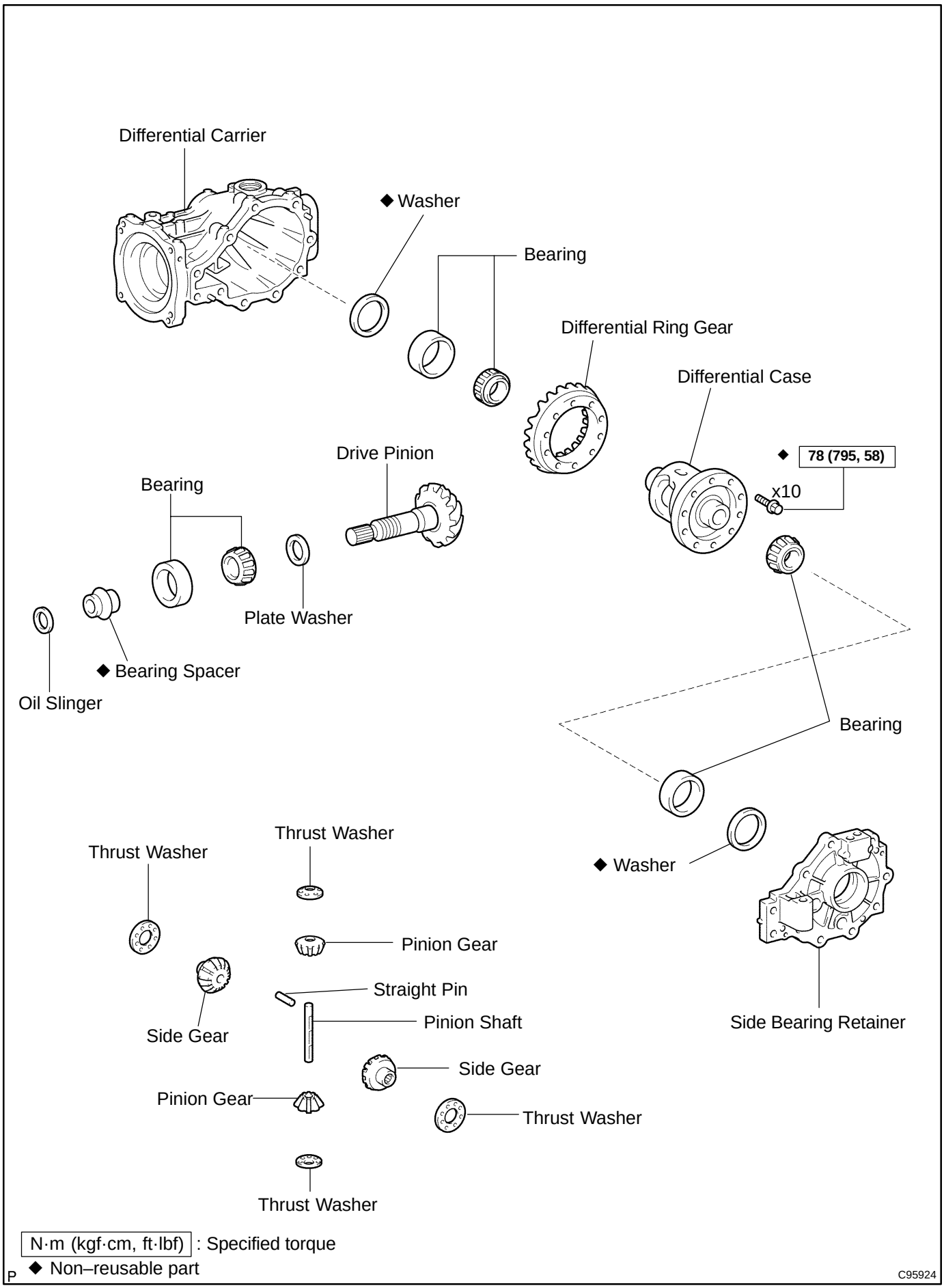
Differential Carrier
◆ Washer
Bearing
Differential Ring Gear
Differential Case
◆ 78 (795, 58)
x10
Drive Pinion
Bearing
Plate Washer
◆ Bearing Spacer
Oil Slinger
Bearing
◆ Washer
Thrust Washer
Thrust Washer
Pinion Gear
Straight Pin
Pinion Shaft
Side Gear
Side Gear
Pinion Gear
Thrust Washer
Thrust Washer
Side Bearing Retainer
N·m (kgf·cm, ft·lbf) : Specified torque
◆ Non–reusable part
C95924

DIFFERENTIAL OIL (4WD)

2904M–01

ADJUSTMENT

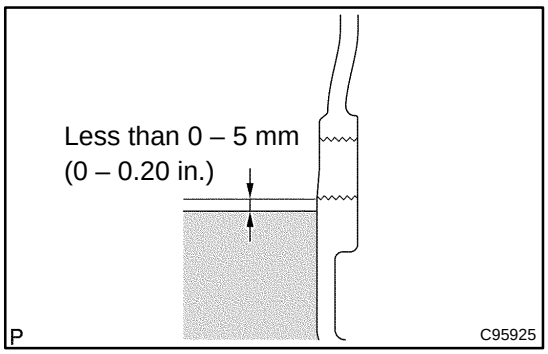

1. INSPECT AND ADJUST DIFFERENTIAL OIL

(a) Remove the filler plug and gasket.

(b) Remove the drain plug and gasket, and drain the oil.

(c) Reinstall the drain plug with a new gasket.
Torque: 39 N·m (398 kgf·cm, 29 ft·lbf)

(d) Fill new differential oil as shown in the illustration.
Capacity: 0.5 litter (0.52 US qts, 0.44 lmp. qts)
Oil grade: Hypoid gear oil API GL–5

Recommended oil viscosity:

Above –18°C (0°F)	SAE 90
Below –18°C (0°F)	SAE 80W or 80W–90

(e) Reinstall the filler plug with a new gasket.
Torque: 39 N·m (398 kgf·cm, 29 ft·lbf)

2. ADD DIFFERENTIAL OIL

OIL DIAPHRAGM SEAL (4WD)

2904N–01

REPLACEMENT

HINT:

COMPONENTS: See page 29–3.

1. REMOVE EXHAUST PIPE ASSY CENTER (See page 15–4)

2. REMOVE PROPELLER W/CENTER BEARING SHAFT ASSY (See page 30–6)

SST 09325–20010

3. REMOVE REAR DIFFERENTIAL FILLER PLUG

(a) Using a hexagon wrench (10 mm), remove the filler plug and gasket.

4. REMOVE REAR DIFFERENTIAL DRAIN PLUG

(a) Using a hexagon wrench (10 mm), remove the drain plug and gasket, drain the oil.

Torque: 39 N·m (398 kgf·cm, 29 ft·lbf)

5. REMOVE REAR DIFFERENTIAL CARRIER COVER

(a) Remove the 4 bolts and differential carrier cover.

(b) Using a brass bar and a hammer, tap the rear differential carrier cover to remove the rear differential carrier cover w/ transmission coupling assy from the rear differential carrier assy.

NOTICE:

- **Place the brass bar on the rib of the rear differential carrier cover.**
- **Do not drop the rear differential carrier cover w/ transmission coupling assy.**

6. REMOVE TRANSMISSION COUPLING CONICAL SPRING WASHER

HINT:

Check the direction of the washer to face.

7. REMOVE TRANSMISSION COUPLING SPACER

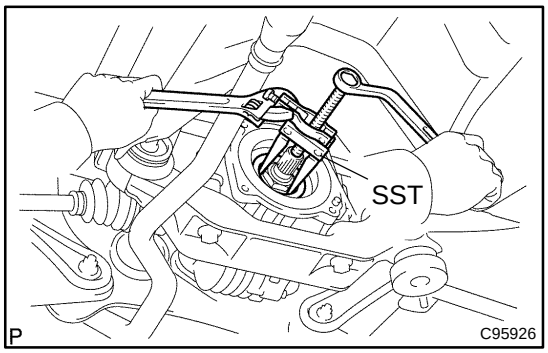

8. REMOVE OIL DIAPHRAGM SEAL

(a) Using SST, remove the oil diaphragm seal.

SST 09308–10010

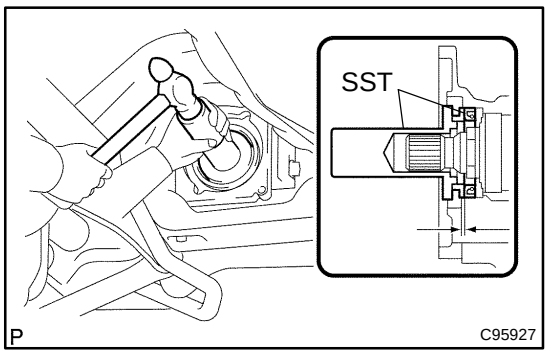

9. INSTALL OIL DIAPHRAGM SEAL

(a) Using SST and a hammer, install a new oil diaphragm seal.

SST 09506–35010, 09554–22010

Oil seal drive in depth:

0.7 – 1.3 mm (0.03 – 0.05 in.)

(b) Apply MP grease to the oil seal lip.

10. INSTALL TRANSMISSION COUPLING SPACER

11. INSTALL TRANSMISSION COUPLING CONICAL SPRING WASHER

NOTICE:

Install the washer so that the making position faces to the front side of the vehicle.

12. INSTALL REAR DIFFERENTIAL CARRIER COVER

(a) Install the differential carrier cover with 4 bolts.
Torque: 20 N·m (204 kgf·cm, 15 ft·lbf)

13. INSPECT AND ADJUST DIFFERENTIAL OIL (See page 29–7)

14. INSTALL REAR DIFFERENTIAL FILLER PLUG (See page 29–7)

15. INSTALL PROPELLER W/CENTER BEARING SHAFT ASSY (See page 30–6)

16. INSTALL EXHAUST PIPE ASSY CENTER (See page 15–4)

17. CHECK EXHAUST GAS LEAK (See page 15–4)

REAR DIFFERENTIAL SIDE GEAR SHAFT OIL SEAL (4WD)

2904O–01

REPLACEMENT

HINT:

COMPONENTS: See page 29–3.

1. REMOVE REAR WHEEL

2. REMOVE REAR DIFFERENTIAL FILLER PLUG

(a) Using a hexagon wrench (10 mm), remove the filler plug and gasket.

3. REMOVE REAR DIFFERENTIAL DRAIN PLUG

(a) Using a hexagon wrench (10 mm), remove the drain plug and gasket, drain the oil.

Torque: 39 N·m (398 kgf·cm, 29 ft·lbf)

4. SEPARATE REAR STABILIZER LINK ASSY LH (See page 27–39)

5. REMOVE REAR AXLE SHAFT LH NUT (See page 30–46)

6. REMOVE REAR BRAKE DRUM SUB–ASSY

7. SEPARATE SPEED SENSOR REAR LH (See page 32–64)

8. SEPARATE STRUT SET,PARKING BRAKE SHOE,LH (See page 32–41)

SST 09703–30010

9. REMOVE FRONT BRAKE SHOE (See page 32–41)

SST 09718–00010

10. REMOVE STRUT SET,PARKING BRAKE SHOE,LH (See page 32–41)

11. REMOVE SPRING,TENSION(FOR REAR BRAKE SHOE RETURN) (See page 32–41)

12. REMOVE REAR BRAKE SHOE (See page 32–41)

SST 09718–00010

13. REMOVE PARKING BRAKE CABLE ASSY NO.3 (See page 33–15)

14. SEPARATE REAR BRAKE TUBE NO.4

15. SEPARATE REAR SUSPENSION ARM ASSY NO.1 LH (See page 27–32)

16. SEPARATE UPPER CONTROL ARM ASSY (See page 27–32)

17. REMOVE AXLE ASSY RR LH (See page 30–66)

18. REMOVE REAR DRIVE SHAFT ASSY LH (See page 30–46)

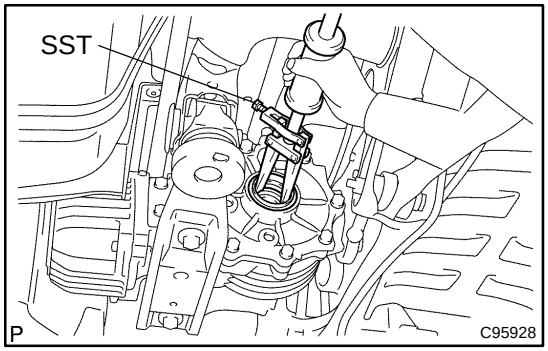

19. REMOVE REAR DIFFERENTIAL SIDE GEAR SHAFT OIL SEAL

(a) Using SST, remove the side gear shaft oil seal.

SST 09308–00010

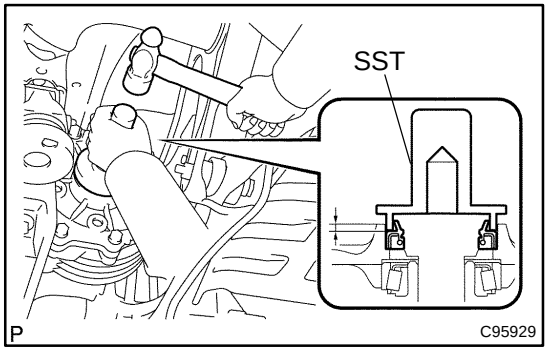

20. INSTALL REAR DIFFERENTIAL SIDE GEAR SHAFT OIL SEAL

(a) Using SST and a hammer, install a new side gear shaft oil seal.

SST 09554–22010

Oil seal drive in depth:

4.2 – 4.8 mm (0.165 – 0.189 in.)

(b) Apply MP grease to the oil seal lip.

21. **INSTALL REAR DRIVE SHAFT ASSY LH (See page 30–46)**
22. **TEMPORARY TIGHTEN UPPER CONTROL ARM ASSY (See page 27–32)**
23. **INSTALL AXLE ASSY RR LH (See page 30–66)**
24. **TEMPORARY TIGHTEN REAR SUSPENSION ARM ASSY NO.1 LH (See page 27–27)**
25. **INSTALL REAR BRAKE TUBE NO.4**
26. **INSTALL PARKING BRAKE CABLE ASSY NO.3 (See page 33–15)**
27. **APPLICATION HIGH TEMPERATURE GREASE (See page 32–41)**
28. **INSTALL REAR BRAKE SHOE (See page 32–41)**
    SST 09718–00010
29. **INSTALL SPRING,TENSION(FOR REAR BRAKE SHOE RETURN) (See page 32–41)**
30. **INSTALL STRUT SET,PARKING BRAKE SHOE,LH (See page 32–41)**
31. **INSTALL FRONT BRAKE SHOE (See page 32–41)**
    SST 09718–00010
32. **CONNECT STRUT SET,PARKING BRAKE SHOE,LH (See page 32–41)**
    SST 09703–30010
33. **INSTALL SPEED SENSOR REAR LH (See page 32–41)**
34. **CHECK REAR DRUM BRAKE INSTALLATION (See page 32–41)**
35. **INSTALL REAR BRAKE DRUM SUB–ASSY**
36. **INSTALL REAR AXLE SHAFT LH NUT (See page 30–46)**
37. **ADJUST REAR DRUM BRAKE SHOE CLEARANCE (See page 32–41)**
38. **INSTALL REAR STABILIZER LINK ASSY LH (See page 27–39)**
39. **STABILIZE SUSPENSION (See page 27–16)**
40. **FULLY TIGHTEN UPPER CONTROL ARM ASSY (See page 27–32)**
41. **FULLY TIGHTEN REAR SUSPENSION ARM ASSY NO.1 LH (See page 27–27)**
42. **ADD DIFFERENTIAL OIL (See page 29–7)**
43. **INSPECT AND ADJUST DIFFERENTIAL OIL (See page 29–7)**
44. **BLEED BRAKE LINE (See page 32–6)**
45. **CHECK FLUID LEVEL IN RESERVOIR (See page 32–6)**
46. **INSPECT AND ADJUST REAR WHEEL ALIGNMENT (See page 27–7)**
47. **CHECK ABS SPEED SENSOR SIGNAL (See page 05–316)**

DIFFERENTIAL CARRIER ASSY REAR (4WD)

2904P–01

OVERHAUL

HINT:

COMPONENTS: See page 29–3.

1. REMOVE REAR WHEEL

2. REMOVE REAR DIFFERENTIAL FILLER PLUG

(a) Using a hexagon wrench (10 mm), remove the filler plug and gasket.

3. REMOVE REAR DIFFERENTIAL DRAIN PLUG

(a) Using a hexagon wrench (10 mm), remove the drain plug and gasket, drain the oil.

Torque: 39 N·m (398 kgf·cm, 29 ft·lbf)

4. REMOVE PROPELLER W/CENTER BEARING SHAFT ASSY (See page 30–6)

SST 09325–20010

5. REMOVE EXHAUST PIPE (See page 15–4)

6. SEPARATE REAR STABILIZER LINK ASSY LH (See page 27–39)

7. SEPARATE REAR STABILIZER LINK ASSY RH

HINT:

Separate the RH side by the same procedures as LH side.

8. REMOVE REAR AXLE SHAFT LH NUT (See page 30–46)

9. REMOVE REAR AXLE SHAFT RH NUT

HINT:

Remove the RH side by the same procedures as LH side.

10. REMOVE REAR BRAKE DRUM SUB–ASSY

11. SEPARATE SPEED SENSOR REAR LH

12. SEPARATE SPEED SENSOR REAR RH

13. SEPARATE STRUT SET,PARKING BRAKE SHOE,LH (See page 32–41)

SST 09703–30010

14. REMOVE FRONT BRAKE SHOE (See page 32–41)

SST 09718–00010

15. REMOVE STRUT SET,PARKING BRAKE SHOE,LH (See page 32–41)

16. REMOVE SPRING,TENSION(FOR REAR BRAKE SHOE RETURN) (See page 32–41)

17. REMOVE REAR BRAKE SHOE (See page 32–41)

SST 09718–00010

18. REMOVE PARKING BRAKE CABLE ASSY NO.3 (See page 33–15)

19. REMOVE PARKING BRAKE CABLE ASSY NO.2

HINT:

Remove the RH side by the same procedures as LH side.

20. SEPARATE REAR BRAKE TUBE NO.4 (See page 32–41)

21. SEPARATE REAR BRAKE TUBE NO.3

HINT:

Remove the RH side by the same procedures as LH side.

22. SEPARATE REAR SUSPENSION ARM ASSY NO.1 LH (See page 27–27)

23. SEPARATE REAR SUSPENSION ARM ASSY NO.1 RH

HINT:

Separate the RH side by the same procedures as LH side.

24. SEPARATE UPPER CONTROL ARM ASSY (See page 27–32)

25. REMOVE AXLE ASSY RR LH (See page 30–66)

26. REMOVE AXLE ASSY RR RH

HINT:

Remove the RH side by the same procedures as LH side.

27. REMOVE REAR SUSPENSION MEMBER SUB–ASSY (See page 27–32)

28. REMOVE REAR DRIVE SHAFT ASSY LH (See page 30–46)

29. REMOVE REAR DRIVE SHAFT ASSY RH

HINT:

Remove the RH side by the same procedures as LH side.

30. REMOVE DIFFERENTIAL CARRIER ASSY REAR

(a) Remove the 2 rear mounting bolts.

(b) Remove the 2 bolts, nuts and rear differential with support front side.

31. REMOVE DIFFERENTIAL SUPPORT

(a) Remove the 3 bolts and differential support rear side from the differential.

32. REMOVE REAR DIFFERENTIAL SUPPORT NO.1

(a) Remove the 2 bolts, nuts and differential support front side from the differential.

33. FIX DIFFERENTIAL CARRIER ASSY REAR

34. REMOVE REAR DIFFERENTIAL DRAIN PLUG

(a) Using a hexagon wrench (17 mm), remove the rear differential filler plug (inspection plug) and gasket.

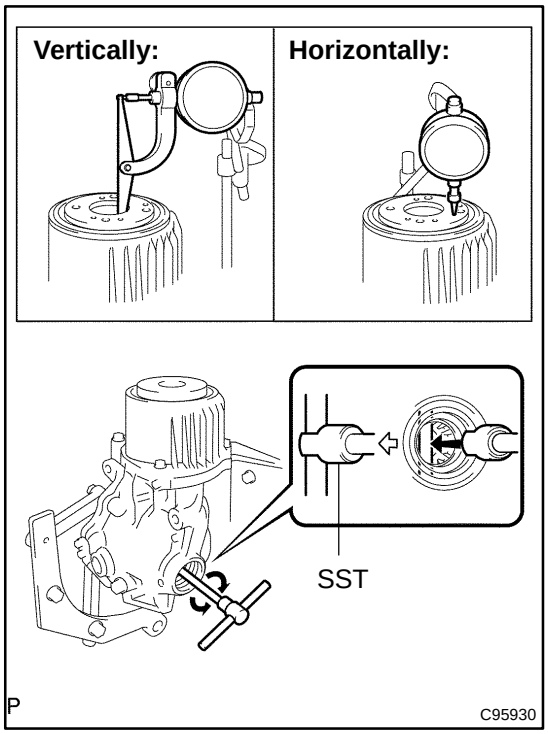

35. INSPECT RUNOUT OF TRANSMISSION COUPLING ASSY

(a) Using SST and a dial indicator, measure the runout of the transmission coupling vertically.

SST 09564–32011

Maximum runout: 0.05 mm (0.002 in.)

(b) Using SST and a dial indicator, measure the runout of the transmission coupling horizontally.

SST 09564–32011

Minimum runout: 0.05 mm (0.002 in.)

36. REMOVE REAR DIFFERENTIAL CARRIER COVER

(a) Remove the 4 bolts and differential carrier cover.

37. REMOVE TRANSMISSION COUPLING CONICAL SPRING WASHER

38. REMOVE TRANSMISSION COUPLING SPACER

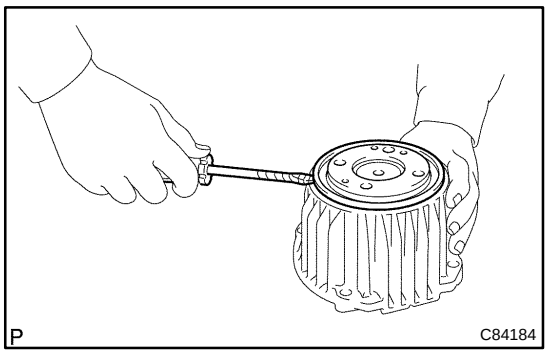

39. REMOVE REAR DIFFERENTIAL DUST DEFLECTOR

(a) Using a screwdriver, remove the dust deflector.

HINT:

Tape the screwdriver tip before use.

40. REMOVE TRANSMISSION COUPLING ASSY

(a) Remove the transmission coupling assy from the differential carrier cover.

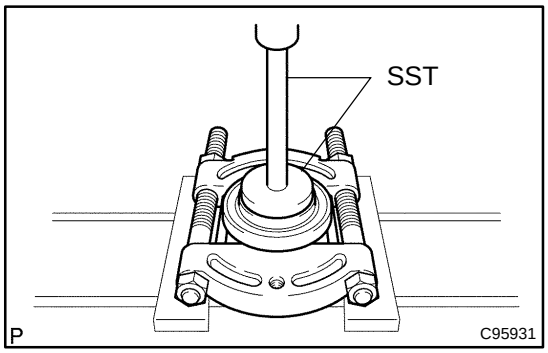

41. REMOVE TRANSMISSION COUPLING RADIAL BALL BEARING

(a) Using SST and a press, remove the transmission coupling radial ball bearing No.1.

SST 09950–00020, 09950–60020 (09951–00910), 09950–70010 (09951–07150)

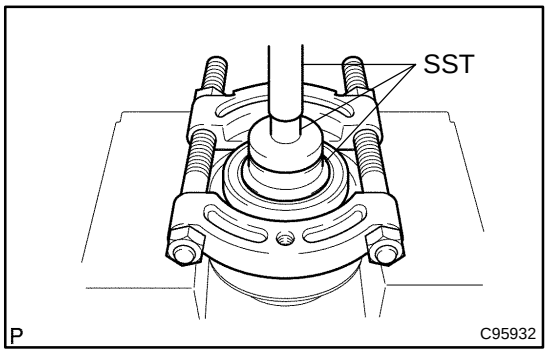

42. REMOVE TRANSMISSION COUPLING RADIAL BALL BEARING

(a) Using SST and a press, remove the transmission coupling radial ball bearing No.2.

SST 09950–00020, 09950–60010 (09951–00460, 09951–00530, 09952–06010), 09950–70010 (09951–07150)

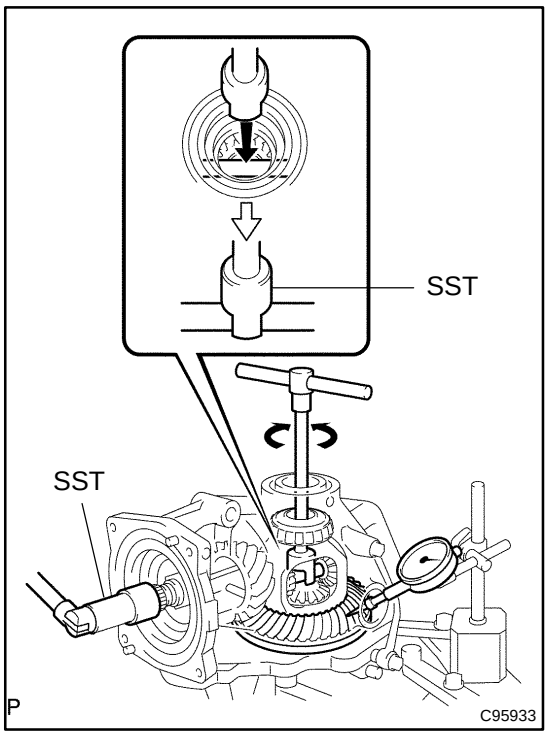

43. INSPECT DIFFERENTIAL RING GEAR BACKLASH

(a) Using SST and a dial indicator, measure the backlash of ring gear while holding the drive pinion.
SST 09556–16011, 09564–32011
Backlash: 0.10 – 0.15 mm (0.0039 – 0.0059 in.)

NOTICE:

Measure at least 3 positions on the circumference of the ring gear.

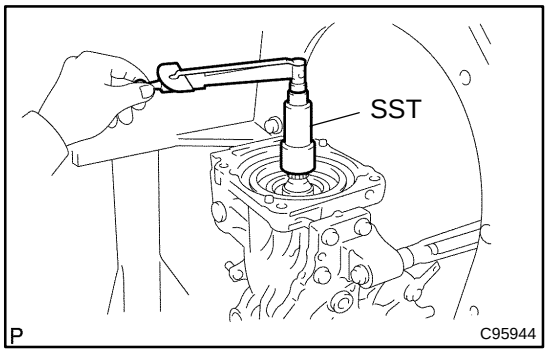

44. INSPECT TOTAL PRELOAD

(a) Using a torque wrench, measure the preload of the backlash between the drive pinion and ring gear.
SST 09556–16011
Preload (at starting):
0.4 – 0.7 N·m (4 – 7 kgf·cm, 3.0 – 6.0 in.·lbf)

HINT:

To make the case bearing smooth, turn clockwise and counterclockwise several times before measuring.

If necessary, disassemble and inspect the differential.

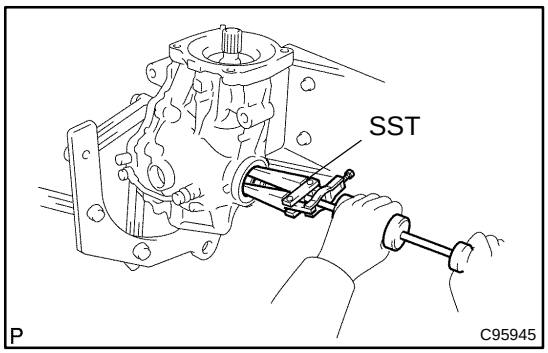

45. REMOVE REAR DIFFERENTIAL SIDE GEAR SHAFT OIL SEAL

(a) Using SST, remove the 2 oil seals from the housing.
SST 09308–00010

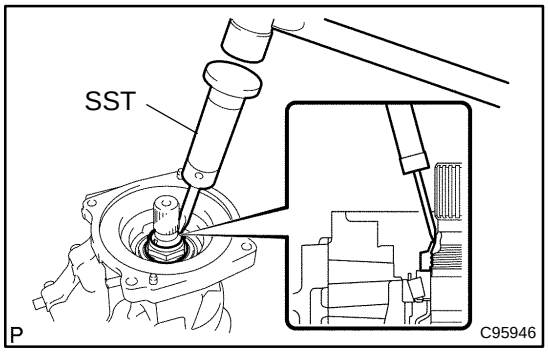

46. REMOVE REAR DRIVE PINION NUT

(a) Using SST and a hammer, unstake the nut.
SST 09930–00010

NOTICE:

Loosen the staked part of the lock nut completely, otherwise the screw of the drive pinion may be damaged.

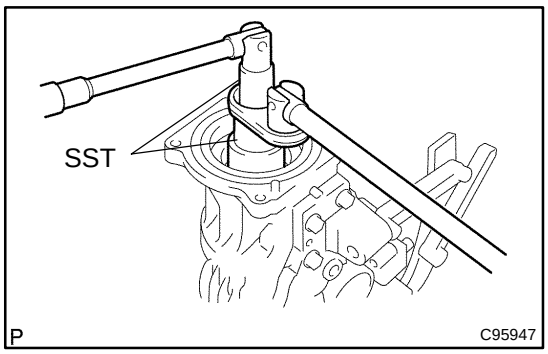

(b) Using SST to hold the drive pinion, remove the nut.
SST 09564–16020, 09556–16011

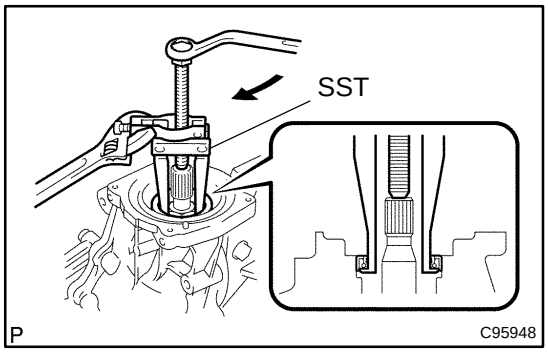

47. REMOVE OIL DIAPHRAGM SEAL

(a) Using SST, remove the diaphragm oil seal.
SST 09308–10010

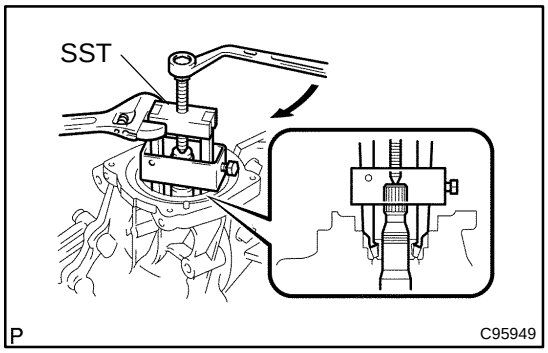

48. REMOVE REAR DRIVE PINION FRONT TAPERED ROLLER BEARING

(a) Using SST, remove the rear drive pinion front tapered roller bearing from the drive pinion.
SST 09556–30010

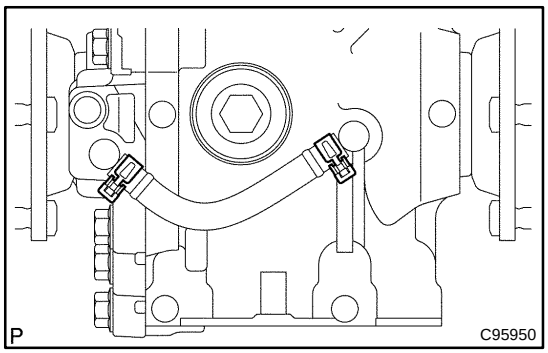

49. REMOVE HOSE SUB–ASSY,DIFFERENTIAL

(a) Remove the 2 clips and hose.

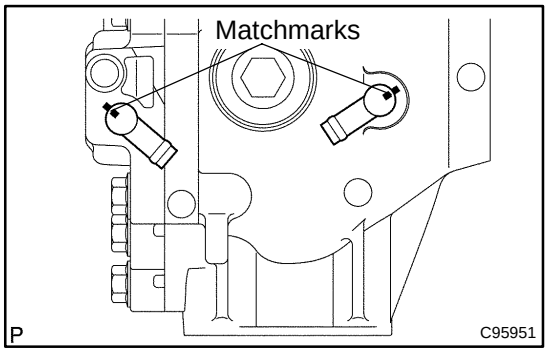

50. REMOVE DIFFERENTIAL PRESSURE CONTROL HOSE ELBOW

(a) Place matchmarks on the elbow and differential carrier.
(b) Using a screwdriver, remove the 2 elbows.

HINT:
Tape the screwdriver tip before use.

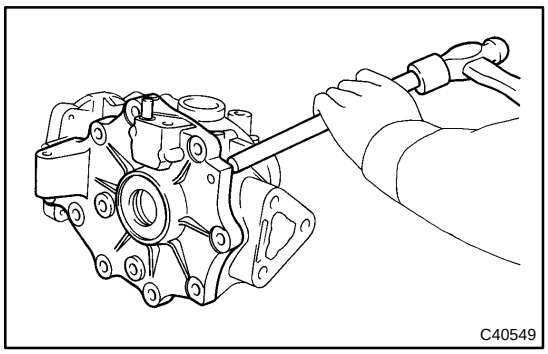

51. REMOVE DIFFERENTIAL SIDE BEARING RETAIER

(a) Remove the 10 bolts from the differential carrier.

(b) Using a brass bar and a hammer, remove the side bearing retainer from the differential carrier.

NOTICE:

Place the brass bar on the rib of differential side bearing retainer.

52. REMOVE REAR DEFFERENTIAL CASE SUB–ASSY

53. REMOVE REAR DIFFERENTIAL CARRIER COVER BREATHER PLUG

(a) Using a screwdriver, remove the breather plug from the side bearing retainer.

HINT:

Tape the screwdriver tip before use.

54. REMOVE REAR DIFFERENTIAL BREATHER PLUG OIL DEFLECTOR

55. REMOVE DIFFERENTIAL DRIVE PINION

56. REMOVE REAR DIFFERENTIAL DRIVE PINION OIL SLINGER

57. REMOVE REAR DIFFERENTIAL DRIVE PINION BEARING SPACER

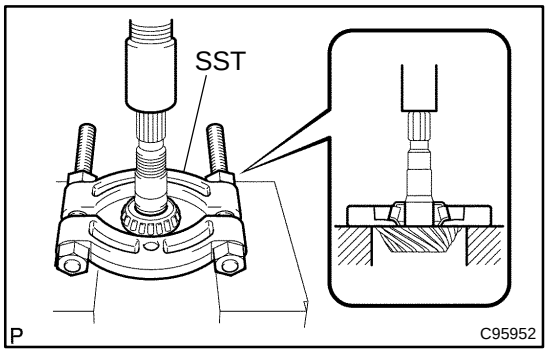

58. REMOVE REAR DRIVE PINION REAR TAPERED ROLLER BEARING

(a) Using SST and a press, remove the bearing from the drive pinion.

SST 09950–00020

HINT:

If the drive pinion and ring gear are damaged, replace them as a set.

(b) Remove the plate washer.

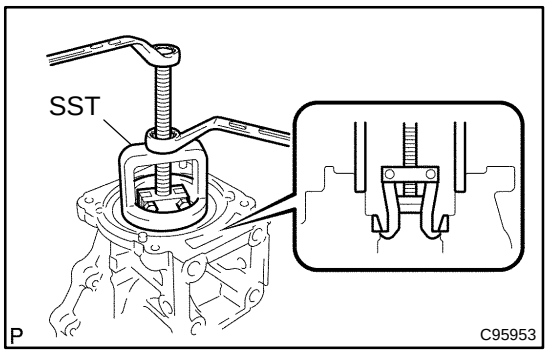

59. REMOVE REAR DRIVE PINION FRONT TAPERED ROLLER BEARING

(a) Using SST, remove the outer race from the differential carrier.

SST 09612–65014 (09612–01020, 09612–01050)

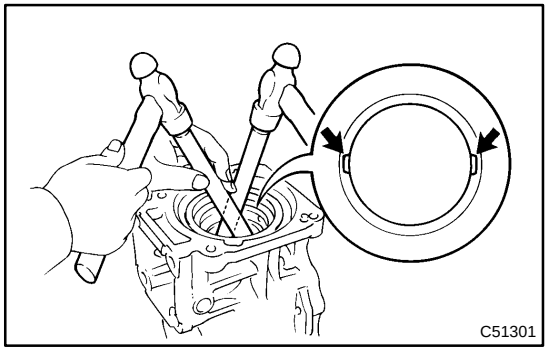

60. REMOVE REAR DRIVE PINION REAR TAPERED ROLLER BEARING

(a) Using a brass bar and a hammer, remove the outer race from the differential carrier.

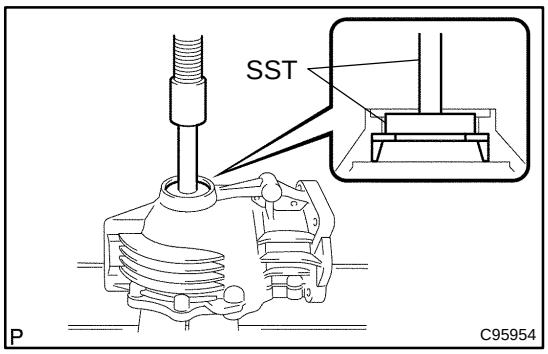

61. REMOVE REAR DIFFERENTIAL CASE BEARING

(a) Using SST and a press, remove the outer race RH.

SST 09950–60010 (09951–00580), 09950–70010 (09951–07100)

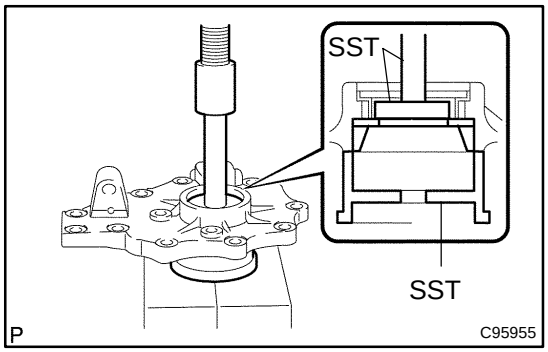

62. REMOVE REAR DIFFERENTIAL CASE BEARING

(a) Using SST and a press, remove the outer race LH.

SST 09950–60010 (09951–00580), 09950–70010 (09951–07100), 09223–15020

63. REMOVE REAR DIFFERENTIAL PINION SHAFT PIN

(a) Remove the 2 straight pins from the rear differential carrier and the side bearing.

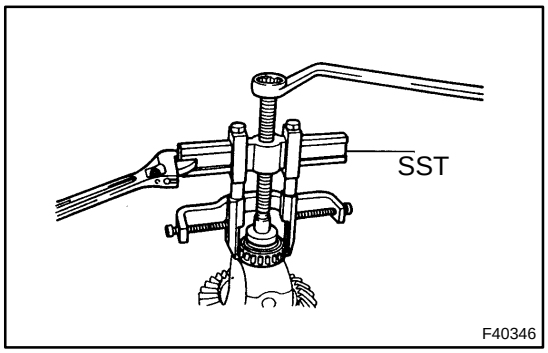

64. REMOVE REAR DIFFERENTIAL CASE BEARING

(a) Using SST, remove the case bearing (RH) from the differential case.

SST 09950–40011 (09951–04020, 09952–04010, 09953–04020, 09954–04010, 09955–04011, 09957–04010, 09958–04011), 09950–60010 (09951–00270, 09951–00370, 09952–06010)

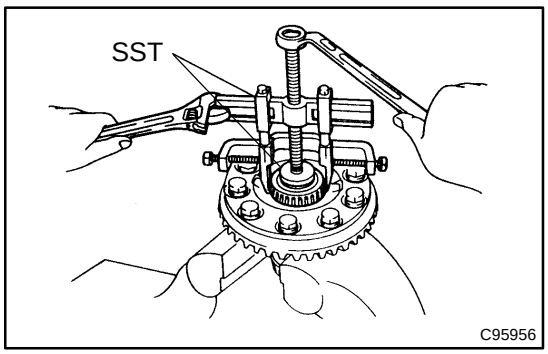

65. REMOVE REAR DIFFERENTIAL CASE BEARING

(a) Using SST, remove the case bearing (LH) from the differential case.

SST 09950–40011 (09951–04020, 09952–04010, 09953–04020, 09954–04010, 09955–04061, 09957–04010, 09958–04011), 09950–60010 (09951–00270, 09951–00370, 09952–06010)

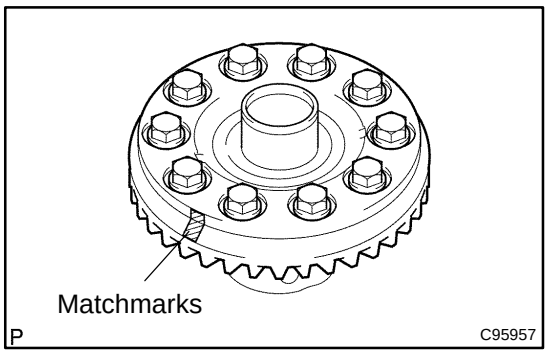

66. REMOVE DIFFERENTIAL RING GEAR

(a) Place matchmarks on the ring gear and differential case.
(b) Remove the 10 ring gear set bolts.
(c) Using a plastic hammer, tap the ring gear to separate it from the differential case.

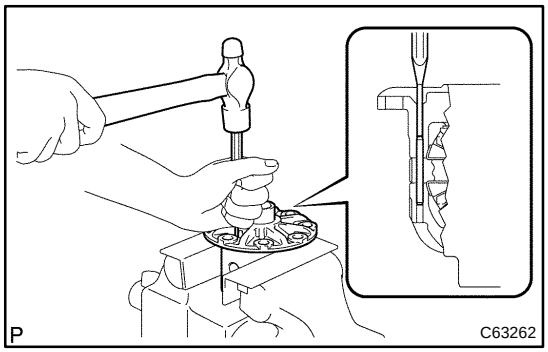

67. REMOVE REAR DEFFERENTIAL CASE SUB–ASSY

(a) Using a pin punch and a hammer, remove the straight pin.
(b) Remove the pinion shaft, 2 pinion gears, 2 pinion gear thrust washers, 2 side gears and 2 side gear thrust washers.

68. INSPECT DIFFERENTIAL PINION AND SIDE GEAR

(a) Check the differential pinion and side gear for wear.

69. INSPECT REAR DEFFERENTIAL CASE SUB–ASSY

(a) Check the differential case for a crack or a damage.

70. INSTALL REAR DEFFERENTIAL CASE SUB–ASSY

(a) Install the 2 proper thrust washer on the 2 side gears.

NOTICE:

- **When installing a thrust washer, side gear, pinion check for dust or chip.**
- **When replacing a side gear and a pinion, replace both of them together.**
- **Apply hypoid gear oil to the sliding part and rotating part.**

(b) Install the 2 side gears, 2 pinion gears, 2 pinion gear thrust washers and pinion shaft in the differential case.

HINT:

Align the holes of the differential case and pinion shaft.

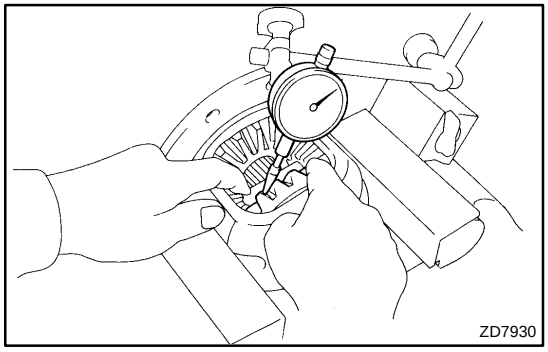

(c) Measure the side gear backlash with holding 1 pinion gear toward the differential case.

Backlash: 0.05 – 0.20 mm (0.0020 – 0.0079 in.)

If the backlash is not within the specification, install the 2 side gear thrust washers with different thicknesses.

HINT:

Refer to the table below and select 2 thrust washers which ensures that the backlash is within the specification.

Side gear thrust washer:

Thickness mm (in.)	Thickness mm (in.)
1.48 – 1.52 (0.0583 – 0.0598)	1.63 – 1.67 (0.0642 – 0.0657)
1.53 – 1.57 (0.0602 – 0.0618)	1.68 – 1.72 (0.0661 – 0.0677)
1.58 – 1.62 (0.0622 – 0.0638)	1.73 – 1.77 (0.0681 – 0.0697)

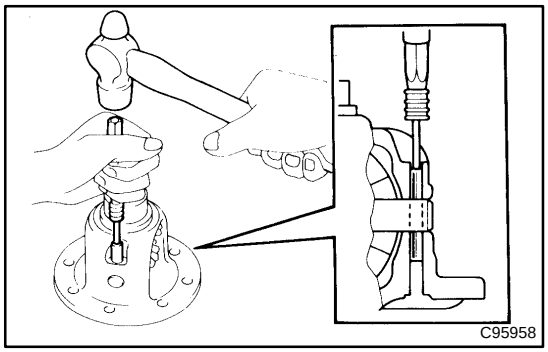

(d) Using a pin punch and a hammer, install the straight pin through the differential case and hole of the pinion shaft.

(e) Using a chisel and a hammer, stake the outside of the differential case pin hole.

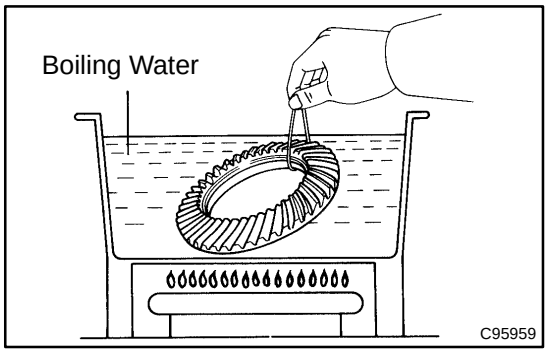

71. INSTALL DIFFERENTIAL RING GEAR

(a) Clean the contact surfaces of the differential case and ring gear.

(b) Heater the ring gear in boiling water.

(c) Carefully remove the ring gear from the boiling water.

(d) After the moisture on the ring gear has completely evaporated, quickly install the ring gear to the differential case.

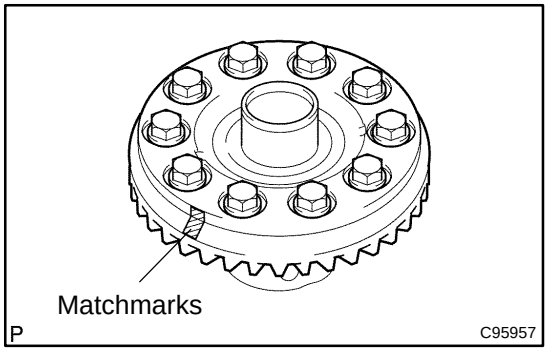

(e) Align the matchmarks on the ring gear and differential case.

(f) Temporarily install 10 new bolts.

(g) After the ring gear cools down enough, torque the 10 bolts uniformly at a time.

Torque: 78 N·m (795 kgf·cm, 58 ft·lbf)

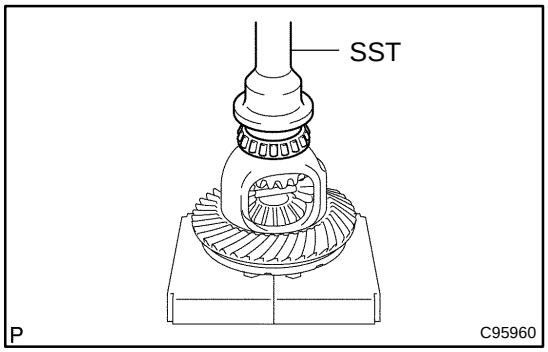

72. INSTALL REAR DIFFERENTIAL CASE BEARING

(a) Using SST and a press, install the rear differential case bearing RH (inner race) into the differential case.

SST 09223–46011

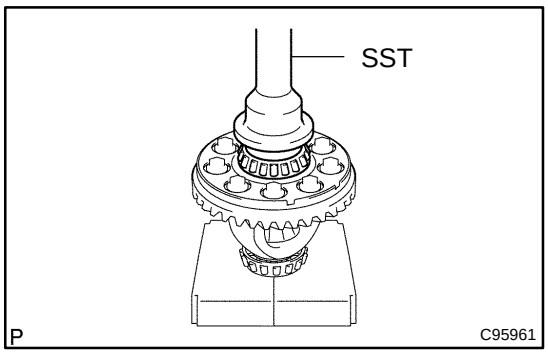

73. INSTALL REAR DIFFERENTIAL CASE BEARING

(a) Using SST and a press, install the rear differential case bearing LH (inner race) into the differential case.
SST 09223–46011

NOTICE:
Use the removed rear differential drive pinion washer when installation.

74. INSTALL REAR DIFFERENTIAL PINION SHAFT PIN

(a) Using a plastic hammer, install 2 rear differential pinion shaft pins to the rear differential carrier and the side bearing.

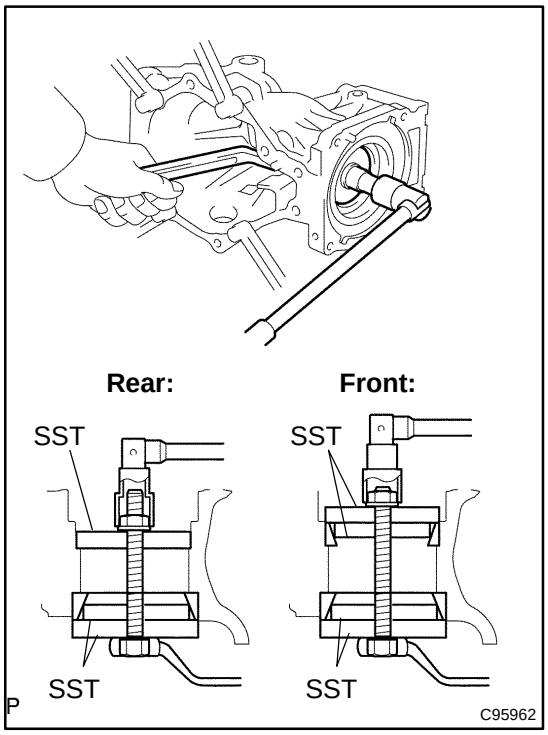

75. INSTALL REAR DRIVE PINION FRONT TAPERED ROLLER BEARING

(a) Front side:
Using SST, bolt, nut and a washer, install the FR outer race to the differential carrier.
SST 09950–60010 (09951–00490, 09951–00540, 09951–00620), 09950–60020 (09951–00680)

76. INSTALL REAR DRIVE PINION REAR TAPERED ROLLER BEARING

(a) Rear side:
Using SST, bolt, nut and a washer, install the RR outer race to the differential carrier.
SST 09950–60010 (09951–00540, 09951–00620), 09950–60020 (09951–00680)

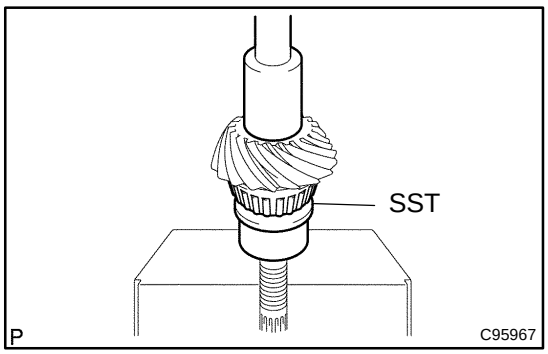

77. INSTALL REAR DRIVE PINION REAR TAPERED ROLLER BEARING

(a) Install the removed plate washer on the drive pinion.
(b) Using SST and a press, install the rear bearing onto the drive pinion.
SST 09316–60011 (09316–00071)

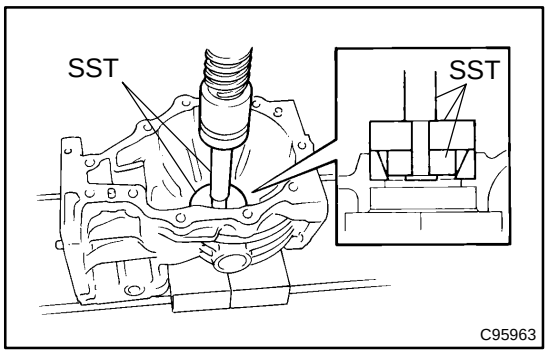

78. INSTALL REAR DIFFERENTIAL CASE BEARING

(a) Using SST and a press, install the rear differential side gear shaft washer and rear differential case bearing RH (outer race) into the rear differential carrier.

SST 09950–60010 (09951–00580, 09952–06010), 09950–60020 (09951–00680), 09950–70010 (09951–07100)

NOTICE:

- **Use the removed rear differential side gear shaft washer when installation.**
- **When replacing the bearing, replace the outer race and the inner race together.**

HINT:

Install the oil seal after adjusting the gear control pattern.

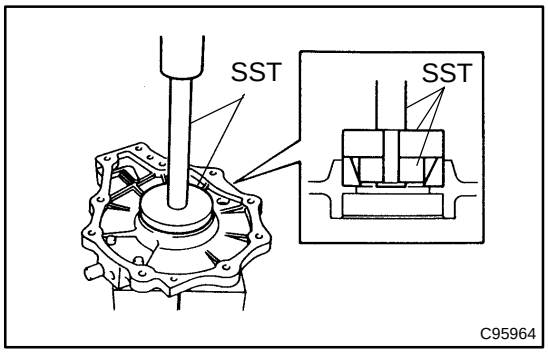

79. INSTALL REAR DIFFERENTIAL CASE BEARING

(a) Using SST and a press, install the rear differential side gear shaft washer and rear differential case bearing LH (outer race) into the differential side bearing retainer.

SST 09950–60010 (09951–00580, 09952–06010), 09950–60020 (09951–00680), 09950–70010 (09951–07100)

NOTICE:

- **Use the removed rear differential side gear shaft washer when installation.**
- **When replacing the bearing, replace the outer race and the inner race together.**

HINT:

Install the oil seal after adjusting the gear contact pattern.

80. ADJUST DIFFERENTIAL DRIVE PINION PRELOAD

(a) Install the drive pinion and front bearing.

(b) Coat the threads of the nut with MP grease.

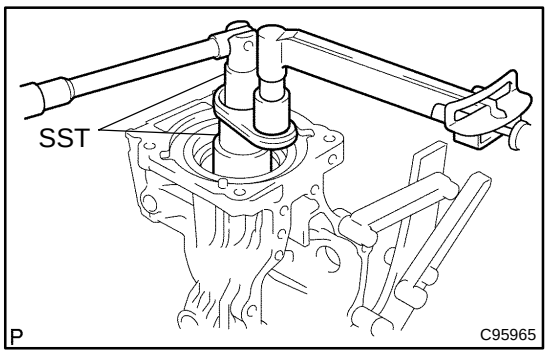

(c) Using SST, adjust the drive pinion preload by tightening nut.

SST 09564–16020

Torque: 223 N·m (2,270 kgf·cm, 164 ft·lbf) or less

NOTICE:

Tighten the rear drive pinion nut gradually. Never tighten excessively.

HINT:

Using a torque wrench with a fulcrum length of 500 mm (19.685 in.)

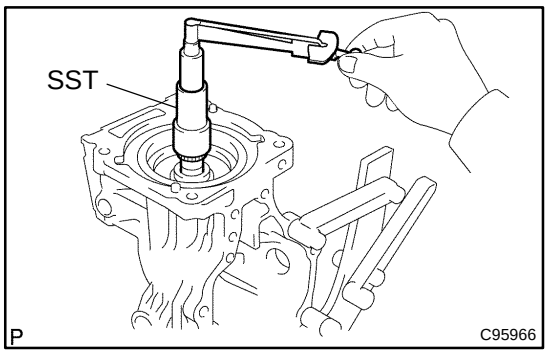

(d) Using SST and a torque wrench, measure the preload.
SST 09556–16011

Preload (at starting):

New bearing	0.7 – 1.3 N·m (7 – 13 kgf·cm, 6 – 11 in.·lbf)
Reused bearing	0.4 – 0.7 N·m (4 – 7 kgf·cm, 3 – 6 in.·lbf)

81. INSTALL REAR DEFFERENTIAL CASE SUB–ASSY

(a) Install the differential case with 10 bolts to the differential carrier.
Torque: 42 N·m (430 kgf·cm, 31 ft·lbf)

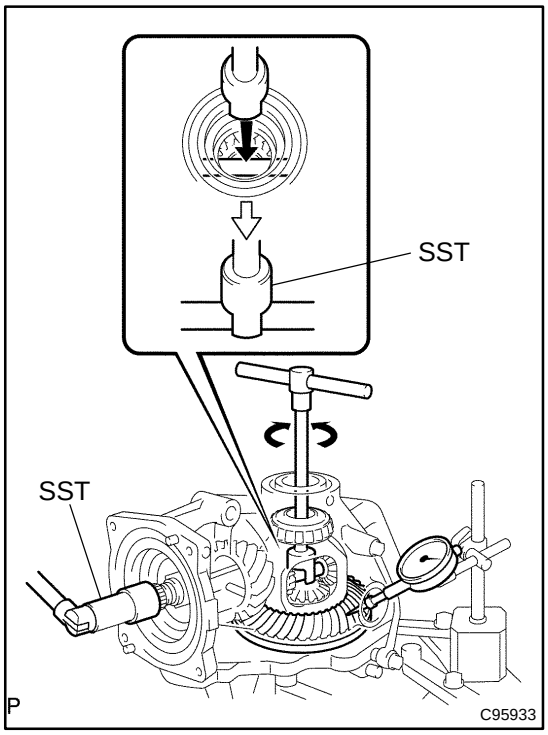

82. ADJUST DIFFERENTIAL RING GEAR BACKLASH

(a) Using SST and a dial indicator, measure the ring gear backlash during holding the drive pinion.
SST 09556–16011, 09564–32011
Backlash: 0.10 – 0.15 mm (0.0039 – 0.059 in.)

If the value is not within the specification, adjust it by either increasing or decreasing the thickness of the washers on both sides by equal amount.

HINT:

- When the backlash is smaller than specified value, select the thick washer in the RH side and thin washer in the LH side.
- When the backlash is larger than the specified value, select the thin washer in the RH side and thick washer in the LH side.

Washer thickness:

Mark	Thickness mm (in.)	Mark	Thickness mm (in.)
25	1.59 – 1.61 (0.0626 – 0.0634)	43	2.13 – 2.15 (0.0839 – 0.0846)
26	1.62 – 1.64 (0.0638 – 0.0646)	44	2.16 – 2.18 (0.0850 – 0.0858)
27	1.65 – 1.67 (0.0650 – 0.0657)	45	2.19 – 2.21 (0.0862 – 0.0870)
28	1.68 – 1.70 (0.0661 – 0.0669)	46	2.22 – 2.24 (0.0874 – 0.0882)
29	1.71 – 1.73 (0.0673 – 0.0681)	47	2.25 – 2.27 (0.0886 – 0.0894)
30	1.74 – 1.76 (0.0685 – 0.0693)	48	2.28 – 2.30 (0.0898 – 0.0906)
31	1.77 – 1.79 (0.0697 – 0.0705)	49	2.31 – 2.33 (0.0909 – 0.0917)
32	1.80 – 1.82 (0.0709 – 0.0717)	50	2.34 – 2.36 (0.0921 – 0.0929)
33	1.83 – 1.85 (0.0720 – 0.0728)	51	2.37 – 2.39 (0.0933 – 0.0941)
34	1.86 – 1.88 (0.0732 – 0.0740)	52	2.40 – 2.42 (0.0945 – 0.0953)

Mark	Thickness mm (in.)	Mark	Thickness mm (in.)
35	1.89 – 1.91 (0.0744 – 0.0752)	53	2.43 – 2.45 (0.0957 – 0.0965)
36	1.92 – 1.94 (0.0756 – 0.0764)	54	2.46 – 2.48 (0.0969 – 0.0976)
37	1.95 – 1.97 (0.0768 – 0.0776)	55	2.49 – 2.51 (0.0980 – 0.0988)
38	1.98 – 2.00 (0.0780 – 0.0787)	56	2.52 – 2.54 (0.0992 – 0.1000)
39	2.01 – 2.03 (0.0791 – 0.0799)	57	2.55 – 2.57 (0.1004 – 0.1012)
40	2.04 – 2.06 (0.0803 – 0.0811)	58	2.58 – 2.60 (0.1016 – 0.1024)
41	2.07 – 2.09 (0.0815 – 0.0823)	59	2.61 – 2.63 (0.1028 – 0.1035)
42	2.10 – 2.12 (0.0827 – 0.0835)	60	2.64 – 2.66 (0.1039 – 0.1047)

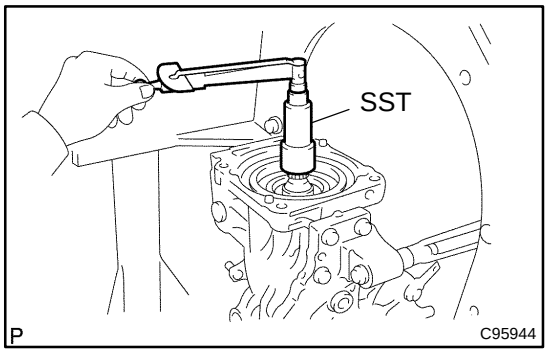

83. MEASURE TOTAL PRELOAD

(a) Using SST and a torque wrench, measure the preload.
SST 09556–16011
Total preload (at starting):
Drive pinion preload plus
0.3 – 0.5 N·m (3 – 5 kgf·cm, 2.6 – 4.3 in.·lbf)

HINT:
Turn the drive pinion counterclockwise and clockwise several times. If the preload non–standard again select proper washer (RH side).

NOTICE:
When changing the rear differential side gear shaft washer, adjust the ring gear backlash first, then adjust the total preload.

84. ADJUST TOOTH CONTACT BETWEEN RING GEAR AND DRIVE PINION

(a) Remove the 10 bolts and the differential side bearing retainer.
(b) Remove the differential case from the differential carrier.
(c) Coat 3 or 4 teeth at 4 different positions on the ring gear with red lead primer.
(d) Install the differential case to the differential carrier.
(e) Install the differential side bearing retainer and the 10 bolts.
Torque: 42 N·m (430 kgf·cm, 31 ft·lbf)
(f) Turn the differential drive pinion several times.
(g) Remove the 10 bolts and the differential side bearing retainer.

(h) Inspect the tooth pattern.

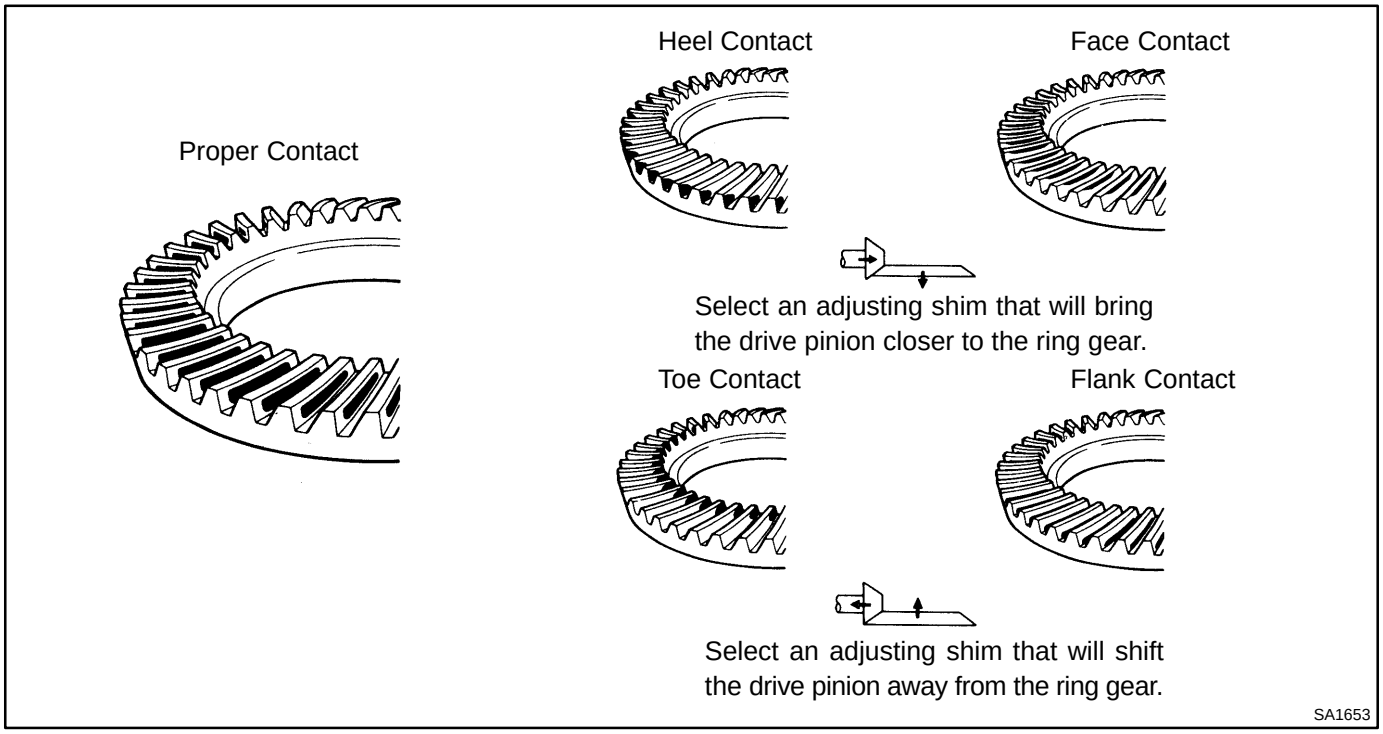

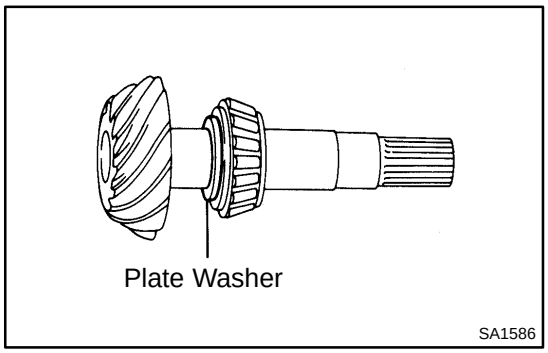

(i) If the tooth contact is not good, perform the following procedures.

(1) In the case of face contact or frank contact, select the rear differential side gear shaft washer with the same thickness increased and decreased in the right and left, or vice versa, and install the rear differential case bearing outer race.

NOTICE:

When changing the thickness of the rear differential side gear shaft washer, adjust the ring gear backlash and total preload before adjusting the tooth contact of the ring gear and that of the drive pinion.

(2) In the case of heel contact or toe contact, select the rear differential drive pinion washer again, and install the rear drive pinion tapered roller bearing RR.

NOTICE:

When changing the thickness of the rear differential side gear shaft washer, adjust the drive pinion preload, ring gear backlash and total preload before adjusting the tooth contact of the ring gear and that of the drive pinion.

Washer thickness:

Mark	Thickness mm (in.)	Mark	Thickness mm (in.)
41	1.695 – 1.705 (0.0667 – 0.0671)	71	1.955 – 1.965 (0.0770 – 0.0774)
42	1.705 – 1.715 (0.0671 – 0.0675)	72	1.965 – 1.975 (0.0774 – 0.0778)
43	1.715 – 1.725 (0.0675 – 0.0679)	73	1.975 – 1.985 (0.0778 – 0.0781)
44	1.725 – 1.735 (0.0679 – 0.0683)	74	1.985 – 1.995 (0.0781 – 0.0785)
45	1.735 – 1.745 (0.0683 – 0.0687)	75	1.995 – 2.005 (0.0785 – 0.0789)
46	1.745 – 1.755 (0.0687 – 0.0691)	76	2.005 – 2.015 (0.0789 – 0.0793)
47	1.755 – 1.765 (0.0691 – 0.0695)	77	2.015 – 2.025 (0.0793 – 0.0797)
48	1.765 – 1.775 (0.0695 – 0.0699)	78	2.025 – 2.035 (0.0797 – 0.0801)
49	1.775 – 1.785 (0.0699 – 0.0703)	79	2.035 – 2.045 (0.0801 – 0.0805)
50	1.785 – 1.795 (0.0703 – 0.0707)	80	2.045 – 2.055 (0.0805 – 0.0809)
51	1.795 – 1.805 (0.0707 – 0.0711)	81	2.055 – 2.065 (0.0809 – 0.0813)
52	1.805 – 1.815 (0.0711 – 0.0715)	82	2.065 – 2.075 (0.0813 – 0.0817)
53	1.815 – 1.825 (0.0715 – 0.0719)	83	2.075 – 2.085 (0.0817 – 0.0821)
54	1.825 – 1.835 (0.0719 – 0.0722)	84	2.085 – 2.095 (0.0821 – 0.0825)
55	1.835 – 1.845 (0.0722 – 0.0726)	85	2.095 – 2.105 (0.0825 – 0.0829)
56	1.845 – 1.855 (0.0726 – 0.0730)	86	2.105 – 2.115 (0.0829 – 0.0833)
57	1.855 – 1.865 (0.0730 – 0.0734)	87	2.115 – 2.125 (0.0833 – 0.0837)
58	1.865 – 1.875 (0.0734 – 0.0738)	88	2.125 – 2.135 (0.0837 – 0.0841)
59	1.875 – 1.885 (0.0738 – 0.0742)	89	2.135 – 2.145 (0.0841 – 0.0844)
60	1.885 – 1.895 (0.0742 – 0.0746)	90	2.145 – 2.155 (0.0844 – 0.0848)
61	1.895 – 1.905 (0.0746 – 0.0750)	91	2.155 – 2.165 (0.0848 – 0.0852)
62	1.905 – 1.915 (0.0750 – 0.0754)	92	2.165 – 2.175 (0.0852 – 0.0856)
63	1.915 – 1.925 (0.0754 – 0.0758)	93	2.175 – 2.185 (0.0856 – 0.0860)
64	1.925 – 1.935 (0.0758 – 0.0762)	94	2.185 – 2.195 (0.0860 – 0.0864)
65	1.935 – 1.945 (0.0762 – 0.0766)	95	2.195 – 2.205 (0.0864 – 0.0868)
70	1.945 – 1.955 (0.0766 – 0.0770)	–	–

85. REMOVE REAR DEFFERENTIAL CASE SUB–ASSY

(a) Remove the 10 bolts and the side bearing retainer.

(b) Remove the drive pinion.

86. REMOVE DIFFERENTIAL DRIVE PINION

87. INSTALL REAR DIFFERENTIAL DRIVE PINION BEARING SPACER

(a) Install a new rear differential drive pinion bearing spacer to the differential drive pinion.

88. INSTALL REAR DIFFERENTIAL DRIVE PINION OIL SLINGER

(a) Install the rear differential drive pinion oil slinger to the differential drive pinion.

NOTICE:

Face the smaller inside diameter to the front.

89. INSTALL DIFFERENTIAL DRIVE PINION

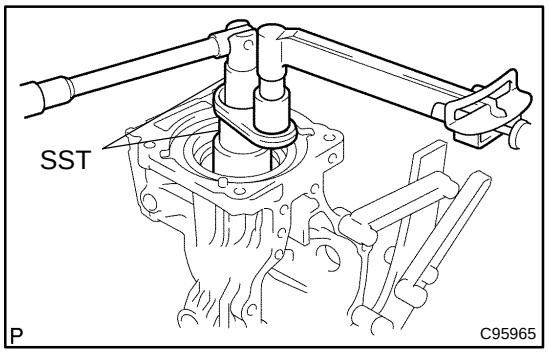

90. INSTALL REAR DRIVE PINION NUT

(a) Coat the threads of a new nut with hypoid gear oil.

(b) Using SST, adjust the drive pinion preload by tightening nut.

SST 09564–16020

Torque: 223 N·m (2,270 kgf·cm, 164 ft·lbf) or less

HINT:

Using a torque wrench with a fulcrum length of 500 mm (19.685 in.).

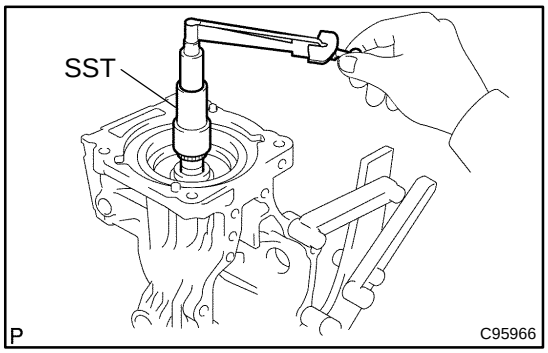

91. ADJUST DIFFERENTIAL DRIVE PINION PRELOAD

(a) Using SST and a torque wrench, measure the preload of the backlash between the drive pinion and ring gear.

SST 09556–16011

Preload (at starting):

New bearing	0.7 – 1.3 N·m (7 – 13 kgf·cm, 6 – 11 in.·lbf)
Reused bearing	0.4 – 0.7 N·m (4 – 7 kgf·cm, 3 – 6 in.·lbf)

If the preload is less than the specification, retighten the nut 5° to 10° each at a time with SST, and adjust so that the starting torque meets the specified value.

If the preload is less than the specification, retighten the nut 13 N·m (130 kgf·cm, 9 ft·lbf) of torque at a time until reaching the specified value.

Torque: 223 N·m (2,270 kgf·cm, 164 ft·lbf) or less

Even if the tightening torque of the rear drive pinion nut exceeds 245 N·m (2,500 kgf·cm, 181 ft·lbf), if the preload is less than the specification, loosen the rear drive pinion nut once and check if the screw top of the rear drive pinion nut and that of the differential drive pinion is crushed.

If the screw top is not crushed, replace the rear differential drive pinion spacer, apply hypoid gear oil API GL–5 to the screw, and repeat the procedure.

92. INSTALL REAR DEFFERENTIAL CASE SUB–ASSY

93. INSTALL DIFFERENTIAL SIDE BEARING RETAIER

(a) Install the differential side bearing retainer and the 10 bolts.
Torque: 42 N·m (430 kgf·cm, 31 ft·lbf)

94. INSPECT DIFFERENTIAL RING GEAR BACKLASH

SST 09556–16011, 09564–32011

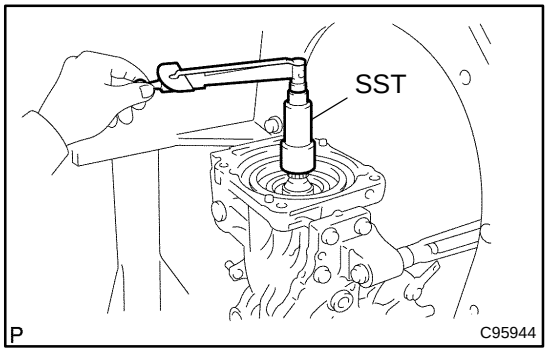

95. INSPECT TOTAL PRELOAD

(a) Using SST and a torque wrench, measure the preload.
SST 09556–16011
Total preload (at starting):
Drive pinion preload plus
0.3 – 0.5 N·m (3 – 5 kgf·cm, 2.6 – 4.3 in.·lbf)

HINT:
Turn the drive pinion counterclockwise and clockwise several times. If the preload non–standard again select proper washer (RH side).

NOTICE:
When changing the rear differential side gear shaft washer, adjust the ring gear backlash first, then adjust the total preload.

96. INSTALL REAR DIFFERENTIAL BREATHER PLUG OIL DEFLECTOR

(a) Install the rear differential breather plug oil deflector with the 2 bolts.
Torque: 5.0 N·m (51 kgf·cm, 44 in.·lbf)

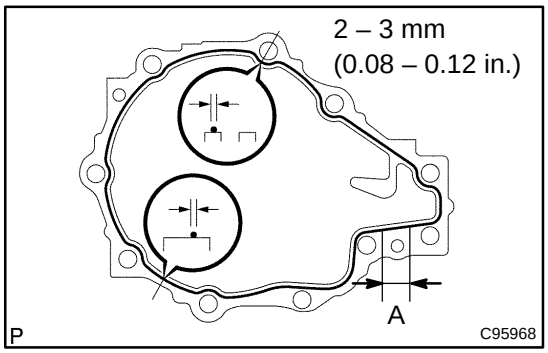

97. INSTALL DIFFERENTIAL SIDE BEARING RETAIER

(a) Remove the 10 bolts and the side bearing retainer.
(b) Install the 2 bolts and oil deflector to the side bearing retainer.
(c) Install the breather plug to the side bearing retainer.
(d) Using a scraper and a wire brush, clean the seal packing attached to the rear differential carrier and the differential side bearing retainer.

NOTICE:
Do not damage the installation surface.

(e) Clean contacting surfaces of any residual FIPG material by using gasoline or alcohol.
(f) Apply FIPG to the side bearing retainer.
FIPG:
Part No. 08826–00090, THREE BOND 1281 or equivalent

HINT:
- FIPG should be applied 2 to 3 mm in diameter with no break.
- Allow on overlap of 10 mm (0.37 in.) or more between the start and end of FIPG application.
- Install the carrier cover within 3 minutes after applying FIPG.
- Begin the application in the range of ”A”.

- Do not add oil or drive the vehicle immediately after installing the cover, and leave it as it is for an hour or more. Also, for 12 hours or more, avoid rapid acceleration/deceleration.

(g) Install the side bearing retainer with the 10 bolts.
Torque: 42 N·m (430 kgf·cm, 31 ft·lbf)

98. INSTALL REAR DIFFERENTIAL CARRIER COVER BREATHER PLUG

(a) Install the rear differential carrier cover breather plug.

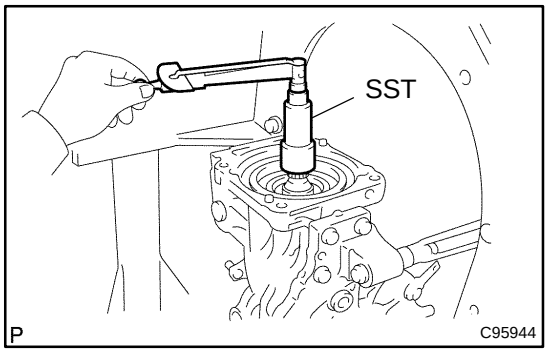

99. INSPECT TOTAL PRELOAD

(a) Using SST and a torque wrench, measure the preload.
SST 09556–16011
Total preload (at starting):
Drive pinion preload plus
0.3 – 0.5 N·m (3 – 5 kgf·cm, 2.6 – 4.3 in.·lbf)

HINT:
Turn the drive pinion counterclockwise and clockwise several times.

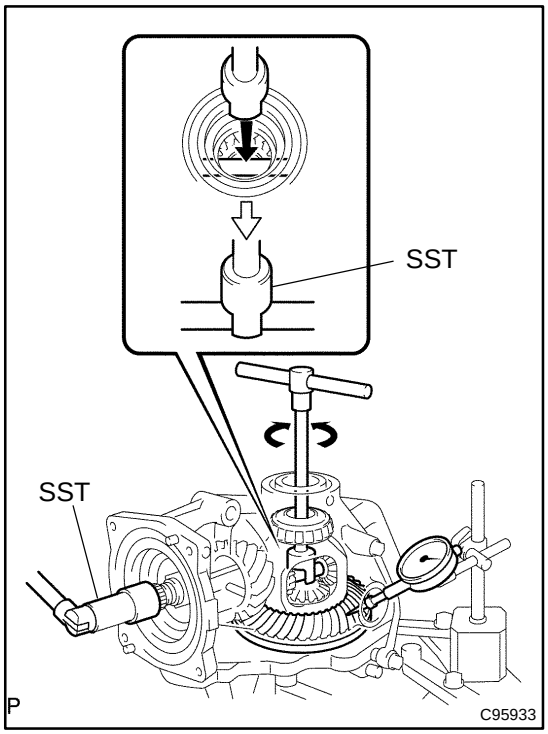

100. INSPECT DIFFERENTIAL RING GEAR BACKLASH

(a) Using SST and a dial indicator, measure the ring gear backlash during holding the drive pinion.
SST 09556–16011, 09564–32011
Backlash: 0.10 – 0.15 mm (0.039 – 0.059 in.)

101. INSTALL REAR DRIVE PINION NUT

(a) Using a chisel and a hammer, stake the rear drive pinion nut.

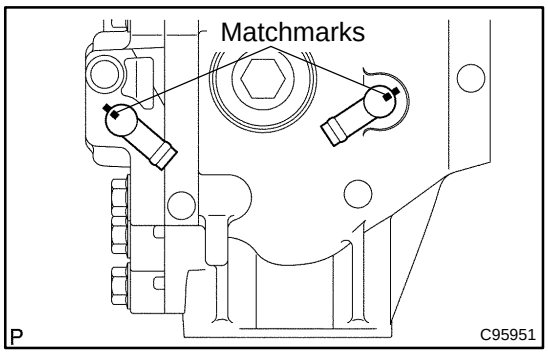

102. INSTALL HOSE SUB–ASSY,DIFFERENTIAL

(a) Align the matchmarks on the elbow and the differential carrier.

(b) Using the 2 clips, install the hose to the elbow.

NOTICE:

Don't interfere the hose and the clips of other parts.

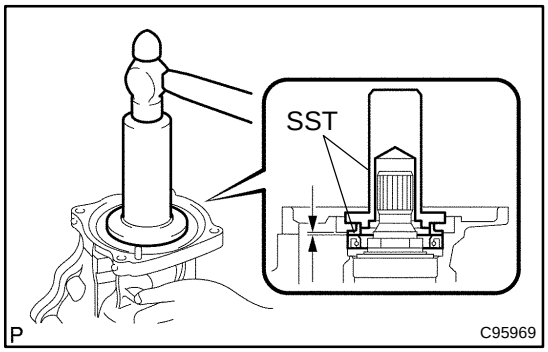

103. INSTALL OIL DIAPHRAGM SEAL

(a) Using SST and a hammer, install a new front oil seal.
SST 09506–35010, 09554–22010
Oil seal drive in depth: 0.7 – 1.3 mm (0.03 – 0.05 in.)

(b) Apply MP grease to the oil seal lip.

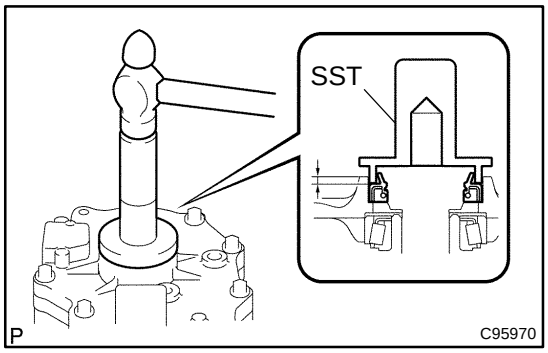

104. INSTALL REAR DIFFERENTIAL SIDE GEAR SHAFT OIL SEAL

(a) Using SST and a hammer, install a new side gear shaft oil seal.
SST 09554–22010
Oil seal drive in depth: 4.2 – 4.8 mm (0.17 – 0.19 in.)

(b) Apply MP grease to the oil seal lip.

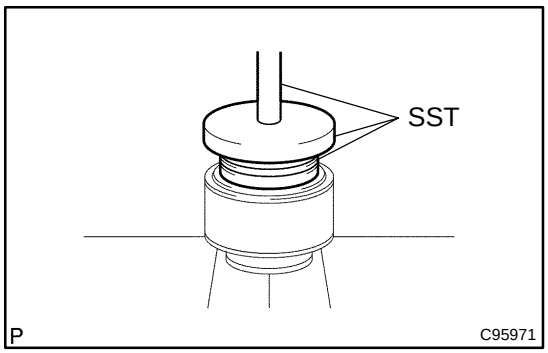

105. INSTALL TRANSMISSION COUPLING RADIAL BALL BEARING

(a) Using SST and a press, install the transmission coupling radial bearing (front side).
SST 09502–12010, 09550–55011 (09550–05061), 09950–70010 (09951–07150)

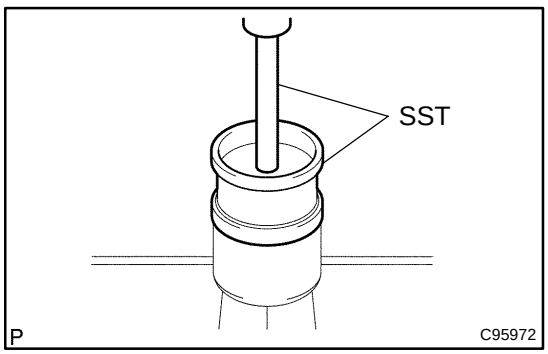

106. INSTALL TRANSMISSION COUPLING RADIAL BALL BEARING

(a) Using SST and a press, install the bearing (rear side).
SST 09223–15030, 09950–70010 (09951–07150)

(b) Install the transmission coupling to the differential carrier cover.

NOTICE:

Install so that the black seal of the bearing faces to the front side of the vehicle (propeller shaft side).

107. INSTALL REAR DIFFERENTIAL CARRIER COVER

(a) Install the transmission coupling assy to the rear differential carrier cover.

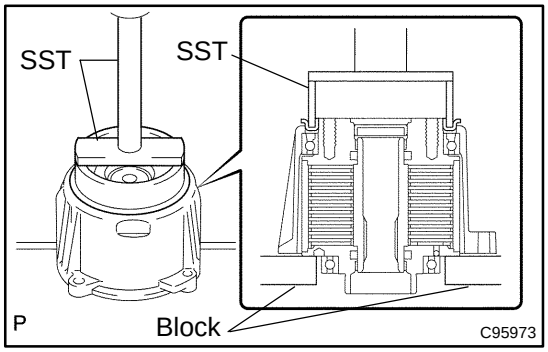

108. INSTALL REAR DIFFERENTIAL DUST DEFLECTOR

(a) Using SST and a press, install the new dust deflector.
SST 09518–36020, 09950–70010 (09951–07150)

109. INSTALL TRANSMISSION COUPLING SPACER

110. INSTALL TRANSMISSION COUPLING CONICAL SPRING WASHER

NOTICE:

Install the transmission coupling conical spring washer so that the side marked orange faces to the front of the vehicle (coupling side).

111. INSTALL REAR DIFFERENTIAL CARRIER COVER

(a) Install the differential carrier cover with the 4 bolts to the differential carrier.
Torque: 19 N·m (194 kgf·cm, 14 ft·lbf)

112. INSTALL REAR DIFFERENTIAL DRAIN PLUG

(a) Install a new gasket with the rear differential drain plug.
Torque: 39 N·m (398 kgf·cm, 29 ft·lbf)

113. INSTALL REAR DIFFERENTIAL FILLER PLUG

(a) Install a new gasket with the rear differential inspection plug.
Torque: 98 N·m (1,000 kgf·cm, 72 ft·lbf)

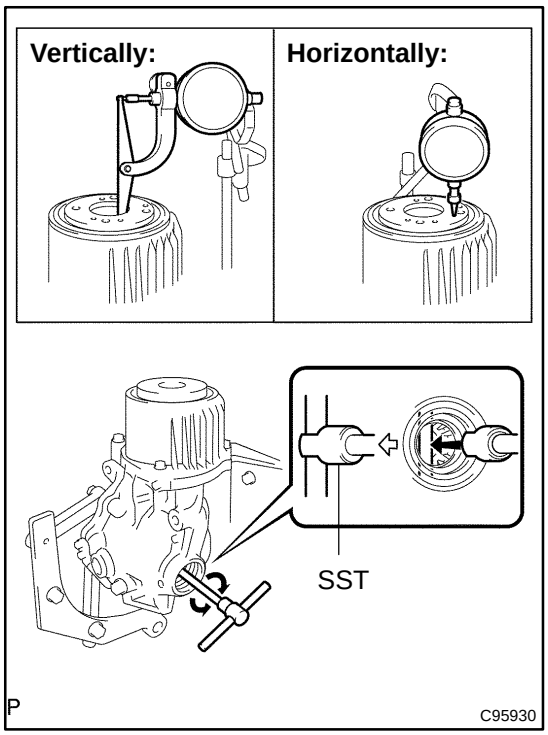

114. INSPECT RUNOUT OF DIFFERENTIAL CARRIER ASSY REAR

(a) Using SST and a dial indicator, measure the runout of the transmission coupling vertically.
SST 09564–32011
Maximum runout: 0.05 mm (0.002 in.)

(b) Using SST and a dial indicator, measure the runout of the transmission coupling horizontally.
SST 09564–32011
Minimum runout: 0.05 mm (0.002 in.)

115. INSTALL REAR DIFFERENTIAL SUPPORT NO.1

(a) Install the rear differential support assy No.1 with the 2 bolts and 2 nuts to the differential carrier assy.
Torque: 103 N·m (1,050 kgf·cm, 76 ft·lbf)

116. INSTALL DIFFERENTIAL SUPPORT

(a) Install the differential support with the 3 bolts to the differential carrier assy.
Torque: 167 N·m (1,700 kgf·cm, 123 ft·lbf)

117. INSTALL DIFFERENTIAL CARRIER ASSY REAR

(a) Install the differential w/ support rear side with the 2 bolts and 2 nuts to the rear suspension member-front side.
Torque: 118 N·m (1,200 kgf·cm, 87 ft·lbf)

(b) Install the differential w/support with the 2 bolts to the rear suspension member rear side.
Torque: 137 N·m (1,400 kgf·cm, 101 ft·lbf)

118. INSTALL REAR SUSPENSION MEMBER SUB–ASSY (See page 27–32)

119. INSTALL REAR DRIVE SHAFT ASSY LH (See page 30–46)

120. INSTALL REAR DRIVE SHAFT ASSY RH

HINT:
Install the RH side by the same procedures as LH side.

121. TEMPORARY TIGHTEN UPPER CONTROL ARM ASSY

122. INSTALL AXLE ASSY RR LH (See page 30–66)

123. INSTALL AXLE ASSY RR RH

HINT:
Install the RH side by the same procedures as LH side.

124. TEMPORARY TIGHTEN REAR SUSPENSION ARM ASSY NO.1 LH (See page 27–27)

125. TEMPORARY TIGHTEN REAR SUSPENSION ARM ASSY NO.1 RH

HINT:
Install the RH side by the same procedures as LH side.

126. INSTALL REAR BRAKE TUBE NO.4 (See page 32–41)
SST 09023–00100

127. INSTALL REAR BRAKE TUBE NO.3
SST 09023–00100

HINT:
Install the RH side by the same procedures as LH side.

128. INSTALL PARKING BRAKE CABLE ASSY NO.3 (See page 33–15)

129. INSTALL PARKING BRAKE CABLE ASSY NO.2

HINT:
Install the RH side by the same procedures as LH side.

130. APPLICATION HIGH TEMPERATURE GREASE (See page 32–41)

131. INSTALL REAR BRAKE SHOE (See page 32–41)
SST 09718–00010

132. INSTALL SPRING,TENSION(FOR REAR BRAKE SHOE RETURN) (See page 32–41)
SST 09718–00010

133. INSTALL STRUT SET,PARKING BRAKE SHOE,LH (See page 32–41)
SST 09703–30010

134. INSTALL FRONT BRAKE SHOE (See page 32–41)
SST 09718–00010

135. CONNECT STRUT SET,PARKING BRAKE SHOE,LH (See page 32–41)

136. INSTALL SPEED SENSOR REAR LH (See page 32–64)

137. INSTALL SPEED SENSOR REAR RH

HINT:
Install the RH side by the same procedures as LH side.

138. CHECK REAR DRUM BRAKE INSTALLATION (See page 32–41)
139. INSTALL REAR BRAKE DRUM SUB–ASSY
140. INSTALL REAR AXLE SHAFT LH NUT (See page 30–46)
141. INSTALL REAR AXLE SHAFT RH NUT
HINT:
Install the RH side by the same procedures as LH side.
142. ADJUST REAR DRUM BRAKE SHOE CLEARANCE (See page 32–41)
143. INSTALL REAR STABILIZER LINK ASSY LH (See page 27–39)
144. INSTALL REAR STABILIZER LINK ASSY RH
HINT:
Install the RH side by the same procedures as LH side.
145. INSTALL PROPELLER W/CENTER BEARING SHAFT ASSY (See page 30–6)
146. INSTALL EXHAUST PIPE (See page 15–4)
147. BLEED BRAKE LINE (See page 32–6)
148. ADD DIFFERENTIAL OIL (See page 29–7)
149. INSPECT AND ADJUST DIFFERENTIAL OIL (See page 29–7)
150. INSTALL REAR WHEEL
Torque: 103 N·m (1,050 kgf·cm, 76 ft·lbf)
151. STABILIZE SUSPENSION (See page 27–32)
152. FULLY TIGHTEN UPPER CONTROL ARM ASSY (See page 27–32)
153. FULLY TIGHTEN REAR SUSPENSION ARM ASSY NO.1 LH (See page 27–27)
154. FULLY TIGHTEN REAR SUSPENSION ARM ASSY NO.1 RH
HINT:
Install the RH side by the same procedures as LH side.
155. CHECK FLUID LEVEL IN RESERVOIR (See page 32–6)
156. CHECK EXHAUST GAS LEAK (See page 15–4)
157. INSPECT AND ADJUST REAR WHEEL ALIGNMENT (See page 27–7)
158. CHECK ABS SPEED SENSOR SIGNAL (See page 05–316)

ON–VEHICLE INSPECTION

1. INSPECT FRONT AXLE HUB BEARING

(a) Remove the front wheel.

(b) Separate the front disc brake caliper assy (See page 30–56).

(c) Remove the front disc.

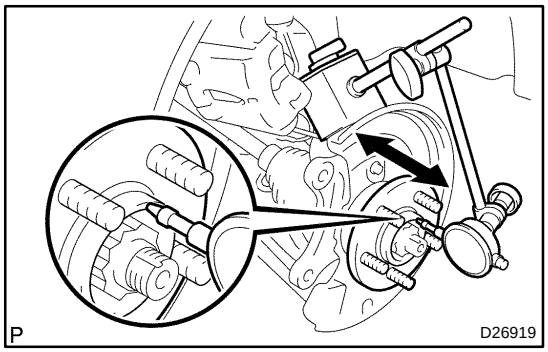

(d) Inspect the bearing backlash.

(1) Using a dial indicator, check the backlash near the center of the axle hub.

Maximum: 0.05 mm (0.0020 in.)

If the backlash exceeds the maximum, replace the front axle hub bearing.

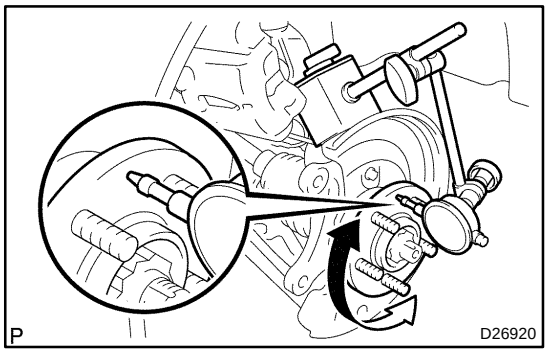

(e) Inspect the axle hub deviation.

(1) Using a dial indicator, check the deviation at the surface of the axle hub outside the hub bolt.

Maximum: 0.05 mm (0.0020 in.)

If the backlash exceeds the maximum, replace the front axle hub sub–assy.

(f) Install the front disc.

(g) Install the front disc brake caliper assy (See page 30–56).

(h) Install the front wheel.

Torque: 103 N·m (1,050 kgf·cm, 76 ft·lbf)

2. INSPECT REAR AXLE HUB BEARING

(a) Remove the rear wheel.

(b) Remove rear brake drum sub–assy.

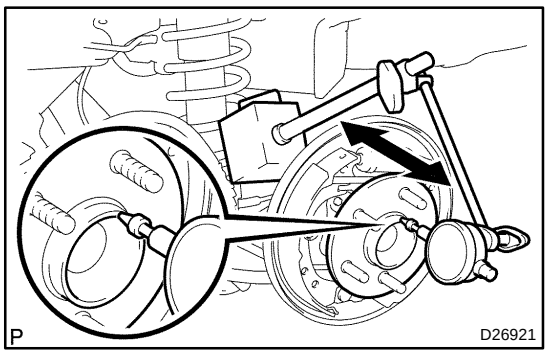

(c) Inspect the bearing backlash.

(1) Using a dial indicator, check the backlash near the center of the axle hub.

Maximum: 0.05 mm (0.0020 in.)

If the backlash exceeds the maximum, replace the rear axle hub & bearing assy.

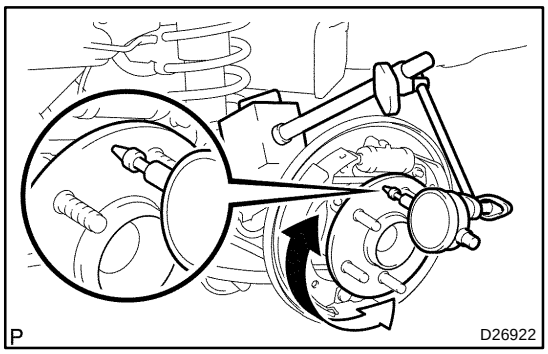

(d) Inspect the axle hub deviation.
  (1) Using a dial indicator, check the deviation at the surface of the axle hub outside the hub bolt.

Maximum: 0.07 mm (0.0028 in.)

If the backlash exceeds the maximum, replace the rear axle hub & bearing assy.

(e) Install the rear brake drum sub–assy.

(f) Install the rear wheel.

Torque: 103 N·m (1,050 kgf·cm, 76 ft·lbf)

DRIVE SHAFT, PROPELLER SHAFT, AXLE

300AY–01

PRECAUTION

1. NOTICE OF REMOVE AND INSTALLING FRONT DRIVE SHAFT ASSY RH

(a) When removing and installing the front drive shaft assy RH in the 4WD vehicle, drain all the transaxle oil and transfer oil. If the removal and installation is performed without draining these oils, the transfer oil will flow into the transaxle side, which will cause these 2 different oils to be mixed. In this case, cleaning inside the transaxle and the transfer is required.

3009Z–04

PROBLEM SYMPTOMS TABLE

Use the table below to help you find the cause of the problem. The numbers indicate the priority of the likely cause of the problem. Check each part in order. If necessary, replace these parts.

Symptom	Suspect Area		See page
Wander	6. Wheel		28–1
	7. Front wheel alignment		26–6
	8. Rear wheel alignment	FF:	27–6
		4WD:	27–7
	9. Hub bearing (Worn)		30–3
	10. Front shock absorber		26–10
	11. Rear shock absorber	FF:	27–11
		4WD:	27–7
Front wheel shimmy	1. Wheel (imbalance)		28–1
	2. Hub bearing (Worn)		30–3
	3. Lower suspension arm		26–15
	4. Lower ball joint (Worn)		26–20
	5. Front shock absorber		26–10
Noise (Front)	1. Front drive shaft	1ZZ–FE:	30–15
		2ZZ–FE:	30–32
	2. Front shock absorber		26–10
	3. Hub bearing (Worn)		30–3
	4. Lower ball joint (Worn)		26–20
Noise (Rear)	1. Rear drive shaft	4WD:	30–46
	2. Hub & bearing (Worn)	FF:	30–3
		4WD:	30–3
	3. Rear shock absorber	FF:	27–11
		4WD:	27–16
Vibration or noise (Propeller w/center bearing shaft)	1. Center support bearing		30–6
	2. Propeller and intermediate shafts (Runout)		30–6

FRONT AXLE HUB SUB–ASSY LH

300A3–03

COMPONENTS

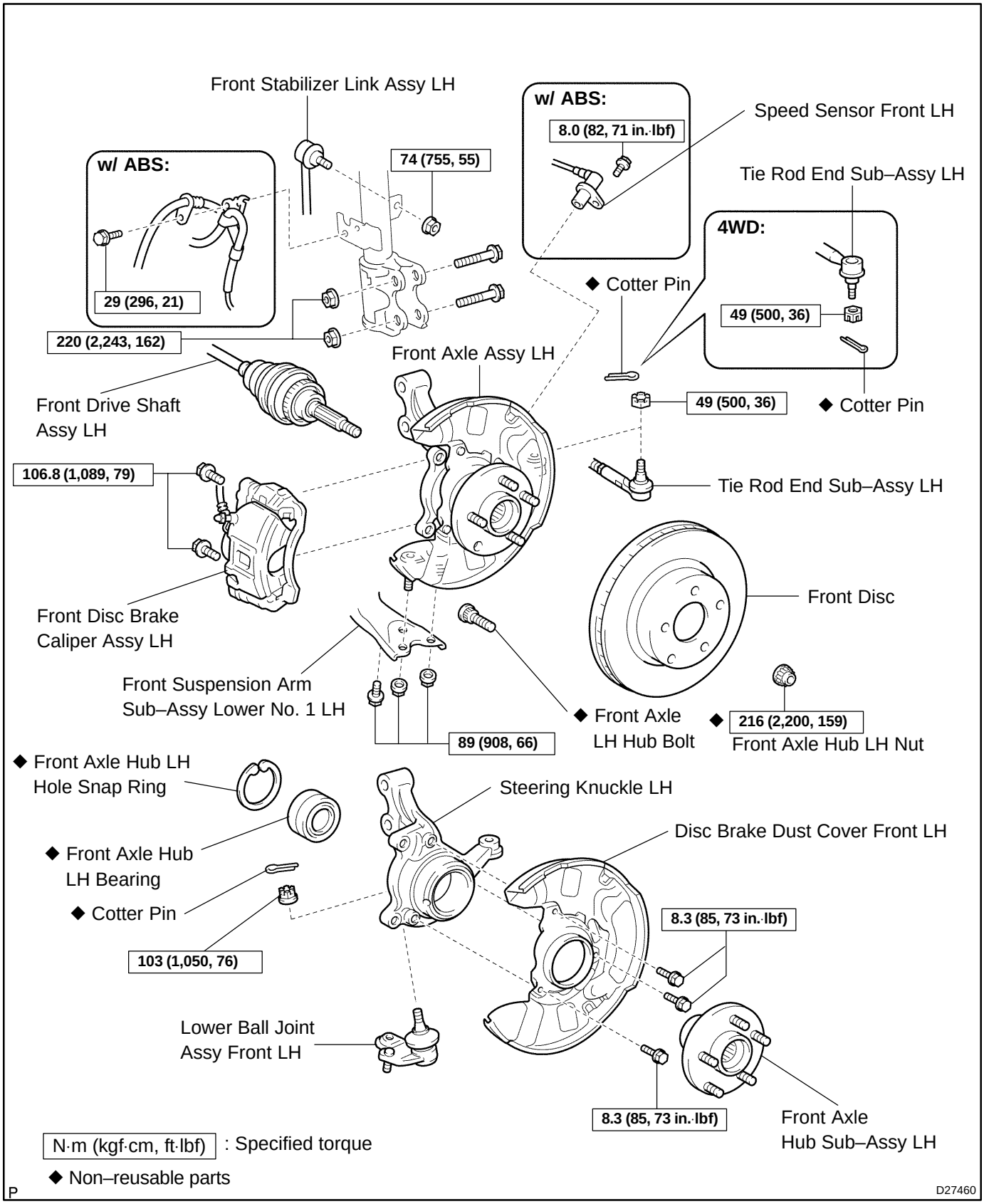

300A4–03

REPLACEMENT

1. **REMOVE FRONT WHEEL**
2. **REMOVE FRONT AXLE HUB LH NUT (See page 30–15 or 30–32)**
   SST 09930–00010
3. **SEPARATE FRONT STABILIZER LINK ASSY LH (See page 30–15 or 30–32)**
4. **SEPARATE SPEED SENSOR FRONT LH (W/ ABS) (See page 30–15 or 30–32)**

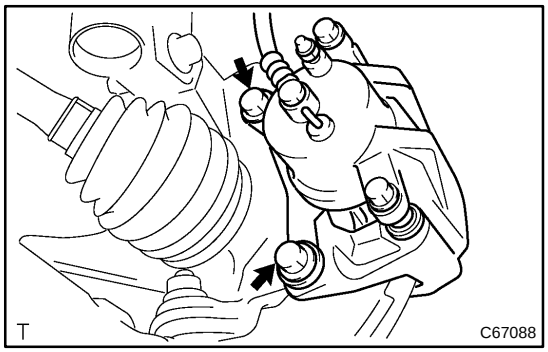

5. **SEPARATE FRONT DISC BRAKE CALIPER ASSY LH**

(a) Remove the 2 bolts, separate the brake caliper assy LH from the steering knuckle.

6. **REMOVE FRONT DISC**
7. **SEPARATE TIE ROD END SUB–ASSY LH (See page 30–15 or 30–32)**
   SST 09628–62011
8. **SEPARATE FRONT SUSPENSION ARM SUB–ASSY LOWER NO.1 LH (See page 30–15 or 30–32)**

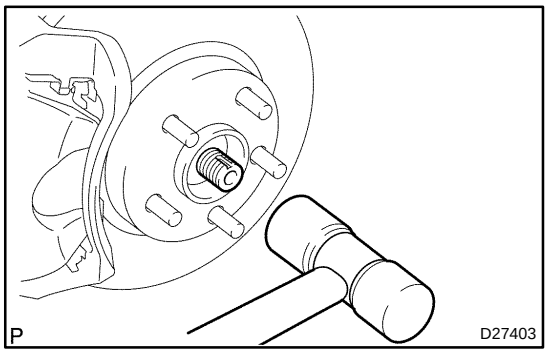

9. **REMOVE FRONT AXLE ASSY LH**

(a) Using a plastic hammer, separate the drive shaft from the axle hub.

NOTICE:

- **Be careful not to damage the boot.**
- **w/ ABS:**
  Be careful not to damage the speed sensor rotor.

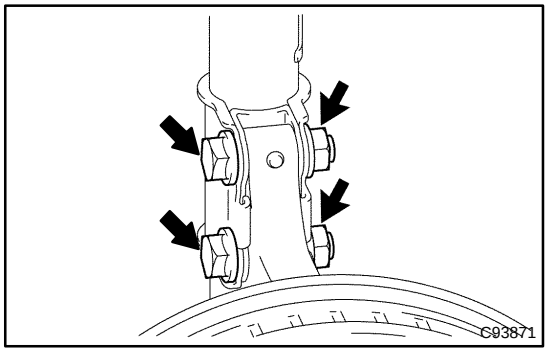

(b) Remove the 2 bolts, 2 nuts and front axle assy LH.

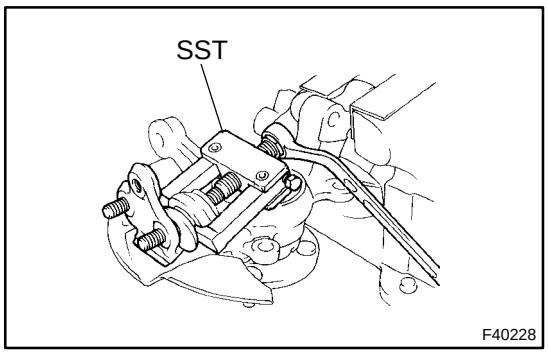

10. REMOVE LOWER BALL JOINT ASSY FRONT LH

(a) Remove the cotter pin and nut.

(b) Using SST, remove the lower ball joint assy front LH.
SST 09628–62011

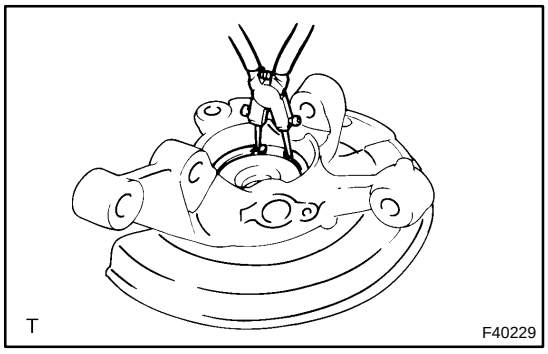

11. REMOVE FRONT AXLE HUB LH HOLE SNAP RING

(a) Using a snap ring pliers, remove the LH hole snap ring.

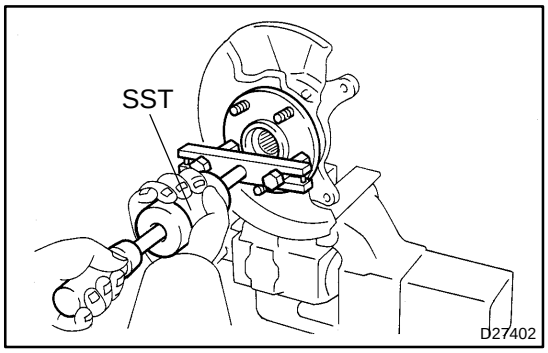

12. REMOVE FRONT AXLE HUB SUB–ASSY LH

(a) Using SST, remove the hub sub–assy LH.
SST 09520–00031

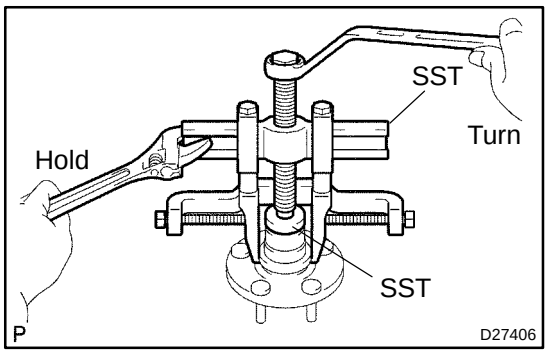

(b) Using SST, remove the inner race of hub LH bearing from the hub sub–assy LH.
SST 09950–40011 (09951–04020, 09952–04010, 09953–04030, 09954–04010, 09955–04061, 09957–04010, 09958–04011), 09950–60010 (09951–00370)

13. REMOVE DISC BRAKE DUST COVER FRONT LH

(a) Remove the 3 bolts and dust cover front LH.

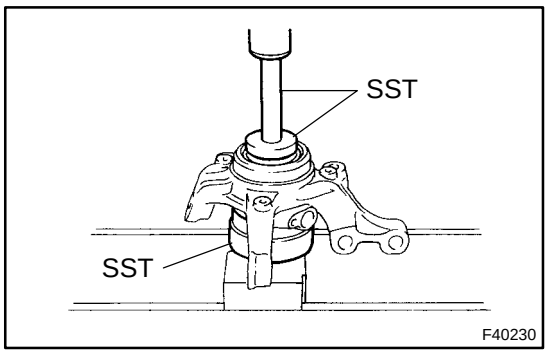

14. REMOVE FRONT AXLE HUB LH BEARING

(a) Place the inner race of hub LH bearing on the outer race of hub LH bearing.

(b) Using SST and a press, remove the hub LH bearing from the steering knuckle.

SST 09527–17011, 09950–60010 (09951–00640), 09950–70010 (09951–07100)

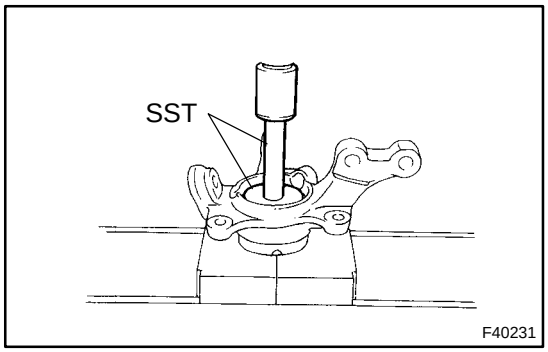

15. INSTALL FRONT AXLE HUB LH BEARING

(a) Using SST and a press, install a new hub LH bearing to the steering knuckle.

SST 09950–60020 (09951–00720), 09950–70010 (09951–07100)

16. INSTALL DISC BRAKE DUST COVER FRONT LH

(a) Install the dust cover front LH with the 3 bolts.

Torque: 8.3 N·m (85 kgf·cm, 73 in.·lbf)

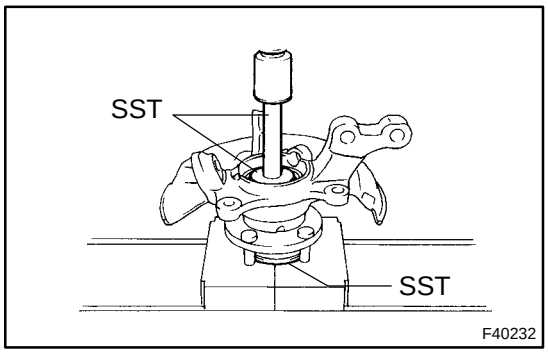

17. INSTALL FRONT AXLE HUB SUB–ASSY LH

(a) Using SST and a press, install the hub sub–assy LH.

SST 09608–32010, 09950–60010 (09951–00600), 09950–70010 (09951–07100)

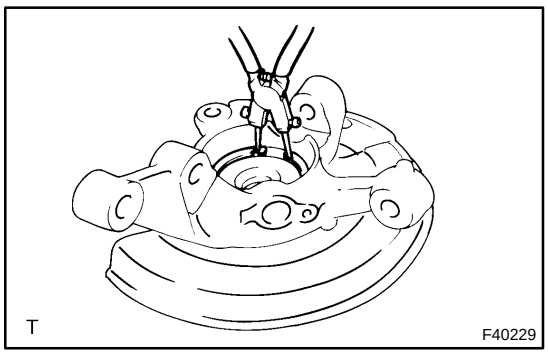

18. INSTALL FRONT AXLE HUB LH HOLE SNAP RING

(a) Using snap ring pliers, install a new LH hole snap ring.

19. INSTALL LOWER BALL JOINT ASSY FRONT LH

(a) Install the lower ball joint assy front LH, torque the nut.
Torque: 103 N·m (1,050 kgf·cm, 76 ft·lbf)

(b) Install a new cotter pin.

NOTICE:
If the holes for the cotter pin are not aligned, tighten the nut further up to 60°.

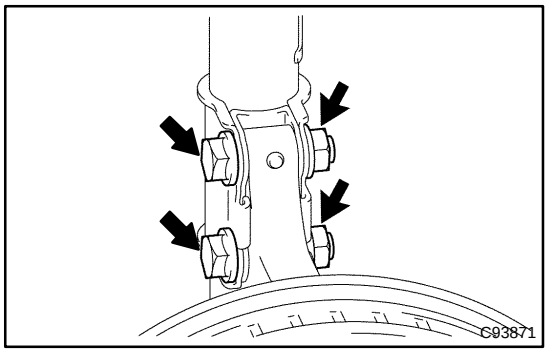

20. INSTALL FRONT AXLE ASSY LH

(a) Install the 2 bolts, nuts and front axle assy LH to the shock absorber.
Torque: 220 N·m (2,243 kgf·cm, 162 ft·lbf)

NOTICE:
Only when reusing the bolts and nuts, apply engine oil to the screw part of the nuts.

(b) Push the front axle assy toward the outside of the vehicle, fit the splined part of the drive shaft assy to that of the front axle assy and insert the drive shaft assy into the front axle assy.

NOTICE:
- **Do not push out the front axle assy excessively.**
- **Be careful not to damage the drive shaft outboard joint boot.**
- **w/ ABS:**
  Be careful not to damage the speed sensor rotor.

21. INSTALL FRONT SUSPENSION ARM SUB–ASSY LOWER NO.1 LH (See page 30–15 or 30–32)

22. INSTALL TIE ROD END SUB–ASSY LH (See page 30–15 or 30–32)

23. INSTALL FRONT STABILIZER LINK ASSY LH (See page 30–15 or 30–32)

24. INSTALL FRONT DISC

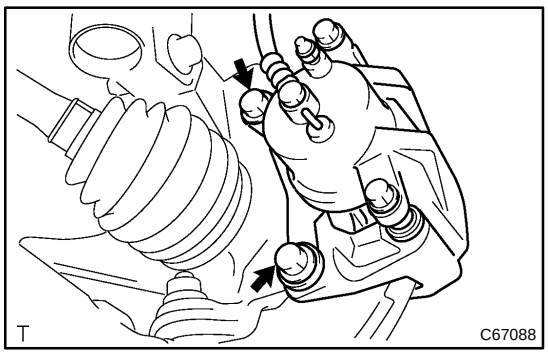

25. INSTALL FRONT DISC BRAKE CALIPER ASSY LH

(a) Install the brake caliper assy with the 2 bolts to the steering knuckle.
Torque: 106.8 N·m (1,089 kgf·cm, 79 ft·lbf)

26. INSTALL FRONT AXLE HUB LH NUT

(a) Using a socket wrench (30 mm), install a new hub LH nut.
Torque: 216 N·m (2,203 kgf·cm, 159 ft·lbf)

27. SEPARATE FRONT DISC BRAKE CALIPER ASSY LH

28. REMOVE FRONT DISC

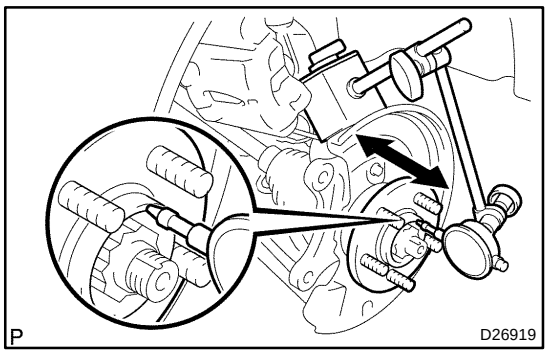

29. INSPECT BEARING BACKLASH

(a) Using a dial indicator, check the backlash near the center of the axle hub.

Maximum: 0.05 mm (0.0020 in.)

If the backlash exceeds the maximum, replace the front axle hub bearing.

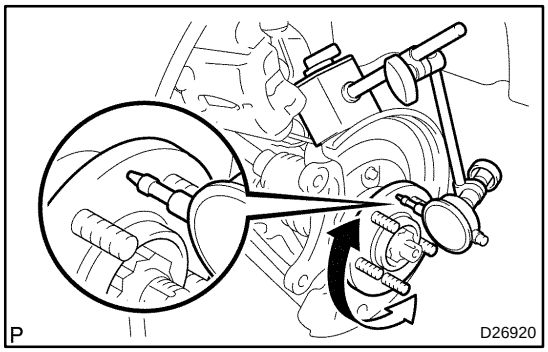

30. INSPECT AXLE HUB DEVIATION

(a) Using a dial indicator, check the deviation at the surface of the axle hub outside the hub bolt.

Maximum: 0.05 mm (0.0020 in.)

If the backlash exceeds the maximum, replace the front axle hub sub–assy.

31. INSTALL FRONT DISC

32. INSTALL FRONT DISC BRAKE CALIPER ASSY LH

33. INSTALL SPEED SENSOR FRONT LH (W/ ABS) (See page 30–15 or 30–32)

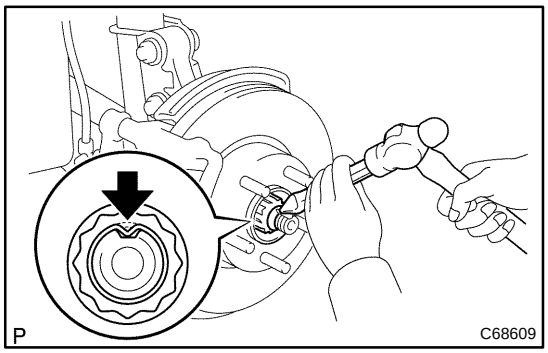

34. INSTALL FRONT AXLE HUB LH NUT

(a) Using a chisel and a hammer, stake the hub LH nut.

35. INSTALL FRONT WHEEL

Torque: 103 N·m (1,050 kgf·cm, 76 in.·lbf)

36. INSPECT AND ADJUST FRONT WHEEL ALIGNMENT (See page 26–6)

37. CHECK ABS SPEED SENSOR SIGNAL (W/ ABS) (See page 05–316)

REAR AXLE HUB & BEARING ASSY LH (FF)

300A6–03

COMPONENTS

Disc Rear Brake Type:

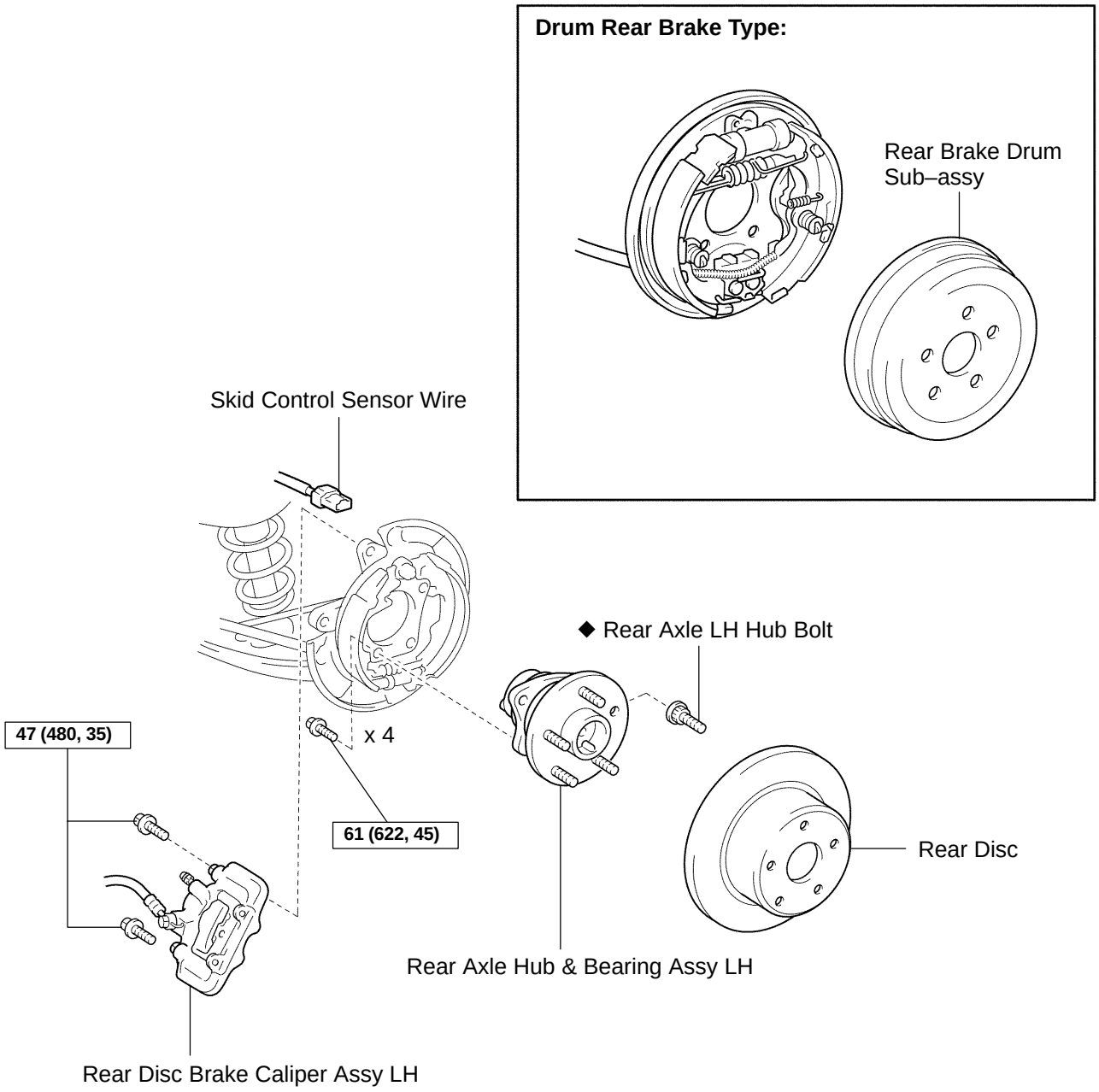

N·m (kgf·cm, ft·lbf) : Specified torque

◆ Non–reusable part

P

F16607

300B7–01

REPLACEMENT

1. REMOVE REAR WHEEL

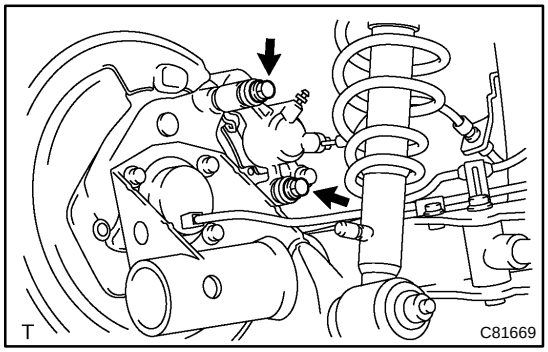

2. SEPARATE REAR DISC BRAKE CALIPER ASSY LH (DISC REAR BRAKE TYPE)

(a) Remove the 2 bolts, separate the rear disc brake caliper assy LH.

3. REMOVE REAR DISC (DISC REAR BRAKE TYPE)

4. REMOVE REAR BRAKE DRUM SUB–ASSY (DRUM REAR BRAKE TYPE)

5. DISCONNECT SKID CONTROL SENSOR WIRE (W/ ABS)

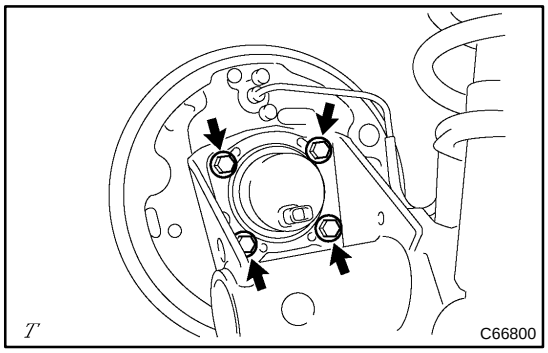

6. REMOVE REAR AXLE HUB & BEARING ASSY LH

(a) Remove the 4 bolts and hub & bearing assy LH.

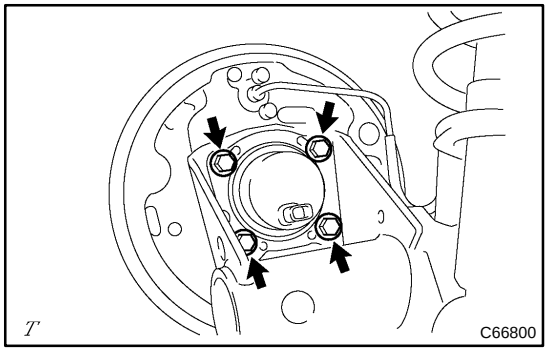

7. INSTALL REAR AXLE HUB & BEARING ASSY LH

(a) Install the hub & bearing assy LH with the 4 bolts.
Torque: 61 N·m (622 kgf·cm, 45 ft·lbf)

8. CONNECT SKID CONTROL SENSOR WIRE (W/ ABS)

NOTICE:

Do not twist the sensor wire when connecting it.

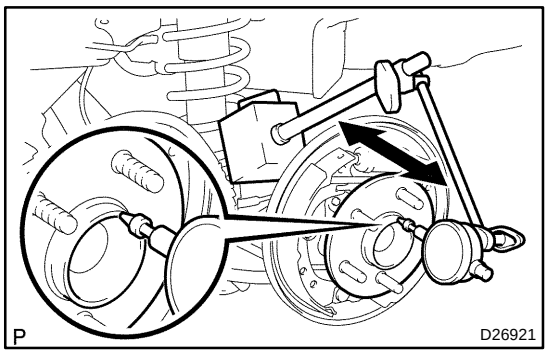

9. INSPECT BEARING BACKLASH

(a) Using a dial indicator, check the backlash near the center of the axle hub.
Maximum: 0.05 mm (0.0020 in.)

If the backlash exceeds the maximum, replace the rear axle hub & bearing assy.

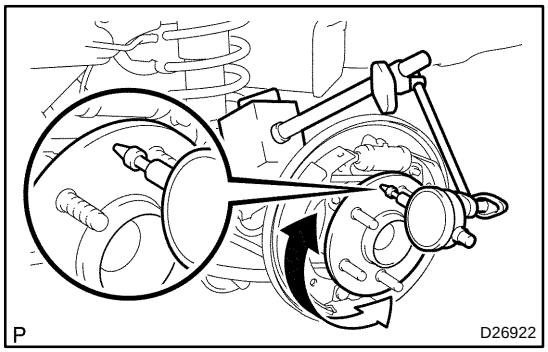

10. INSPECT AXLE HUB DEVIATION

(a) Using a dial indicator, check the deviation at the surface of the axle hub outside the hub bolt.
Maximum: 0.07 mm (0.0028 in.)

If the backlash exceeds the maximum, replace the rear axle hub & bearing assy.

11. INSTALL REAR DISC (DISC REAR BRAKE TYPE)

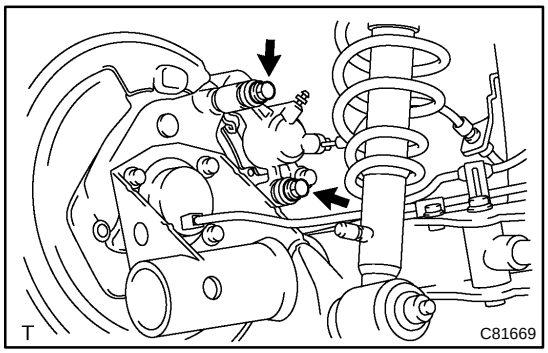

12. INSTALL REAR DISC BRAKE CALIPER ASSY LH (DISC REAR BRAKE TYPE)

(a) Install the rear disc brake caliper assy LH with 2 bolts.
Torque: 47 N·m (479 kgf·cm, 35 ft·lbf)

13. INSTALL REAR BRAKE DRUM SUB–ASSY (DRUM REAR BRAKE TYPE)

14. INSTALL REAR WHEEL
Torque: 103 N·m (1,050 kgf·cm, 76 ft·lbf)

15. CHECK ABS SPEED SENSOR SIGNAL (W/ ABS) (See page 05–316)

REAR AXLE LH HUB BOLT

300BA–01

REPLACEMENT

HINT:

COMPONENTS:

FF: See page 30–62

4WD: See page 30–65

1. **REMOVE REAR WHEEL**
2. **SEPARATE REAR DISC BRAKE CALIPER ASSY, LH (DISC REAR BRAKE TYPE) (See page 30–63)**
3. **REMOVE REAR DISC (DISC REAR BRAKE TYPE)**
4. **SEPARATE REAR STABILIZER LINK ASSY LH (4WD DRIVE TYPE) (See page 30–66)**
5. **REMOVE REAR AXLE SHAFT LH NUT (4WD DRIVE TYPE) (See page 30–66)**
   SST 09930–00010
6. **REMOVE REAR BRAKE DRUM SUB–ASSY (DRUM REAR BRAKE TYPE)**
7. **SEPARATE SPEED SENSOR REAR LH (4WD DRIVE TYPE) (See page 30–66)**
8. **REMOVE PARKING BRAKE SHOE STRUT SET LH (4WD DRIVE TYPE) (See page 32–41)**
   SST 09703–30010
9. **REMOVE FRONT BRAKE SHOE (4WD DRIVE TYPE) (See page 32–41)**
   SST 09718–00010
10. **REMOVE REAR BRAKE AUTOMATIC ADJUST LEVER LH (4WD DRIVE TYPE) (See page 32–41)**
11. **REMOVE REAR BRAKE SHOE (4WD DRIVE TYPE) (See page 32–41)**
    SST 09718–00010
12. **SEPARATE PARKING BRAKE CABLE ASSY NO.3 (4WD DRIVE TYPE) (See page 32–41)**
13. **SEPARATE REAR BRAKE TUBE NO.4 (4WD DRIVE TYPE) (See page 30–66)**
    SST 09023–00100
14. **SEPARATE REAR SUSPENSION ARM ASSY NO.1 LH (4WD DRIVE TYPE) (See page 30–66)**
15. **SEPARATE UPPER CONTROL ARM ASSY (4WD DRIVE TYPE) (See page 30–66)**
16. **REMOVE AXLE ASSY RR LH (4WD DRIVE TYPE) (See page 30–66)**
17. **REMOVE REAR WHEEL BEARING DUST DEFLECTOR NO.1 LH (4WD DRIVE TYPE) (See page 30–66)**
18. **REMOVE REAR AXLE HUB & BEARING ASSY LH (4WD DRIVE TYPE) (See page 30–66)**

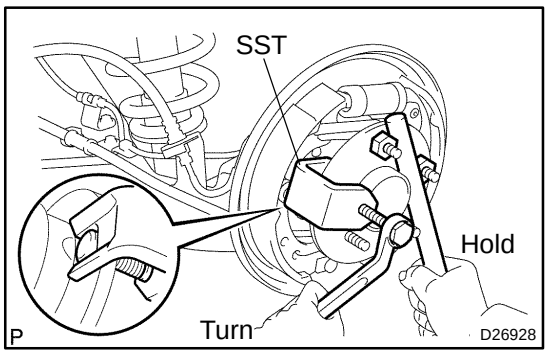

19. **REMOVE REAR AXLE LH HUB BOLT (2WD DRIVE TYPE)**

(a) Using SST and a hammer handle or an equivalent, remove the LH hub bolt.
SST 09628–10011

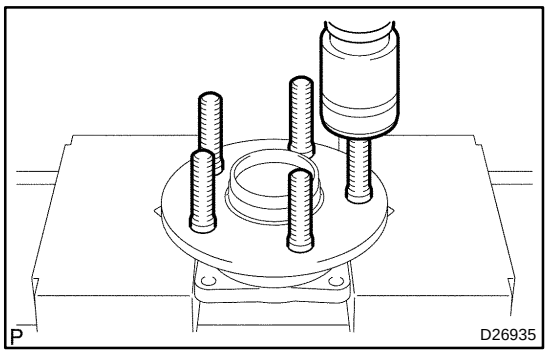

20. REMOVE REAR AXLE LH HUB BOLT (4WD DRIVE TYPE)

(a) Using a press, remove the LH hub bolt.

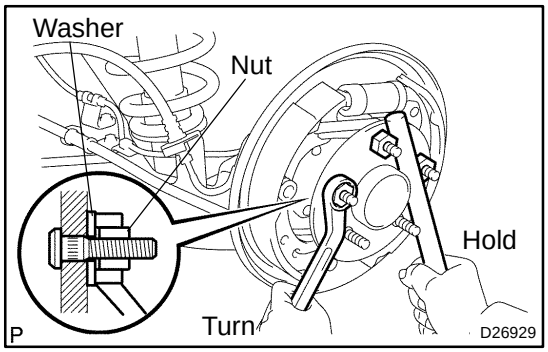

21. INSTALL REAR AXLE LH HUB BOLT (2WD DRIVE TYPE)

(a) Install a washer and nut to a new LH hub bolt as shown in the illustration.

(b) Using a hammer handle or an equivalent to hold the hub & bearing assy, install the LH hub bolt by tightening the nut.

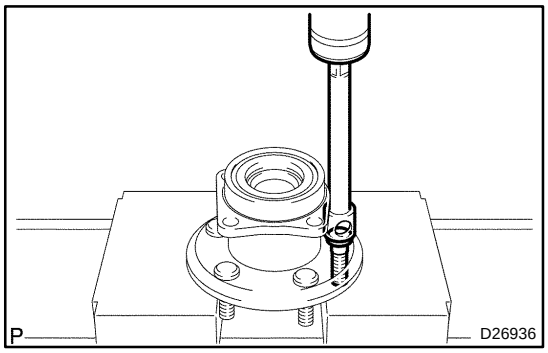

22. INSTALL REAR AXLE LH HUB BOLT (4WD DRIVE TYPE)

(a) Using a press and a extension bar, install a new LH hub bolt.

23. INSTALL REAR AXLE HUB & BEARING ASSY LH (4WD DRIVE TYPE) (See page 30–66)

24. INSTALL REAR WHEEL BEARING DUST DEFLECTOR NO.1 LH (4WD DRIVE TYPE) (See page 30–66)

SST 09608–10010, 09950–60020 (09951–00680), 09950–70010 (09951–07100)

25. TEMPORARY TIGHTEN UPPER CONTROL ARM ASSY (4WD DRIVE TYPE) (See page 30–66)

26. INSTALL AXLE ASSY RR LH (4WD DRIVE TYPE) (See page 30–66)

27. TEMPORARY TIGHTEN REAR SUSPENSION ARM ASSY NO.1 LH (4WD DRIVE TYPE) (See page 30–66)

28. INSTALL REAR BRAKE TUBE NO.4 (4WD DRIVE TYPE) (See page 30–66)

SST 09023–00100

29. CONNECT PARKING BRAKE CABLE ASSY NO.3 (4WD DRIVE TYPE) (See page 32–41)

30. APPLICATION HIGH TEMPERATURE GREASE (4WD DRIVE TYPE) (See page 32–41)

31. INSTALL REAR BRAKE SHOE (4WD DRIVE TYPE) (See page 32–41)

SST 09718–00010

32. INSTALL REAR BRAKE AUTOMATIC ADJUST LEVER LH (4WD DRIVE TYPE) (See page 32–41)

33. INSTALL FRONT BRAKE SHOE (4WD DRIVE TYPE) (See page 32–41)

SST 09718–00010

34. INSTALL PARKING BRAKE SHOE STRUT SET LH (4WD DRIVE TYPE) (See page 32–41)

35. SPEED SENSOR REAR LH (4WD DRIVE TYPE) (See page 30–66)

36. CHECK REAR DRUM BRAKE INSTALLATION (4WD DRIVE TYPE) (See page 32–41)
37. INSTALL REAR BRAKE DRUM SUB–ASSY (DRUM REAR BRAKE TYPE)
38. INSTALL REAR AXLE SHAFT LH NUT (4WD DRIVE TYPE) (See page 30–66)
39. REMOVE REAR BRAKE DRUM SUB–ASSY (4WD DRIVE TYPE)
40. INSPECT BEARING BACKLASH (4WD DRIVE TYPE) (See page 30–66)
41. INSPECT AXLE HUB DEVIATION (4WD DRIVE TYPE) (See page 30–66)
42. INSTALL REAR BRAKE DRUM SUB–ASSY (4WD DRIVE TYPE)
43. ADJUST REAR DRUM BRAKE SHOE CLEARANCE (4WD DRIVE TYPE) (See page 32–41)
44. INSTALL REAR AXLE SHAFT LH NUT (4WD DRIVE TYPE) (See page 30–66)
45. INSTALL REAR STABILIZER LINK ASSY LH (4WD DRIVE TYPE) (See page 30–66)
46. BLEED BRAKE LINE (4WD DRIVE TYPE) (See page 32–6)
47. INSTALL REAR DISC (DISC REAR BRAKE TYPE)
48. INSTALL REAR DISC BRAKE CALIPER ASSY, LH (DISC REAR BRAKE TYPE) (See page 30–63)
49. INSTALL REAR WHEEL
    Torque: 103 N·m (1,050 kgf·cm, 76 ft·lbf)
50. STABILIZE SUSPENSION (4WD DRIVE TYPE)
51. FULLY TIGHTEN UPPER CONTROL ARM ASSY (4WD DRIVE TYPE) (See page 27–32)
52. FULLY TIGHTEN REAR SUSPENSION ARM ASSY NO.1 LH (4WD DRIVE TYPE) (See page 27–27)
53. CHECK FLUID LEVEL IN RESERVOIR (4WD DRIVE TYPE)
54. INSPECT AND ADJUST REAR WHEEL ALIGNMENT (4WD DRIVE TYPE) (See page 27–7)
55. CHECK ABS SPEED SENSOR SIGNAL (4WD DRIVE TYPE) (See page 05–316)

REAR AXLE CARRIER SUB–ASSY LH (4WD)

300B8–01

COMPONENTS

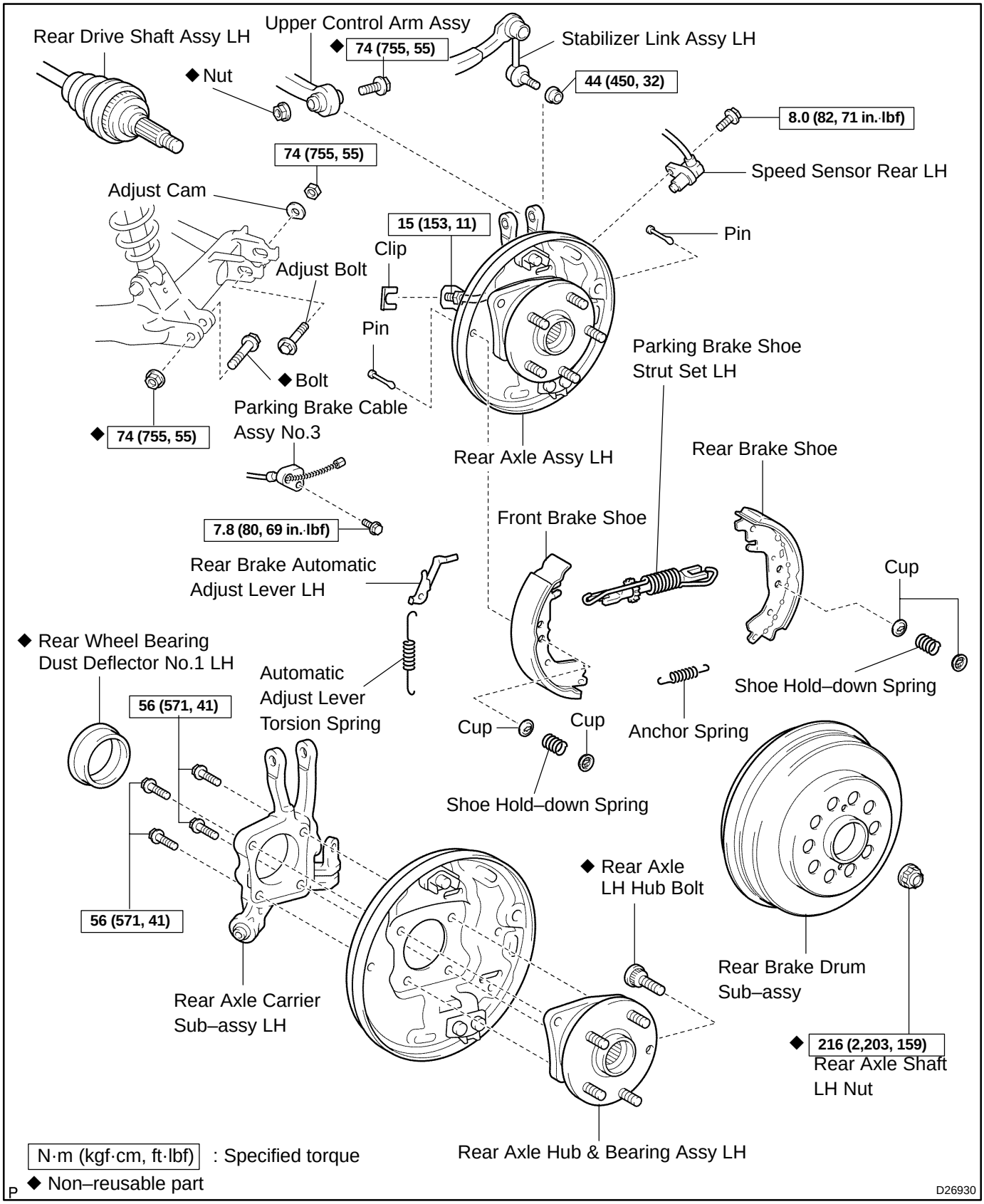

300B9–01

REPLACEMENT

1. REMOVE REAR WHEEL

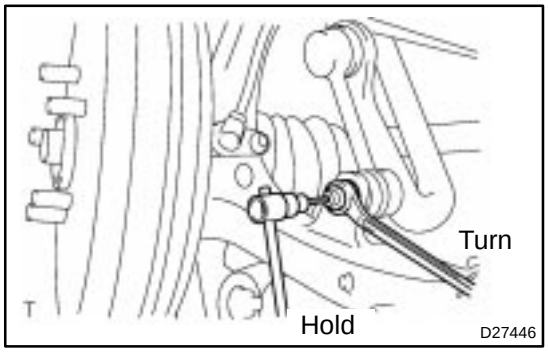

2. SEPARATE REAR STABILIZER LINK ASSY LH

(a) Remove the nut, separate the rear stabilizer link assy LH.

HINT:

If the ball joint turns together with the nut, use a hexagon wrench (5 mm) to hold the stud.

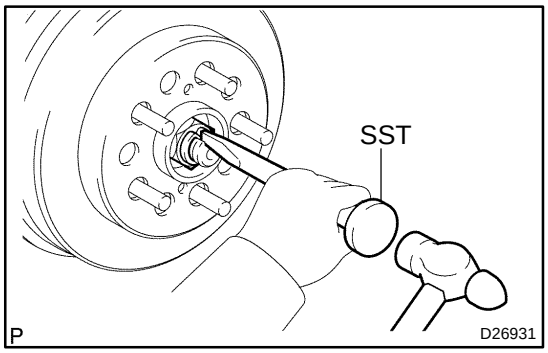

3. REMOVE REAR AXLE SHAFT LH NUT

(a) Using SST and a hammer, unstake the staked part of the rear axle shaft LH nut.
SST 09930–00010

(b) Using a socket wrench (30 mm), remove the rear axle shaft LH nut.

NOTICE:

Loosen the staked part of the nut completely, otherwise the screw of the drive shaft may be damaged.

4. REMOVE REAR BRAKE DRUM SUB–ASSY

5. SEPARATE SPEED SENSOR REAR LH

(a) Remove the bolt, separate the speed sensor rear LH.

6. REMOVE PARKING BRAKE SHOE STRUT SET LH (See page 32–41)
SST 09703–30010

7. REMOVE FRONT BRAKE SHOE (See page 32–41)
SST 09718–00010

8. REMOVE REAR BRAKE AUTOMATIC ADJUST LEVER LH (See page 32–41)
SST 09718–00010

9. REMOVE REAR BRAKE SHOE (See page 32–41)
SST 09718–00010

10. SEPARATE PARKING BRAKE CABLE ASSY NO.3 (See page 32–41)

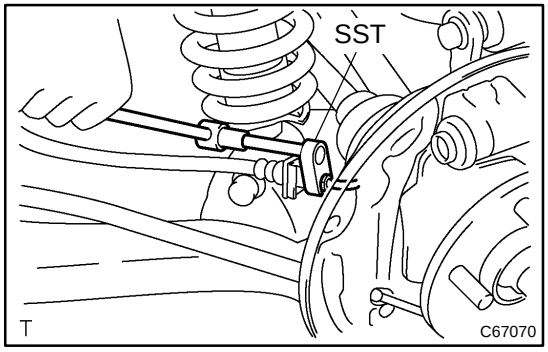

11. SEPARATE REAR BRAKE TUBE NO.4

(a) Using SST, separate the rear brake tube No.4.
SST 09023–00100

HINT:

Use a container to catch the brake fluid.

(b) Remove the clip, separate the flexible hose.

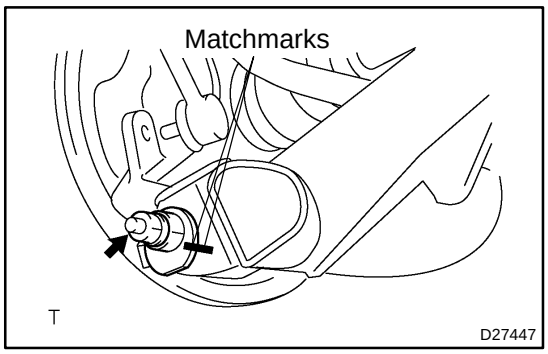

12. SEPARATE REAR SUSPENSION ARM ASSY NO.1 LH

(a) Place matchmarks on the camber adjust cam.

(b) Remove the nut, bolt and camber adjust cam.

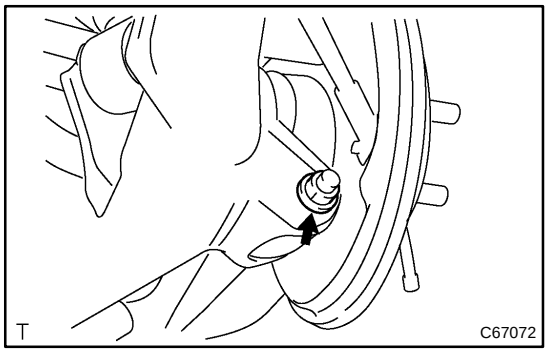

(c) Remove the nut and bolt, separate the rear suspension arm assy No.1 LH.

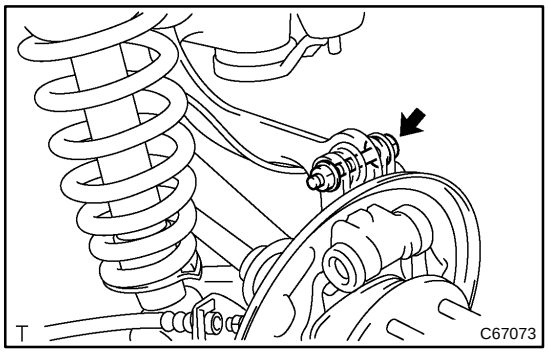

13. SEPARATE UPPER CONTROL ARM ASSY

(a) Remove the nut and bolt, separate the upper control arm assy.

HINT:

Keep the nut fixed while loosening and removing the bolt.

14. REMOVE REAR AXLE ASSY LH

(a) Using a plastic hammer, separate the axle assy RR LH from the drive shaft, then remove it.

NOTICE:

Be careful not to damage the boot and speed sensor rotor.

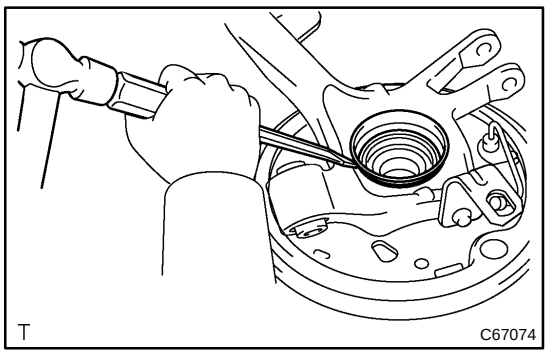

15. REMOVE REAR WHEEL BEARING DUST DEFLECTOR NO.1 LH

(a) Using a screw driver and a hammer, remove the dust deflector No.1 LH.

NOTICE:

Be careful not to damage the axle carrier.

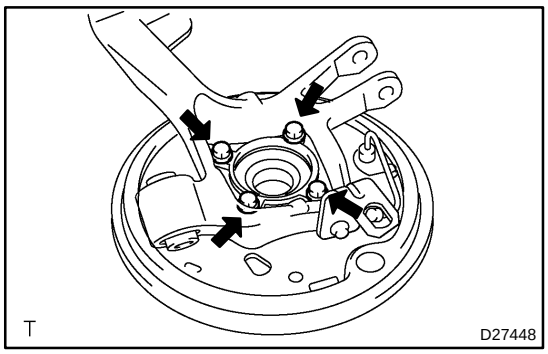

16. REMOVE REAR AXLE CARRIER SUB–ASSY LH

(a) Remove the 4 bolts, hub & bearing assy LH and carrier sub–assy LH.

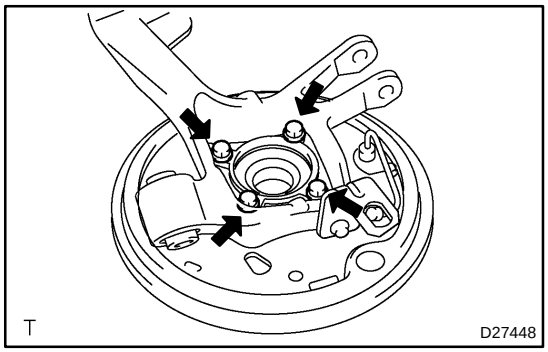

17. INSTALL REAR AXLE CARRIER SUB–ASSY LH

(a) Install the hub & bearing assy LH and carrier sub–assy LH with 4 bolts.

Torque: 56 N·m (571 kgf·cm, 41 ft·lbf)

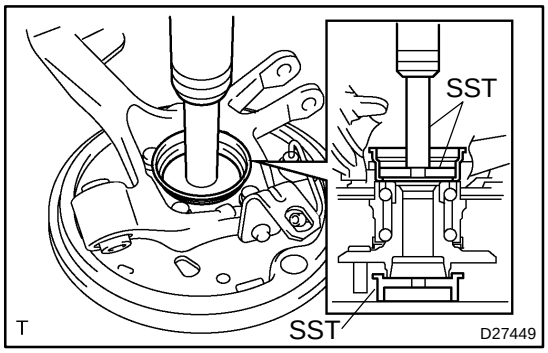

18. INSTALL REAR WHEEL BEARING DUST DEFLECTOR NO.1 LH

(a) Using SST and a press, install a new dust deflector No.1.

SST 09608–10010, 09950–60020 (09951–00680), 09950–70010 (09951–07100)

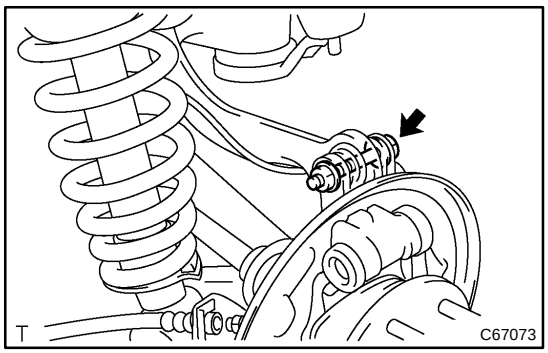

19. TEMPORARY TIGHTEN UPPER CONTROL ARM ASSY

(a) Temporarily tighten the upper control arm assy with a new bolt and nut.

20. INSTALL REAR AXLE ASSY LH

(a) Fit the splins, insert the front drive shaft assy LH into the axle assy RR LH.

NOTICE:

Be careful not to damage the boot and speed sensor rotor.

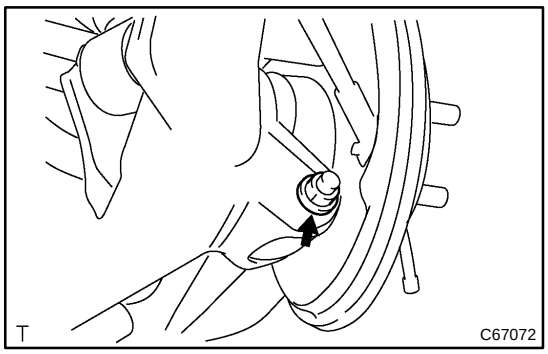

21. TEMPORARY TIGHTEN REAR SUSPENSION ARM ASSY NO.1 LH

(a) Temporarily tighten the rear suspension arm assy No.1 LH with a new bolt and nut.

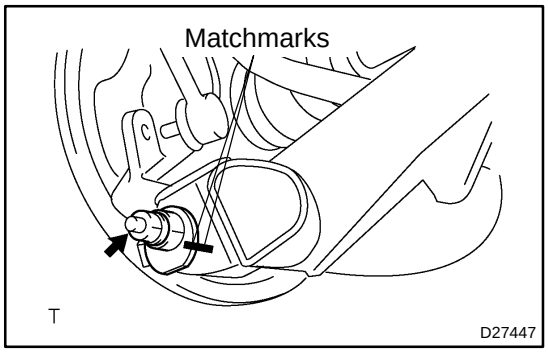

(b) Temporarily tighten the adjust cam and adjust bolt with nut.

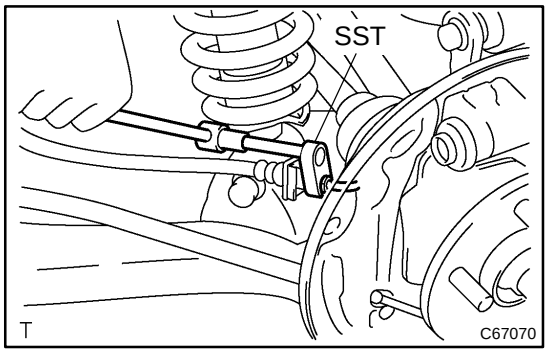

22. INSTALL REAR BRAKE TUBE NO.4

(a) Install the flexible hose with clip.

(b) Using SST, install the rear brake tube No.4.
SST 09023–00100
Torque: 15 N·m (153 kgf·cm, 11 ft·lbf)

23. CONNECT PARKING BRAKE CABLE ASSY NO.3 (See page 32–41)

24. APPLICATION HIGH TEMPERATURE GREASE (See page 32–41)

25. INSTALL REAR BRAKE SHOE (See page 32–41)
SST 09718–00010

26. INSTALL REAR BRAKE AUTOMATIC ADJUST LEVER LH (See page 32–41)

27. INSTALL FRONT BRAKE SHOE (See page 32–41)
SST 09718–00010

28. INSTALL PARKING BRAKE SHOE STRUT SET LH (See page 32–41)

29. INSTALL SPEED SENSOR REAR LH
Torque: 8.0 N·m (82 kgf·cm, 71 ft·lbf)

NOTICE:

- **Be careful not to damage the speed sensor.**
- **Keep the speed sensor clean.**
- **Do not twist the sensor wire when installing the sensor.**

30. CHECK REAR DRUM BRAKE INSTALLATION (See page 32–41)

31. INSTALL REAR BRAKE DRUM SUB–ASSY

32. INSTALL REAR AXLE SHAFT LH NUT

(a) Using a socket wrench (30 mm), install a new rear axle shaft LH nut.
Torque: 216 N·m (2,203 kgf·cm, 159 ft·lbf)

33. REMOVE REAR BRAKE DRUM SUB–ASSY

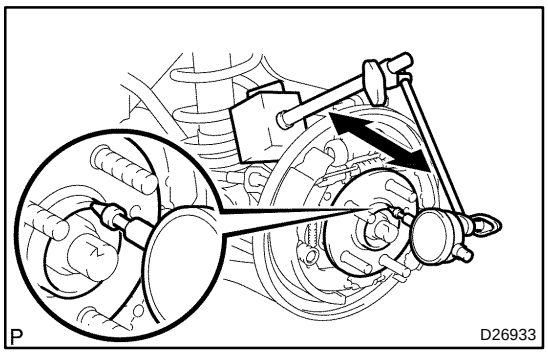

34. INSPECT BEARING BACKLASH

(a) Using a dial indicator, check the backlash near the center of the hub & bearing assy.

Maximum: 0.05 mm (0.0020 in.)

If the backlash exceeds the maximum, replace the hub & bearing assy.

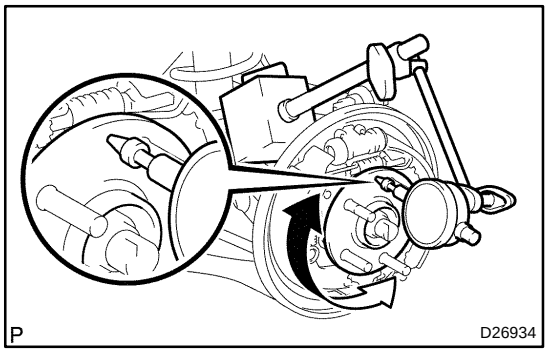

35. INSPECT AXLE HUB DEVIATION

(a) Using a dial indicator, check the deviation at the surface of the hub & bearing assy outside the hub bolt.

Maximum: 0.07 mm (0.0028 in.)

If the deviation exceeds the maximum, replace the hub & bearing assy.

36. INSTALL REAR BRAKE DRUM SUB–ASSY

37. ADJUST REAR DRUM BRAKE SHOE CLEARANCE (See page 32–41)

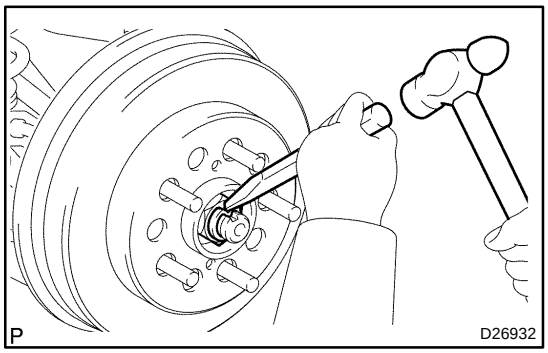

38. INSTALL REAR AXLE SHAFT LH NUT

(a) Using a chisel and a hammer, stake the rear axle shaft LH nut.

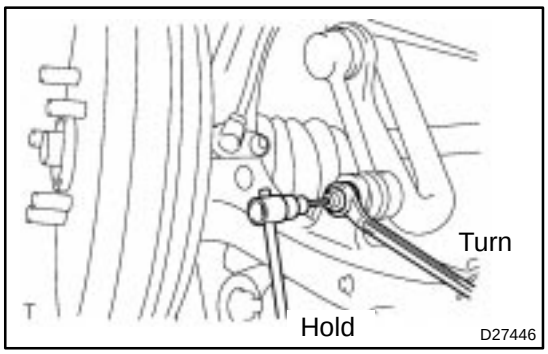

39. INSTALL REAR STABILIZER LINK ASSY LH

(a) Install the rear stabilizer link assy LH with the nut.

Torque: 44 N·m (450 kgf·cm, 32 ft·lbf)

HINT:

If the ball joint turns together with the nut, use a hexagon wrench (5 mm) to hold the stud.

40. BLEED BRAKE LINE (See page 32–6)

41. INSTALL REAR WHEEL

Torque: 103 N·m (1,050 kgf·cm, 76 ft·lbf)

42. STABILIZE SUSPENSION

43. FULLY TIGHTEN UPPER CONTROL ARM ASSY (See page 27–32)

44. FULLY TIGHTEN REAR SUSPENSION ARM ASSY NO.1 LH (See page 27–27)
45. CHECK FLUID LEVEL IN RESERVOIR
46. INSPECT AND ADJUST REAR WHEEL ALIGNMENT (See page 27–7)
47. CHECK ABS SPEED SENSOR SIGNAL (See page 05–316)

FRONT AXLE LH HUB BOLT

REPLACEMENT

300A5–03

HINT:

COMPONENTS: See page 30–55

1. **REMOVE FRONT WHEEL**
2. **SEPARATE FRONT DISC BRAKE CALIPER ASSY LH (See page 30–56)**
3. **REMOVE FRONT DISC**

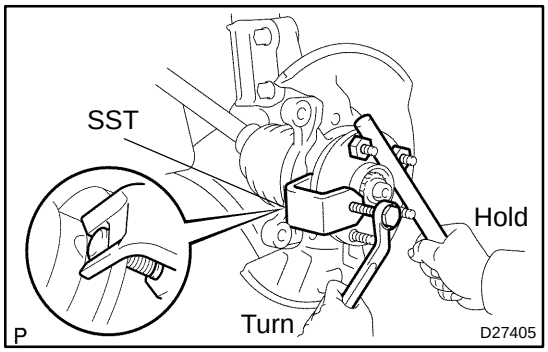

4. **REMOVE FRONT AXLE LH HUB BOLT**

(a) Using SST and a hammer handle or an equivalent, remove the LH hub bolt.
SST 09628–10011

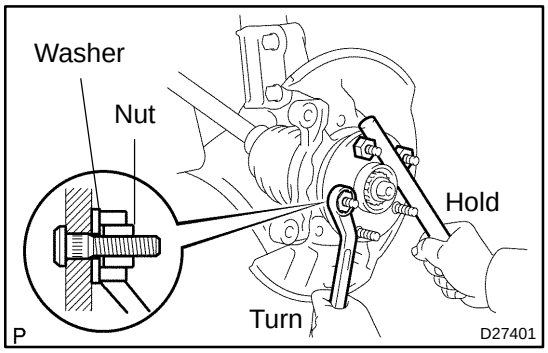

5. **INSTALL FRONT AXLE LH HUB BOLT**

(a) Install a washer and nut to a new LH hub bolt as shown in the illustration.

(b) Using a hammer handle or an equivalent to hold the hub sub–assy LH, install the LH hub bolt by tightening the nut.

6. **INSTALL FRONT DISC**
7. **INSTALL FRONT DISC BRAKE CALIPER ASSY LH (See page 30–56)**
8. **INSTALL FRONT WHEEL**
   Torque: 103 N·m (1,050 kgf·cm, 76 ft·lbf)

PROPELLER W/CENTER BEARING SHAFT ASSY (4WD)

300AZ–01

COMPONENTS

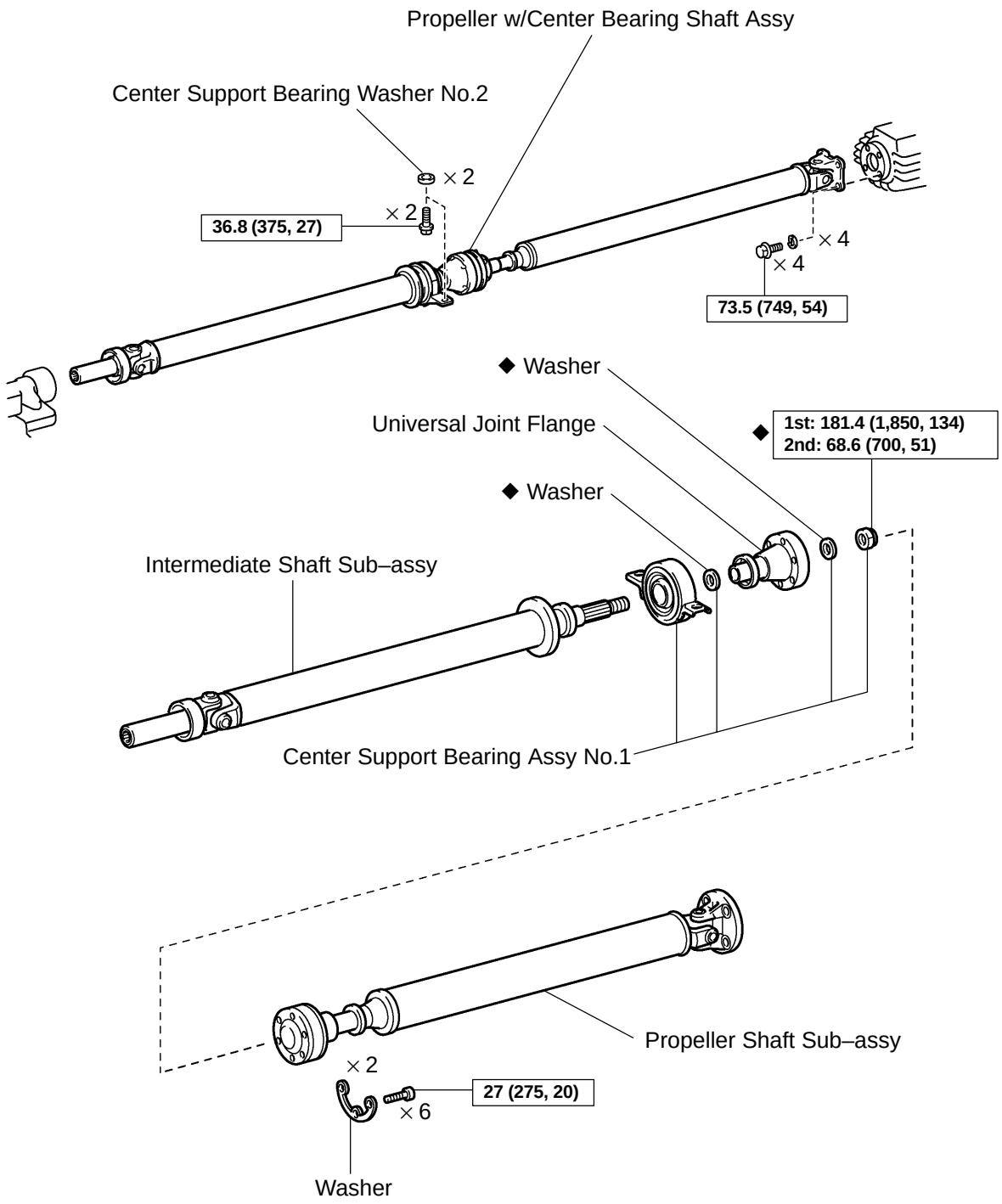

T

N·m (kgf·cm, ft·lbf) : Specified torque

◆ Non–reusable part

D27421

300B0–01

OVERHAUL

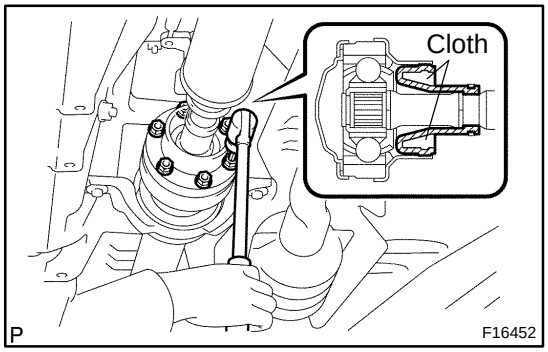

1. REMOVE PROPELLER W/CENTER BEARING SHAFT ASSY

(a) Depress the brake pedal and hold it.

(b) Using a hexagon wrench (6 mm), loosen the cross groove joint set bolts 1/2 turn.

HINT:

Put a piece of cloth inside the cross groove joint cover so that the boot does not touch the inside of the cross groove joint cover.

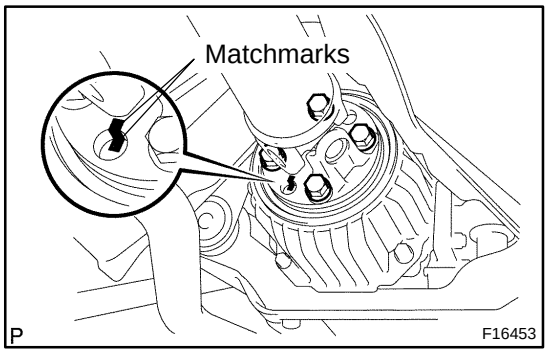

(c) Place matchmarks on the propeller shaft sub–assy and differential carrier assy.

(d) Remove the 4 bolts and washers, separate the propeller shaft sub–assy.

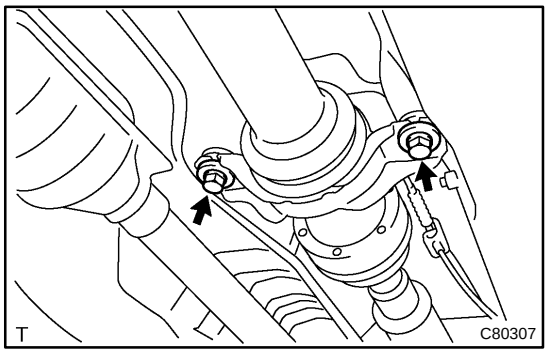

(e) Remove the 2 bolts and 2 bearing washer No.2, separate the propeller w/ center bearing shaft assy.

(f) Pull out the propeller w/ center bearing shaft assy from the transfer.

NOTICE:

- **When removing the propeller shaft, do not apply a large force to the universal joint.**
- **During and after the removal of the propeller shaft, keep the universal joint angle straight (within 15 degrees).**
- **Be careful not to damage the oil seal.**

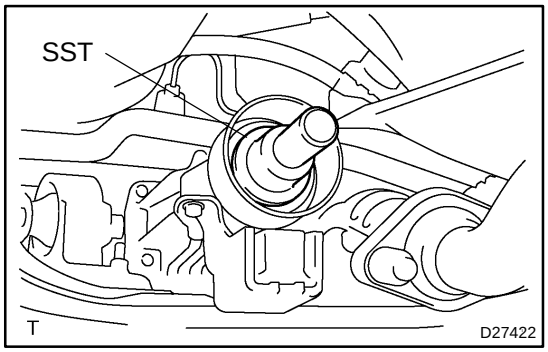

(g) Insert SST into the transfer to prevent oil leakage.
SST 09325–20010

NOTICE:

Be careful not to damage the oil seal.

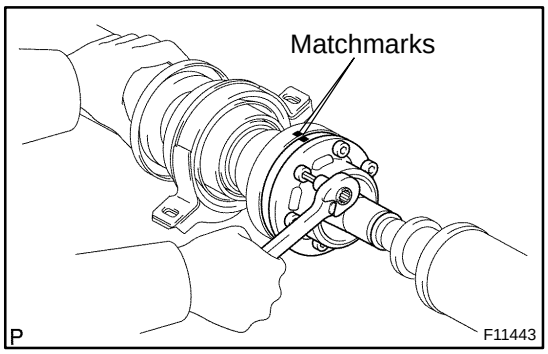

2. REMOVE INTERMEDIATE SHAFT

(a) Place matchmarks on the propeller shaft sub–assy and universal joint flange.

NOTICE:

Do not place the matchmarks with a punch.

(b) Using a hexagon wrench (6 mm), remove the 6 bolts and 2 washers to separate intermediate shaft sub–assy and propeller shaft sub–assy.

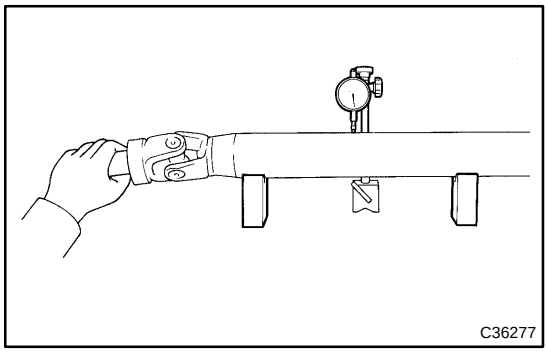

3. INSPECT INTERMEDIATE SHAFT

(a) Using a dial indicator, inspect the intermediate shaft sub–assy.

Maximum runout: 0.4 mm (0.016 in.)

NOTICE:

The dial indicator must be set at a right angle to the center of the propeller shaft.

If the shaft runout is greater than the maximum, replace the propeller w/ center bearing shaft assy.

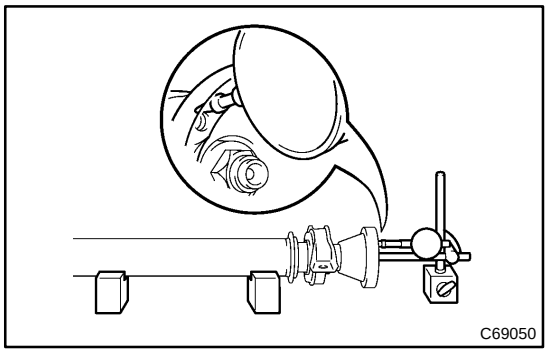

(b) Using a dial indicator, inspect the rear side of universal joint flange runout in the vertical direction.

Maximum runout: 0.1 mm (0.004 in.)

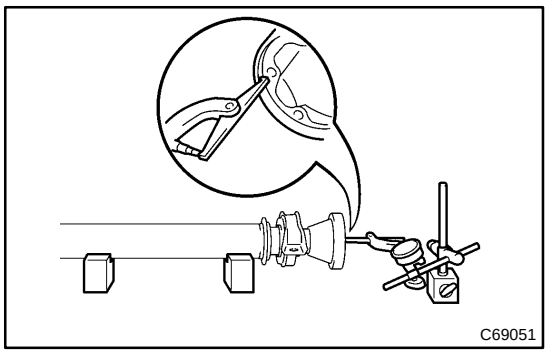

(c) Using a dial indicator, inspect the rear side of universal joint flange runout in the horizontal direction.

Maximum runout: 0.1 mm (0.004 in.)

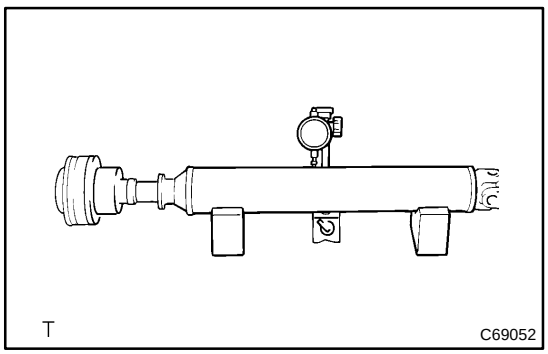

4. INSPECT PROPELLER SHAFT

(a) Using a dial indicator, inspect the propeller shaft sub–assy.

Maximum runout: 0.4 mm (0.016 in.)

NOTICE:

The dial indicator must be set at a right angle to the center of the propeller shaft.

If the shaft runout is greater than the maximum, replace the propeller w/ center bearing shaft assy.

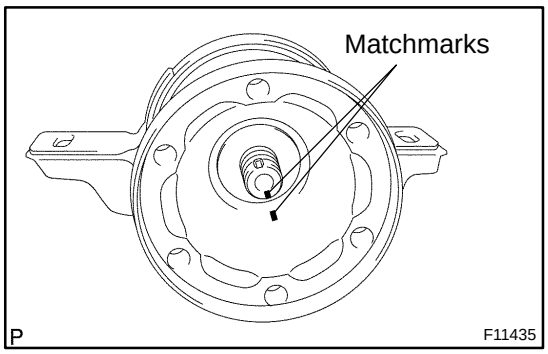

5. REMOVE CENTER SUPPORT BEARING ASSY NO.1

(a) Using a hammer and a chisel, loosen the staked part of the nut.

(b) Using a soft vise to hold the universal joint flange, remove the nut and washer.

NOTICE:

Do not overtighten the vise.

(c) Place matchmarks on the universal joint flange and intermediate shaft sub–assy.

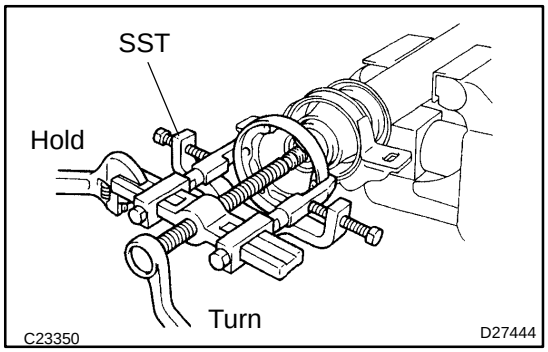

(d) Using SST, remove the universal joint flange.

SST 09950–40011 (09951–04020, 09952–04010, 09953–04030, 09954–04010, 09955–04061, 09957–04010, 09958–04011)

NOTICE:

Be careful not to damage the universal joint flange.

(e) Remove the center support bearing assy No.1 and washer.

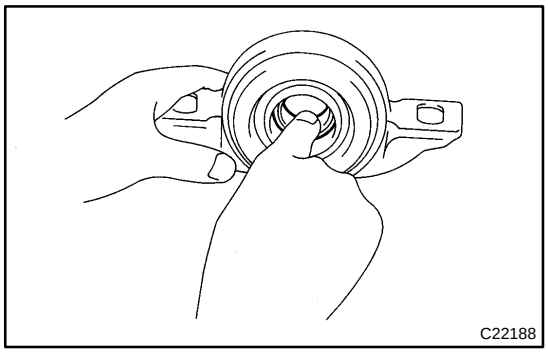

6. INSPECT CENTER SUPPORT BEARING ASSY NO.1

(a) Turn the center support bearing assy No.1 by hand with applying force in the rotation direction. Check the bearing turns smoothly.

(b) Check that the seals and bracket are not cracked or damaged.

If the center support bearing assy No.1 is damaged, worn, or does not turn freely, replace it.

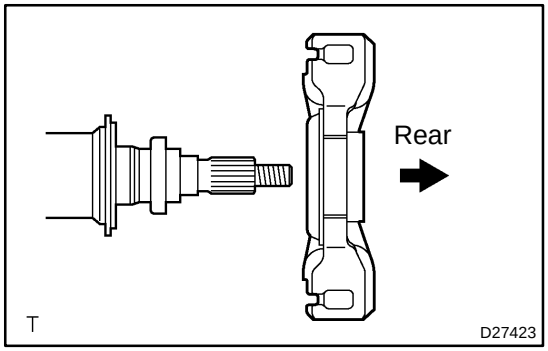

7. INSTALL CENTER SUPPORT BEARING ASSY NO.1

(a) Set the center support bearing No.1 on the intermediate shaft sub–assy as shown in the illustration.

NOTICE:

Be sure to install the bearing in the correct orientation.

(b) Install the new washer to the intermediate shaft sub–assy.

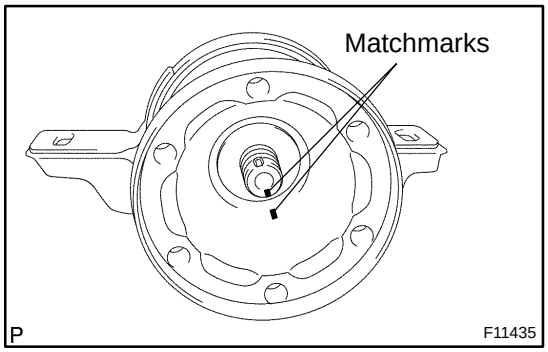

(c) Align the matchmarks on the universal joint flange and intermediate shaft sub–assy, place the flange on the shaft.

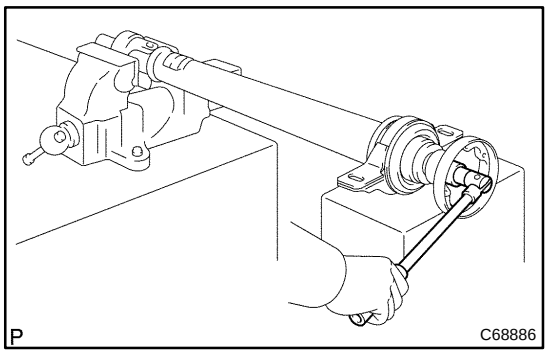

(d) Using a soft vise to hold the universal joint flange, press the bearing into position by tightening down a new nut and washer.
Torque: 181.4 N·m (1,850 kgf·cm, 134 ft·lbf)
(e) Loosen the nut.
(f) Torque the nut again.
Torque: 68.6 N·m (700 kgf·cm, 51 ft·lbf)
(g) Using a chisel and a hammer, stake the nut.

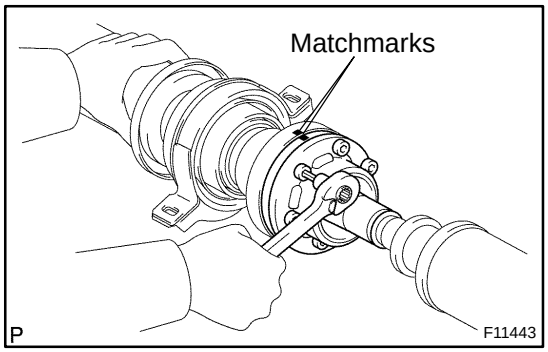

8. INSTALL INTERMEDIATE SHAFT
(a) Align the matchmarks on the intermediate shaft sub–assy and propeller shaft sub–assy.
(b) Using a hexagon wrench (6 mm), tighten the 6 bolts with 2 washers temporarily.

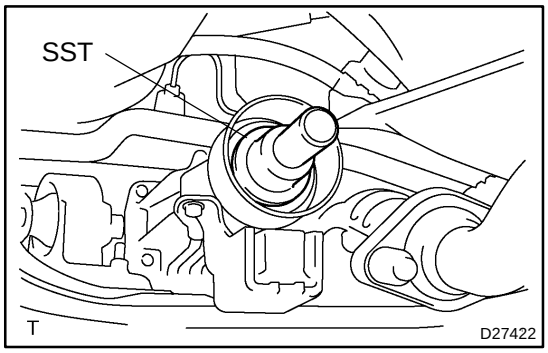

9. TEMPORARY TIGHTEN PROPELLER W/CENTER BEARING SHAFT ASSY
(a) Remove SST from the transfer.
(b) Insert the propeller w/ center bearing shaft assy.
NOTICE:
- **Be careful not to damage the oil seal.**
- **Be careful not to damage the universal joint boot when installing the propeller shaft.**

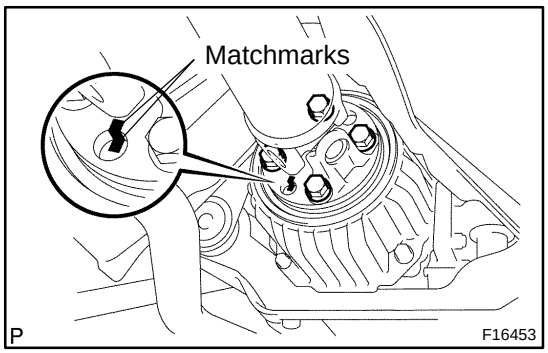

(c) Align matchmarks on the propeller shaft sub–assy and differential carrier assy, install the 4 bolts and washers temporarily.

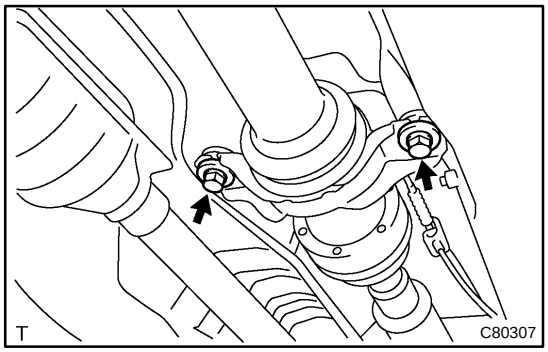

(d) Connect the center support bearing assy No.1 with 2 bolts and 2 center support bearing washer No.2.
NOTICE:
Use the removed washers when installation.

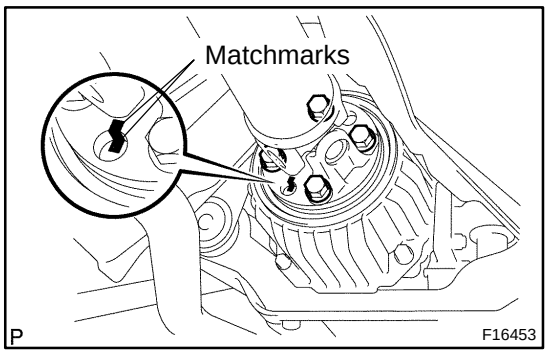

(e) Tighten the 4 bolts.
Torque: 73.5 N·m (749 kgf·cm, 54 ft·lbf)

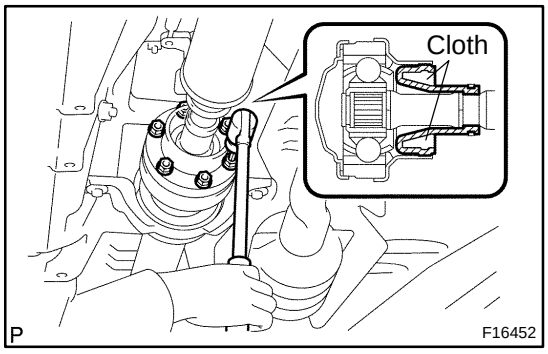

10. FULLY TIGHTEN PROPELLER W/CENTER BEARING SHAFT ASSY

(a) Remove the cloth from the universal joint.
(b) Depress the brake pedal and hold it.
(c) Using a hexagon wrench (6 mm), tighten the 6 bolts.
Torque: 27 N·m (275 kgf·cm, 20 ft·lbf)

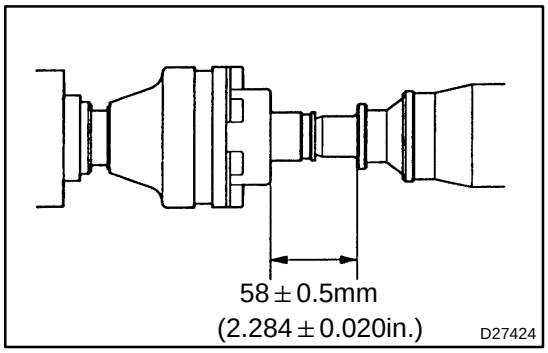

(d) With the vehicle in the unladen condition, adjust the dimension between the rear side of cover and the shaft, as shown in the illustration.

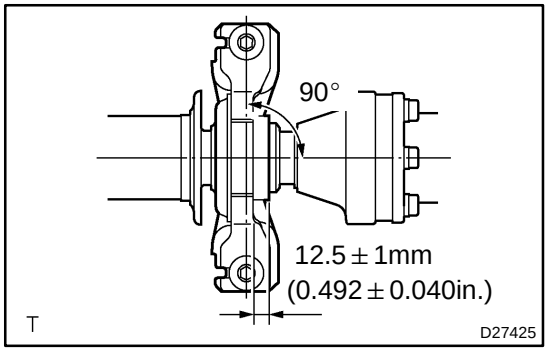

(e) With the same condition, adjust the dimension between the rear side of center bearing housing and the rear side of cushion, as shown in the illustration.
(f) Check that the center line of the bracket is at right angles at the shaft axial direction.
(g) In case of being a strange sound or noise:
Select the center support bearing washer No.2 for adjusting.

NOTICE:

- **Make sure to use the washer of the same thickness on both right and left sides.**
- **Do not use 2 or more washers on a bolt.**

Washer thickness:

Thickness mm (in.)	Thickness mm (in.)
3.6 (0.142)	6.5 (0.256)
4.5 (0.177)	9.0 (0.354)

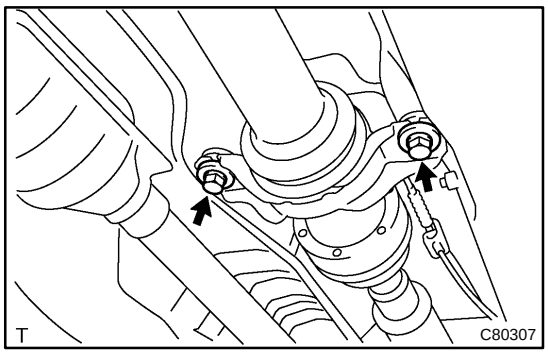

(h) Tighten the 2 bolts.
Torque: 36.8 N·m (374 kgf·cm, 27 ft·lbf)

REAR DRIVE SHAFT (4WD)

COMPONENTS

300B5–01

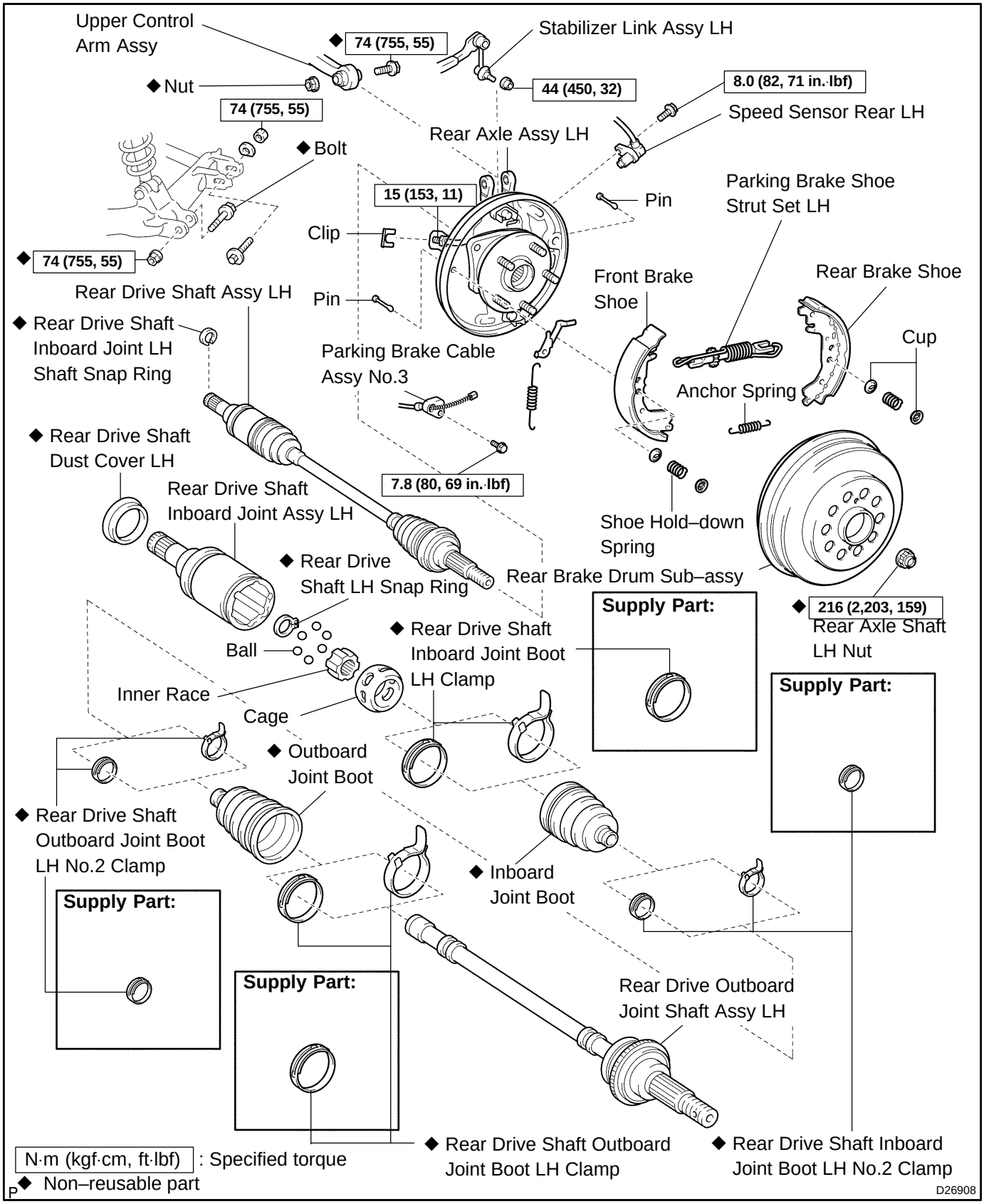

300B6–01

OVERHAUL

1. **REMOVE REAR WHEEL**
2. **SEPARATE REAR STABILIZER LINK ASSY LH (See page 30–66)**
3. **REMOVE REAR AXLE SHAFT LH NUT (See page 30–66)**
   SST 09930–00010
4. **REMOVE REAR BRAKE DRUM SUB–ASSY**
5. **SEPARATE SPEED SENSOR REAR LH (See page 30–66)**
6. **REMOVE PARKING BRAKE SHOE STRUT SET LH (See page 32–41)**
   SST 09703–30010
7. **REMOVE FRONT BRAKE SHOE (See page 32–41)**
   SST 09718–00010
8. **REMOVE REAR BRAKE AUTOMATIC ADJUST LEVER LH (See page 32–41)**
9. **REMOVE REAR BRAKE SHOE (See page 32–41)**
   SST 09718–00010
10. **SEPARATE PARKING BRAKE CABLE ASSY NO.3 (See page 32–41)**
11. **SEPARATE REAR BRAKE TUBE NO.4 (See page 30–66)**
    SST 09023–00100
12. **SEPARATE REAR SUSPENSION ARM ASSY NO.1 LH (See page 30–66)**
13. **SEPARATE UPPER CONTROL ARM ASSY (See page 30–66)**
14. **REMOVE REAR AXLE ASSY LH (See page 30–66)**

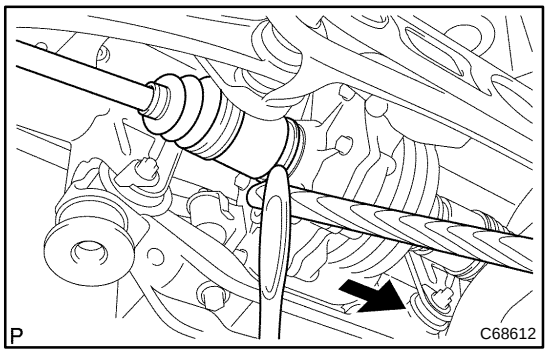

15. REMOVE REAR DRIVE SHAFT ASSY LH

(a) LH:
Using a hammer and a hub nut wrech, remove the rear drive shaft assy LH.

NOTICE:
Be careful not to damage the dust cover, boot and oil seal.

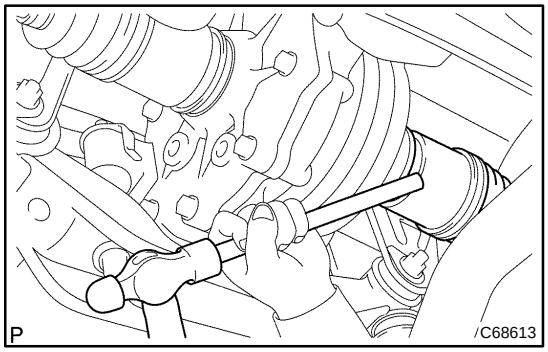

(b) RH:
Using a brass bar and a hammer, remove the rear drive shaft assy RH.

NOTICE:
Be careful not to damage the dust cover, boot and oil seal.

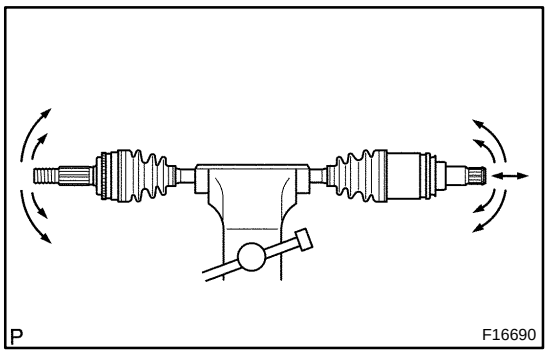

16. INSPECT REAR DRIVE SHAFT ASSY LH

(a) Check that there is no play in the outboard joint shaft.

(b) Check that the inboard joint shaft slides smoothly in the thrust direction.

(c) Check that there is no remarkable play in the radial direction of the inboard joint shaft.

(d) Check for damage to boots.

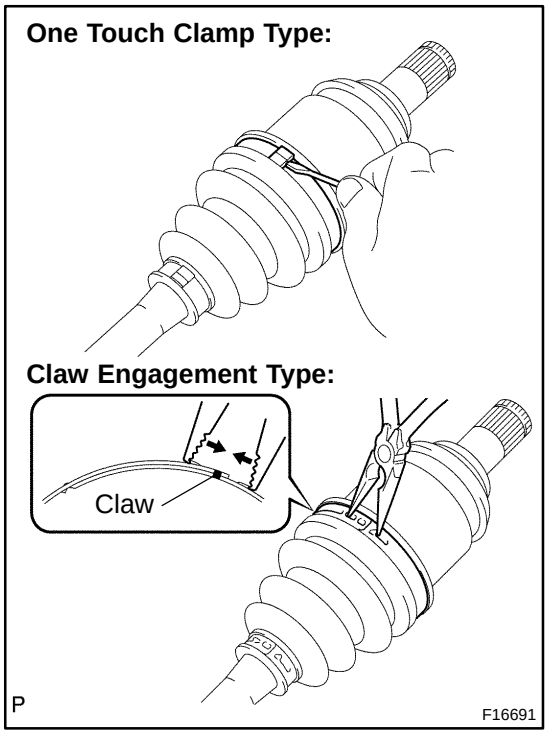

17. REMOVE REAR DRIVE SHAFT INBOARD JOINT BOOT LH CLAMP

(a) One Touch Clamp Type:
Using a screwdriver, disclamp the inboard joint boot LH clamp.

(b) Claw Engagement Type:
Using a needle nose pliers, remove the inboard joint boot LH clamp as shown in the illustration.

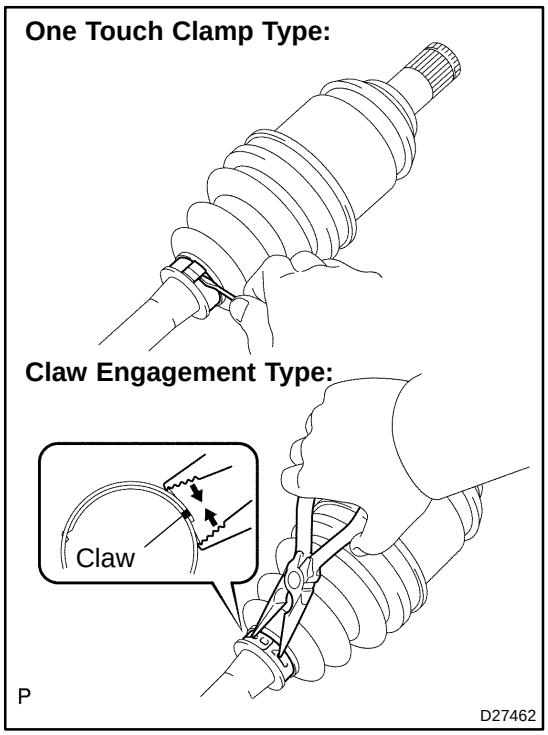

18. REMOVE REAR DRIVE SHAFT INBOARD JOINT BOOT LH NO.2 CLAMP

(a) One Touch Clamp Type:
Using a screwdriver, disclamp the inboard joint boot LH No.2 clamp.

(b) Claw Engagement Type:
Using a needle nose pliers, remove the inboard joint boot LH No.2 clamp as shown in the illustration.

19. SEPARATE INBOARD JOINT BOOT

(a) Separate the inboard joint boot from the inboard joint assy LH.

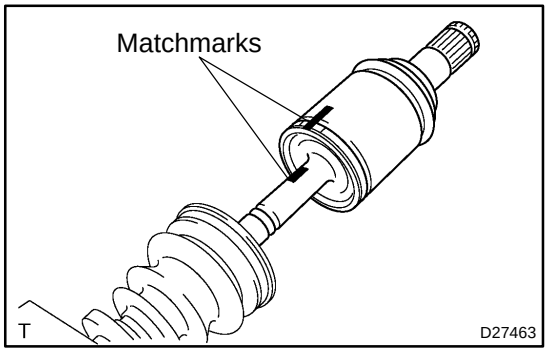

20. REMOVE REAR DRIVE SHAFT INBOARD JOINT ASSY LH

(a) Place matchmarks on the inboard joint assy LH and outboard joint shaft assy LH.

NOTICE:

Do not punch the marks.

(b) Pull out the inboard joint assy LH.

NOTICE:

Be careful not to drop the balls.

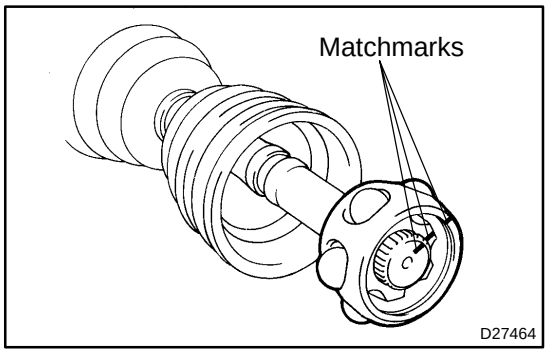

(c) Place matchmarks on the outboard joint shaft assy LH, inner race and cage.

NOTICE:

Do not punch the marks.

(d) Remove the 6 balls.

(e) Slide the cage toward outboard joint.

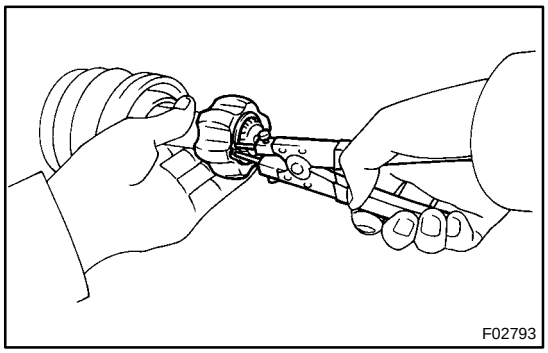

(f) Using a snap ring expander, remove the rear drive shaft LH snap ring.

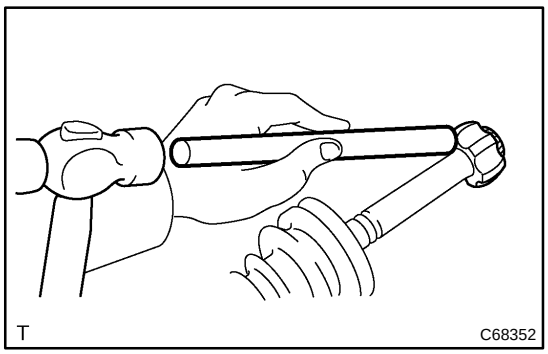

(g) Using a brass bar and a hammer, remove the inner race.

NOTICE:

Be careful not to damage the inner race.

(h) Remove the cage.

(i) Remove the inboard joint boot, inboard joint boot LH clamp and inboard joint boot LH No.2 clamp.

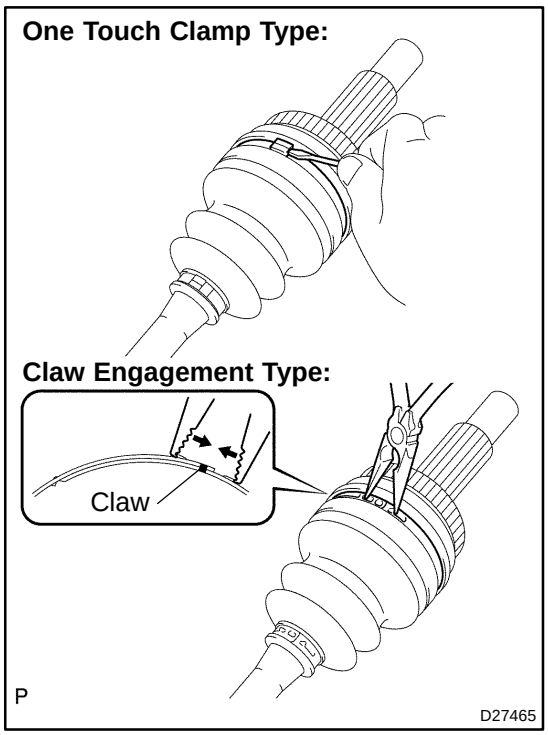

21. REMOVE REAR DRIVE SHAFT OUTBOARD JOINT BOOT LH CLAMP

(a) One Touch Clamp Type:
Using a screwdriver, disclamp the outboard joint boot LH clamp.

(b) Claw Engagement Type:
Using a needle nose pliers, remove the outboard joint boot LH clamp as shown in the illustration.

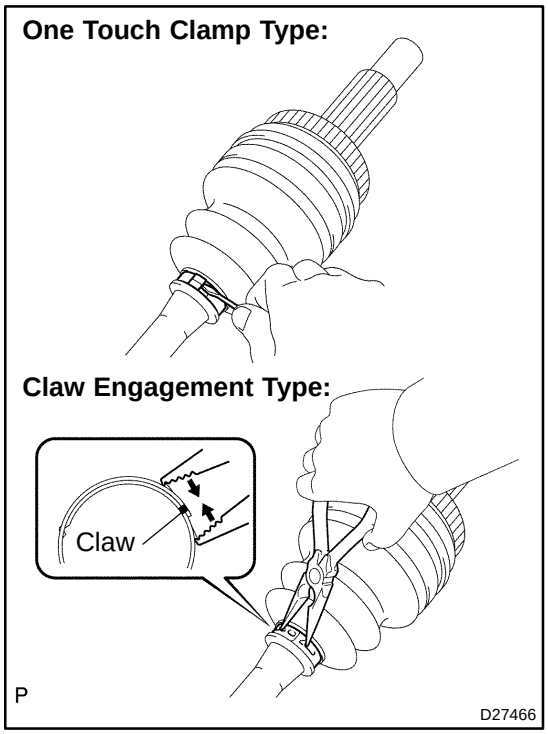

22. REMOVE REAR DRIVE SHAFT OUTBOARD JOINT BOOT LH NO.2 CLAMP

(a) One Touch Clamp Type:
Using a screwdriver, disclamp the outboard joint boot LH No.2 clamp.

(b) Claw Engagement Type:
Using a needle nose pliers, remove the outboard joint boot LH No.2 clamp as shown in the illustration.

23. REMOVE OUTBOARD JOINT BOOT

(a) Remove the outboard joint boot from the outboard joint shaft assy LH.

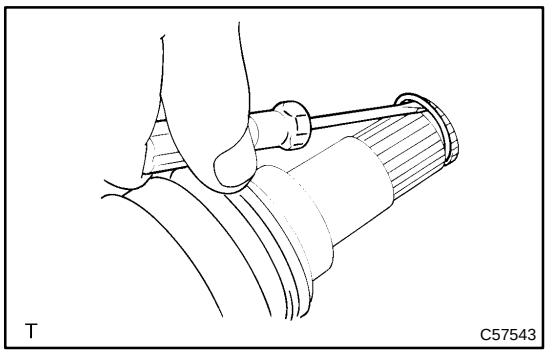

24. REMOVE REAR DRIVE SHAFT INBOARD JOINT LH SHAFT SNAP RING

(a) Using a screwdriver, remove the LH shaft snap ring.

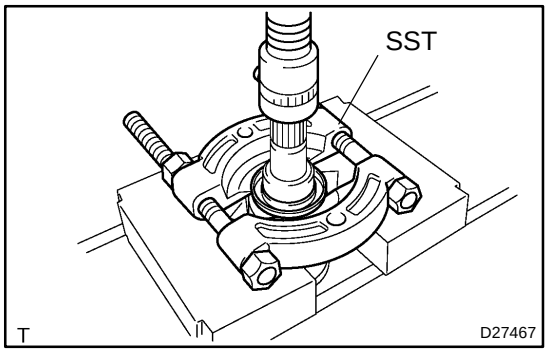

25. REMOVE REAR DRIVE SHAFT DUST COVER LH

(a) Using SST and a press, remove the dust cover LH.
SST 09950–00020

NOTICE:

Be careful not to drop the inboard joint.

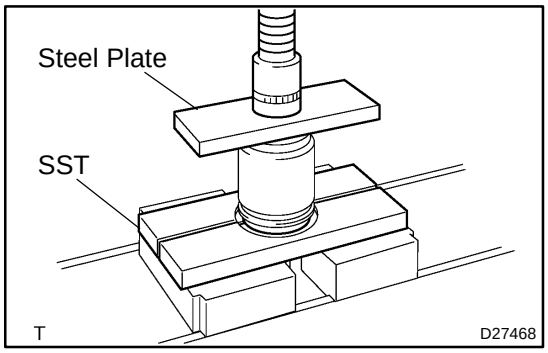

26. INSTALL REAR DRIVE SHAFT DUST COVER LH

(a) Using SST, a steel plate and a press, install a new dust cover LH.
SST 09527–21011

NOTICE:

Be careful not to damage the dust cover.

27. INSTALL REAR DRIVE SHAFT INBOARD JOINT LH SHAFT SNAP RING

(a) Install a new LH shaft snap ring to the inboard joint assy LH.

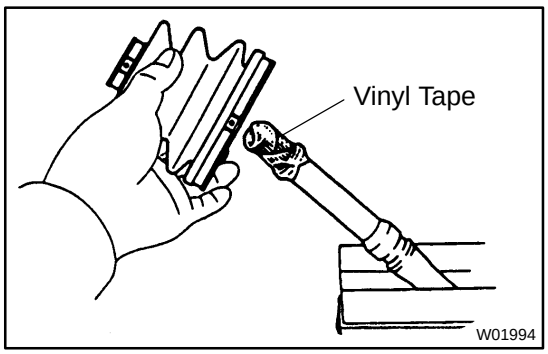

28. INSTALL OUTBOARD JOINT BOOT

HINT:

Before installing the boot, wrap the spline of the drive shaft with vinyl tape to prevent the boot from being damaged.

(a) Through a new outboard joint boot and 2 new clamps to the drive shaft.

(b) Pack the outboard joint shaft and boot with grease in the boot kit.
Grease capacity: (Color = Yellow)
71 – 81 g (2.5 – 2.9 oz.)

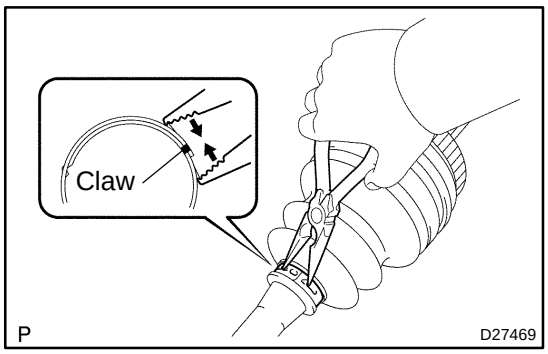

29. INSTALL REAR DRIVE SHAFT OUTBOARD JOINT BOOT LH NO.2 CLAMP

(a) Holding the clamp near the closing claws, using needle nose pliers, position the holes in the clamp's free end over the closing claws.

(b) Secure clamp by drawing the closing claws together.

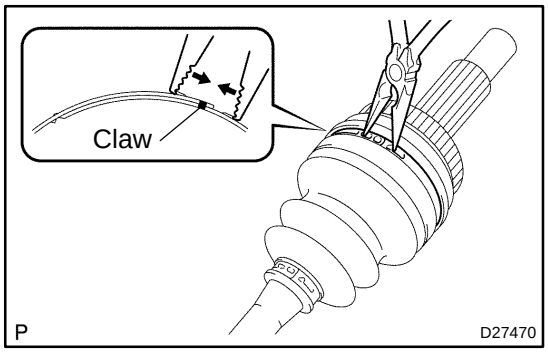

30. INSTALL REAR DRIVE SHAFT OUTBOARD JOINT BOOT LH CLAMP

(a) Holding the clamp near the closing claws, using needle nose pliers, position the holes in the clamp's free end over the closing claws.

(b) Secure clamp by drawing the closing claws together.

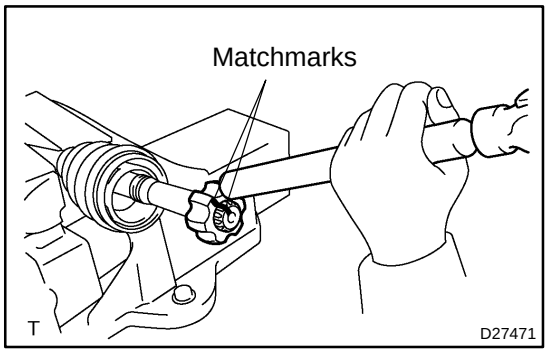

31. INSTALL REAR DRIVE SHAFT INBOARD JOINT ASSY LH

(a) Through a new inboard joint boot, 2 new inboard joint clamps and cage.

(b) Align the mathmarks, using a brass bar and a hammer, install the inner race.

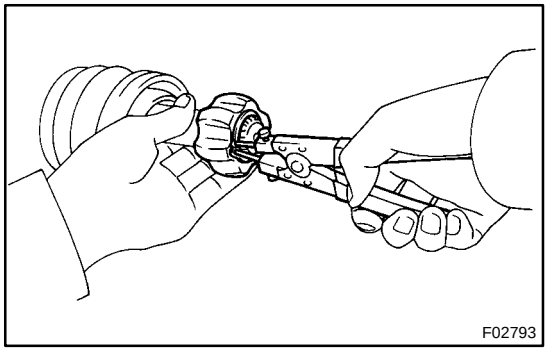

(c) Using a snap ring expander, install a new rear drive shaft LH snap ring.

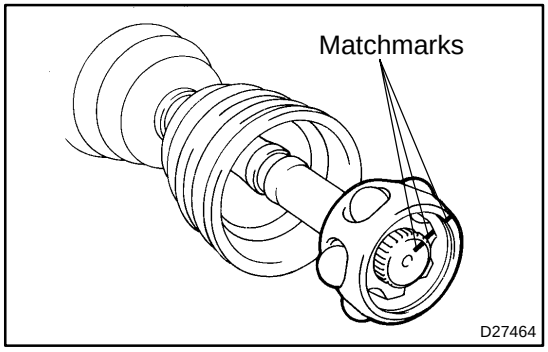

(d) Align the matchmarks, install the cage to the inner race.

(e) install the 6 balls with grease to the inner race.

(f) Pack the inboard joint shaft and boot with grease in the boot kit.

Grease capacity: (Color = Yellow)
132 – 142 g (4.7 – 5.0 oz.)

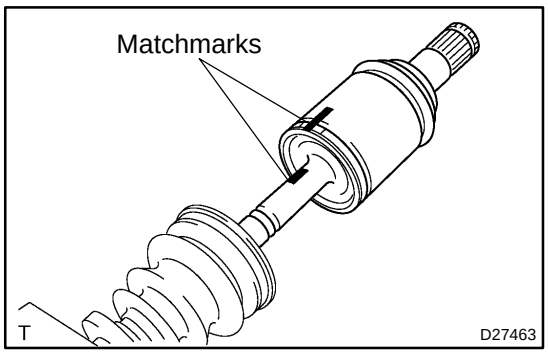

(g) Align the matchmarks, install the inboard joint assy LH to the outboard joint shaft assy LH.

32. INSTALL INBOARD JOINT BOOT

(a) Install the inboard joint boot to the inboard joint assy LH and outboard joint shaft assy LH.

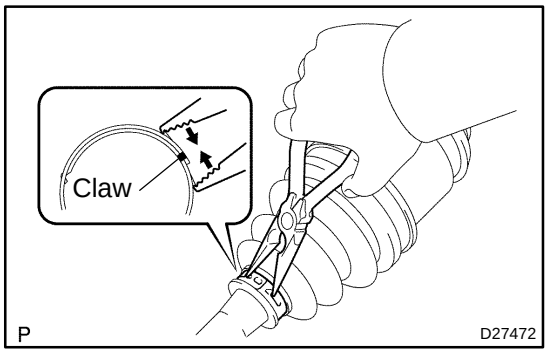

33. INSTALL REAR DRIVE SHAFT INBOARD JOINT BOOT LH NO.2 CLAMP

(a) Holding the clamp near the closing claws, using needle nose pliers, position the holes in the clamps free end over the closing claws.

(b) Secure clamp by drawing the closing claws together.

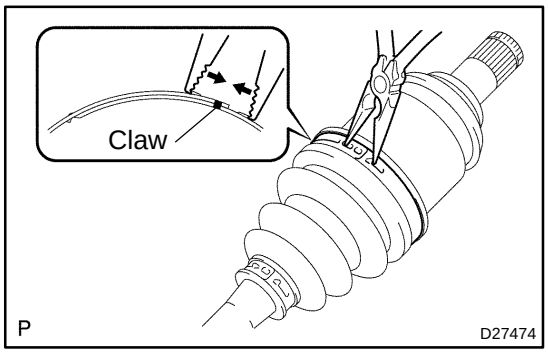

34. INSTALL REAR DRIVE SHAFT INBOARD JOINT BOOT LH CLAMP

(a) Holding the clamp near the closing claws, using needle nose pliers, position the holes in the clamps free end over the closing claws.

(b) Secure clamp by drawing the closing claws together.

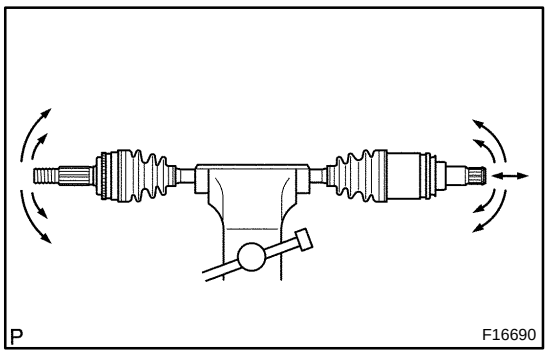

35. INSPECT REAR DRIVE SHAFT ASSY LH

(a) Check to see that there is no remarkable play in the outboard joint.

(b) Check to see that the inboard joint slides smoothly in the thrust direction.

(c) Check to see that there is no remarkable play in the radial direction of the inboard joint.

(d) Check the boots for damage.

NOTICE:

Move the drive shaft assy keeping it level.

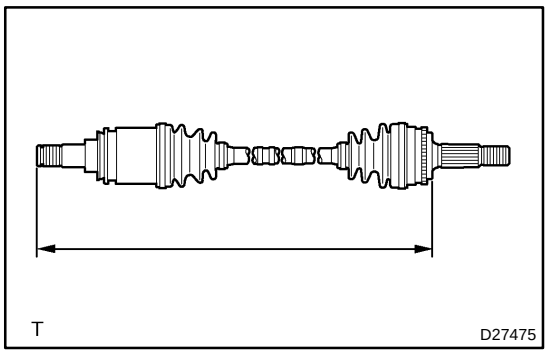

(e) Make sure that the 2 boots are on the shaft groove.
(f) Make sure that the 2 boots are not stretched or contracted when the drive shaft is at standard length.
Drive shaft standard length:
693.3 ± 5.0 mm (27.295 ± 0.197 in.)

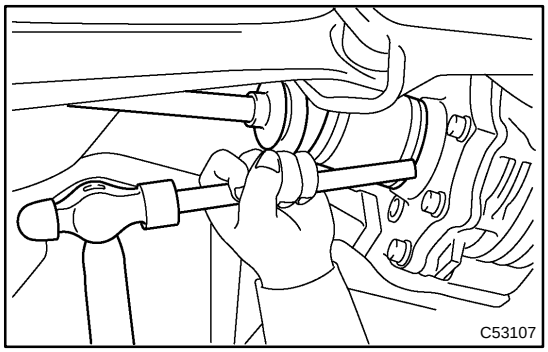

36. INSTALL REAR DRIVE SHAFT ASSY LH
(a) Align the shaft splines, install the rear drive shaft assy LH with brass bar and hammer.

NOTICE:
- **Set the snap ring with opening side facing downward.**
- **Be careful not to damage the dust cover, boot and oil seal.**

HINT:
Whether the inboard joint assy LH is in contact with the pinion shaft or not can be known from the sound or feeling when driving it.

37. TEMPORARY TIGHTEN UPPER CONTROL ARM ASSY (See page 30–66)
38. INSTALL REAR AXLE ASSY LH (See page 30–66)
39. TEMPORARY TIGHTEN REAR SUSPENSION ARM ASSY NO.1 LH (See page 30–66)
40. INSTALL REAR BRAKE TUBE NO.4 (See page 30–66)
SST 09023–00100
41. CONNECT PARKING BRAKE CABLE ASSY NO.3 (See page 32–41)
42. APPLICATION HIGH TEMPERATURE GREASE (See page 32–41)
43. INSTALL REAR BRAKE SHOE (See page 32–41)
SST 09718–00010
44. INSTALL REAR BRAKE AUTOMATIC ADJUST LEVER LH (See page 32–41)
45. INSTALL FRONT BRAKE SHOE (See page 32–41)
SST 09718–00010
46. INSTALL PARKING BRAKE SHOE STRUT SET LH (See page 32–41)
47. INSTALL SPEED SENSOR REAR LH (See page 30–66)
48. CHECK REAR DRUM BRAKE INSTALLATION (See page 32–41)
49. INSTALL REAR BRAKE DRUM SUB–ASSY
50. INSTALL REAR AXLE SHAFT LH NUT (See page 30–66)
51. REMOVE REAR BRAKE DRUM SUB–ASSY
52. INSPECT BEARING BACKLASH (See page 30–66)
53. INSPECT AXLE HUB DEVIATION (See page 30–66)
54. INSTALL REAR BRAKE DRUM SUB–ASSY
55. ADJUST REAR DRUM BRAKE SHOE CLEARANCE (See page 32–41)
56. INSTALL REAR AXLE SHAFT LH NUT (See page 30–66)
57. INSTALL REAR STABILIZER LINK ASSY LH (See page 30–66)
58. BLEED BRAKE LINE (See page 32–6)
59. INSTALL REAR WHEEL
Torque: 103 N·m (1,050 kgf·cm 76 ft·lbf)
60. STABILIZE SUSPENSION
61. FULLY TIGHTEN UPPER CONTROL ARM ASSY (See page 27–32)

62. FULLY TIGHTEN REAR SUSPENSION ARM ASSY NO.1 LH (See page 27–27)
63. CHECK FLUID LEVEL IN RESERVOIR
64. INSPECT AND ADJUST REAR WHEEL ALIGNMENT (See page 27–7)
65. CHECK ABS SPEED SENSOR SIGNAL (See page 05–316)

FRONT DRIVE SHAFT (2ZZ–GE)

300B3–01

COMPONENTS

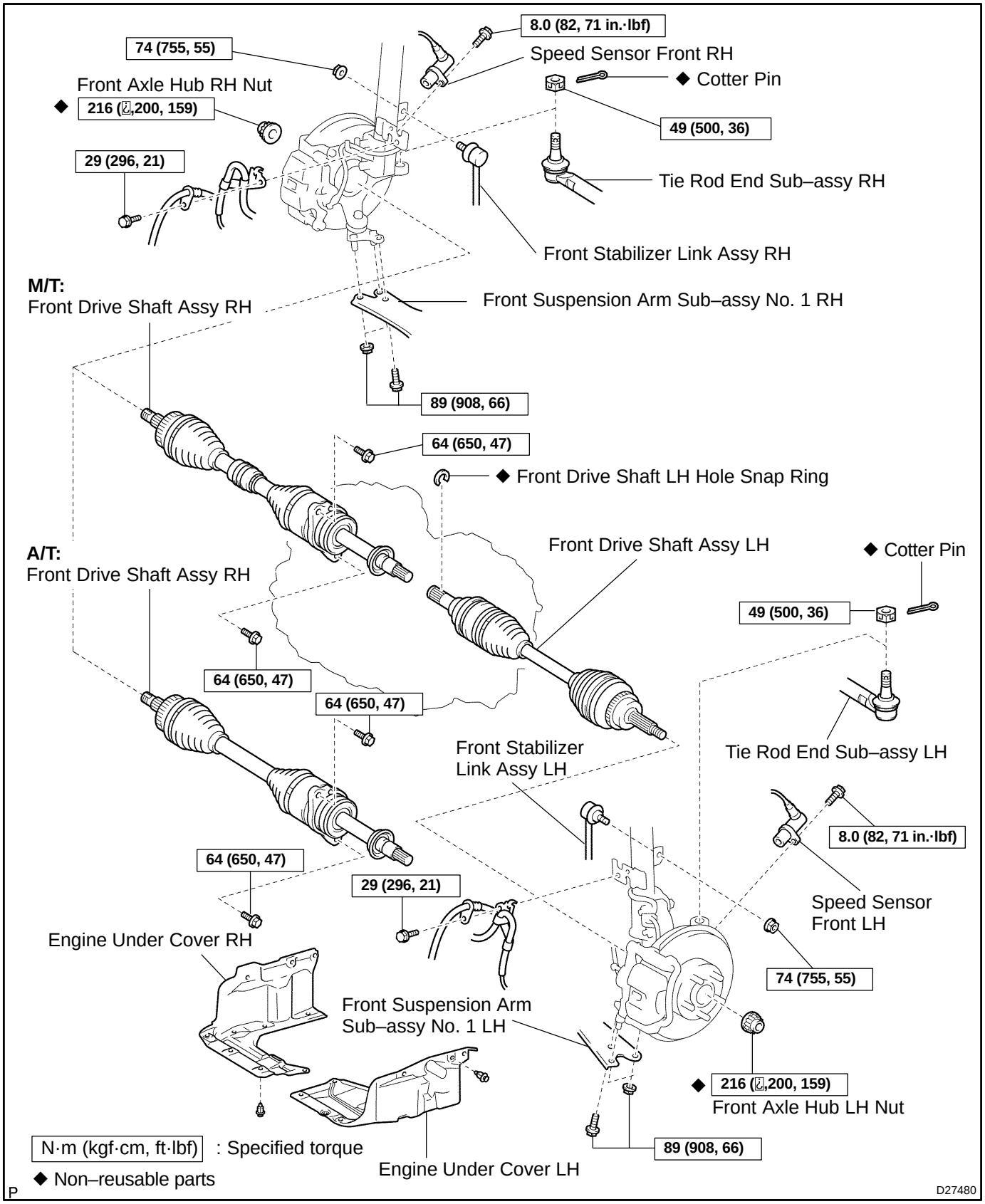

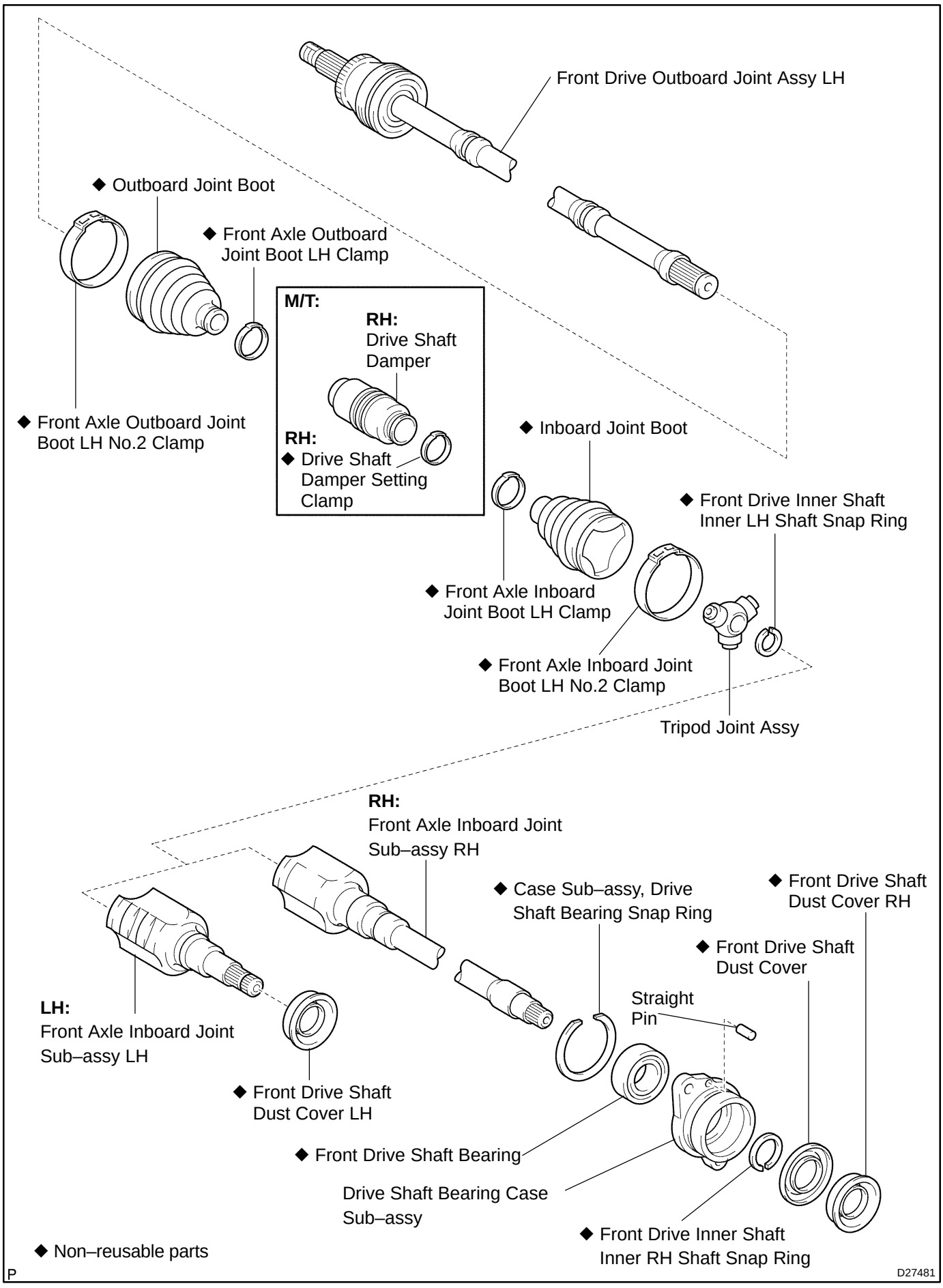
Front Drive Outboard Joint Assy LH
◆ Outboard Joint Boot
◆ Front Axle Outboard Joint Boot LH Clamp
M/T:
RH:
Drive Shaft Damper
RH:
◆ Drive Shaft Damper Setting Clamp
◆ Front Axle Outboard Joint Boot LH No.2 Clamp
◆ Inboard Joint Boot
◆ Front Drive Inner Shaft Inner LH Shaft Snap Ring
◆ Front Axle Inboard Joint Boot LH Clamp
◆ Front Axle Inboard Joint Boot LH No.2 Clamp
Tripod Joint Assy
RH:
Front Axle Inboard Joint Sub–assy RH
◆ Case Sub–assy, Drive Shaft Bearing Snap Ring
◆ Front Drive Shaft Dust Cover RH
◆ Front Drive Shaft Dust Cover
Straight Pin
LH:
Front Axle Inboard Joint Sub–assy LH
◆ Front Drive Shaft Dust Cover LH
◆ Front Drive Shaft Bearing
Drive Shaft Bearing Case Sub–assy
◆ Front Drive Inner Shaft Inner RH Shaft Snap Ring
◆ Non–reusable parts
P
D27481

300B4–01

OVERHAUL

1. DRAIN MANUAL TRANSAXLE OIL (M/T TRANSAXLE)
Torque: 39.2 N·m (400 kgf·cm, 29 ft·lbf)

2. DRAIN AUTOMATIC TRANSAXLE FLUID (A/T TRANSAXLE)
Torque: 49 N·m (500 kgf·cm, 36 ft·lbf)

3. REMOVE FRONT WHEEL

4. REMOVE ENGINE UNDER COVER LH

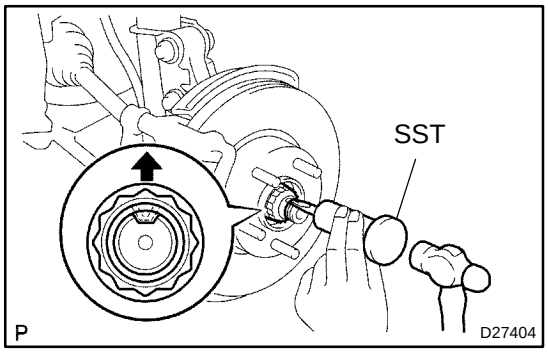

5. REMOVE FRONT AXLE HUB LH NUT

(a) Using SST and a hammer, unstake the staked part of the hub LH nut.
SST 09930–00010

(b) While applying the brakes, remove the hub LH nut.

NOTICE:

Loosen the staked part of the nut completely, otherwise the screw of the drive shaft may be damaged.

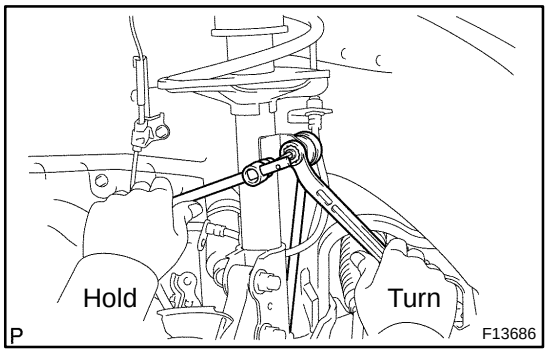

6. SEPARATE FRONT STABILIZER LINK ASSY LH

(a) Remove the nut and separate the front stabilizer link assy LH from the shock absorber assy front LH.

HINT:

If the ball joint turns together with the nut, use a hexagon wrench (6 mm) to hold the stud.

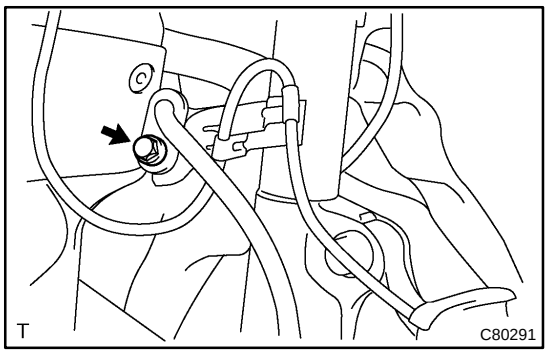

7. SEPARATE SPEED SENSOR FRONT LH

(a) Remove the bolt, separate the speed sensor front LH and flexible hose from the shock absorber assy front LH.

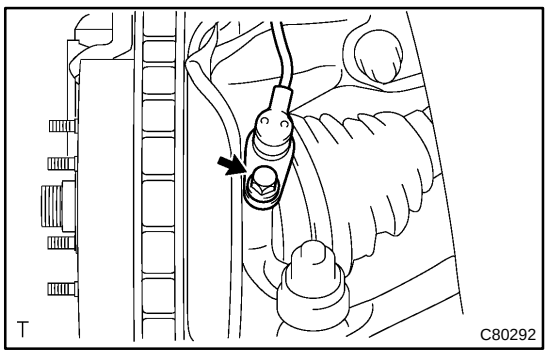

(b) Remove the bolt, separate the speed sensor front LH from the steering knuckle.

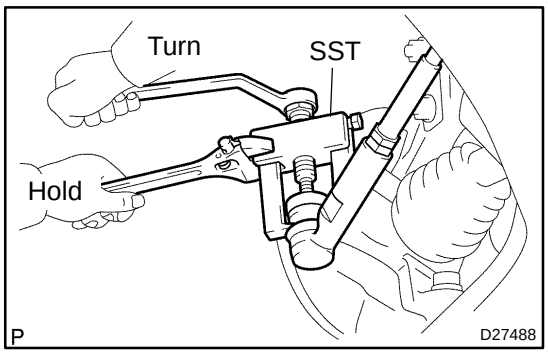

8. SEPARATE TIE ROD END SUB–ASSY LH

(a) Remove the cotter pin and nut.

(b) Using SST, separate the tie rod end sub–assy LH from the steering knuckle.
SST 09628–62011

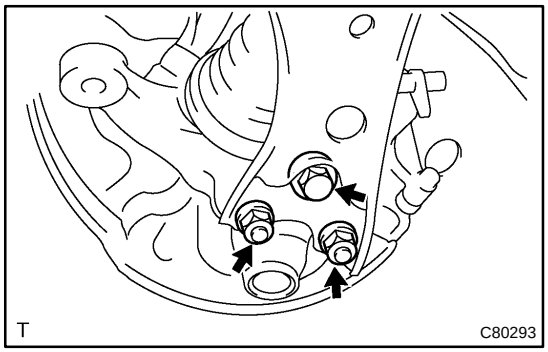

9. SEPARATE FRONT SUSPENSION ARM SUB–ASSY LOWER NO.1 LH

(a) Remove the bolt and 2 nuts, separate the front suspension arm sub–assy lower No.1 LH from the lower ball joint.

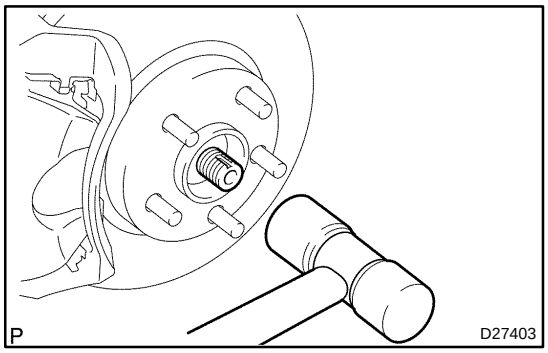

10. SEPARATE FRONT AXLE ASSY LH

(a) Using a plastic hammer, separate the front drive shaft assy LH from the front axle assy LH.

NOTICE:

Be careful not to damage the boot and speed sensor rotor.

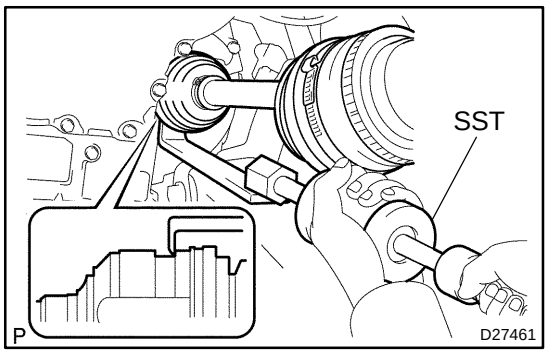

11. REMOVE FRONT DRIVE SHAFT ASSY LH

(a) Using SST, remove the front drive shaft assy LH.
SST 09520–01010, 09520–24010 (09520–32040)

NOTICE:

Be careful not to damage the dust cover, boot and oil seal.

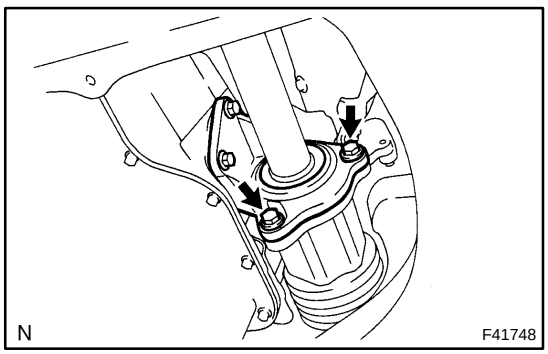

12. REMOVE FRONT DRIVE SHAFT ASSY RH

(a) Remove the 2 bearing lock bolts, pull out the front drive shaft assy RH.

NOTICE:

Be careful not to damage the dust cover, boot and oil seal.

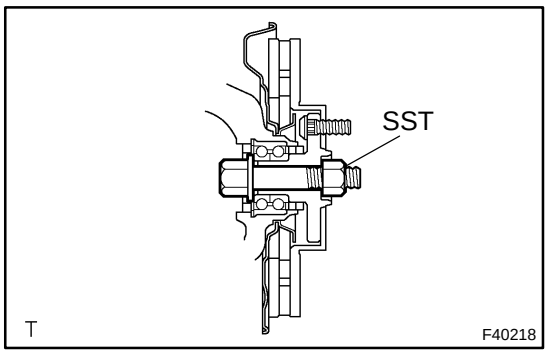

13. FIX FRONT AXLE ASSY LH

NOTICE:

The hub bearing could be damaged if it is subjected to the vehicle weight, such as when moving the vehicle with the drive shaft removed.

Therefore, make sure to support the hub bearing with SST when the vehicle weight is applied.

SST 09608–16042 (09608–02021, 09608–02041)

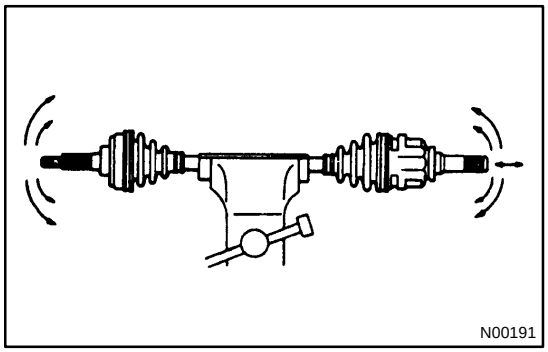

14. INSPECT FRONT DRIVE SHAFT ASSY LH

(a) Check that there is no remarkable play in the outboard joint.

(b) Check that the inboard joint slides smoothly in the thrust direction.

(c) Check that there is no remarkable play in the radial direction of the inboard joint.

(d) Check the boots for damage.

NOTICE:

Keep the drive shaft assy level during inspection.

15. REMOVE FRONT AXLE INBOARD JOINT BOOT LH NO.2 CLAMP

(a) Using a side cutter, cut the inboard joint boot LH No.2 clamp, then remove it.

16. REMOVE FRONT AXLE INBOARD JOINT BOOT LH CLAMP

(a) Using a side cutter, cut the inboard joint boot LH clamp, then remove it.

17. SEPARATE INBOARD JOINT BOOT

(a) Separate the inboard joint boot from the inboard joint sub–assy LH.

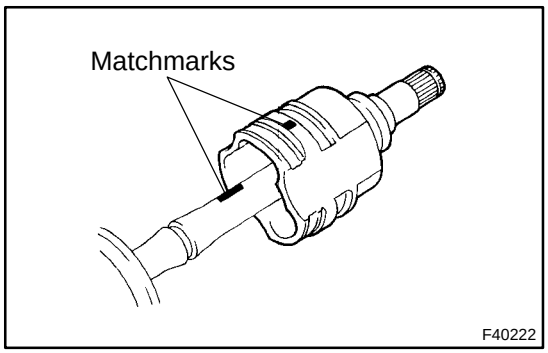

18. REMOVE FRONT DRIVE INBOARD JOINT ASSY LH

(a) Remove the old grease from the inboard joint sub–assy LH.

(b) Place matchmarks on the inboard joint sub–assy LH and outboard joint shaft assy.

NOTICE:

Do not punch the marks.

(c) Remove the inboard joint sub–assy LH from the outboard joint shaft assy.

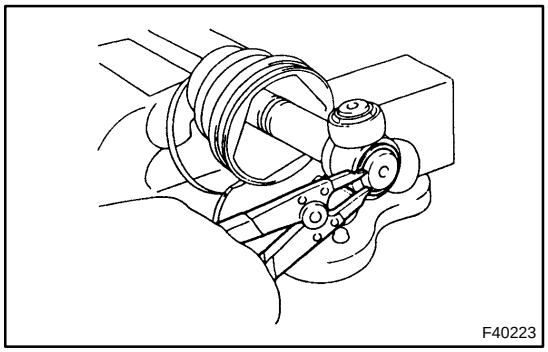

(d) Using a snap ring expander, remove the inner LH shaft snap ring.

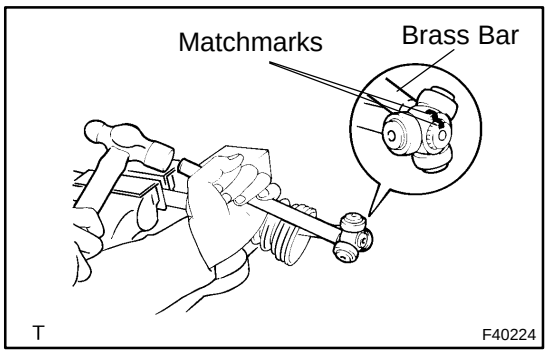

(e) Place matchmarks on the outboard joint shaft assy and tripod joint assy.

NOTICE:

Do not punch the marks.

(f) Using a brass bar and a hammer, remove the tripod joint assy from the outboard joint shaft assy.

NOTICE:

Do not tap the roller.

(g) Remove the inboard joint boot LH No.2 clamp, inboard joint boot and inboard joint boot LH clamp.

19. REMOVE DRIVE SHAFT DAMPER (M/T TRANSAXLE)

HINT:

Perform the procedure below only when disassembling the RH side.

(a) Using a side cutter, cut the drive shaft damper setting clamp, then remove it.

(b) Remove the drive shaft damper.

20. REMOVE FRONT AXLE OUTBOARD JOINT BOOT LH NO.2 CLAMP

(a) Using a side cutter, cut the outboard joint boot LH No.2 clamp, then remove it.

21. REMOVE FRONT AXLE OUTBOARD JOINT BOOT LH CLAMP

(a) Using a side cutter, cut the outboard joint boot LH clamp, then remove it.

22. REMOVE OUTBOARD JOINT BOOT

(a) Remove the outboard joint boot from the outboard joint shaft.

(b) Remove the old grease from the outboard joint.

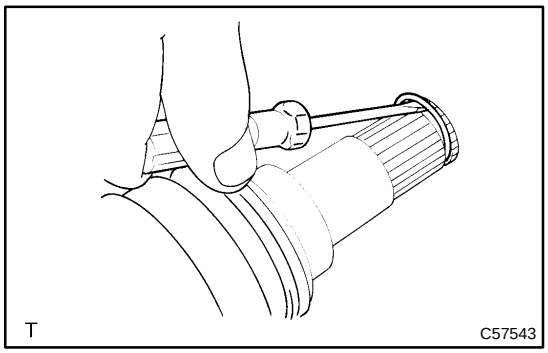

23. REMOVE FRONT DRIVE SHAFT LH HOLE SNAP RING

(a) Using a screwdriver, remove the LH hole snap ring.

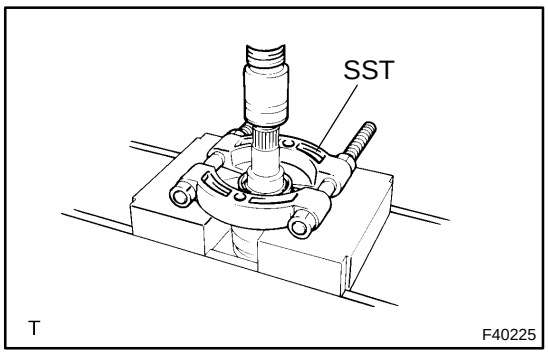

24. REMOVE FRONT DRIVE SHAFT DUST COVER LH

(a) Using SST and a press, remove the dust cover LH.

SST 09950–00020

NOTICE:

Be careful not to drop the inboard joint.

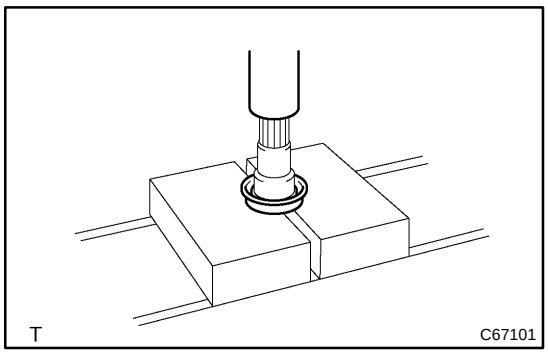

25. REMOVE FRONT DRIVE SHAFT DUST COVER RH

(a) Using a press, remove the dust cover RH.

NOTICE:

Be careful not to drop the inboard joint.

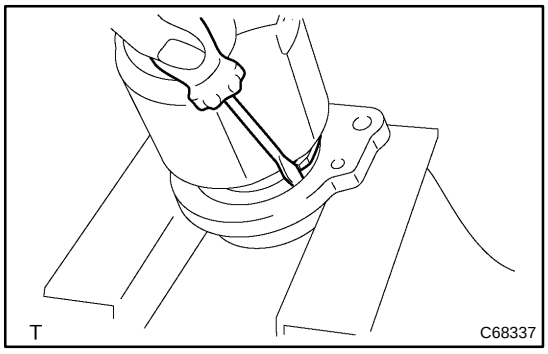

26. REMOVE CASE SUB ASSY, DRIVE SHAFT BEARING SNAP RING (RH DRIVE SHAFT)

(a) Using a screwdriver, remove the drive shaft bearing snap ring.

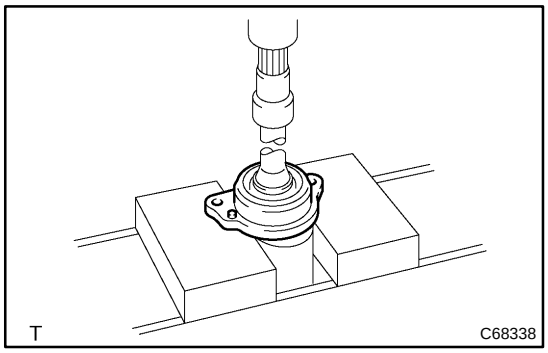

27. REMOVE DRIVE SHAFT BEARING CASE SUB ASSY (RH DRIVE SHAFT)

(a) Using a press, remove the bearing case sub–assy.

NOTICE:

Be careful not to drop the inboard joint.

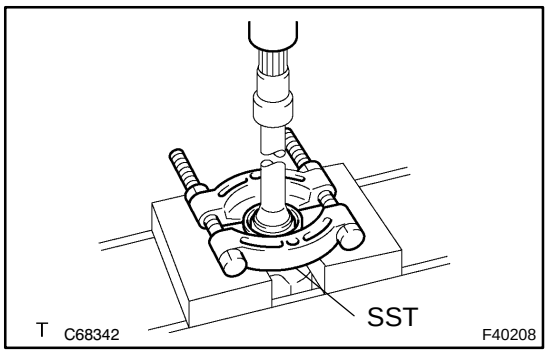

28. REMOVE FRONT DRIVE SHAFT DUST COVER (RH DRIVE SHAFT)

(a) Using SST and a press, remove the dust cover.

SST 09950–00020

NOTICE:

Be careful not to drop the inboard joint.

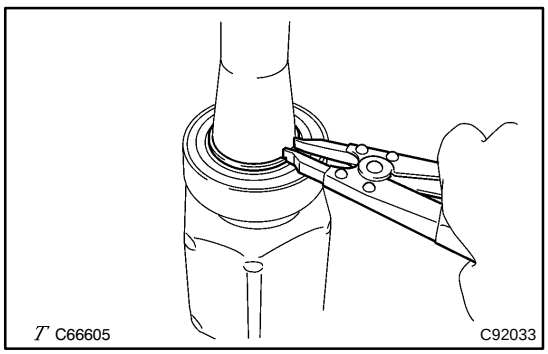

29. REMOVE FRONT DRIVE SHAFT BEARING (RH DRIVE SHAFT)

(a) Using a snap ring expander, remove the inner RH shaft snap ring.

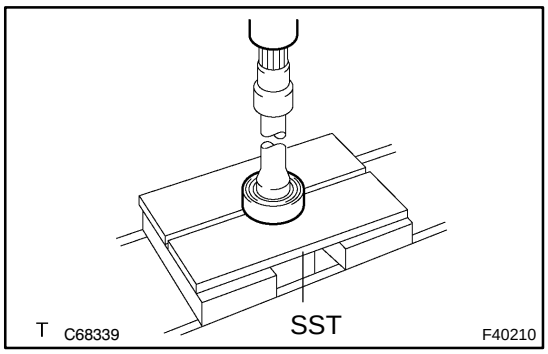

(b) Using SST and a press, remove the drive shaft bearing.
SST 09527–21011

NOTICE:

Be careful not to drop the inboard joint.

(c) Remove the drive shaft bearing snap ring.

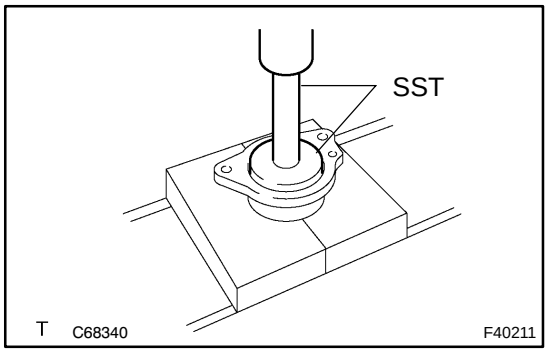

30. INSTALL FRONT DRIVE SHAFT BEARING (RH DRIVE SHAFT)

(a) Using SST and a press, install a new drive shaft bearing.
SST 09950–60010 (09951–00650), 09950–70010 (09951–07100)

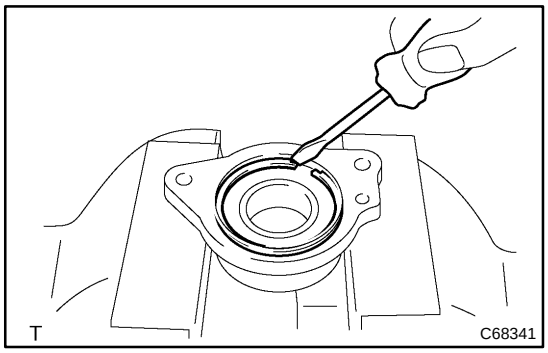

31. INSTALL CASE SUB ASSY, DRIVE SHAFT BEARING SNAP RING (RH DRIVE SHAFT)

(a) Using a screwdriver, install a new drive shaft bearing snap ring.

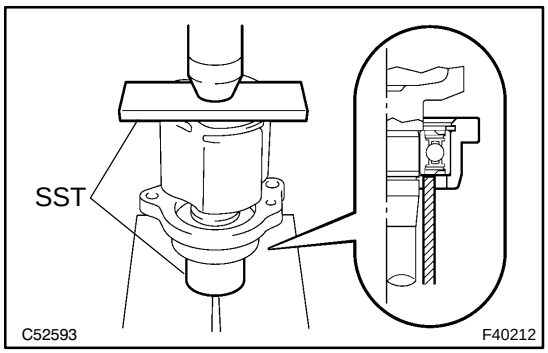

32. INSTALL DRIVE SHAFT BEARING CASE SUB ASSY (RH DRIVE SHAFT)

(a) Using SST and a press, install the bearing case sub–assy to the inboard joint.
SST 09527–10011, 09710–04081

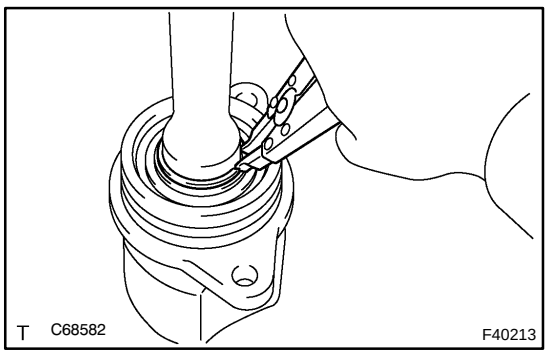

(b) Using a snap ring expander, install a new inner RH shaft snap ring.

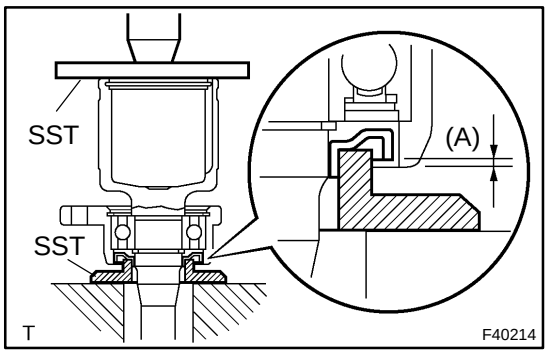

33. INSTALL FRONT DRIVE SHAFT DUST COVER (RH DRIVE SHAFT)

(a) Using SST and a press, install a new dust cover until the distance (A) from the tip of the bearing case sub–assy to the dust cover reaches the specification, as shown in the illustration.

SST 09726–40010, 09527–10011

Distance (A)	1.0 mm (0.039 in.)

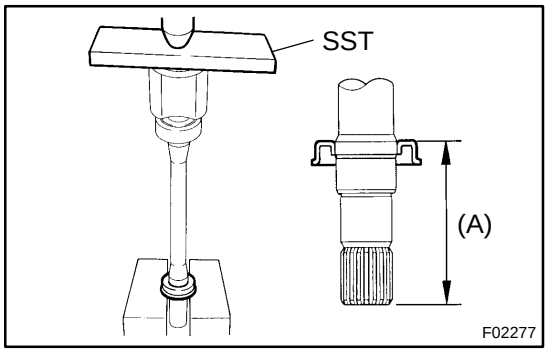

34. INSTALL FRONT DRIVE SHAFT DUST COVER RH

(a) Using SST and a press, install a new dust cover RH until the distance (A) from the tip of center drive shaft to the dust cover RH reaches the specification, as shown in the illustration.

SST 09527–10011

Distance (A)	86.5 ± 0.5 mm (3.406 ± 0.020 in.)

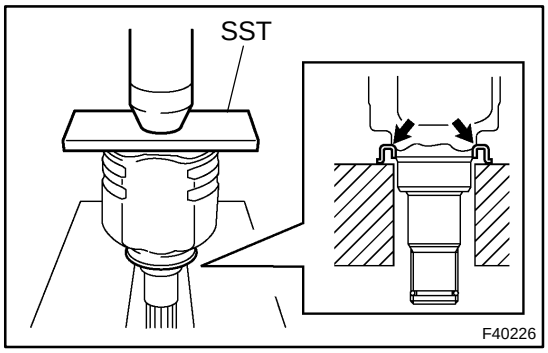

35. INSTALL FRONT DRIVE SHAFT DUST COVER LH

(a) Using SST and a press, install a new dust cover LH as shown in the illustration.

SST 09527–10011

NOTICE:

- **Dust cover should be installed completely.**
- **Be careful not to damage the dust cover.**

36. INSTALL FRONT DRIVE SHAFT LH HOLE SNAP RING

(a) Install a new LH hole snap ring.

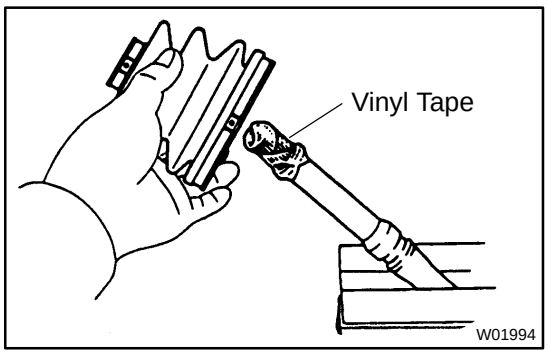

37. INSTALL OUTBOARD JOINT BOOT

HINT:

Before installing the boot, wrap the spline of the drive shaft with vinyl tape prevent the boot from being damaged.

(a) Install new parts to the outboard joint shaft assy in the following order.
  (1) Outboard joint boot LH No.2 clamp
  (2) Outboard joint boot
  (3) Outboard joint boot LH clamp

(b) Pack the outboard joint shaft and boot with grease in the boot kit.

Grease capacity: 152 – 162 g (5.4 – 5.7 oz.)

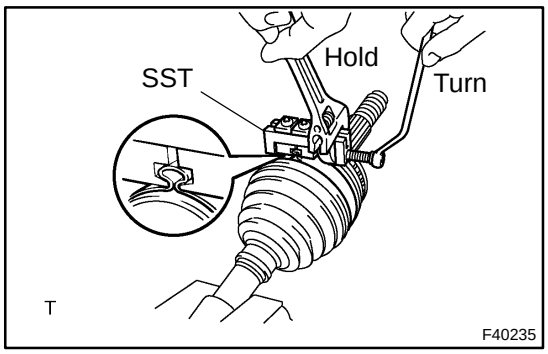

38. INSTALL FRONT AXLE OUTBOARD JOINT BOOT LH NO.2 CLAMP

(a) Mount drive shaft in a soft vise.
(b) Secure the clamp onto the boot.
(c) Place SST onto the clamp.
SST 09521–24010
(d) Tighten the SST so that the clamp is pinched.

NOTICE:
Do not overtighten the SST.

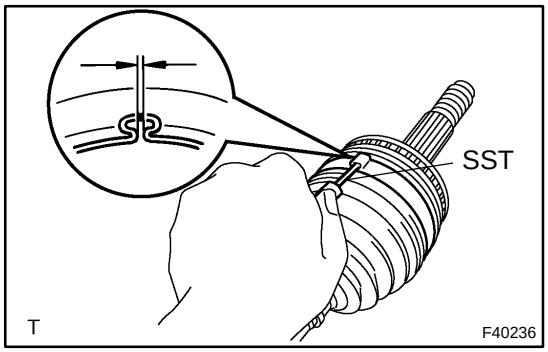

(e) Using SST, measure the clearance of the clamp.
SST 09240–00020 (09242–00080)
Clearance: 0.8 mm (0.032 in.) or less

NOTICE:
When the measured value exceeds the specified value, re-tighten the clamp.

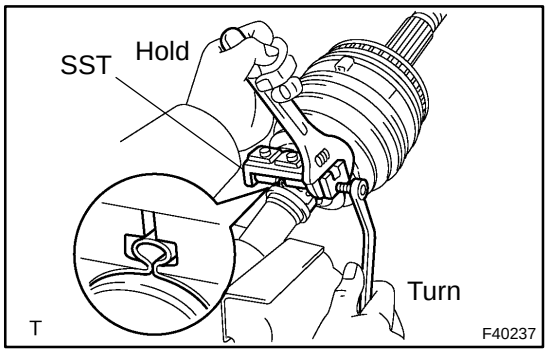

39. INSTALL FRONT AXLE OUTBOARD JOINT BOOT LH CLAMP

(a) Mount drive shaft in a soft vise.
(b) Secure the clamp onto the boot.
(c) Place SST onto the clamp.
SST 09521–24010
(d) Tighten the SST so that the clamp is pinched.

NOTICE:
Do not overtighten the SST.

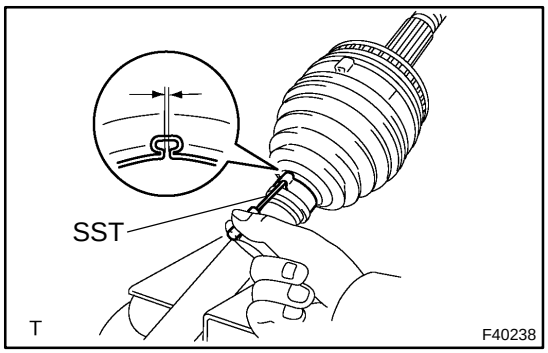

(e) Using SST, measure the clearance of the clamp.
SST 09240–00020 (09242–00080)
Clearance: 0.8 mm (0.032 in.) or less

NOTICE:
When the measured value exceeds the specified value, re-tighten the clamp.

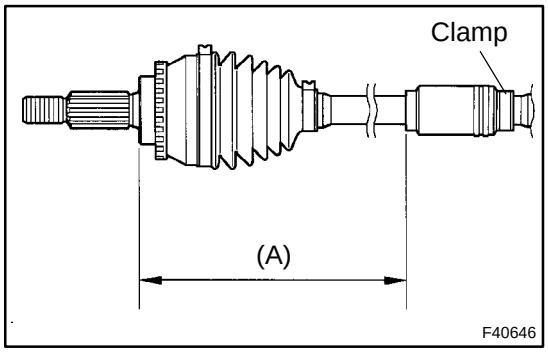

40. INSTALL DRIVE SHAFT DAMPER (M/T TRANSAXLE)

HINT:
Perform the procedure below only when reassembling the RH side.

(a) Set the distance (A), as described below.

Distance (A)	200 mm ± 2 mm (7.87 ± 0.08 in.)

(b) Through the damper setting clamp to the shaft.

NOTICE:
Be sure to install the clamp in the correct position.

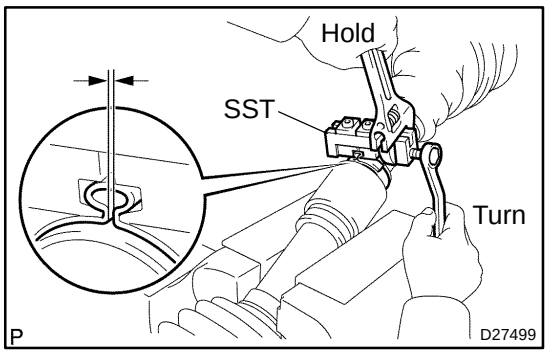

(c) Mount drive shaft in a soft vise.
(d) Secure the damper setting clamp onto the damper.
(e) Place SST onto the damper setting clamp.
SST 09521–24010
(f) Tighten the SST so that the clamp is pinched.

NOTICE:
Do not overtighten the SST.

(g) Using SST, measure the clearance of the damper setting clamp.
SST 09240–00020 (09242–00080)
Clearance: 0.8 mm (0.032 in.) or less

NOTICE:
When the measured value exceeds the specified value, re-tighten the clamp.

41. INSTALL FRONT DRIVE INBOARD JOINT ASSY LH

HINT:
Before installing the boot, wrap the spline of the drive shaft with vinyl tape to prevent the boot from being damaged.

(a) Install new parts to the outboard joint shaft assy in the following order.
(1) Inboard joint boot LH clamp
(2) Inboard joint boot
(3) Inboard joint boot LH No.2 clamp

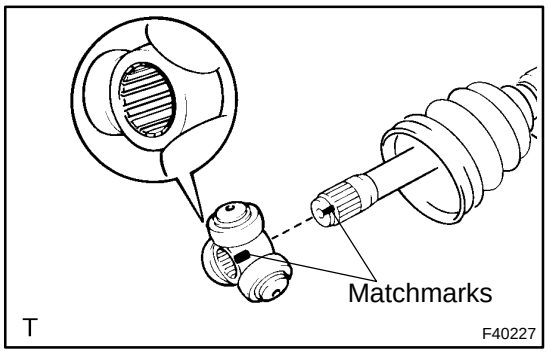

(b) Align the matchmarks, install tripod joint assy to the outboard joint assy.
(c) Using a brass bar and a hammer, install the tripod joint assy.

NOTICE:
Do not tap the roller.

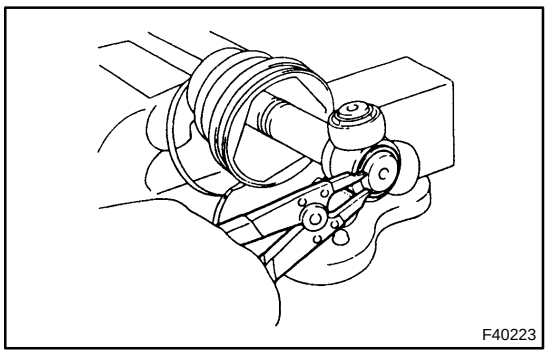

(d) Using a snap ring expander, install a new inner LH shaft snap ring.
(e) Pack the inboard joint sub–assy LH with grease.
Grease capacity: 160 – 180 g (5.6 – 6.3 oz.)

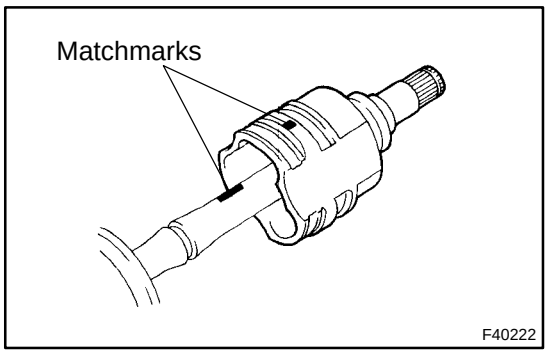

(f) Align the matchmarks, install the inboard joint sub–assy LH to the outboard joint shaft assy.

42. INSTALL INBOARD JOINT BOOT

(a) Install the inboard joint boot to the inboard joint assy and outboard joint shaft assy.

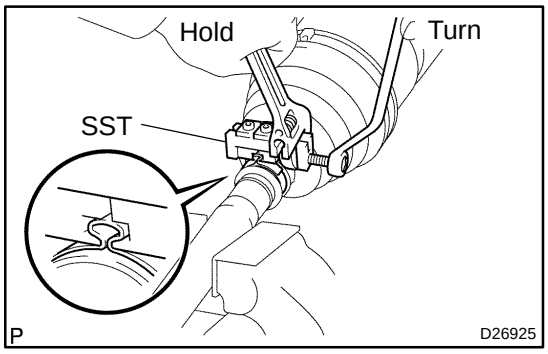

43. INSTALL FRONT AXLE INBOARD JOINT BOOT LH CLAMP

(a) Mount drive shaft in a soft vise.
(b) Secure the clamp onto the boot.
(c) Place SST onto the clamp.
SST 09521–24010
(d) Tighten the SST so that the clamp is pinched.

NOTICE:
Do not overtighten the SST.

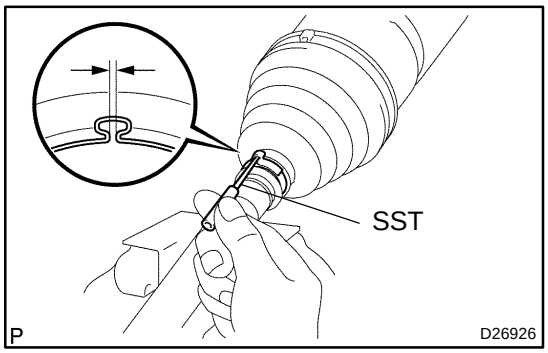

(e) Using SST, measure the clearance of the clamp.
SST 09240–00020 (09242–00080)
Clearance: 0.8 mm (0.032 in.) or less

NOTICE:
When the measured value exceeds the specified value, re-tighten the clamp.

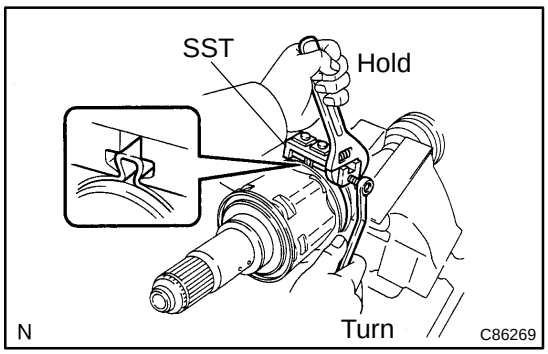

44. INSTALL FRONT AXLE INBOARD JOINT BOOT LH NO.2 CLAMP

(a) Mount drive shaft in a soft vise.
(b) Secure the clamp onto the boot.
(c) Place SST onto the clamp.
SST 09521–24010
(d) Tighten the SST so that the clamp is pinched.

NOTICE:
Do not overtighten the SST.

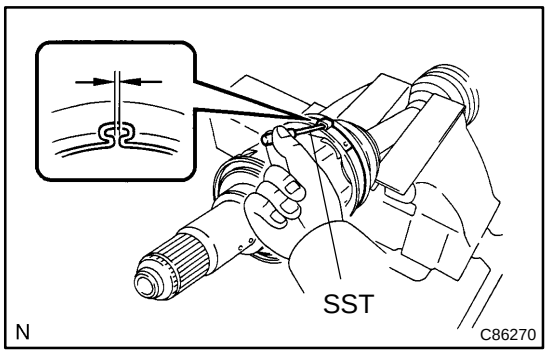

(e) Using SST, measure the clearance of the clamp.
SST 09240–00020 (09242–00080)
Clearance: 0.8 mm (0.032 in.) or less

NOTICE:

When the measured value exceeds the specified value, retighten the clamp.

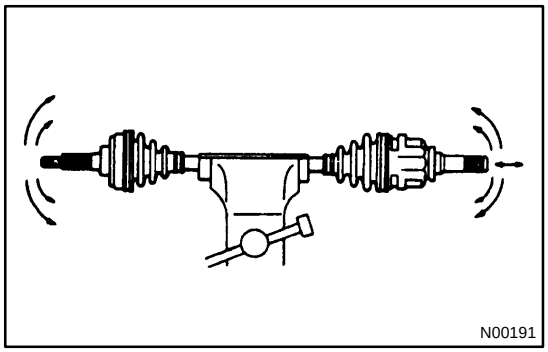

45. INSPECT FRONT DRIVE SHAFT ASSY LH

(a) Check that there is no remarkable play in the outboard joint.
(b) Check that the inboard joint slides smoothly in the thrust direction.
(c) Check that there is no remarkable play in the radial direction of the inboard joint.
(d) Check the boots for damage.

NOTICE:

Keep the drive shaft assy level during inspection.

HINT:

For dimension (A), refer to the following table.

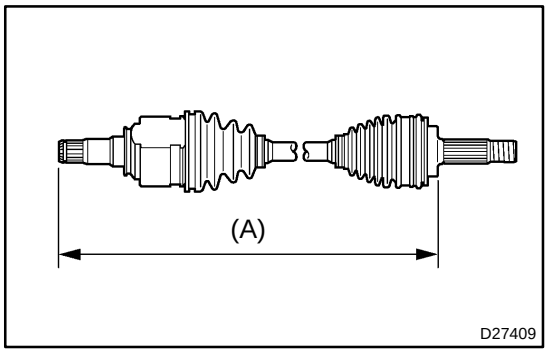

RH	863.0 ± 5.0 mm (33.976 ± 0.197 in.)
LH	576.7 ± 5.0 mm (22.705 ± 0.197 in.)

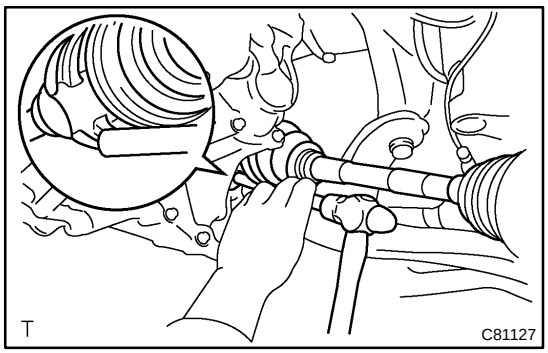

46. INSTALL FRONT DRIVE SHAFT ASSY LH

(a) A/T:
Coat the spline of the inboard joint shaft assy with ATF.
(b) M/T:
Coat the spline of the inboard joint shaft assy with gear oil.
(c) Align the shaft splines, install the drive shaft assy RH with brass bar and a hammer.

NOTICE:

- **Set the hole snap ring with opening side facing downwards.**
- **Be careful not to damage the oil seal, boot and dust cover.**

HINT:

Whether the inboard joint shaft is in contact with the pinion shaft or not can be known from the sound or feeling when driving it in.

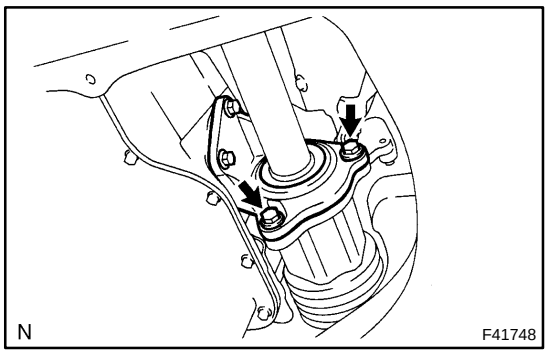

47. INSTALL FRONT DRIVE SHAFT ASSY RH

(a) A/T:
Coat the spline of the inboard joint shaft assy with ATF.

(b) M/T:
Coat the spline of the inboard joint shaft assy with gear oil.

(c) Aline the shaft splines, install the drive shaft assy RH with the 2 bearing lock bolts.
Torque: 64 N·m (650 kgf·cm, 47 ft·lbf)

NOTICE:
Be careful not to damage the oil seal, boot and dust cover.

48. INSTALL FRONT AXLE ASSY LH

(a) Install the drive shaft assy LH to the front axle assy LH.

NOTICE:
Be careful not to damage the outboard joint boot and speed sensor rotor.

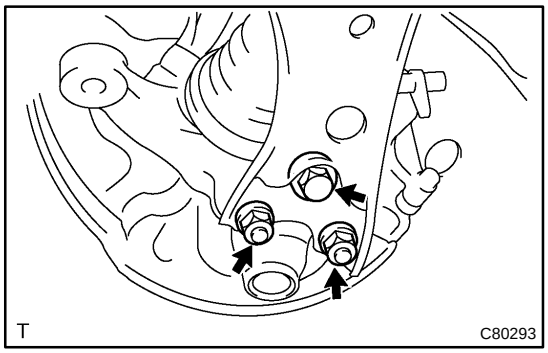

49. INSTALL FRONT SUSPENSION ARM SUB–ASSY LOWER NO.1 LH

(a) Install the lower ball joint to the front suspension arm sub–assy lower No.1 LH with the bolt and 2 nuts.
Torque: 89 N·m (908 kgf·cm, 66 ft·lbf)

50. INSTALL TIE ROD END SUB–ASSY LH

(a) Install the tie rod end sub–assy LH to the steering knuckle with the nut.
Torque: 49 N·m (500 kgf·cm, 36 ft·lbf)

(b) Install a new cotter pin.

NOTICE:
If the holes for the cotter pin are not aligned, tighten the nut further to 60°.

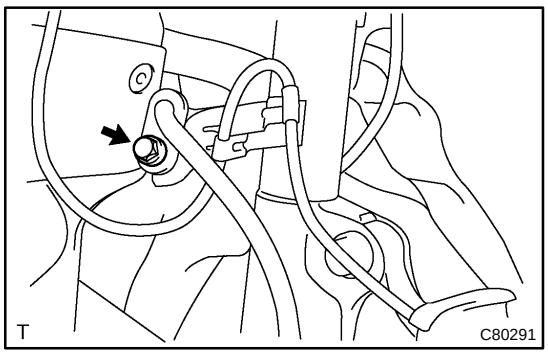

51. INSTALL SPEED SENSOR FRONT LH

(a) Install the speed sensor front LH and flexible hose to shock absorber assy front LH with the bolt.
Torque: 29 N·m (296 kgf·cm, 21 ft·lbf)

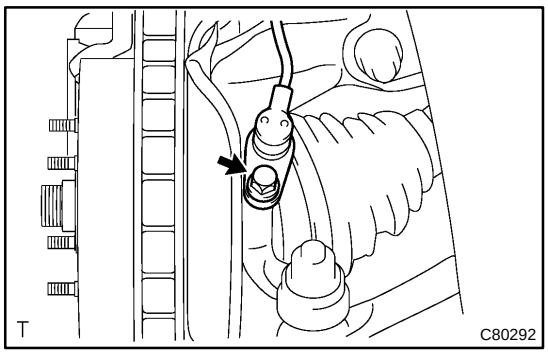

(b) Install the speed sensor front LH to the steering knuckle with the bolt.
Torque: 8.0 N·m (82 kgf·cm, 71 ft·lbf)

NOTICE:

- **Be careful not to damage the speed sensor.**
- **Keep the speed sensor clean.**
- **Do not twist the sensor wire when installing the sensor.**

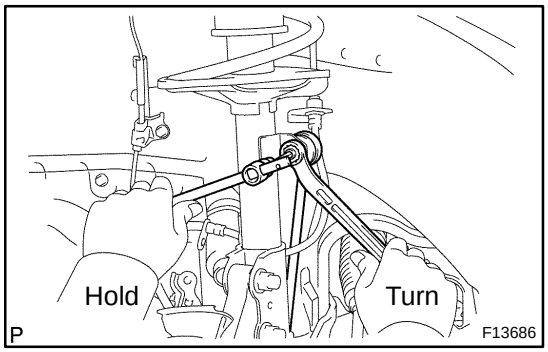

52. INSTALL FRONT STABILIZER LINK ASSY LH

(a) Install the front stabilizer link assy LH with the nut.
Torque: 74 N·m (755 kgf·cm, 55 ft·lbf)

HINT:

If the ball joint turns together with the nut, use a hexagon wrench (6 mm) to hold the stud.

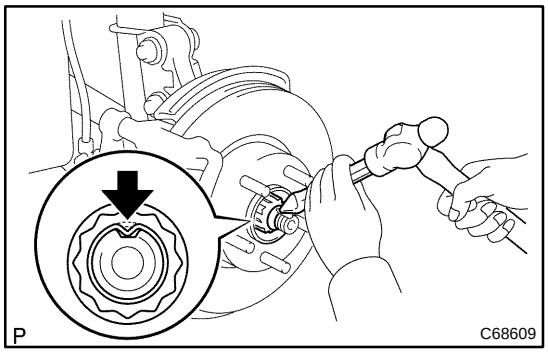

53. INSTALL FRONT AXLE HUB LH NUT

(a) Install a new hub LH nut.
Torque: 216 N·m (2,200 kgf·cm, 159 ft·lbf)

(b) Using a chisel and a hammer, stake the hub LH nut.

54. INSTALL FRONT WHEEL
Torque: 103 N·m (1,050 kgf·cm, 76 ft·lbf)

55. ADD MANUAL TRANSAXLE OIL (M/T TRANSAXLE)

56. INSPECT AND ADJUST MANUAL TRANSAXLE OIL (M/T TRANSAXLE) (See page 41–2)

57. ADD AUTOMATIC TRANSAXLE FLUID (A/T TRANSAXLE)

58. INSPECT AUTOMATIC TRANSAXLE FLUID (A/T TRANSAXLE) (See page 40–2)

59. INSPECT AND ADJUST FRONT WHEEL ALIGNMENT (See page 26–6)

60. CHECK ABS SPEED SENSOR SIGNAL (See page 05–316)

FRONT DRIVE SHAFT (1ZZ–FE)

COMPONENTS

300B1–01

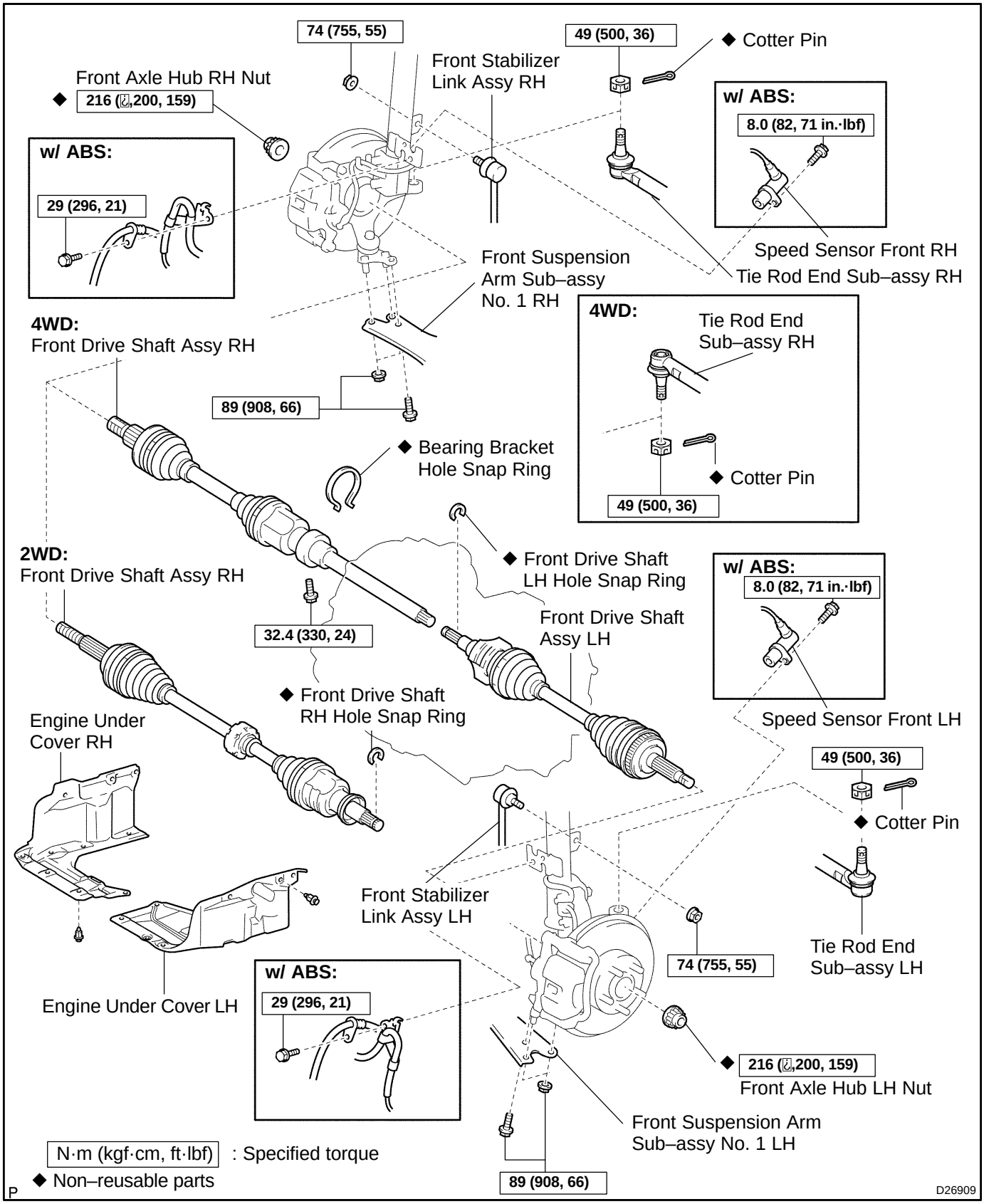

2WD:

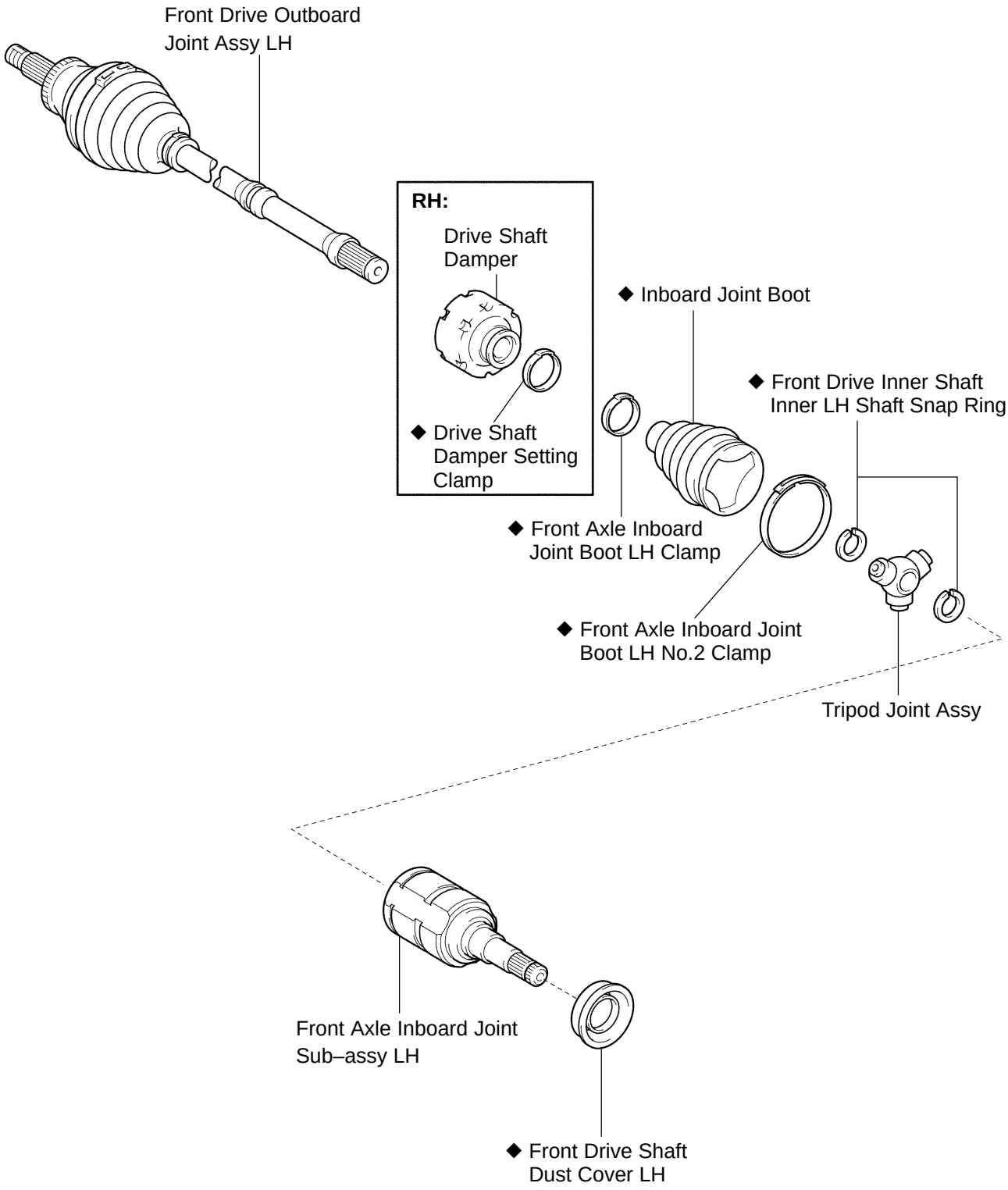

◆ Non–reusable parts

P D26924

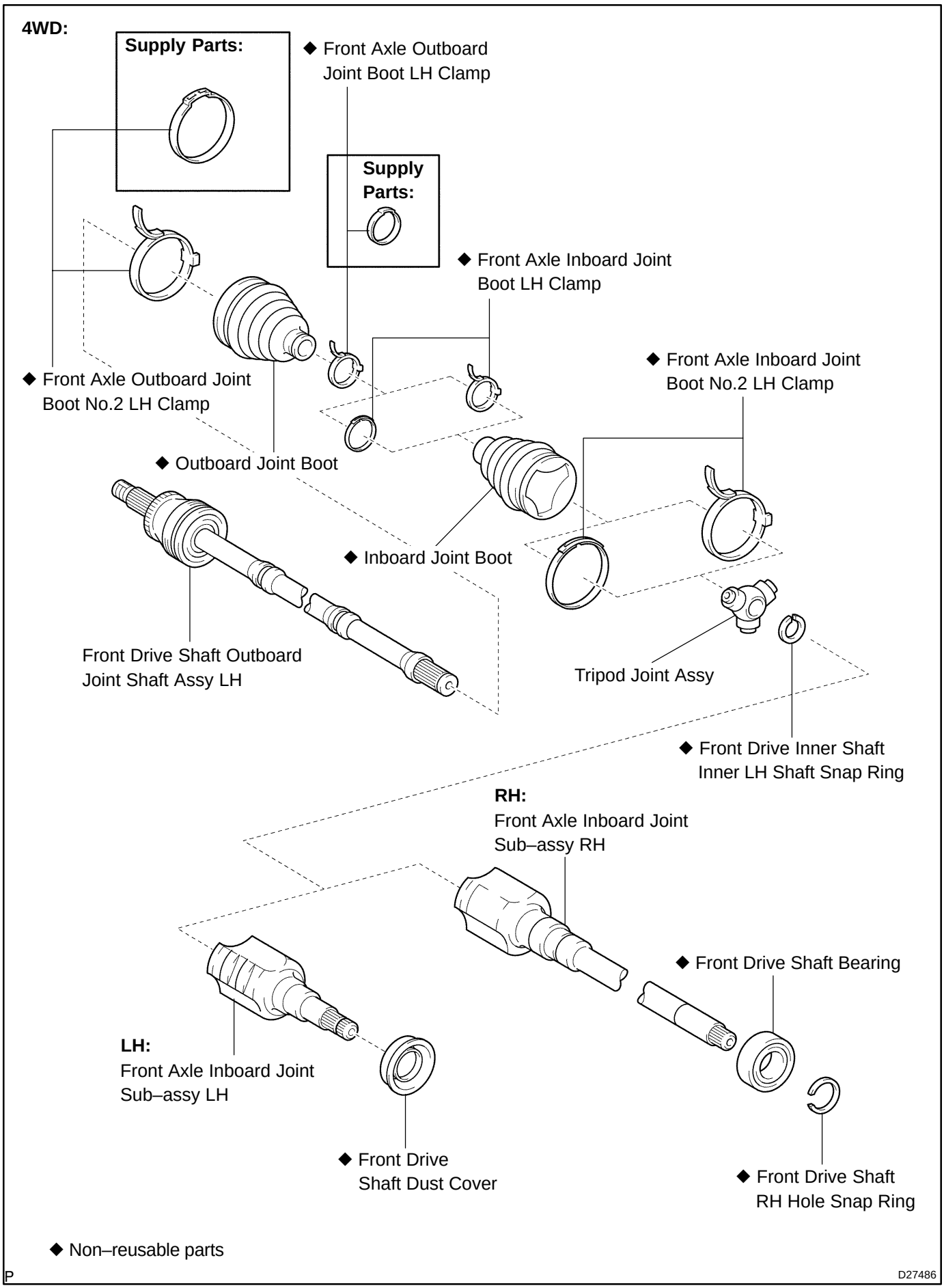
4WD:
Supply Parts:
◆ Front Axle Outboard Joint Boot LH Clamp
Supply Parts:
◆ Front Axle Inboard Joint Boot LH Clamp
◆ Front Axle Outboard Joint Boot No.2 LH Clamp
◆ Front Axle Inboard Joint Boot No.2 LH Clamp
◆ Outboard Joint Boot
◆ Inboard Joint Boot
Front Drive Shaft Outboard Joint Shaft Assy LH
Tripod Joint Assy
◆ Front Drive Inner Shaft Inner LH Shaft Snap Ring
RH:
Front Axle Inboard Joint Sub–assy RH
◆ Front Drive Shaft Bearing
LH:
Front Axle Inboard Joint Sub–assy LH
◆ Front Drive Shaft Dust Cover
◆ Front Drive Shaft RH Hole Snap Ring
◆ Non–reusable parts
P
D27486

300B2–01

OVERHAUL

1. DRAIN MANUAL TRANSAXLE OIL (M/T TRANSAXLE)
Torque: 39.2 N·m (400 kgf·cm, 29 ft·lbf)

2. DRAIN AUTOMATIC TRANSAXLE FLUID (A/T TRANSAXLE)
Torque:
2WD: 17.5 N·m (178 kgf·cm, 13 ft·lbf)
4WD: 49 N·m (500 kgf·cm, 36 ft·lbf)

3. DRAIN TRANSFER OIL (4WD DRIVE TYPE)

HINT:

Perform the procedure below only when removing the RH side.

Torque: 49 N·m (500 kgf·cm, 36 ft·lbf)

4. REMOVE FRONT WHEEL

5. REMOVE ENGINE UNDER COVER LH

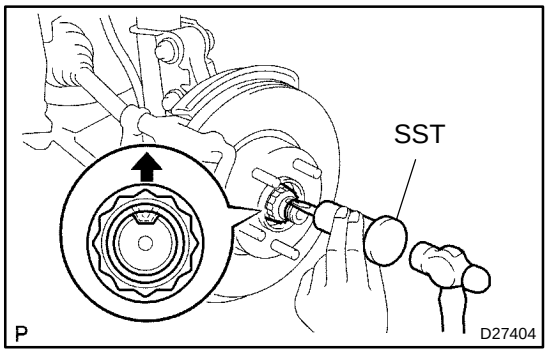

6. REMOVE FRONT AXLE HUB LH NUT

(a) Using SST and a hammer, unstake the staked part of the hub LH nut.
SST 09930–00010

(b) While applying the brakes, remove the hub LH nut.

NOTICE:

Loosen the staked part of the nut completely, otherwise the screw of the drive shaft may be damaged.

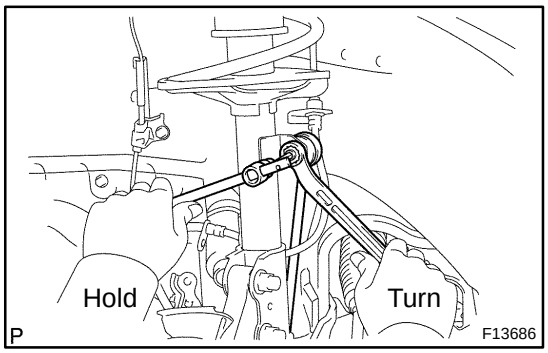

7. SEPARATE FRONT STABILIZER LINK ASSY LH

(a) Remove the nut and separate the front stabilizer link assy LH from the shock absorber assy front LH.

HINT:

If the ball joint turns together with the nut, use a hexagon wrench (6 mm) to hold the stud.

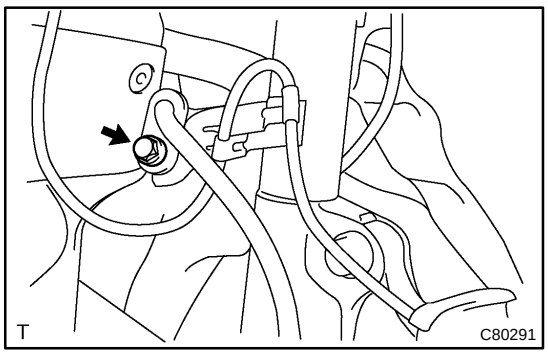

8. SEPARATE SPEED SENSOR FRONT LH (W/ ABS)

(a) Remove the bolt, separate the speed sensor front LH and flexible hose from the shock absorber assy front LH.

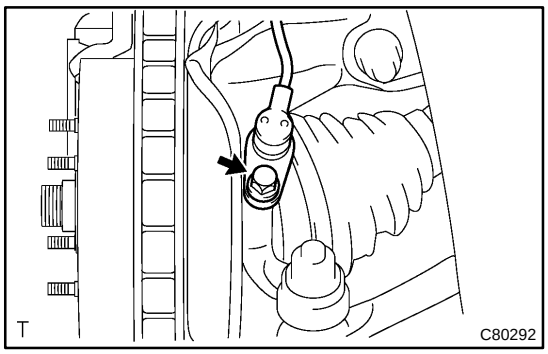

(b) Remove the bolt, separate the speed sensor front LH from the steering knuckle.

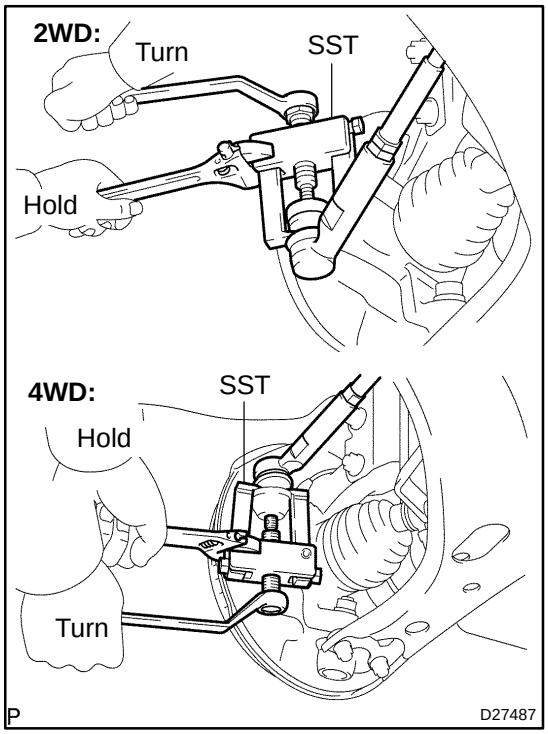

9. SEPARATE TIE ROD END SUB–ASSY LH

(a) Remove the cotter pin and nut.

(b) Using SST, separate the tie rod end sub–assy LH from the steering knuckle.

SST 09628–62011

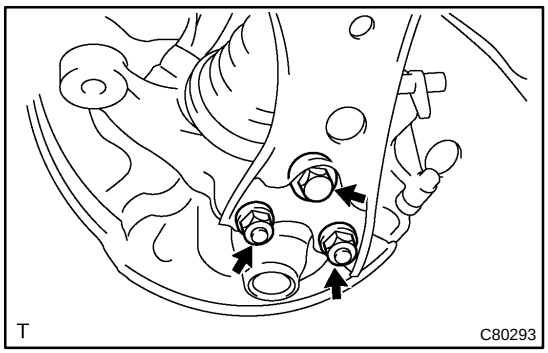

10. SEPARATE FRONT SUSPENSION ARM SUB–ASSY LOWER NO.1 LH

(a) Remove the bolt and 2 nuts, separate the front suspension arm sub–assy lower No.1 LH from the lower ball joint.

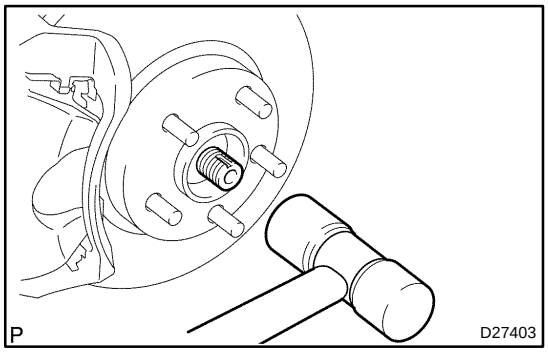

11. SEPARATE FRONT AXLE ASSY LH

(a) Using a plastic hammer, separate the front drive shaft assy LH from the front axle assy LH.

NOTICE:

- **Be careful not to damage the boot.**
- **w/ ABS:**
  Be careful not to damage the speed sensor rotor.

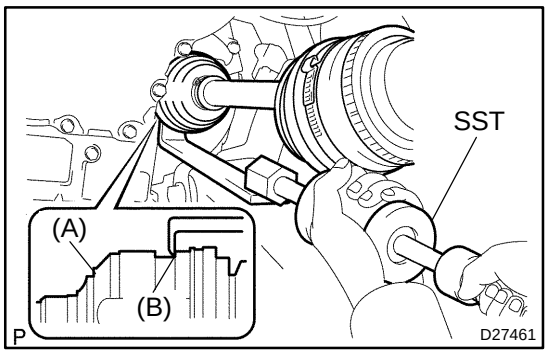

12. REMOVE FRONT DRIVE SHAFT ASSY LH

(a) Using SST, remove the front drive shaft assy LH.
SST 09520–01010, 09520–24010 (09520–32040)

NOTICE:

- **Be careful not to damage the oil seal, boot and dust cover.**
- **Be careful not to drop the drive shaft assy.**

HINT:

In case of not being able to remove the drive shaft at the position of the illustration (A), hook the claw of SST to the position of the illustration (B), remove it.

13. REMOVE FRONT DRIVE SHAFT ASSY RH (2WD DRIVE TYPE)

HINT:

Remove the RH side by the same procedures as the LH side.

NOTICE:

- **Be careful not to damage the oil seal, boot and dust cover.**
- **Be careful not to drop the drive shaft assy.**

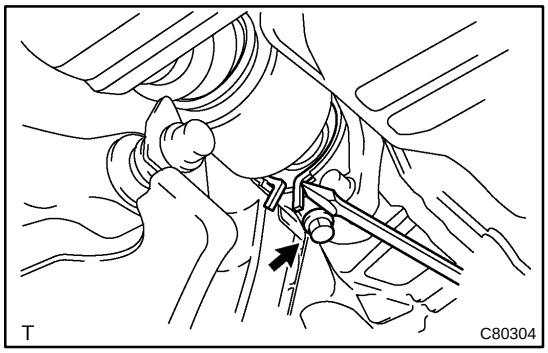

14. REMOVE FRONT DRIVE SHAFT ASSY RH (4WD DRIVE TYPE)

(a) Remove the bearing lock bolt.
(b) Using screwdriver, remove the hole snap ring and front drive shaft assy RH.

NOTICE:

- **In case of removing and installing the drive shaft assy RH, drain all of the transaxle oil and transfer oil.**
  In case of having removed and installed (the drive shaft assy RH) without draining the oils, as the transfer oil flows into the transaxle side and 2 oils are mixed, inside of the transfer and transaxle need cleaning.
- **Do not damage the oil seal and dust cover.**

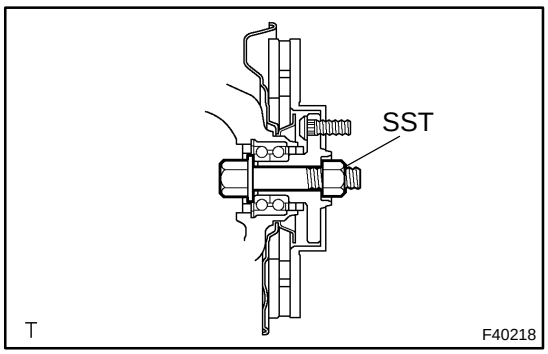

15. FIX FRONT AXLE ASSY LH

NOTICE:

The hub bearing could be damaged if it is subjected to the vehicle weight, such as when moving the vehicle with the drive shaft removed.

Therefore, make sure to support the hub bearing with SST when the vehicle weight is applied.

SST 09608–16042 (09608–02021, 09608–02041)

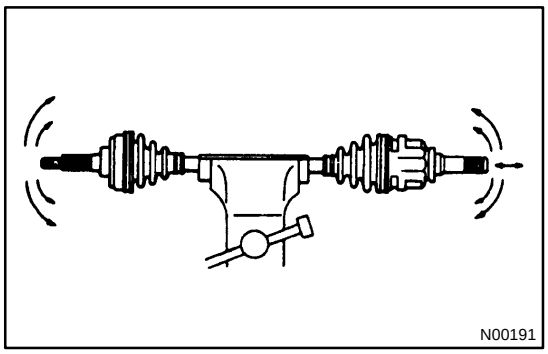

16. INSPECT FRONT DRIVE SHAFT ASSY LH

(a) Check that there is no remarkable play in the outboard joint.

(b) Check that the inboard joint slides smoothly in the thrust direction.

(c) Check that there is no remarkable play in the radial direction of the inboard joint.

(d) Check the boots for damage.

NOTICE:

Keep the drive shaft assy level during inspection.

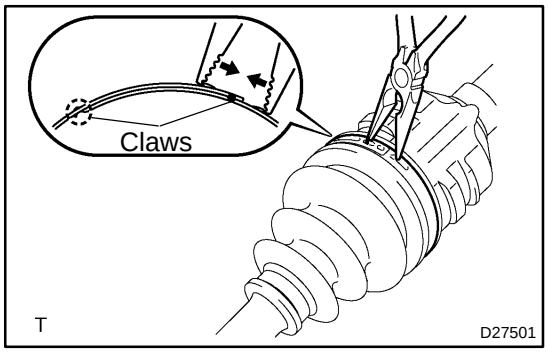

17. REMOVE FRONT AXLE INBOARD JOINT BOOT LH NO.2 CLAMP (2WD DRIVE TYPE)

(a) Using a needle nose pliers, remove the inboard joint boot LH No.2 clamp as shown in the illustration.

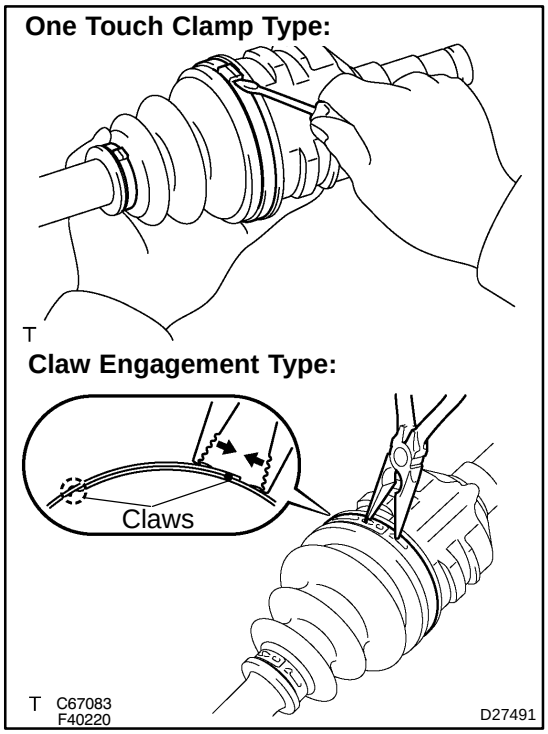

18. REMOVE FRONT AXLE INBOARD JOINT BOOT LH NO.2 CLAMP (4WD DRIVE TYPE)

(a) One Touch Clamp Type:
Using a screwdriver, disclamp the inboard joint boot LH No.2 clamp.

(b) Claw Engagement Type:
Using a needle nose pliers, remove the inboard joint boot LH No.2 clamp as shown in the illustration.

19. REMOVE FRONT AXLE INBOARD JOINT BOOT LH CLAMP (2WD DRIVE TYPE)

(a) Using a side cutter, cut the inboard joint boot LH clamp, then remove it.

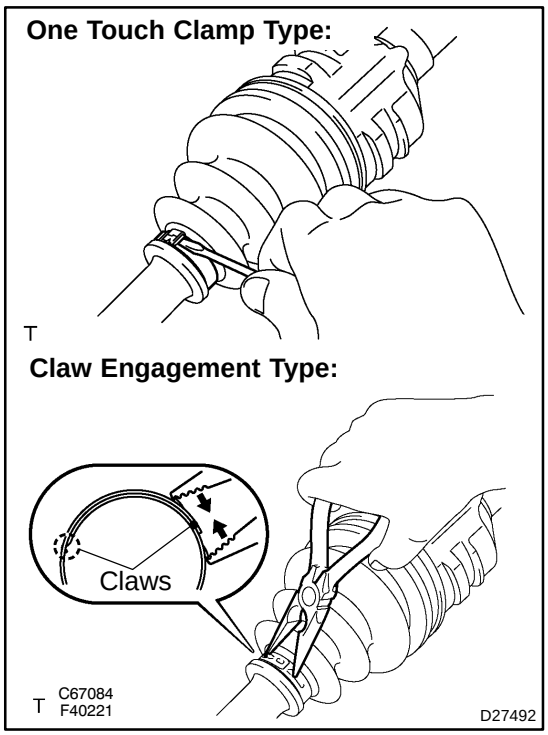

20. REMOVE FRONT AXLE INBOARD JOINT BOOT LH CLAMP (4WD DRIVE TYPE)

(a) One Touch Clamp Type:
Using a screwdriver, disclamp the inboard joint boot LH clamp.

(b) Claw Engagement Type:
Using a needle nose pliers, remove the inboard joint boot LH clamp as shown in the illustration.

21. SEPARATE INBOARD JOINT BOOT

(a) Separate the inboard joint boot from the inboard joint sub–assy LH.

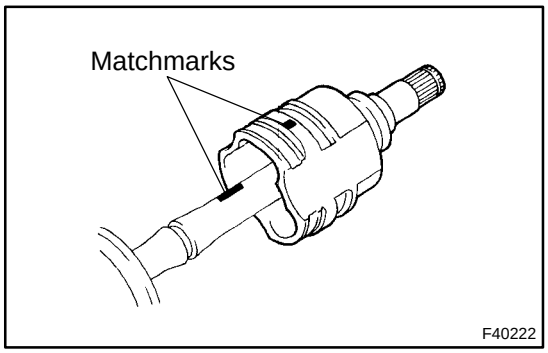

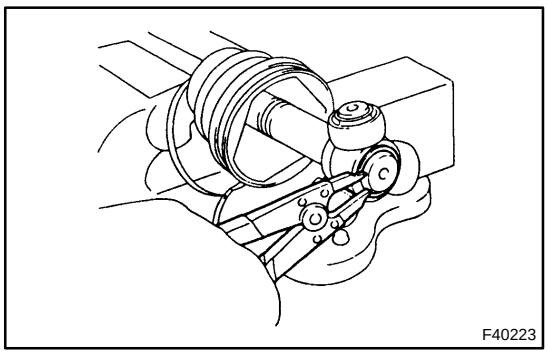

22. REMOVE FRONT AXLE INBOARD JOINT SUB–ASSY LH

(a) Remove the old grease from the inboard joint sub–assy LH.

(b) Place matchmarks on the inboard joint sub–assy LH and outboard joint shaft assy.

NOTICE:

Do not punch the marks.

(c) Remove the inboard joint sub–assy LH from the outboard joint shaft assy.

(d) Using a snap ring expander, remove the inner LH shaft snap ring.

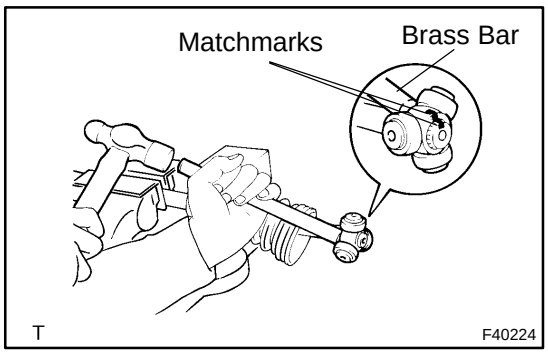

(e) Place matchmarks on the outboard joint shaft assy and tripod joint assy.

NOTICE:

Do not punch the marks.

(f) Using a brass bar and a hammer, remove the tripod joint assy from the outboard joint shaft assy.

NOTICE:

Do not tap the roller.

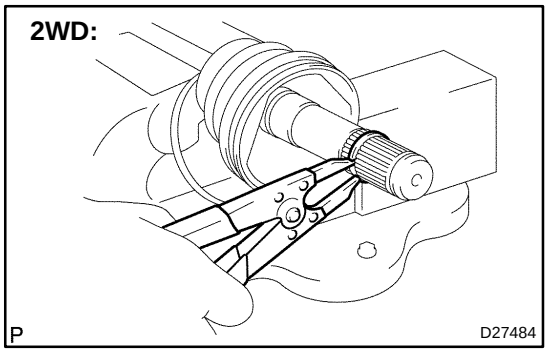

(g) 2WD:
Using a snap ring expander, remove the inner LH shaft snap ring.

(h) Remove the inboard joint boot LH No.2 clamp, inboard joint boot and inboard joint boot LH clamp.

23. REMOVE DRIVE SHAFT DAMPER (2WD DRIVE TYPE)

HINT:

Perform the procedure below only when disassembling the RH side.

(a) Using a side cutter, out the drive shaft damper setting clamp, then remove it.

(b) Remove the drive shaft damper.

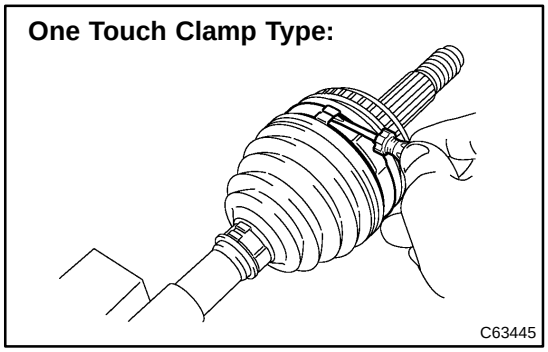

24. REMOVE FRONT AXLE OUTBOARD JOINT BOOT LH NO.2 CLAMP (4WD DRIVE TYPE)

(a) One Touch Clamp Type:
Using a screwdriver, disclamp the outboard joint boot LH No.2 clamp.

(b) Omega Clamp Type:
Using a side cutter, cut the outboard joint LH No.2 clamp, then remove it.

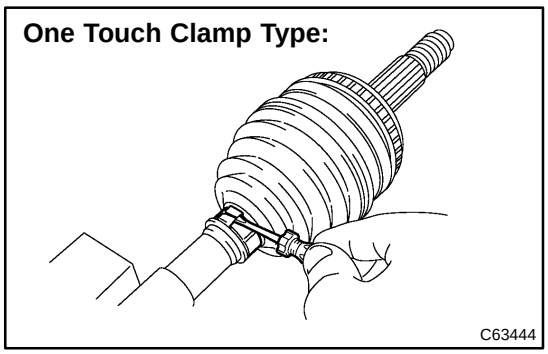

25. REMOVE FRONT AXLE OUTBOARD JOINT BOOT LH CLAMP (4WD DRIVE TYPE)

(a) One Touch Clamp Type:
Using a screwdriver, disclamp the outboard joint boot LH clamp.

(b) Omega Clamp Type:
Using a side cutter, cut the outboard joint LH clamp, then remove it.

26. REMOVE OUTBOARD JOINT BOOT (4WD DRIVE TYPE)

(a) Remove the outboard joint boot from the outboard joint shaft assy.

(b) Remove the old grease from the outboard joint.

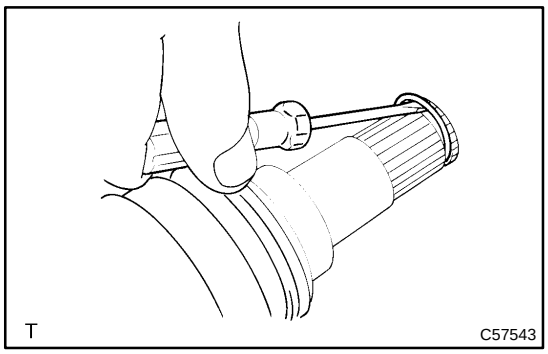

27. REMOVE FRONT DRIVE SHAFT LH HOLE SNAP RING

(a) Using a screwdriver, remove the LH hole snap ring.

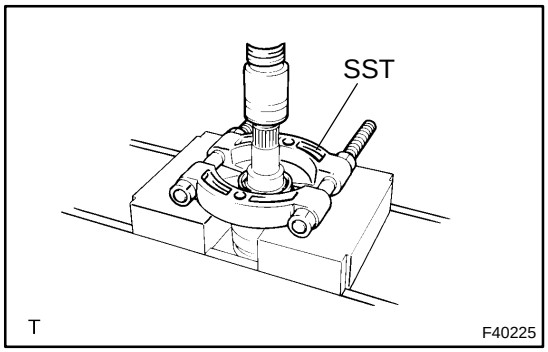

28. REMOVE FRONT DRIVE SHAFT DUST COVER LH

(a) Using SST and a press, remove the dust cover LH.
SST 09950–00020

NOTICE:

Be careful not to drop the inboard joint.

29. REMOVE FRONT DRIVE SHAFT DUST COVER RH (2WD DRIVE TYPE)

HINT:

Remove the RH side by the same procedures as LH side.
SST 09950–00020

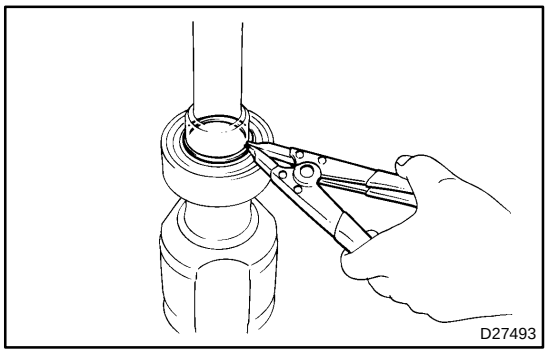

30. REMOVE FRONT DRIVE SHAFT BEARING (4WD DRIVE TYPE)

(a) Using a snap ring expander, remove the RH hole snap ring.

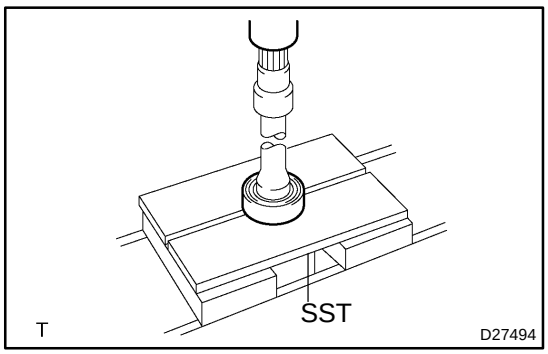

(b) Using SST and a press, remove the front drive shaft bearing.
SST 09527–10011

NOTICE:

Be careful not to drop the inboard joint.

(c) Remove the bearing bracket hole snap ring.

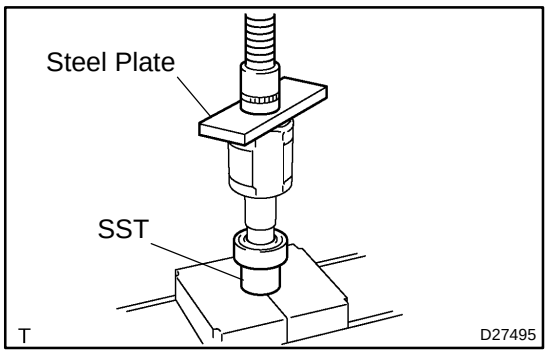

31. INSTALL FRONT DRIVE SHAFT BEARING (4WD DRIVE TYPE)

(a) Through a new bearing bracket hole snap ring.

(b) Using SST and a steel plate, install a new front drive shaft bearing.

SST 09710–30021 (09710–03141)

NOTICE:

Bearing should be installed completely.

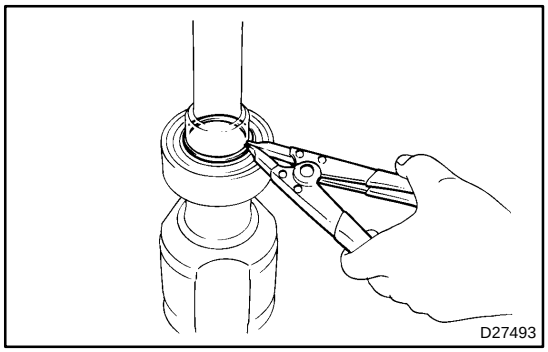

(c) Using a snap ring expander, install a new RH hole snap ring.

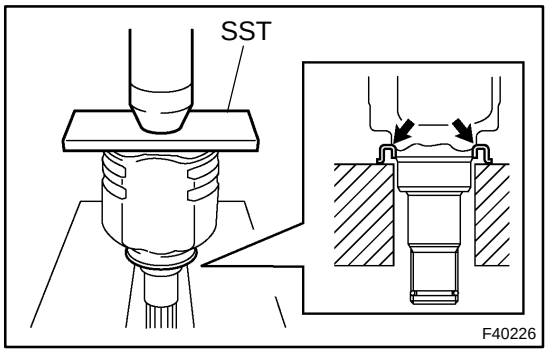

32. INSTALL FRONT DRIVE SHAFT DUST COVER LH

(a) Using SST and a press, install the dust cover LH as shown in the illustration.

SST 09527–10011

NOTICE:

- **Dust cover should be installed completely.**
- **Be careful not to damage the dust cover.**

33. INSTALL FRONT DRIVE SHAFT DUST COVER RH (2WD DRIVE TYPE)

HINT:

Install the RH side by the same procedures as LH side.

SST 09527–10011

34. INSTALL FRONT DRIVE SHAFT LH HOLE SNAP RING

(a) Install a new LH hole snap ring.

35. INSTALL OUTBOARD JOINT BOOT (4WD DRIVE TYPE)

(a) Wrap the spline of the outboard joint shaft with vinyl tape to prevent them from being damaged.

(b) Install new parts to the inboard joint shaft assy in the following order.

(1) Outboard joint boot LH No.2 clamp

(2) Outboard joint boot

(3) Outboard joint boot LH clamp

(c) Park the outboard joint assy LH with grease.

Grease capacity: 130 – 140 g (4.6 – 4.9 oz.)

(d) Install the outboard joint boot to the outboard joint shaft assy.

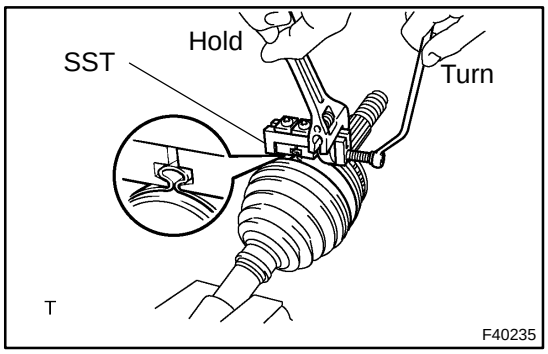

36. INSTALL FRONT AXLE OUTBOARD JOINT BOOT LH NO.2 CLAMP (4WD DRIVE TYPE)

(a) Mount drive shaft in a soft vise.
(b) Secure the clamp onto the boot.
(c) Place SST onto the clamp.
SST 09521–24010
(d) Tighten the SST so that the clamp is pinched.

NOTICE:
Do not overtighten the SST.

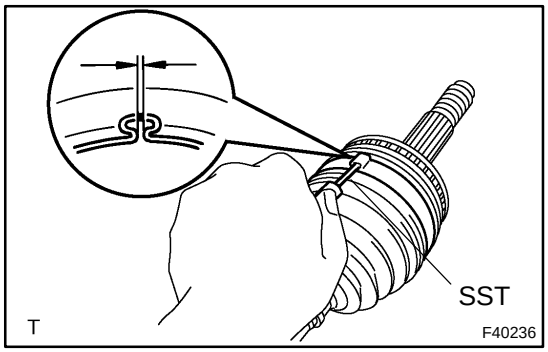

(e) Using SST, measure the clearance of the clamp.
SST 09240–00020 (09242–00080)
Clearance: 0.8 mm (0.031 in.) or less

NOTICE:
When the measured value exceeds the specified value, re-tighten the clamp.

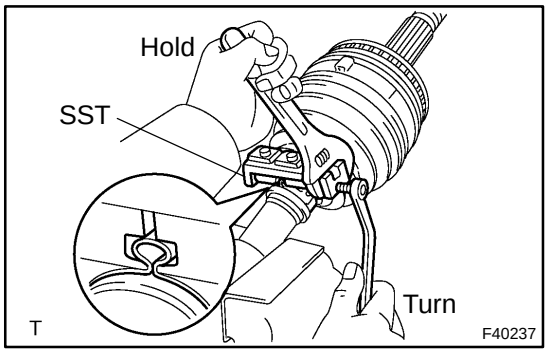

37. INSTALL FRONT AXLE OUTBOARD JOINT BOOT LH CLAMP (4WD DRIVE TYPE)

(a) Mount drive shaft in a soft vise.
(b) Secure the clamp onto the boot.
(c) Place SST onto the clamp.
SST 09521–24010
(d) Tighten the SST so that the clamp is pinched.

NOTICE:
Do not overtighten the SST.

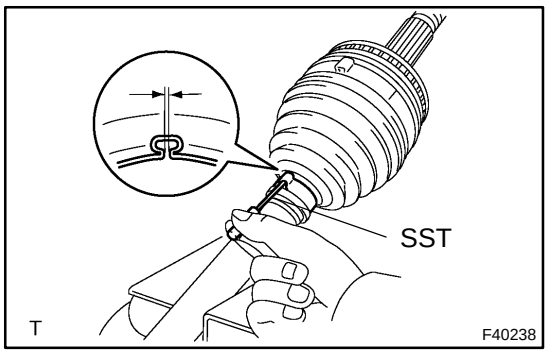

(e) Using SST, measure the clearance of the clamp.
SST 09240–00020 (09242–00080)
Clearance: 0.8 mm (0.031 in.) or less

NOTICE:
When the measured value exceeds the specified value, re-tighten the clamp.

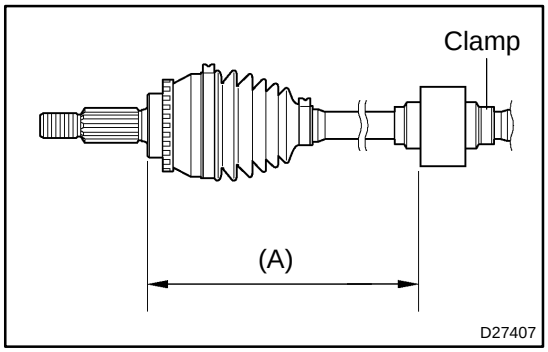

38. INSTALL DRIVE SHAFT DAMPER (2WD DRIVE TYPE)

HINT:
Perform the procedure below only when reassembling the RH side.

(a) Set the distance, as described below.

Distance (A)	440 mm ± 2 mm (17.32 ± 0.08 in.)

(b) Through the damper setting clamp to the shaft.

NOTICE:
Be sure to install the clamp in the correct position.

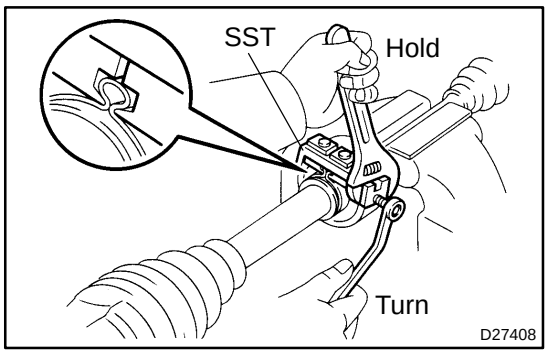

(c) Mount drive shaft in a soft vise.
(d) Secure the damper setting clamp onto the damper.
(e) Place SST onto the damper setting clamp.
SST 09521–24010
(f) Tighten the SST so that the clamp is pinched.

NOTICE:
Do not overtighten the SST.

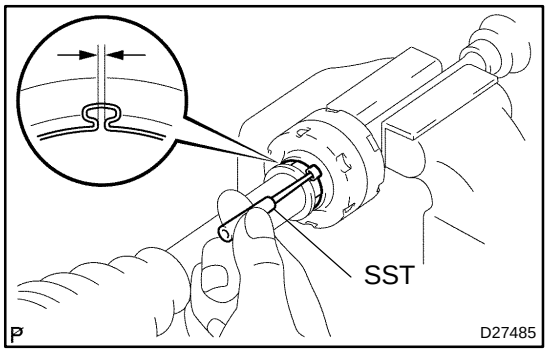

(g) Using SST, measure the clearance of the damper setting clamp.
SST 09240–00020 (09242–00150)
Clearance: 1.5 mm (0.059 in.) or less

NOTICE:
When the measured value exceeds the specified value, re-tighten the clamp.

39. INSTALL FRONT AXLE INBOARD JOINT SUB–ASSY LH

HINT:
Before installing the boot, wrap the spline of the drive shaft with vinyl tape to prevent the boot from being damaged.

(a) Install new parts to the outboard joint shaft assy in the following order.
(1) Inboard joint boot LH clamp
(2) Inboard joint boot
(3) Inboard joint boot LH No.2 clamp

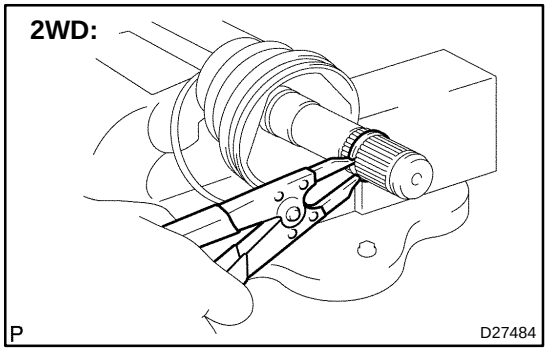

(b) 2WD:
Using a snap ring expander, install a new inner LH shaft snap ring.

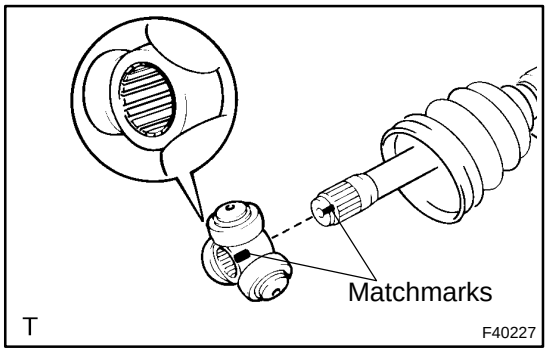

(c) Align the matchmarks, install tripod joint assy to the outboard joint assy.
(d) Using a brass bar and hammer, install the tripod joint assy.

NOTICE:
- **Do not tap the roller.**
- **Be sure to install the tripod joint in the correct orientation.**

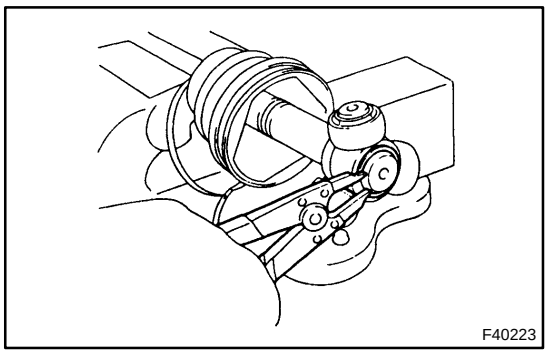

(e) Using a snap ring expander, install a new inner LH shaft snap ring.

(f) Pack the inboard joint sub–assy LH with grease.
Grease capacity: 135 – 155 g (4.8 – 5.5 oz.)

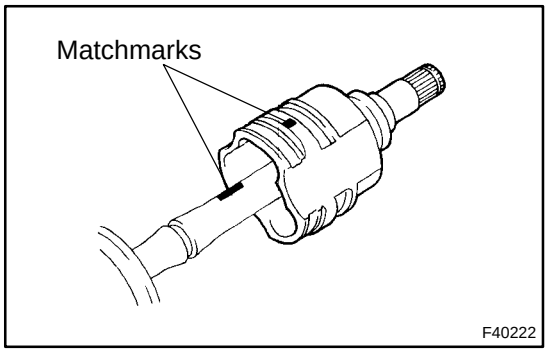

(g) Align the matchmarks, install the inboard joint sub–assy LH to the outboard joint shaft assy.

40. INSTALL INBOARD JOINT BOOT

(a) Install the inboard joint boot to the inboard joint assy and outboard joint shaft assy.

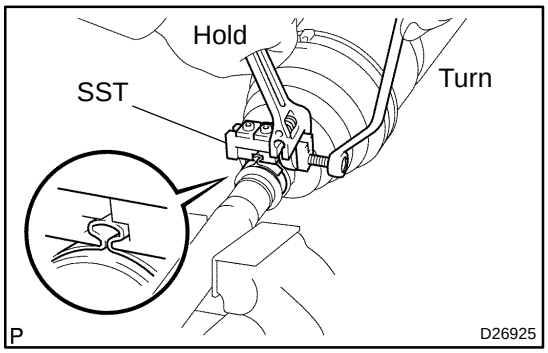

41. INSTALL FRONT AXLE INBOARD JOINT BOOT LH CLAMP (2WD DRIVE TYPE)

(a) Mount drive shaft in a soft vise.

(b) Secure the clamp onto the boot.

(c) Place SST onto the clamp.
SST 09521–24010

(d) Tighten the SST so that the clamp is pinched.

NOTICE:
Do not overtighten the SST.

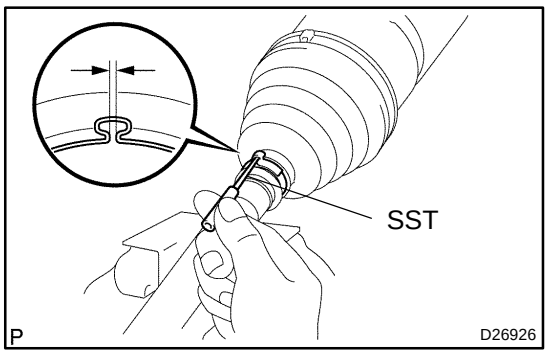

(e) Using SST, measure the clearance of the clamp.
SST 09240–00020 (09242–00150)
Clearance: 1.5 mm (0.059 in.) or less.

NOTICE:
When the measured value exceeds the specified value, re-tighten the clamp.

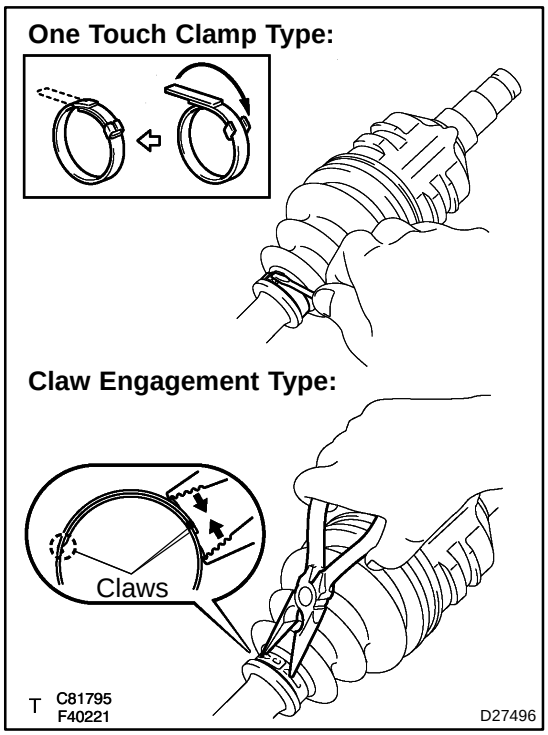

42. INSTALL FRONT AXLE INBOARD JOINT BOOT LH CLAMP (4WD DRIVE TYPE)

(a) One Touch Clamp Type:
Using a screwdriver, install the inboard joint boot LH clamp as shown in the illustration.

(b) Claw Engagement Type:
Using a needle nose pliers, install the inboard joint boot LH clamp as shown in the illustration.

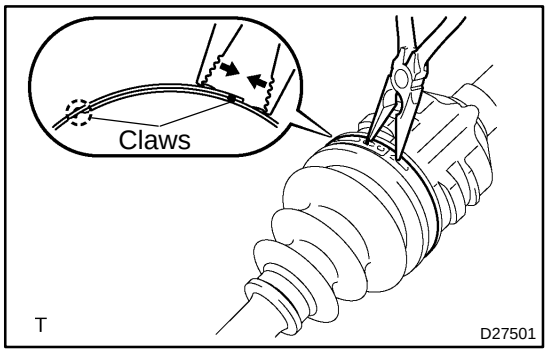

43. INSTALL FRONT AXLE INBOARD JOINT BOOT LH NO.2 CLAMP (2WD DRIVE TYPE)

(a) Using a needle nose pliers, install the inboard joint boot LH No.2 clamp as shown in the illustration.

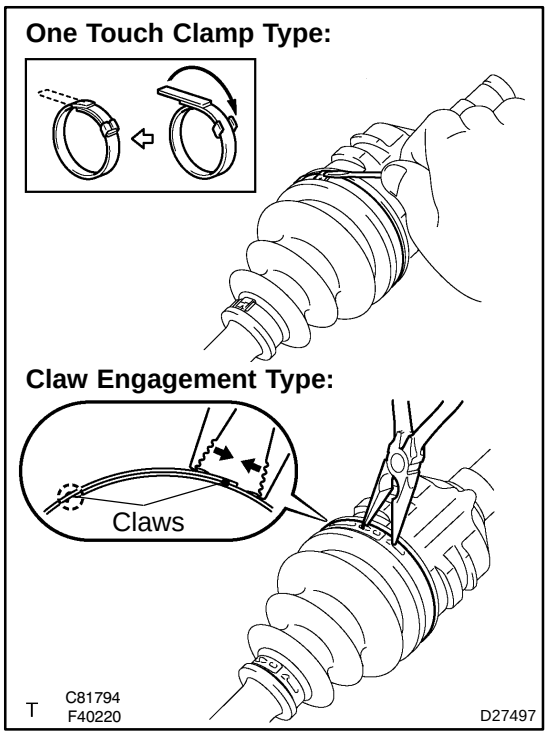

44. INSTALL FRONT AXLE INBOARD JOINT BOOT LH NO.2 CLAMP (4WD DRIVE TYPE)

(a) One Touch Clamp Type:
Using a screwdriver, install the inboard joint boot LH No.2 clamp as shown in the illustration.

(b) Claw Engagement Type:
Using a needle nose pliers, install the inboard joint boot LH No.2 clamp as shown in the illustration.

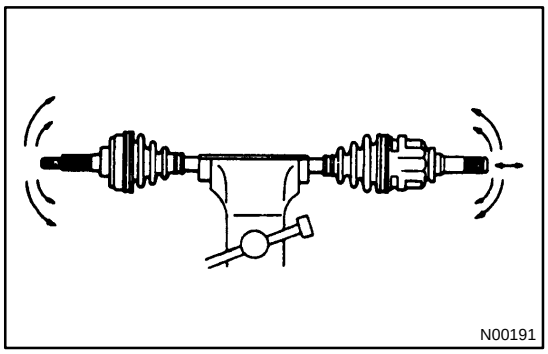
N00191

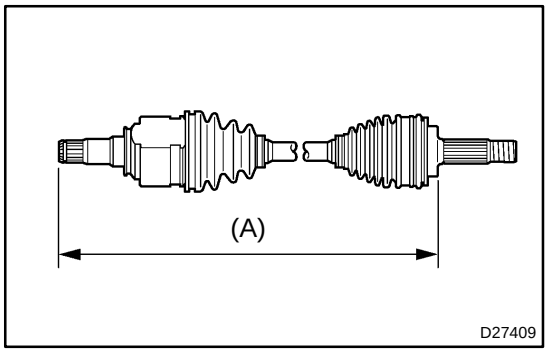

D27409

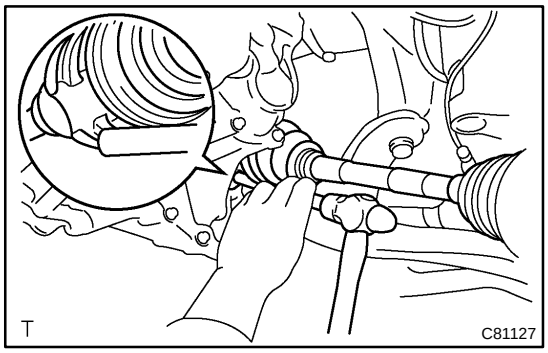
T C81127

45. INSPECT FRONT DRIVE SHAFT ASSY LH

(a) Check that there is no remarkable play in the outboard joint.

(b) Check that the inboard joint slides smoothly in the thrust direction.

(c) Check that there is no remarkable play in the radial direction of the inboard joint.

(d) Check the boots for damage.

NOTICE:

Keep the drive shaft assy level during inspection.

HINT:

For dimension (A), refer to the following table.

2WD:

RH	848.3 ± 5.0 mm (33.398 ± 0.197 in.)
LH	582.3 ± 5.0 mm (22.925 ± 0.197 in.)

4WD:

RH	860.0 ± 5.0 mm (33.858 ± 0.197 in.)
LH	571.9 ± 5.0 mm (22.516 ± 0.197 in.)

46. INSTALL FRONT DRIVE SHAFT ASSY LH

(a) A/T:

Coat the spline of the inboard joint shaft assy with ATF.

(b) M/T:

Coat the spline of the inboard joint shaft assy with gear oil.

(c) Align the shaft splines, install the drive shaft assy LH with brass bar and a hammer.

NOTICE:

- **Set the hole snap ring with opening side facing downwards.**
- **Be careful not to damage the dust cover, boot and oil seal.**

HINT:

Whether the inboard joint shaft is in contact with the pinion shaft or not can be known from the sound or feeling when driving it in.

47. INSTALL FRONT DRIVE SHAFT ASSY RH (2WD DRIVE TYPE)

HINT:

Install the RH side by the same procedure as the LH side.

NOTICE:

- **Set the hole snap ring with opening side facing downwards.**
- **Be careful not to damage the dust cover, boot and oil seal.**

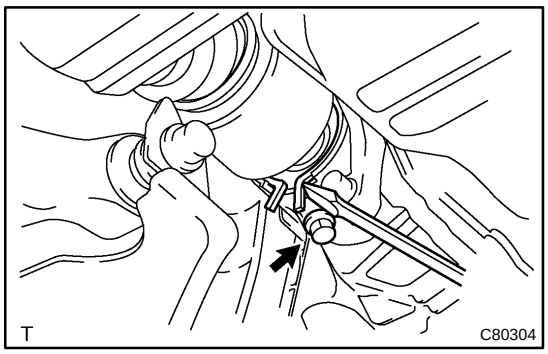

48. INSTALL FRONT DRIVE SHAFT ASSY RH (4WD DRIVE TYPE)

(a) Coat the spline of the inboard joint shaft assy with ATF.

(b) Align the shaft splines, install the drive shaft assy.

NOTICE:

Be careful not to damage the boot and oil seal.

(c) Using a screwdriver, install a new bearing bracket hole snap ring to the bearing bracket.

(d) Install a new bearing lock bolt to the bearing bracket.
Torque: 32.4 N·m (330 kgf·cm, 24 ft·lbf)

49. INSTALL FRONT AXLE ASSY LH

(a) Install the drive shaft assy LH to the front axle assy LH.

NOTICE:

- **Be careful not to damage the outboard joint boot.**
- **w/ ABS:**
  Be careful not to damage the speed sensor rotor.

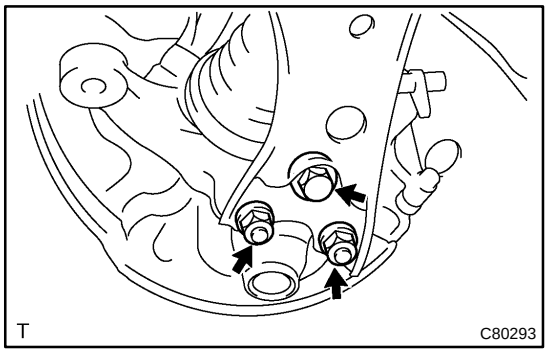

50. INSTALL FRONT SUSPENSION ARM SUB–ASSY LOWER NO.1 LH

(a) Install the lower ball joint to the front suspension arm sub–assy lower No.1 LH with the bolt and 2 nuts.
Torque: 89 N·m (908 kgf·cm, 66 ft·lbf)

51. INSTALL TIE ROD END SUB–ASSY LH

(a) Install the tie rod end sub–assy LH to the steering knuckle with the nut.
Torque: 49 N·m (500 kgf·cm, 36 ft·lbf)

(b) Install a new cotter pin.

NOTICE:

If the holes for the cotter pin are not aligned, tighten the nut further to 60°.

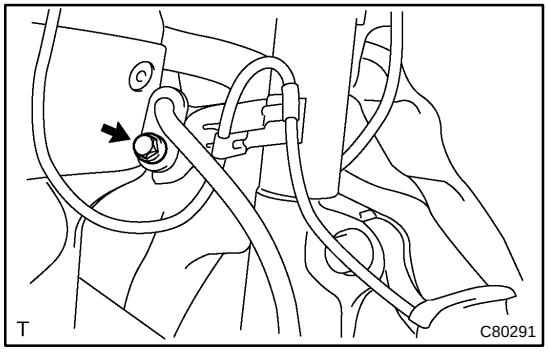

52. INSTALL SPEED SENSOR FRONT LH (W/ ABS)

(a) Install the speed sensor front LH and flexible hose to shock absorber assy front LH with the bolt.
Torque: 29 N·m (296 kgf·cm, 21 ft·lbf)

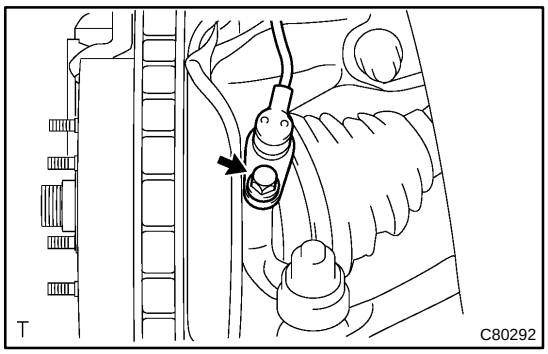

(b) Install the speed sensor front LH to the steering knuckle with the bolt.
Torque: 8.0 N·m (82 kgf·cm, 71 ft·lbf)

NOTICE:

- **Be careful not to damage the speed sensor.**
- **Keep the speed sensor clean.**
- **Do not twist the sensor wire when installing the sensor.**

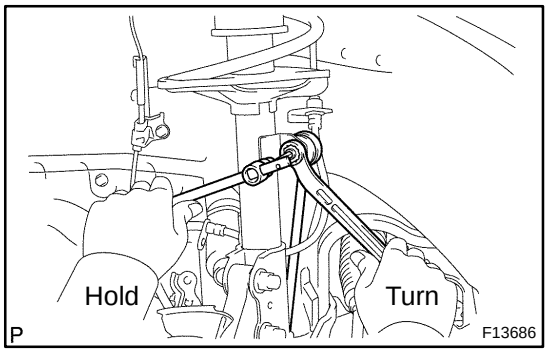

53. INSTALL FRONT STABILIZER LINK ASSY LH

(a) Install the front stabilizer link assy LH with the nut.
Torque: 74 N·m (755 kgf·cm, 55 ft·lbf)

HINT:

If the ball joint turns together with the nut, use a hexagon wrench (6 mm) to hold the stud.

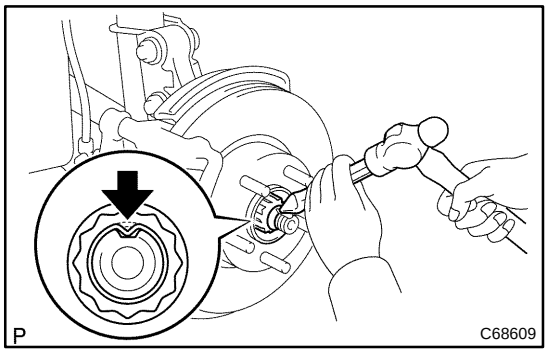

54. INSTALL FRONT AXLE HUB LH NUT

(a) Install a new hub LH nut.
Torque: 216 N·m (2,200 kgf·cm, 159 ft·lbf)

(b) Using a chisel and a hammer, stake the hub LH nut.

55. INSTALL FRONT WHEEL
Torque: 103 N·m (1,050 kgf·cm, 76 ft·lbf)

56. ADD MANUAL TRANSAXLE OIL (M/T TRANSAXLE)

57. INSPECT AND ADJUST MANUAL TRANSAXLE OIL (M/T TRANSAXLE) (See page 41–2)

58. ADD AUTOMATIC TRANSAXLE FLUID (A/T TRANSAXLE)

59. INSPECT AND ADJUST AUTOMATIC TRANSAXLE FLUID (A/T TRANSAXLE) (See page 40–2)

60. ADD TRANSFER OIL (4WD DRIVE TYPE)

HINT:

Perform the procedure only when installing the RH side.

61. INSPECT AND ADJUST TRANSFER OIL (4WD DRIVE TYPE) (See page 31–3)

HINT:

Perform the procedure only when installing the RH side.

62. INSPECT AND ADJUST FRONT WHEEL ALIGNMENT (See page 26–6)

63. CHECK ABS SPEED SENSOR SIGNAL (W/ ABS) (See page 05–316)

TRANSFER CASE OIL SEAL (U341F)

3102F–01

REPLACEMENT

1. REMOVE ENGINE ASSEMBLY WITH TRANSAXLE (See page 14–30)
2. SEPARATE VANE PUMP ASSY (See page 14–30)
3. REMOVE RACK & PINION POWER STEERING GEAR ASSY (See page 51–22)
4. REMOVE FRONT SUSPENSION CROSSMEMBER W/CENTER MEMBER (See page 14–30)
5. REMOVE MANIFOLD STAY (See page 14–30)
6. REMOVE OXYGEN SENSOR (See page 14–30)
7. REMOVE EXHAUST MANIFOLD HEAT INSULATOR NO.1 (See page 14–30)
8. REMOVE EXHAUST MANIFOLD (See page 14–30)
9. REMOVE FRONT DRIVE SHAFT ASSY RH (See page 30–15)
10. REMOVE TRANSVERSE ENGINE ENGINE MOUNTING BRACKET (See page 14–30)
11. REMOVE TRANSFER STIFFENER PLATE CENTER (See page 14–30)
12. REMOVE TRANSFER STIFFENER PLATE RH (See page 14–30)
13. REMOVE TRANSFER ASSY (See page 31–11)

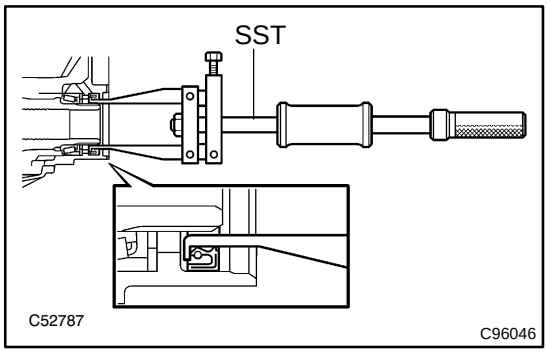

14. REMOVE TRANSFER CASE OIL SEAL

(a) Using SST, remove the oil seal from the case.
SST 09308–00010

NOTICE:

Do not damage the oil–seal fitted surface of the case.

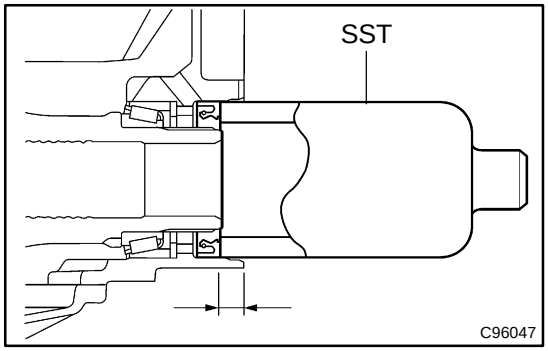

15. INSTALL TRANSFER CASE OIL SEAL

(a) Using SST, drive a new oil seal into the case to the position shown in the illustration.
SST 09316–60011 (09316–00011)
Drive in depth: 9.7 – 10.3 mm (0.3819 – 0.4055 in.)

NOTICE:

Do not install the oil seal obliquely.

(b) Apply small amount of MP grease to the lip of the oil seal.

16. INSTALL TRANSFER ASSY (See page 31–11)
17. INSTALL TRANSFER STIFFENER PLATE RH (See page 31–11)
18. INSTALL TRANSFER STIFFENER PLATE CENTER (See page 31–11)
19. INSTALL TRANSVERSE ENGINE ENGINE MOUNTING BRACKET (See page 14–30)
20. INSTALL FRONT DRIVE SHAFT ASSY RH (See page 30–15)
21. INSTALL EXHAUST MANIFOLD (See page 14–30)
22. INSTALL EXHAUST MANIFOLD HEAT INSULATOR NO.1 (See page 14–30)
23. INSTALL OXYGEN SENSOR (See page 14–30)
24. INSTALL MANIFOLD STAY (See page 14–30)
25. INSTALL FRONT SUSPENSION CROSSMEMBER W/CENTER MEMBER (See page 14–30)

26. INSTALL RACK & PINION POWER STEERING GEAR ASSY (See page 14–30)
SST 09023–38200
27. INSTALL VANE PUMP ASSY (See page 14–30)
28. INSTALL ENGINE ASSEMBLY WITH TRANSAXLE (See page 14–30)
SST 09670–00010
29. ADD TRANSFER OIL (See page 31–3)
30. ADD AUTOMATIC TRANSAXLE FLUID (See page 40–2)
31. ADD ENGINE OIL
32. ADD COOLANT (See page 16–6)
33. CHECK ENGINE OIL LEAK
34. CHECK ENGINE COOLANT LEAK
35. CHECK FUEL LEAK
36. CHECK EXHAUST GAS LEAK
37. CHECK IDLE SPEED AND IGNITION TIMING (See page 14–1)
SST 09843–18030, 09843–18040
38. INSPECT CO/HC (See page 14–1)
39. INSPECT AND ADJUST FRONT WHEEL ALIGNMENT (See page 26–6)
40. CHECK ABS SPEED SENSOR SIGNAL (See page 05–316)

TRANSFER ASSY (U341F)

COMPONENTS

3102H–01

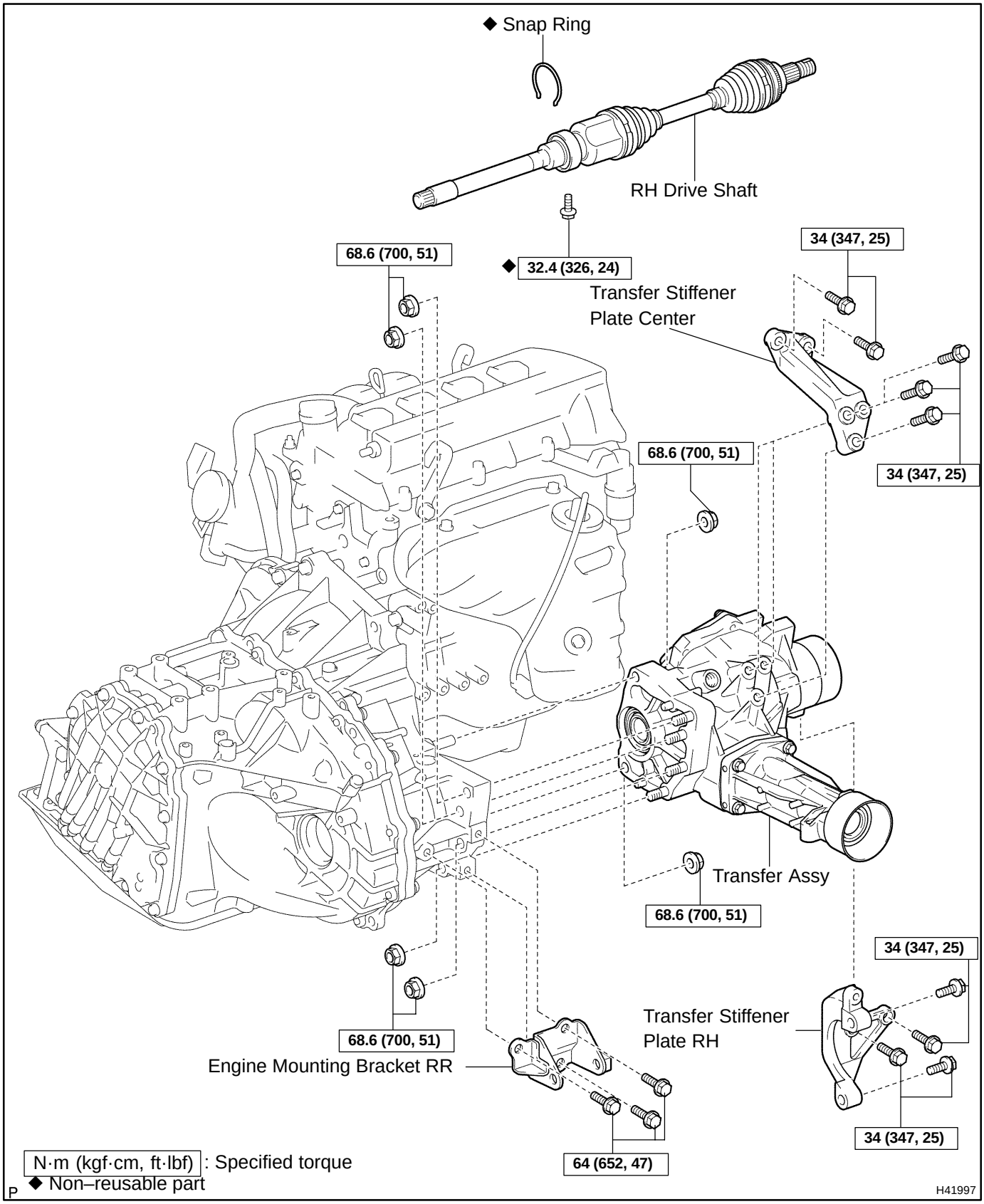

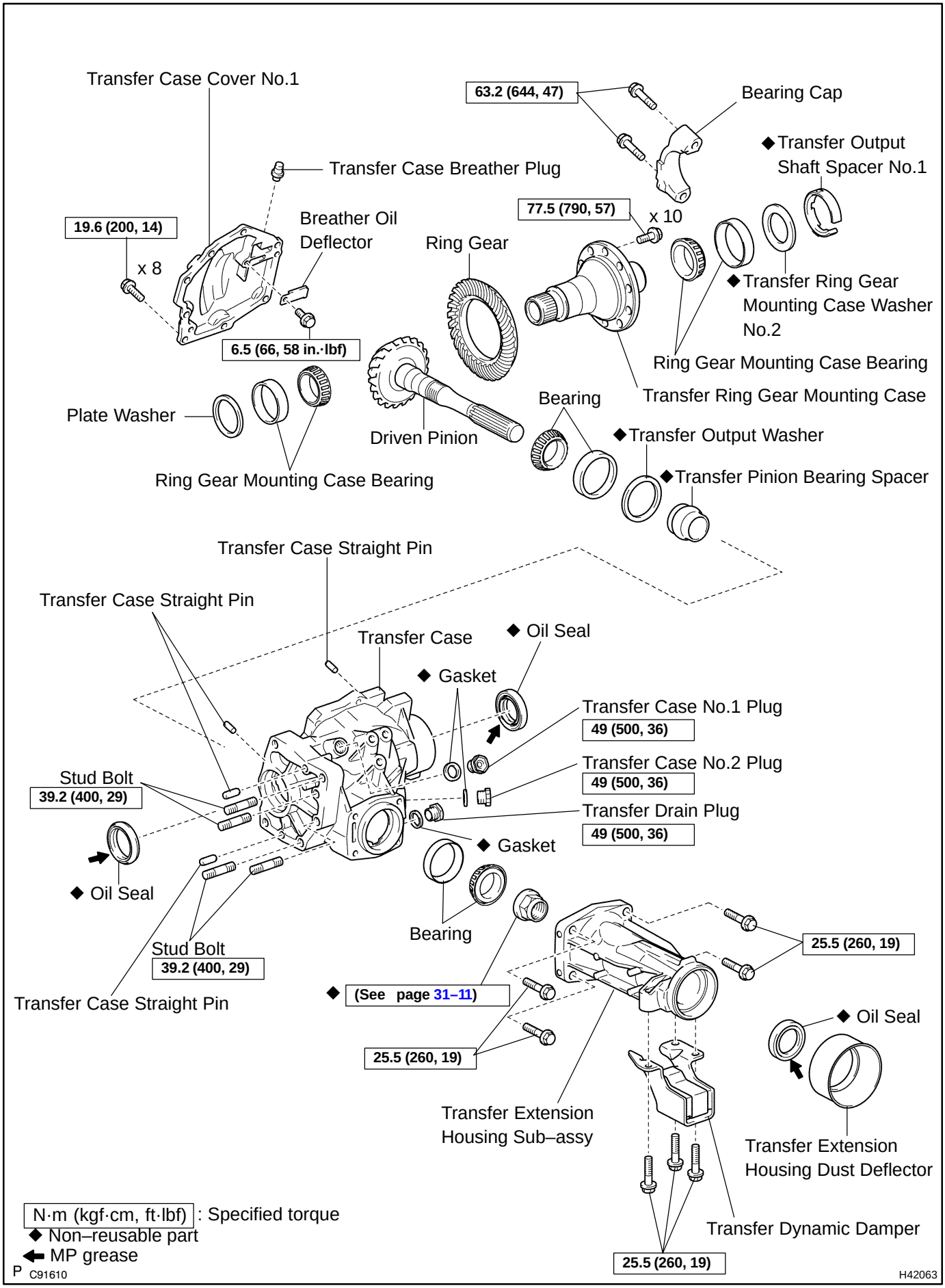
Transfer Case Cover No.1
63.2 (644, 47)
Bearing Cap
◆Transfer Output Shaft Spacer No.1
Transfer Case Breather Plug
19.6 (200, 14)
x 8
Breather Oil Deflector
6.5 (66, 58 in.·lbf)
77.5 (790, 57)
x 10
Ring Gear
◆Transfer Ring Gear Mounting Case Washer No.2
Ring Gear Mounting Case Bearing
Transfer Ring Gear Mounting Case
Plate Washer
Driven Pinion
Bearing
◆Transfer Output Washer
Ring Gear Mounting Case Bearing
◆Transfer Pinion Bearing Spacer
Transfer Case Straight Pin
Transfer Case Straight Pin
Transfer Case
◆ Oil Seal
◆ Gasket
Transfer Case No.1 Plug
49 (500, 36)
Transfer Case No.2 Plug
49 (500, 36)
Transfer Drain Plug
49 (500, 36)
Stud Bolt
39.2 (400, 29)
◆ Gasket
◆ Oil Seal
Bearing
Stud Bolt
39.2 (400, 29)
Transfer Case Straight Pin
◆ (See page 31–11)
25.5 (260, 19)
25.5 (260, 19)
◆ Oil Seal
Transfer Extension Housing Sub–assy
Transfer Extension Housing Dust Deflector
Transfer Dynamic Damper
25.5 (260, 19)
N·m (kgf·cm, ft·lbf) : Specified torque
◆ Non–reusable part
MP grease
P C91610
H42063

3102I–01

OVERHAUL

1. **REMOVE ENGINE ASSEMBLY WITH TRANSAXLE (See page 14–30)**
2. **SEPARATE VANE PUMP ASSY (See page 14–30)**
3. **REMOVE RACK & PINION POWER STEERING GEAR ASSY (See page 14–30)**
4. **REMOVE FRONT SUSPENSION CROSSMEMBER W/CENTER MEMBER (See page 14–30)**
5. **REMOVE MANIFOLD STAY (See page 14–30)**
6. **REMOVE OXYGEN SENSOR (See page 14–30)**
7. **REMOVE EXHAUST MANIFOLD HEAT INSULATOR NO.1 (See page 14–30)**
8. **REMOVE EXHAUST MANIFOLD (See page 14–30)**
9. **REMOVE STARTER ASSY (See page 14–30)**
10. **REMOVE FRONT DRIVE SHAFT ASSY RH (See page 30–15)**

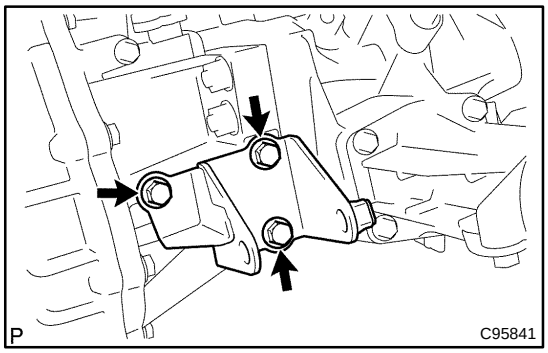

11. REMOVE TRANSVERSE ENGINE ENGINE MOUNTING BRACKET

(a) Remove the 3 bolts and engine mounting bracket.

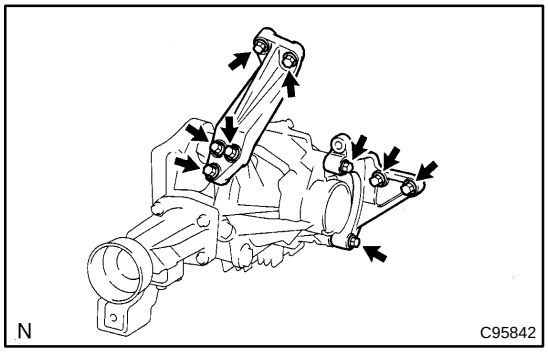

12. REMOVE TRANSFER STIFFENER PLATE CENTER

(a) Remove the 5 bolts and stiffener plate center.

13. REMOVE TRANSFER STIFFENER PLATE RH

(a) Remove the 4 bolts and stiffener plate RH.

14. REMOVE TRANSFER ASSY

(a) Remove the 6 nuts.

(b) Using a plastic hammer, remove the transfer assy from the transaxle assy.

NOTICE:

- **Remove the transfer assy horizontally from the transaxle assy.**
- **When removing, do not touch the both sides of oil seal part of transfer assy.**

15. REMOVE TRANSFER & TRANSAXLE SETTING STUD BOLT

(a) Remove the 4 stud bolts.

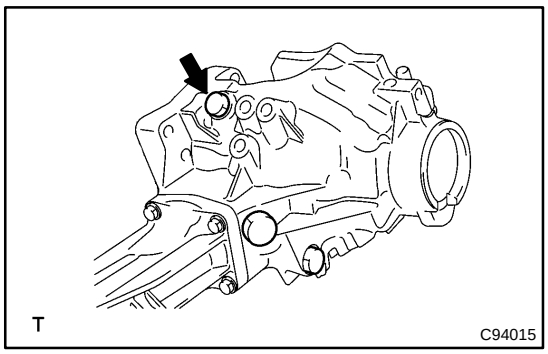

16. REMOVE TRANSFER CASE NO.1 PLUG

(a) Remove the transfer case No.1 plug.

(b) Remove the gasket from the transfer case No.1 plug.

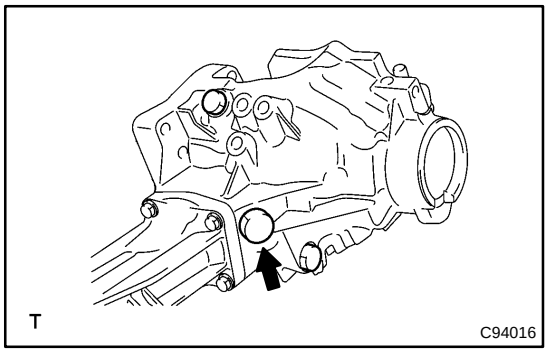

17. REMOVE TRANSFER CASE NO.2 PLUG

(a) Remove the transfer case No.2 plug.

(b) Remove the gasket from the transfer case No.2 plug.

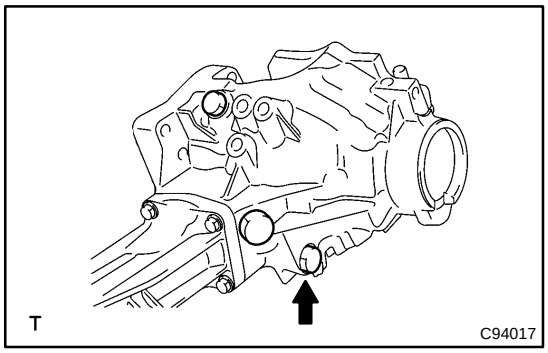

18. REMOVE TRANSFER DRAIN PLUG

(a) Remove the transfer drain plug.

(b) Remove the gasket from the transfer drain plug.

19. REMOVE TRANSFER CASE BREATHER PLUG

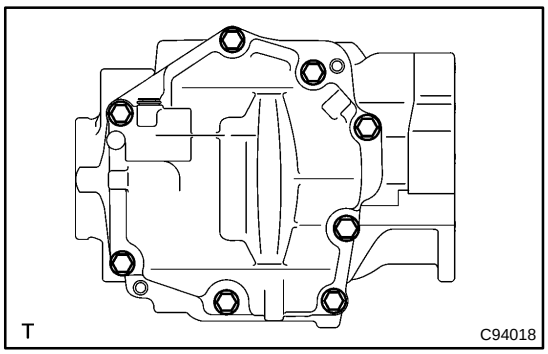

20. REMOVE TRANSFER CASE COVER NO.1

(a) Remove the 8 bolts.

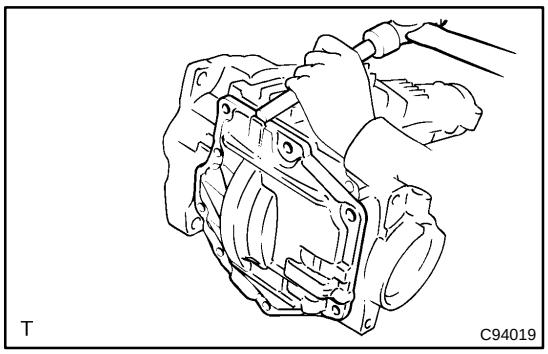

(b) Using a brass bar and a hammer, remove the transfer case cover No.1 from the case.

NOTICE:

Place the brass bar on the rib part of the case.

(c) Remove the bolt and breather oil deflector.

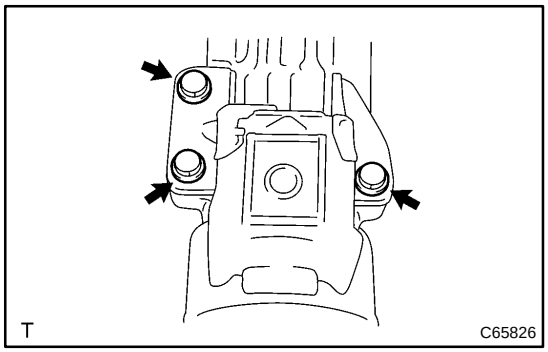

21. REMOVE TRANSFER DYNAMIC DAMPER

(a) Remove the 3 bolts and transfer dynamic damper from the extension housing.

22. REMOVE TRANSFER CASE STRAIGHT PIN

(a) Remove the 4 transfer case straight pins from the transfer case.

23. FIX TRANSFER ASSY

(a) Attach the transfer assy to the overhaul attachment.

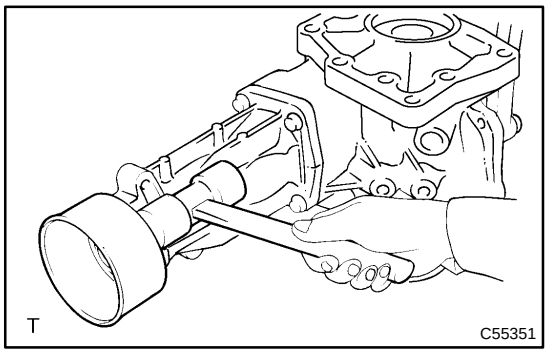

24. REMOVE TRANSFER EXTENSION HOUSING DUST DEFLECTOR

(a) Using a plastic hammer, remove the transfer extension housing dust deflector from the extension housing.

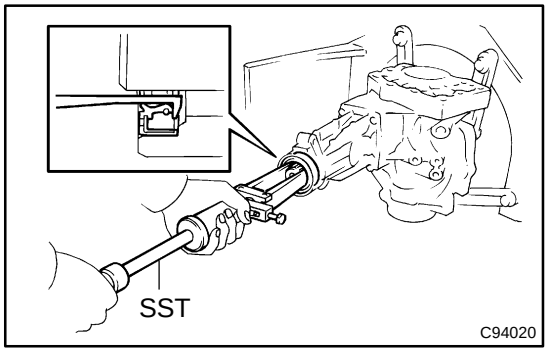

25. REMOVE TRANSFER EXTENSION HOUSING TYPE T OIL SEAL

(a) Using SST, remove the oil seal from the extension housing.

SST 09308–00010

NOTICE:

Be careful of not damaging the oil seal press in face of housing and the inner diameter of bush.

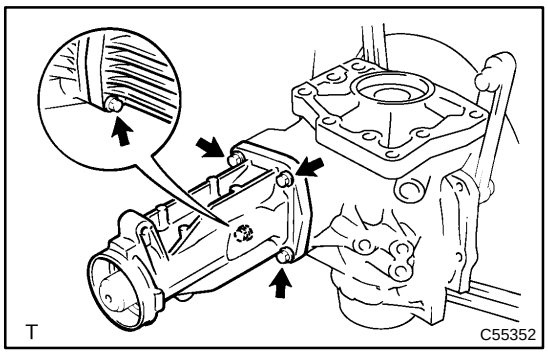

26. REMOVE TRANSFER EXTENSION HOUSING SUB–ASSY

(a) Remove the 4 bolts.

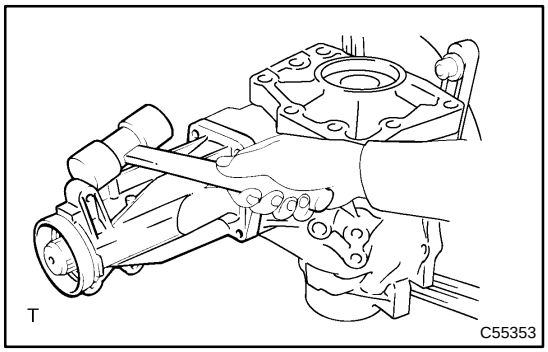

(b) Using a plastic hammer, remove the extension housing sub–assy from the case.

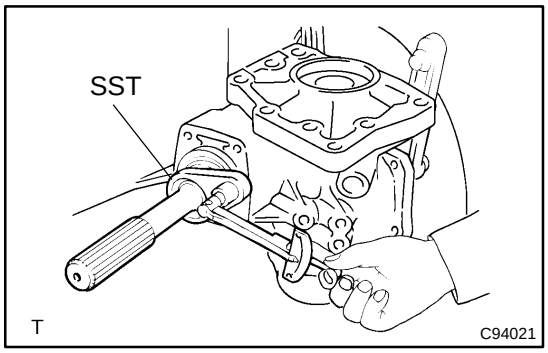

27. INSPECT PRELOAD

(a) Using SST and a torque wrench, measure the preload of the backlash between the drive pinion and ring gear.
SST 09326–20011
Preload (at starting):
0.32 – 0.57 N·m (3 – 6 kgf·cm, 2.8 – 5.0 in.·lbf)

(b) Using SST and a torque wrench, measure the total preload.
SST 09326–20011
Preload (at starting):
0.53 – 0.94 N·m (5 – 10 kgf·cm, 4.7 – 8.3 in.·lbf)

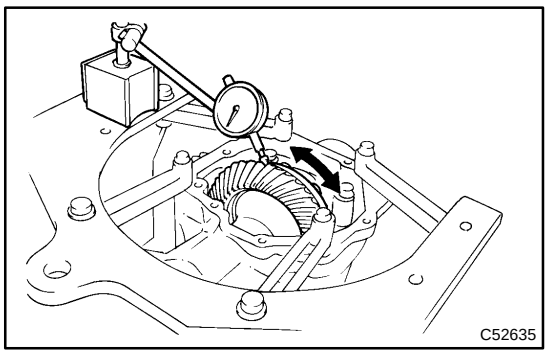

28. INSPECT BACKLASH

(a) Using a dial indicator, check the backlash of the ring gear.
Backlash: 0.10 – 0.15 mm (0.0039 – 0.0059 in.)

If the backlash is not within the specification, adjust the side bearing preload or repair as necessary.

NOTICE:

Check at least 3 positions on the circumference of the ring gear.

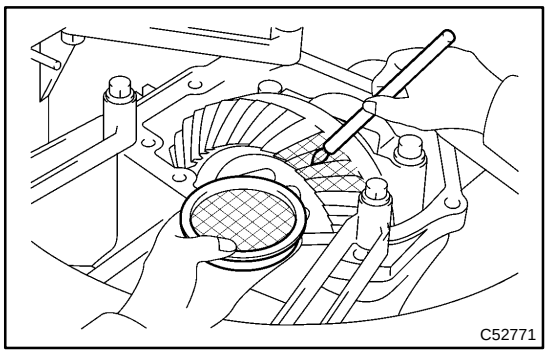

29. INSPECT TOOTH CONTACT BETWEEN RING GEAR AND DRIVEN PINION

(a) Coat 3 or 4 teeth at 4 different positions on the ring gear with red lead.

(b) Rotate the ring gear inspect the tooth pattern.

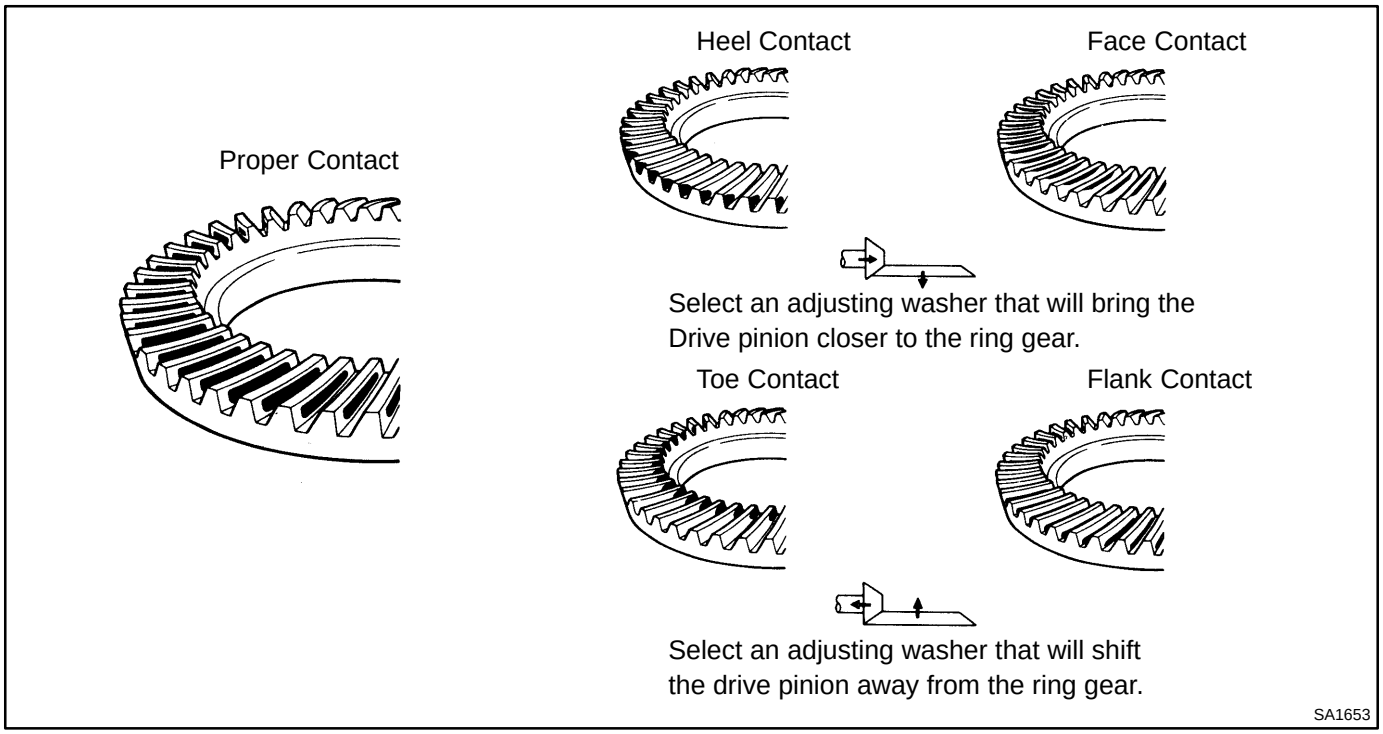

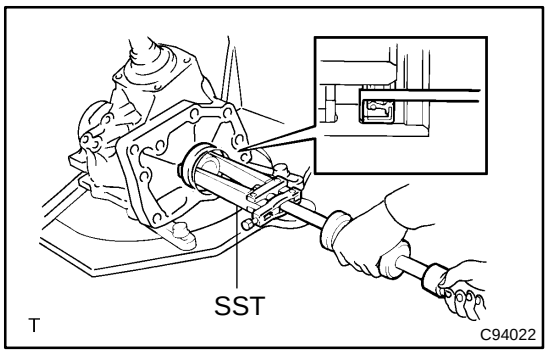

30. REMOVE TRANSFER CASE OIL SEAL

(a) Using SST, remove the oil seal from the case.
SST 09308–00010

NOTICE:

Do not damage the oil seal press in face of case.

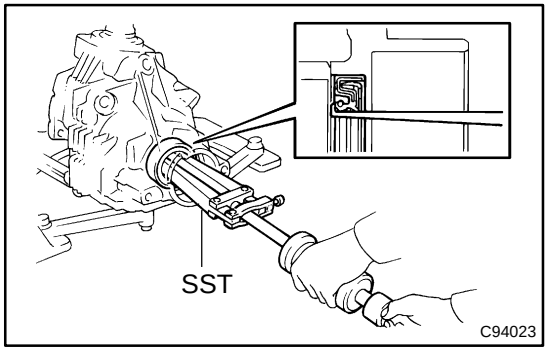

31. REMOVE TRANSFER CASE RH OIL SEAL

(a) Using SST, remove the oil seal from the case.
SST 09308–00010

NOTICE:

Do not damage the oil seal press in face of case.

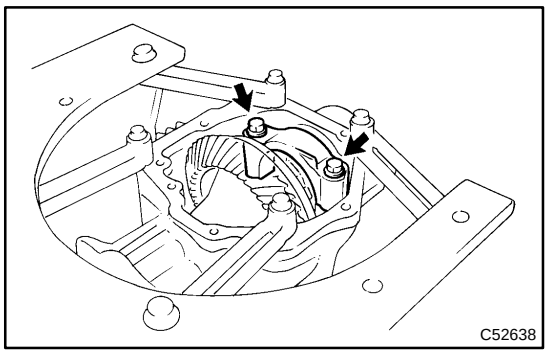

32. REMOVE BEARING CAP

(a) Remove the 2 bolts and the bearing cap.

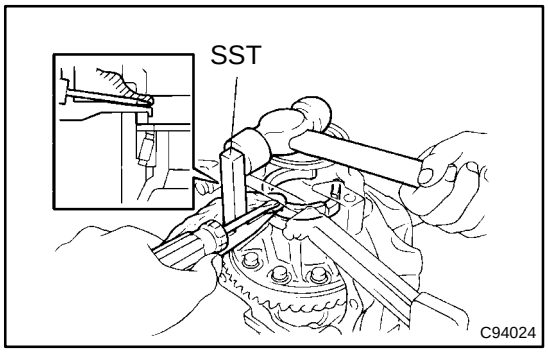

33. REMOVE TRANSFER OUTPUT SHAFT SPACER NO.1

(a) Using SST, a screwdriver and a hammer, remove the transfer output shaft spacer No.1.
SST 09504–22011

NOTICE:
Protect with waste for not damaging the case.

34. REMOVE TRANSFER RING GEAR MOUNTING CASE WASHER NO.2

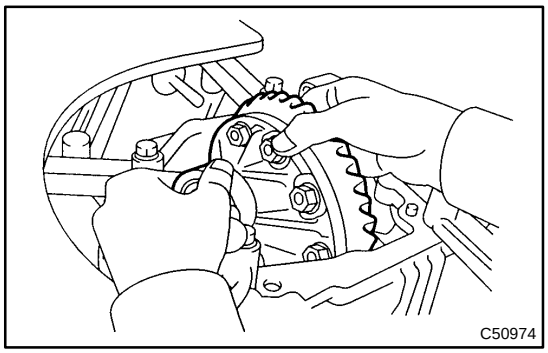

35. REMOVE TRANSFER RING GEAR MOUNTING CASE

(a) Remove the transfer ring gear mounting case from the transfer assy.

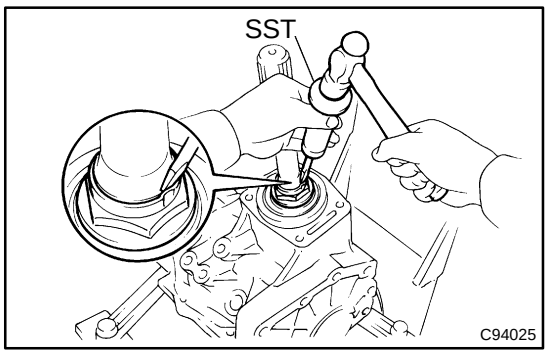

36. REMOVE DRIVEN PINION

(a) Using SST and a hammer, unstake the gear nut.
SST 09930–00010

HINT:

- Using SST with the flat side facing outward.
- Do not machine the tip of SST with a grinder, etc.

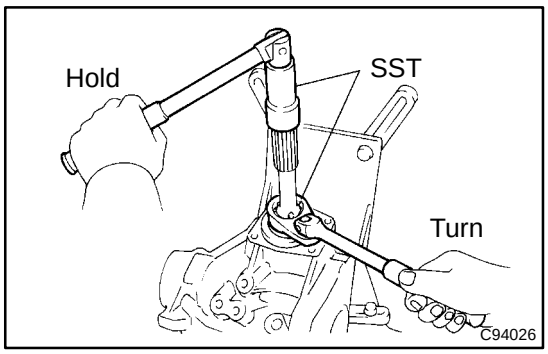

(b) Using SST, remove the gear nut.
SST 09326–20011, 09556–16030

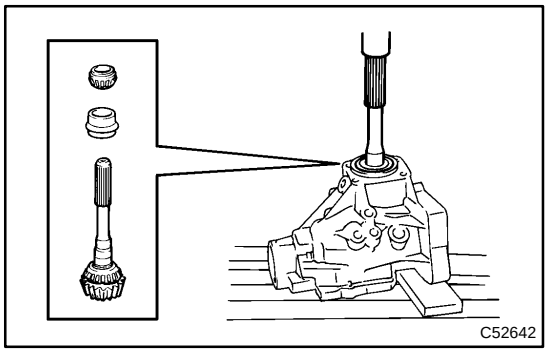

(c) Using a press, remove the driven pinion, transfer driven pinion bearing rear inner race and transfer pinion bearing spacer.

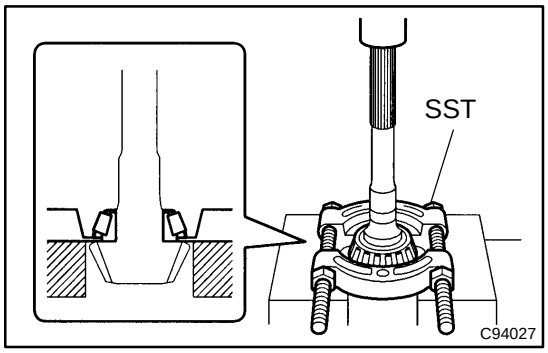

37. REMOVE BEARING (FOR TRANSFER DRIVEN PINION FRONT)

(a) Using SST and a press, remove the transfer driven pinion bearing front inner race.
SST 09950–00020

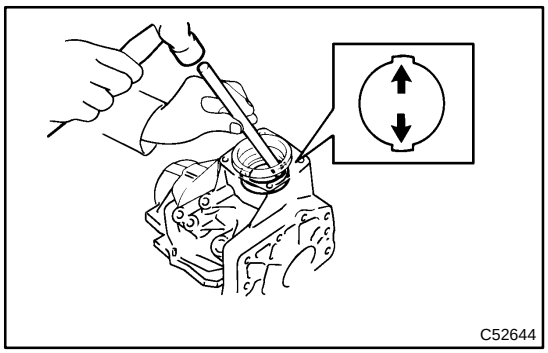

(b) Using a brass bar and a hammer, tap the driven pinion bearing front outer race to remove from the case.

NOTICE:
Place the brass bar at the 2 positions of the cutouts on the case.

38. REMOVE TRANSFER OUTPUT WASHER

39. REMOVE RING GEAR MOUNTING CASE BEARING

(a) Remove the ring gear mounting case bearing RH outer race from the ring gear mounting case assy.

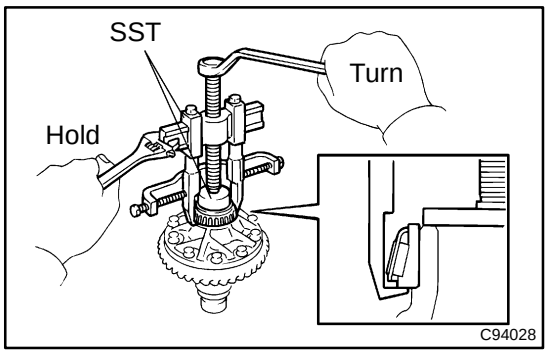

(b) Using SST, remove the ring gear mounting case bearing RH inner race from the ring gear mounting case assy.
SST 09950–40011 (09951–04010, 09952–04010, 09953–04020, 09954–04010, 09955–04061, 09957–04010, 09958–04011), 09950–60010 (09951–00400, 09951–00450)

NOTICE:
Using SST (09953–04020) with its screw and tip applied to grease.

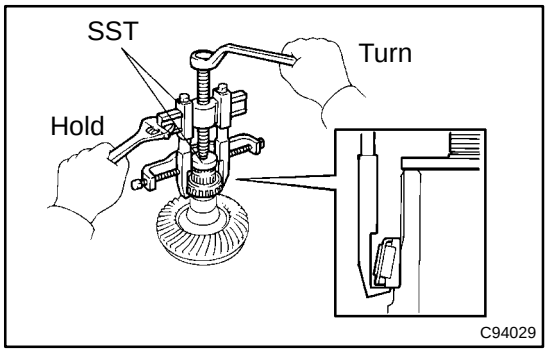

(c) Using SST, remove the ring gear mounting RH inner race from the ring gear mounting case assy.
SST 09950–40011 (09951–04010, 09952–04010, 09953–04020, 09954–04010, 09955–04061, 09957–04010, 09958–04011), 09950–60010 (09951–00400, 09951–00450)

NOTICE:
Using SST (09953–04020) with its screw and tip applied to grease.

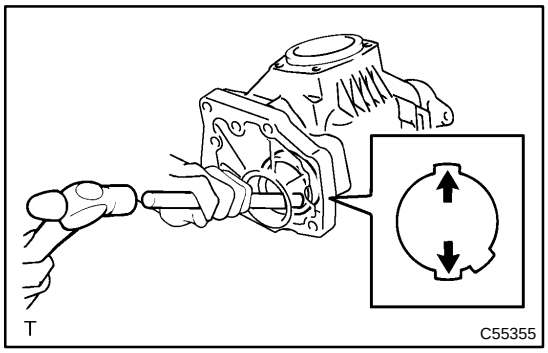

(d) Using a brass bar and a hammer, tap the 2 positions of the ring gear mounting case bearing LH outer race to remove from the case.

NOTICE:
Place the brass bar at the 2 positions of the cutouts on the case.

(e) Remove the case washer.

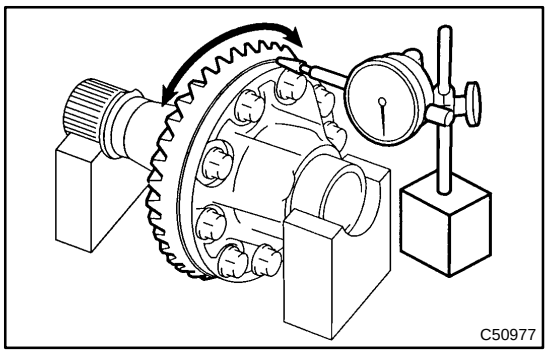

40. INSPECT RUNOUT OF RING GEAR

(a) Place the ring gear mounting case assy on the V–block.
(b) Using a dial indicator, check the runout of the ring gear.
Maximum runout: 0.06 mm (0.0024 in.)

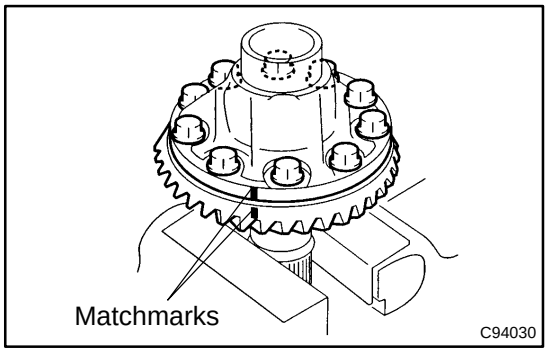

41. REMOVE RING GEAR

(a) Make matchmarks on the ring gear mounting case and the ring gear.
(b) Remove the 10 bolts.

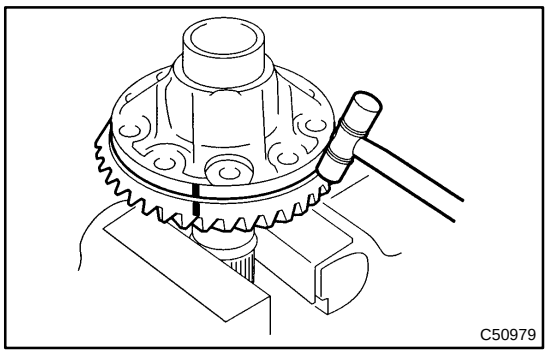

(c) Using a plastic hammer, tap on the ring gear to separate it from the ring gear mounting case.

NOTICE:

Do not damage the tooth face of the ring gear.

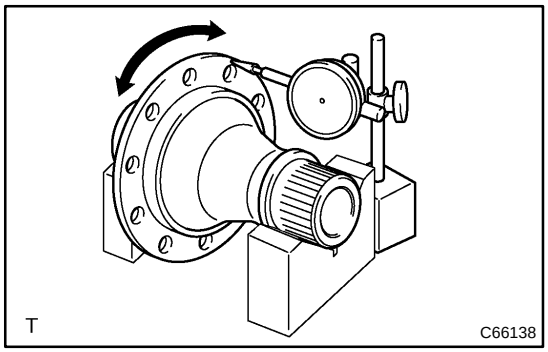

42. INSPECT RUNOUT OF TRANSFER RING GEAR MOUNTING CASE

(a) Place the ring gear mounting case assy on the V–block.

(b) Using a dial indicator, check the runout of the ring gear.

Maximum runout: 0.14 mm (0.0055 in.)

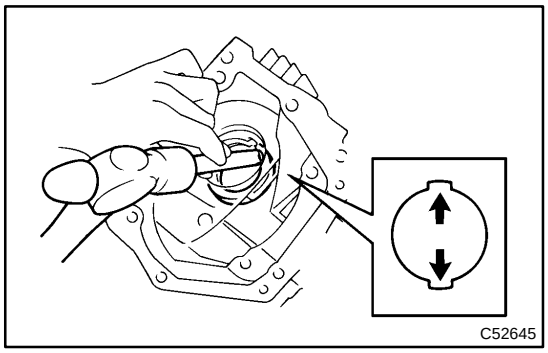

43. REMOVE BEARING (FOR TRANSFER DRIVEN PINION REAR)

(a) Using a brass bar and a hammer, tap the 2 positions on the driven pinion bearing rear outer race before removing from the case.

NOTICE:

Place the brass bar at the 2 positions of the cutouts on the case.

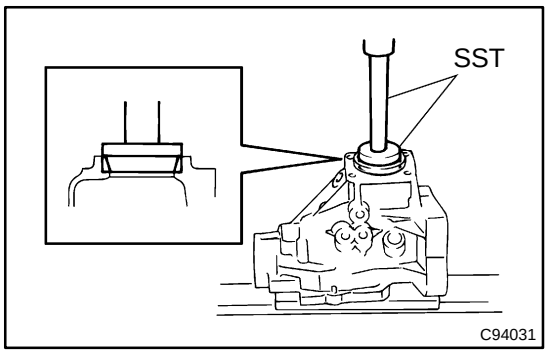

44. INSTALL BEARING (FOR TRANSFER DRIVEN PINION REAR)

(a) Using SST and a press, press the driven pinion bearing rear outer race into the case.

SST 09950–60010 (09951–00620), 09950–70010 (09951–07150)

NOTICE:

Keep the transfer case horizontally using tip of wood, etc..

(b) Apply gear oil to the driven pinion bearing rear outer race.

45. INSTALL TRANSFER OUTPUT WASHER

(a) Install a washer to the case.

HINT:

Install the same washer as the previous one.

(b) Apply gear oil to the washer.

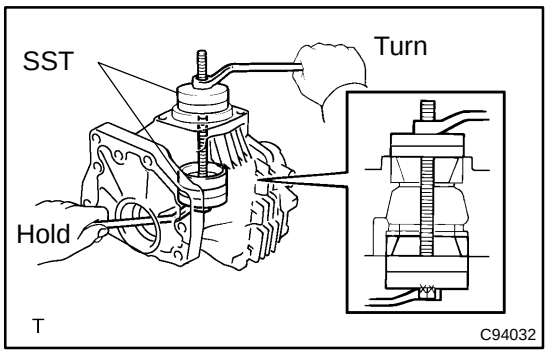

46. INSTALL BEARING (FOR TRANSFER DRIVEN PINION FRONT)

(a) Apply gear oil to the inner surface of the transfer case.

(b) Using SST, install the driven pinion bearing front outer race to the case with a bolt and a nut.

SST 09950–60010 (09951–00610, 09951–00620, 09951–00650), 09950–60020 (09951–00680)

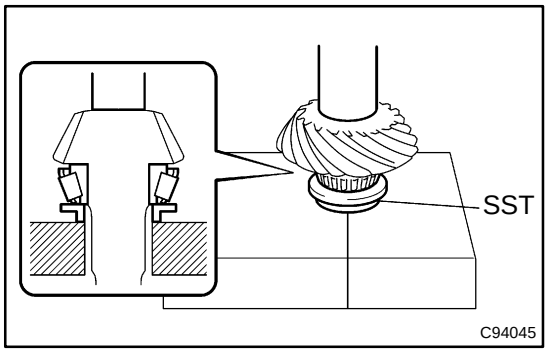

(c) Using SST and a press, press the driven pinion bearing front inner race into the driven pinion.

SST 09506–30012

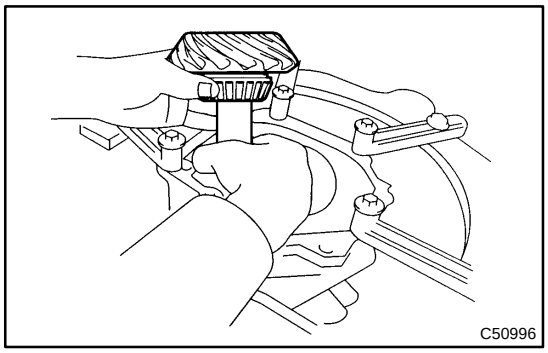

47. INSTALL DRIVEN PINION

(a) Install the driven pinion to the case.

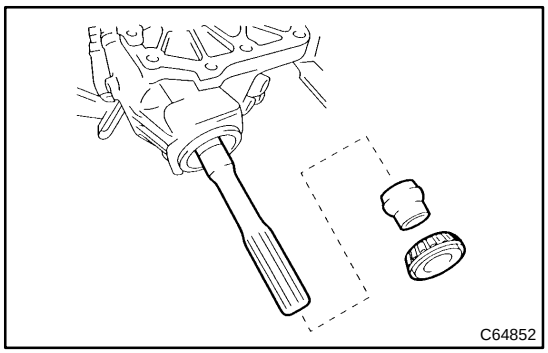

(b) Install a new pinion bearing spacer and driven pinion bearing rear inner race to the driven pinion.

HINT:

Install the pinion bearing spacer with the larger inner diameter coming to the front side.

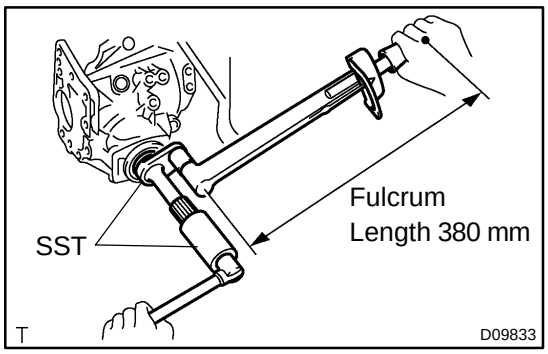

(c) Using SST, install a new gear nut.
SST 09326–20011, 09556–16030
Torque:
260 – 355 N·m (2,647 – 3,616 kgf·cm, 191 – 262 ft·lbf)

HINT:

- Using a torque wrench with a fulcrum length of 380 mm (15.03 in.).
- This torque value is effective in the case that SST is parallel to a torque wrench.

NOTICE:

Do not stake the nut until the final adjustment of the preload, tooth contact and backlash is completed.

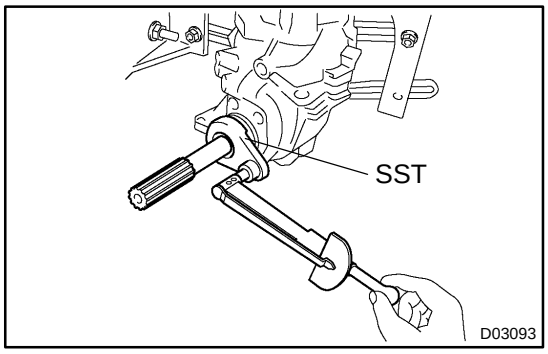

48. ADJUST DRIVEN PINION PRELOAD

(a) Using SST and a torque wrench, measure the driven pinion preload.
SST 09326–20011
Preload (at starting):
New bearing:
0.52 – 0.97 N·m (5 – 10 kgf·cm, 4.6 – 8.6 in.·lbf)
Reused bearing:
0.30 – 0.52 N·m (3 – 5 kgf·cm, 2.7 – 4.6 in.·lbf)

HINT:

- Using a torque wrench with a fulcrum length of 160 mm (6.3 in.).
- This torque value is effective in case that SST is parallel to torque wench.
- If the preload is not sufficient, adjust the driven pinion by tightening the lock nut by 5° to 10° and measuring the preload until the preload is with in the standard value.
- If the preload is more than standard value, replace the spacer with a new one.
- Even if the tightening torque of gear nut exceeds the specified torque, if the preload is not enough, loosen the gear nut once and apply rust preventive oil or gear oil super to the gear nut and to the screw or bearing surface of driven pinion. Then do the procedure again. If the tightening torque is smaller than the specified value, replace the pinion bearing spacer with a new one and adjust it.

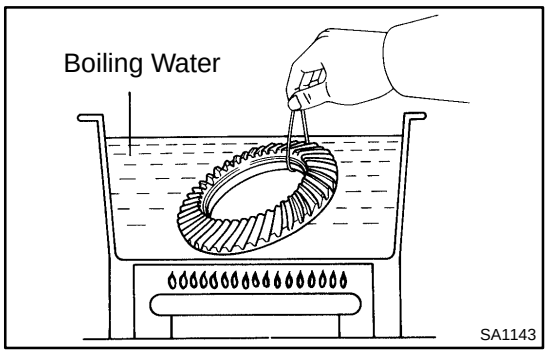

49. INSTALL RING GEAR

(a) Clean the contact surface of the ring gear and transfer ring gear mounting case.

(b) Heat the ring gear in water and boil for 10 minutes.

(c) Carefully remove the ring gear from the water.

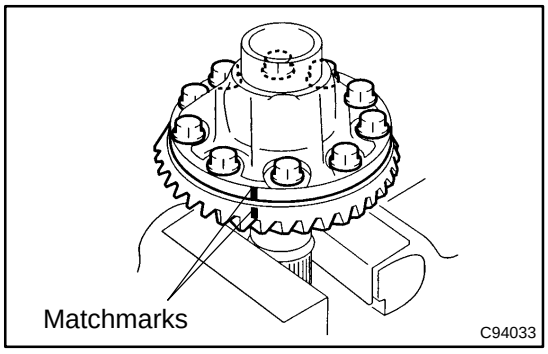

(d) After the moisture on the ring gear has completely evaporated, quickly install the ring gear to the transfer ring gear mounting case.

(e) Install the 10 bolts.

Torque: 77.5 N·m (790 kgf·cm, 57 ft·lbf)

NOTICE:

- **Tighten the bolts in diagonal order in splitting several times.**
- **After the ring gear has well cooled down, tighten the bolts.**
- **Make paint marks, etc, do the procedure while checking the bolts retightened.**

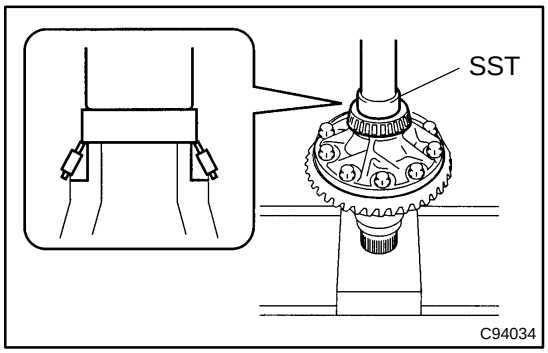

50. INSTALL RING GEAR MOUNTING CASE BEARING

(a) Using SST and a press, press the ring gear mounting case bearing RH inner race into the ring gear mounting case.

SST 09950–60010 (09951–00420)

(b) Install the ring gear mounting case bearing RH outer race to the ring gear mounting case.

(c) Apply gear oil to the ring gear mounting case bearing RH.

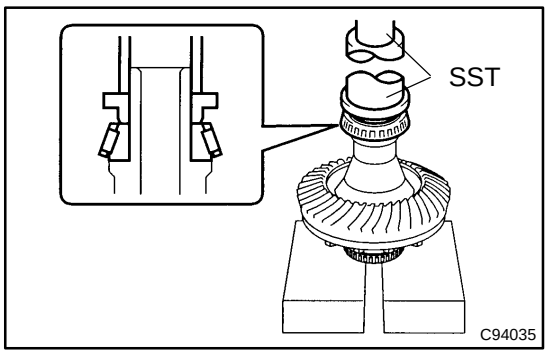

(d) Using SST and a press, press the ring gear mounting case LH inner race into the ring gear mounting case.

SST 09223–00010, 09726–40010

(e) Install the washer to the case.

HINT:

Use a new washer with the same thickness as the removed one when installation.

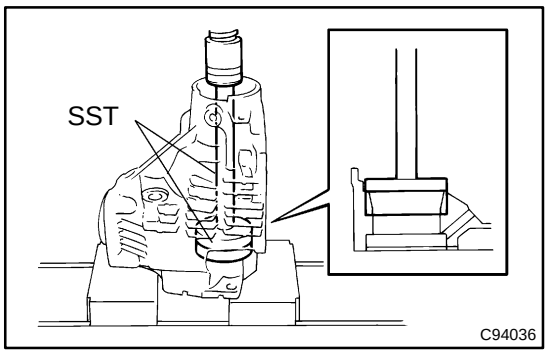

(f) Using SST and a press, press the ring gear mounting case bearing LH outer race into the case.
SST 09950–60010 (09951–00620), 09950–70010 (09951–07200)

(g) Apply gear oil to the ring gear mounting case bearing.

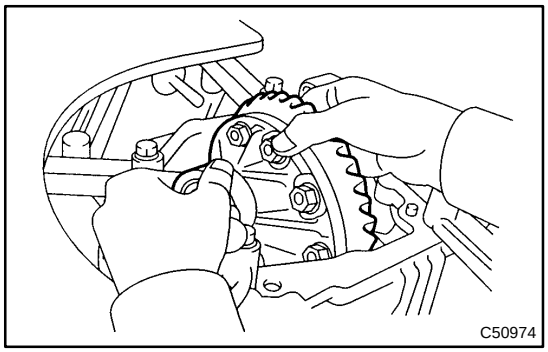

51. INSTALL TRANSFER RING GEAR MOUNTING CASE

(a) Apply gear oil to the ring gear mounting case.

(b) Install the ring gear mounting case to the transfer case.

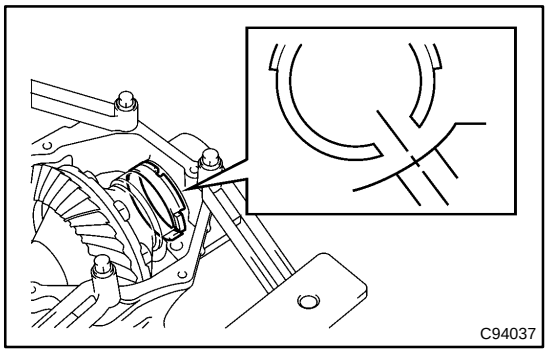

52. INSTALL TRANSFER OUTPUT SHAFT SPACER NO.1

(a) To install a new spacer No.1, align the cutouts on it with the hole of the case as shown in the illustration.

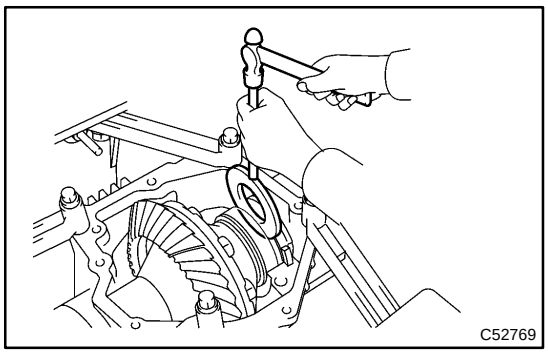

53. INSTALL TRANSFER RING GEAR MOUNTING CASE WASHER NO.2

(a) Using a brass bar and a hammer, install a new case washer No.2.

HINT:
Install a new washer No.2 with the same thickness as the removed one.

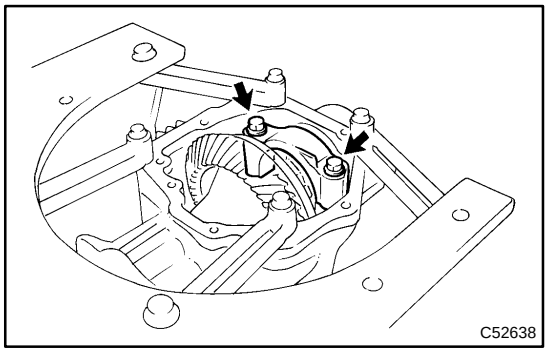

54. INSTALL BEARING CAP

(a) Install the bearing cap with the 2 bolts.
Torque: 63.2 N·m (644 kgf·cm, 47 ft·lbf)

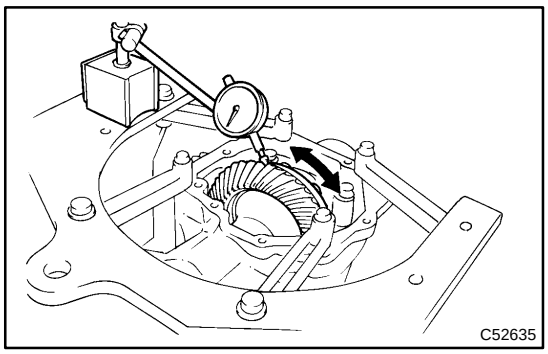

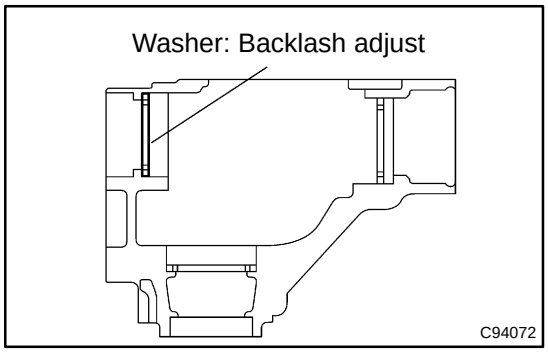

55. INSPECT BACKLASH

(a) Place a dial indicator on the teeth surface on the ring gear vertically, check with fixing the driven pinion and moving the ring gear.

Backlash: 0.10 – 0.15 mm (0.0039 – 0.0059 in.)

NOTICE:

Check at least 3 positions on the circumference of the ring gear.

(b) If the backlash is not in the range of specified value, select the ring gear mounting case bearing LH side washer from the table and install it to meet the specified value.

Washer thickness: mm (in.)

Mark	Thickness	Mark	Thickness
50	2.05 (0.0807)	68	2.59 (0.1020)
51	2.08 (0.0819)	69	2.62 (0.1031)
52	2.11 (0.0831)	70	2.65 (0.1043)
53	2.14 (0.0843)	71	2.68 (0.1055)
54	2.17 (0.0854)	72	2.71 (0.1067)
55	2.20 (0.0866)	73	2.74 (0.1079)
56	2.23 (0.0878)	74	2.77 (0.1091)
57	2.26 (0.0890)	75	2.80 (0.1102)
58	2.29 (0.0902)	76	2.83 (0.1114)
59	2.32 (0.0913)	77	2.86 (0.1126)
60	2.35 (0.0925)	78	2.89 (0.1138)
61	2.38 (0.0937)	79	2.92 (0.1150)
62	2.41 (0.0949)	80	2.95 (0.1161)
63	2.44 (0.0961)	81	2.98 (0.1173)
64	2.47 (0.0973)	82	3.01 (0.1185)
65	2.50 (0.0984)	83	3.04 (0.1197)
66	2.53 (0.0996)	84	3.07 (0.1209)
67	2.56 (0.1008)	–	–

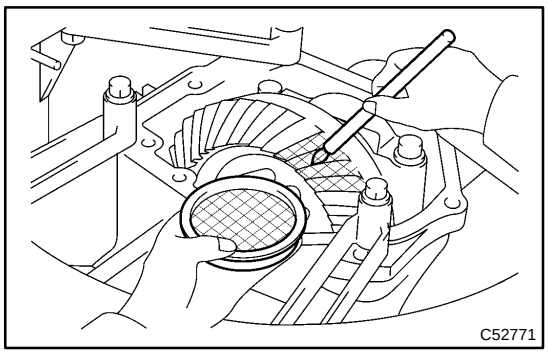
C52771

56. INSPECT TOOTH CONTACT BETWEEN RING GEAR AND DRIVEN PINION

(a) Coat 3 or 4 teeth at the 4 different positions on the ring gear with red read.

(b) Rotate the ring gear, inspect the teeth pattern.

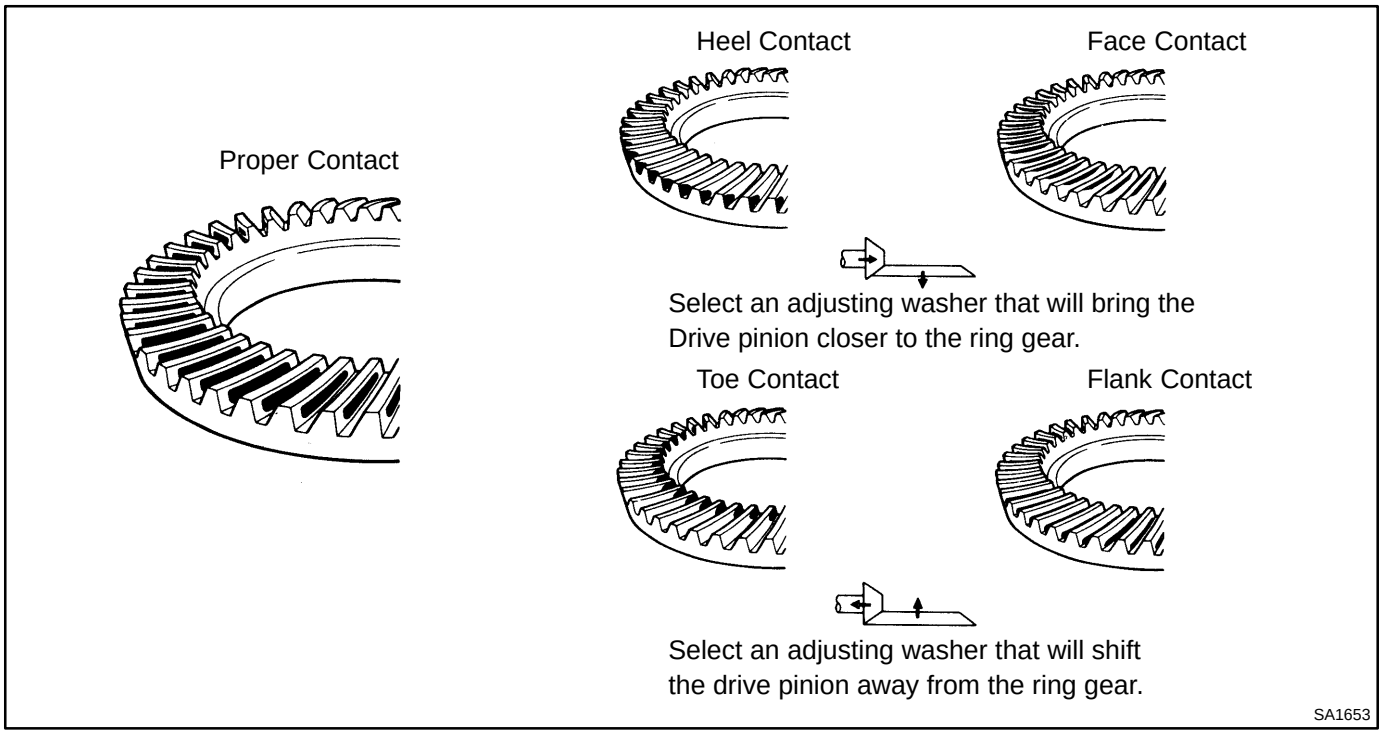

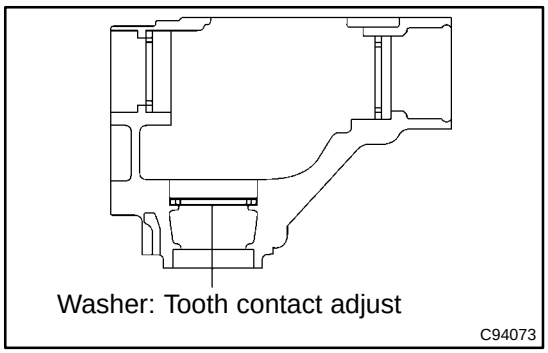

(c) If the teeth are not contacting properly, select the proper washer again.

Washer thickness: mm (in.)

Mark	Thickness	Mark	Thickness
AA	2.10 (0.0827)	JA	2.34 (0.0921)
AC	2.12 (0.0835)	JC	2.36 (0.0929)
BB	2.14 (0.0843)	KB	2.38 (0.0937)
CA	2.16 (0.0850)	LA	2.40 (0.0945)
CC	2.18 (0.0858)	LC	2.42 (0.0953)
DB	2.20 (0.0866)	MB	2.44 (0.0961)
EA	2.22 (0.0874)	NA	2.46 (0.0969)
EC	2.24 (0.0882)	NC	2.48 (0.0976)
FB	2.26 (0.0890)	PB	2.50 (0.0984)
GA	2.28 (0.0898)	QA	2.52 (0.0992)
GC	2.30 (0.0906)	QC	2.54 (0.1000)
HB	2.32 (0.0913)	–	–

NOTICE:

When the board thickness is changed, readjust the backlash.

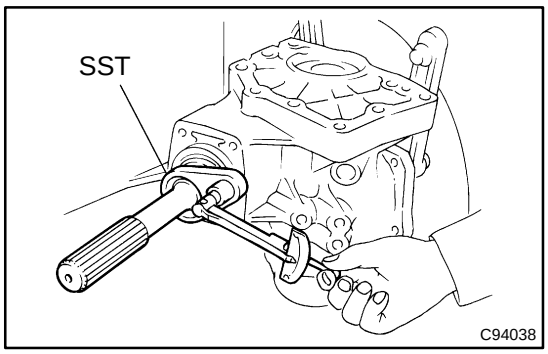

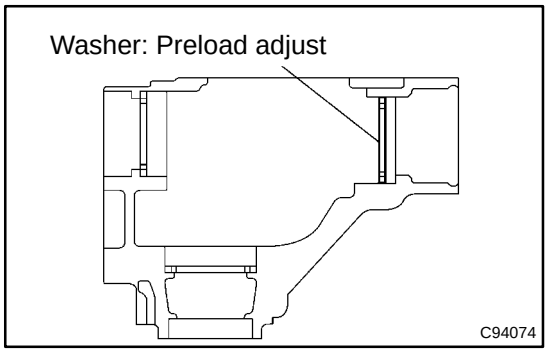

57. ADJUST MEASURE TOTAL PRELOAD

(a) Using SST and a torque wrench, measure the total preload.

SST 09326–20011

Total preload:

New bearing:

Driven pinion preload + 0.3 – 0.45 N·m (3 – 5 kgf·cm, 2.7 – 4.0 in.·lbf)

Reused bearing:

Driven pinion preload + 0.19 – 0.33 N·m (2 – 3 kgf·cm, 1.7 – 2.9 in.·lbf)

HINT:

- Using a torque wrench with a fulcrum length of 160 mm (6.3 in.).
- Turn the driven pinion counterclockwise and clockwise several times.

If the preload non–standard, again select proper washer.

Washer thickness: mm (in.)

Mark	Thickness	Mark	Thickness
A0	2.47 (0.0972)	C3	3.16 (0.1244)
A1	2.50 (0.0984)	C4	3.19 (0.1256)
A2	2.53 (0.0996)	C5	3.22 (0.1268)
A3	2.56 (0.1008)	C6	3.25 (0.1280)
A4	2.59 (0.1020)	C7	3.28 (0.1291)
A5	2.62 (0.1031)	C8	3.31 (0.1303)
A6	2.65 (0.1043)	C9	3.34 (0.1315)
A7	2.68 (0.1055)	D0	3.37 (0.1327)
A8	2.71 (0.1067)	D1	3.40 (0.1339)
A9	2.74 (0.1079)	D2	3.43 (0.1350)
B0	2.77 (0.1091)	D3	3.46 (0.1362)
B1	2.80 (0.1102)	D4	3.49 (0.1374)
B2	2.83 (0.1114)	D5	3.52 (0.1386)
B3	2.86 (0.1126)	D6	3.55 (0.1398)
B4	2.89 (0.1138)	D7	3.58 (0.1409)
B5	2.92 (0.1150)	D8	3.61 (0.1421)
B6	2.95 (0.1161)	D9	3.64 (0.1433)
B7	2.98 (0.1173)	E0	3.67 (0.1445)
B8	3.01 (0.1185)	E1	3.70 (0.1457)
B9	3.04 (0.1197)	E2	3.73 (0.1469)
C0	3.07 (0.1209)	E3	3.76 (0.1480)
C1	3.10 (0.1220)	E4	3.79 (0.1492)
C2	3.13 (0.1232)	E5	3.82 (0.1504)

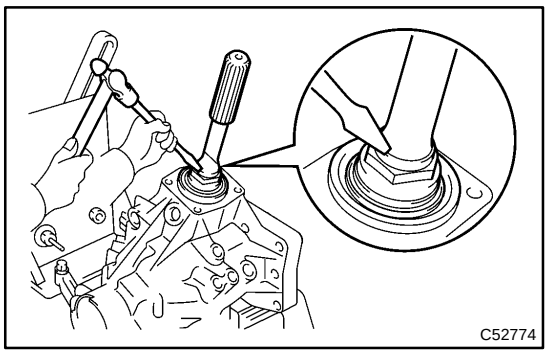

(b) Using a chisel and a hammer, stake the gear nut.

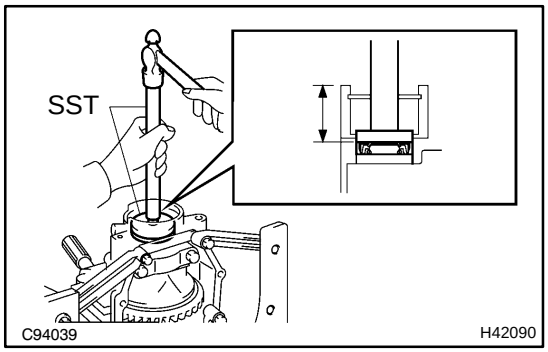

58. INSTALL TRANSFER CASE RH OIL SEAL

(a) Using SST and a hammer, drive a new oil seal into the case until it reaches the position shown in the illustration.
SST 09950–60010 (09951–00360, 09951–00590, 09952–06010), 09950–70010 (09951–07150)
Drive in depth: 33.7 – 34.3 mm (1.328 – 1.350 in.)

NOTICE:
Do not install the oil seal at an angle.

(b) Apply a little MP grease to the lip of the oil seal.

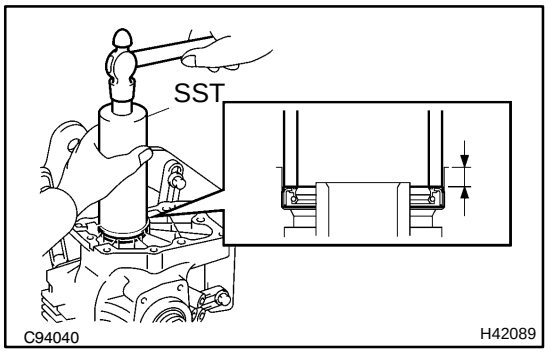

59. INSTALL TRANSFER CASE OIL SEAL

(a) Using SST and a hammer, drive a new oil seal into the transfer case until the position in the illustration.
SST 09316–60011 (09316–00011)
Drive in depth: 9.7 – 10.3 mm (0.328 – 0.406 in.)

NOTICE:
Do not install the oil seal at an angle.

(b) Apply a little MP grease to the lip of the oil seal.

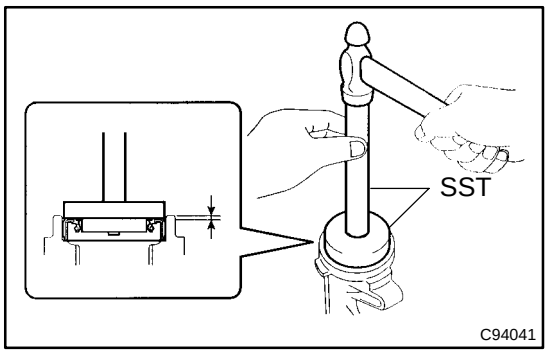

60. INSTALL TRANSFER EXTENSION HOUSING TYPE T OIL SEAL

(a) Using SST and a hammer, drive a new oil seal into the extension housing until the position in the illustration.
SST 09950–60010 (09951–00380, 09951–00580, 09952–06010), 09950–70010 (09951–07150)
Drive in depth: 1.1 – 1.9 mm (0.043 – 0.075 in.)

(b) Apply a little MP grease to the lip of the oil seal.

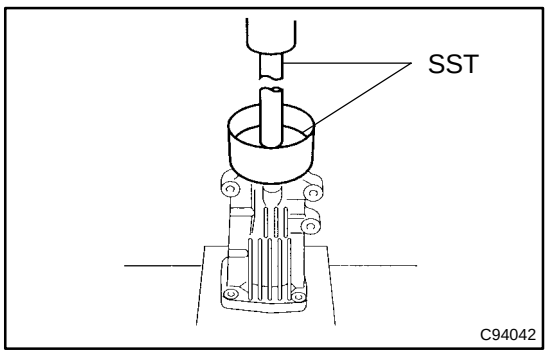

61. INSTALL TRANSFER EXTENSION HOUSING DUST DEFLECTOR

(a) Using SST and a press, install the dust deflector to the extension housing.
SST 09950–60010 (09951–00640), 09950–70010 (09951–07150)

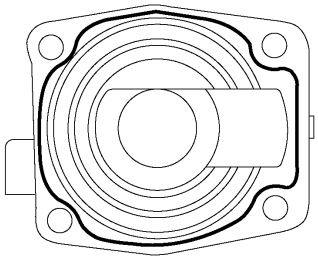

Seal Bend Width 1.2 mm (0.047 in.)

D03532

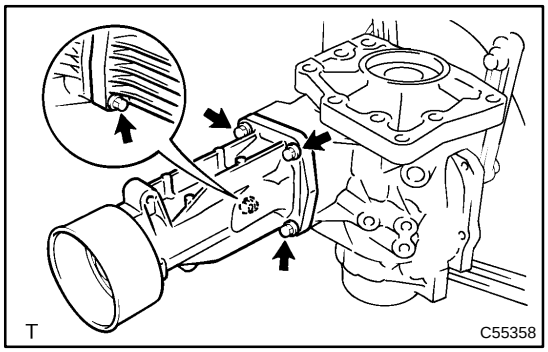

62. INSTALL TRANSFER EXTENSION HOUSING SUB–ASSY

(a) Remove any FIPG material and be careful not to drop oil on the contacting surfaces of the extension housing sub–assy and the transfer case.

(b) Degrease the surface with white gasoline.

(c) Apply FIPG to the extension housing sub–assy.

FIPG:

Part No.08826–00090, THREE BOND 1281 or equivalent

(d) Install the extension housing sub–assy with the 4 bolts to the case.

Torque: 25.5 N·m (260 kgf·cm, 19 ft·lbf)

NOTICE:

Assemble transfer extension housing sub–assy within 10 minutes after FIPG application.

63. SEPARATE TRANSFER ASSY

(a) Remove the transfer assy from the overhaul attachment.

64. INSTALL TRANSFER CASE STRAIGHT PIN

(a) Using a plastic hammer, drive the 4 straight pins into the position in the illustration of the case.

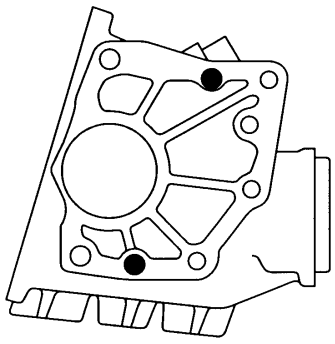

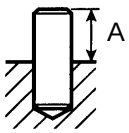

A: 10.0 – 11.0 mm
(0.393 – 0.433 in.)

C50991

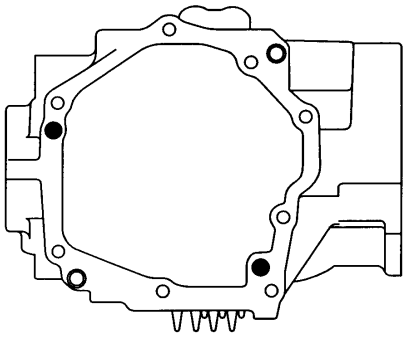

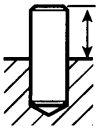

B: 6.5 – 7.5 mm
(0.256 – 0.295 in.)

C94044

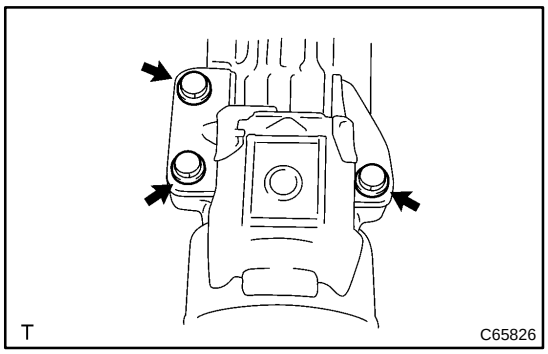

65. INSTALL TRANSFER DYNAMIC DAMPER

(a) Install the transfer dynamic damper with the 3 bolts to the extension housing sub–assy.
Torque: 25.5 N·m (260 kgf·cm, 19 ft·lbf)

66. INSTALL TRANSFER CASE BREATHER PLUG

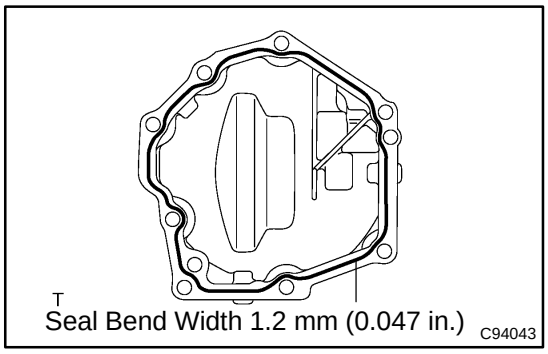

67. INSTALL TRANSFER CASE COVER NO.1

(a) Install the breather oil deflector with the bolt.
Torque: 6.5 N·m (66 kgf·cm, 58 in.·lbf)

(b) Remove any FIPG material and be careful not to drop oil on the contacting surfaces of the transfer case cover No.1 and the transfer case.

(c) Degrease the surface with white gasoline.

(d) Apply FIPG to the transfer case cover No.1.
FIPG:
Part No.08826–00090, THREE BOND 1281 or equivalent

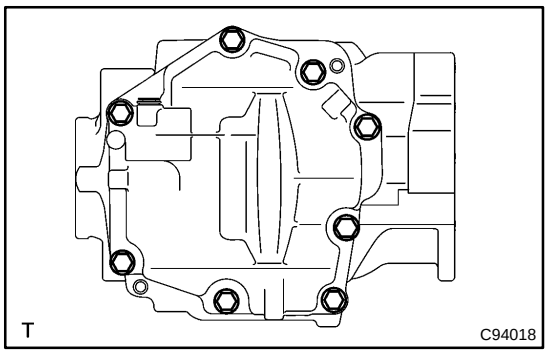

(e) Install the transfer case cover No.1 with the 8 bolts.
Torque: 19.6 N·m (200 kgf·cm, 14 ft·lbf)

NOTICE:

- **Before pouring transfer oil, leave it at least an hour.**
- **Assemble transfer case cover No.1 within 10 minutes after FIPG application.**

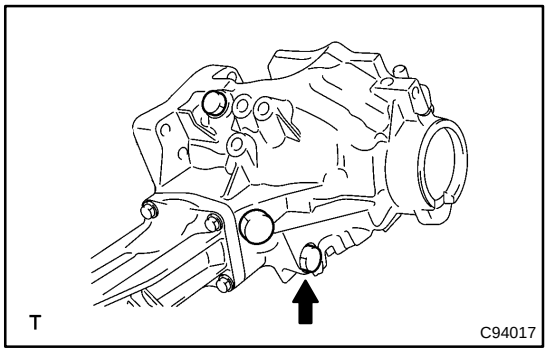

68. INSTALL TRANSFER DRAIN PLUG

(a) Install a new gasket to the transfer drain plug.

(b) Install the transfer drain plug to the transfer assy.
Torque: 49 N·m (500 kgf·cm, 36 ft·lbf)

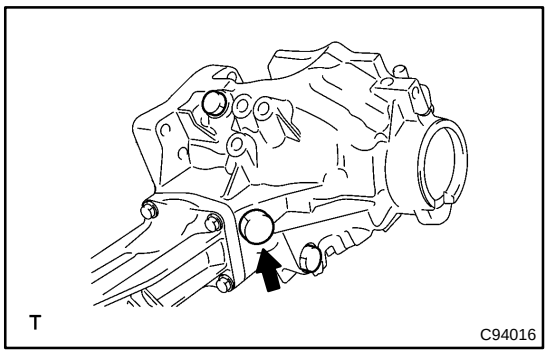

69. INSTALL TRANSFER CASE NO.2 PLUG

(a) Install a new gasket to the transfer case No.2 plug.

(b) Temporary tighten the transfer case No.2 plug to the transfer assy.

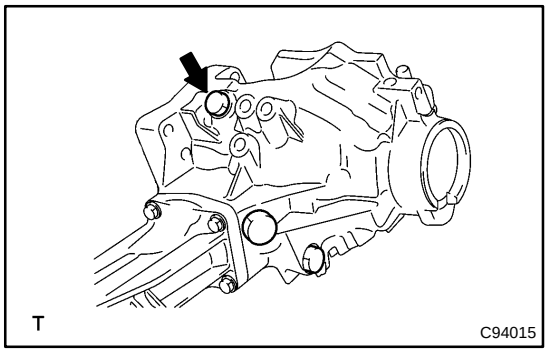

70. INSTALL TRANSFER CASE NO.1 PLUG

(a) Install a new gasket to the transfer case No.1 plug.

(b) Install the transfer case No.1 plug to the transfer assy.
Torque: 49 N·m (500 kgf·cm, 36 ft·lbf)

71. INSTALL TRANSFER & TRANSAXLE SETTING STUD BOLT

(a) Install the 4 stud bolts to the position in the illustration of the case.
Torque: 39.2 N·m (400 kgf·cm, 29 ft·lbf)

HINT:

In the case of this stud bolt in the illustration, the bottom side is the case installation side.

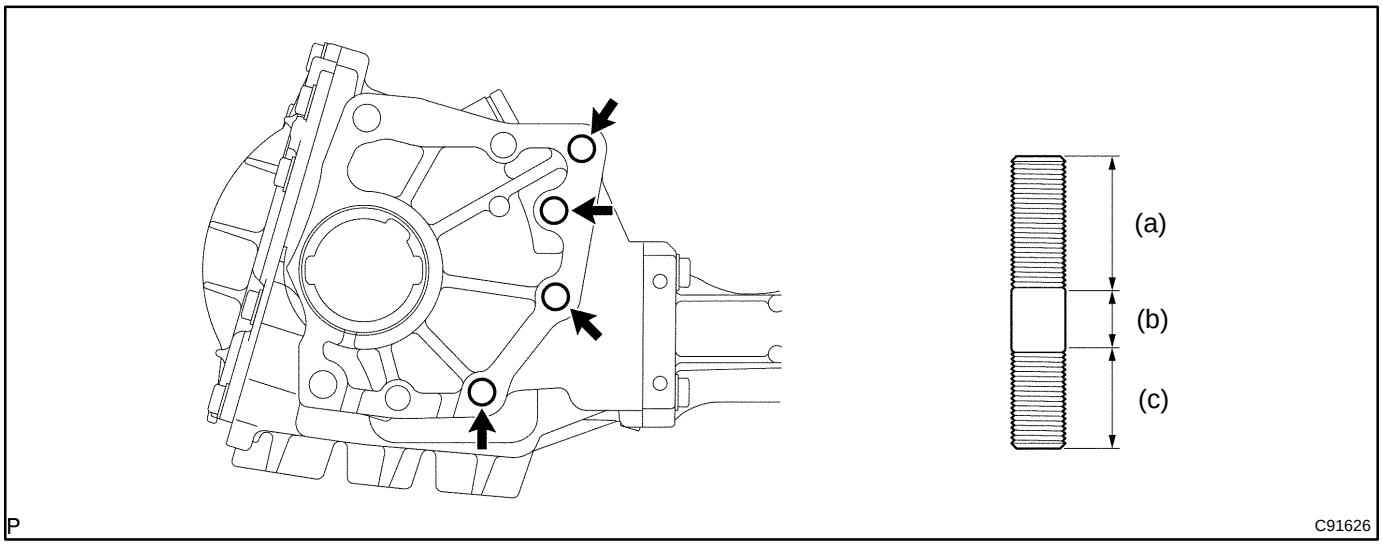

Stud bolt length:
a: 30 mm (1.1811 in.)
b: 12 mm (0.4724 in.)
c: 22 mm (0.8661 in.)

72. INSTALL TRANSFER ASSY

(a) Install the transfer assy with the 6 nuts to the transaxle assy.
Torque: 68.6 N·m (700 kgf·cm, 51 ft·lbf)

NOTICE:

- **Install the transfer assy to the transaxle assy horizontally.**
- **Do not touch the oil seal part of the transfer assy when installation.**

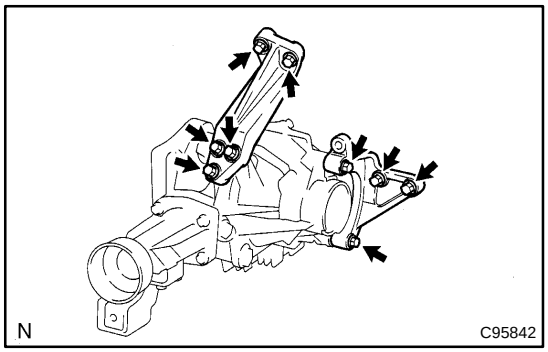

73. INSTALL TRANSFER STIFFENER PLATE RH

(a) Install the stiffener plate RH with the 4 bolts.
Torque: 34 N·m (347 kgf·cm, 25 ft·lbf)

74. INSTALL TRANSFER STIFFENER PLATE CENTER

(a) Install the stiffener plate center with the 5 bolts.
Torque: 34 N·m (347 kgf·cm, 25 ft·lbf)

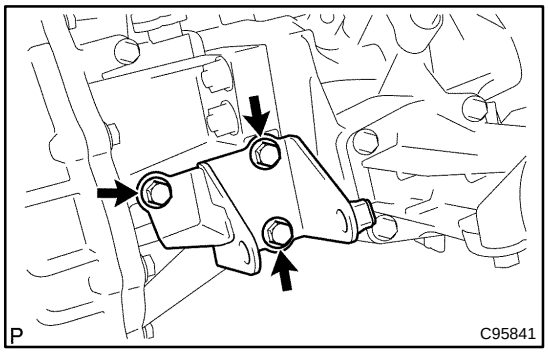

75. INSTALL TRANSVERSE ENGINE ENGINE MOUNTING BRACKET

(a) Install the engine mounting bracket with the 3 bolts.
Torque: 64 N·m (652 kgf·cm, 47 ft·lbf)

76. INSTALL FRONT DRIVE SHAFT ASSY RH (See page 30–15)
77. INSTALL EXHAUST MANIFOLD (See page 14–30)
78. INSTALL EXHAUST MANIFOLD HEAT INSULATOR NO.1 (See page 14–30)
79. INSTALL OXYGEN SENSOR (See page 14–30)
80. INSTALL MANIFOLD STAY (See page 14–30)
81. INSTALL FRONT SUSPENSION CROSSMEMBER W/CENTER MEMBER (See page 14–30)
82. INSTALL RACK & PINION POWER STEERING GEAR ASSY (See page 14–30)
SST 09023–38200
83. INSTALL VANE PUMP ASSY (See page 14–30)
84. INSTALL ENGINE ASSEMBLY WITH TRANSAXLE (See page 14–30)
SST 09670–00010
85. ADD TRANSFER OIL (See page 31–3)
Oil grade: API GL–5
Viscosity: SAE 90
Torque: 49 N·m (500 kgf·cm, 36 ft·lbf)
86. ADD AUTOMATIC TRANSAXLE FLUID
87. ADD ENGINE OIL
88. ADD COOLANT (See page 16–6)
89. CHECK ENGINE OIL LEAK
90. CHECK ENGINE COOLANT LEAK

91. CHECK FUEL LEAK
92. CHECK EXHAUST GAS LEAK
93. INSPECT CHECK IDLE SPEED AND IGNITION TIMING (See page 14–1)
SST 09843–18030, 09843–18040
94. INSPECT CO/HC (See page 14–1)
95. INSPECT AND ADJUST FRONT WHEEL ALIGNMENT (See page 26–6)
96. CHECK ABS SPEED SENSOR SIGNAL (See page 05–316)

TRANSFER CASE RH OIL SEAL (U341F)

3102E–01

REPLACEMENT

1. REMOVE FRONT WHEELS

2. DRAIN TRANSAXLE OIL

(a) Remove the drain plug and gasket, and drain ATF.

(b) Install a new gasket and drain plug.

Torque: 49 N·m (500 kgf·cm, 36 ft·lbf)

3. REMOVE TRANSFER CASE NO.2 PLUG

(a) Remove the No.2 plug and gasket.

4. DRAIN TRANSFER OIL

(a) Remove the drain plug and gasket, and drain transfer oil.

(b) Install a new gasket and drain plug.

Torque: 49 N·m (500 kgf·cm, 36 ft·lbf)

5. REMOVE FRONT AXLE HUB RH NUT

SST 09930–00010

6. REMOVE FRONT DRIVE SHAFT ASSY RH (See page 30–15)

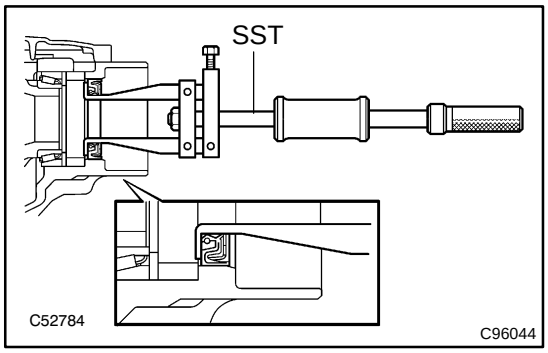

7. REMOVE TRANSFER CASE RH OIL SEAL

(a) Using SST, remove the transfer case RH oil seal.

SST 09308–00010

NOTICE:

Do not damage the oil–seal–fitted surface of the case.

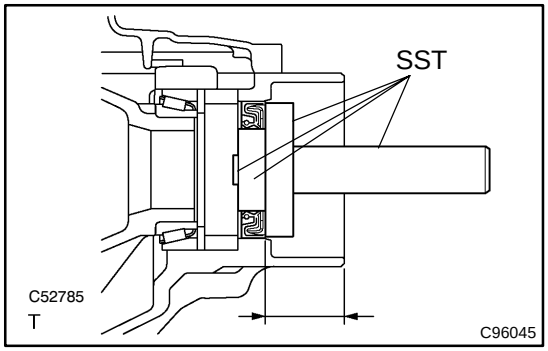

8. INSTALL TRANSFER CASE RH OIL SEAL

(a) Using SST, drive a new oil seal into the case to the position shown in the illustration.

SST 09950–60010 (09951–00360, 09951–00590, 09952–06010), 09950–70010 (09951–07150)

Drive in depth: 33.7 – 34.3 mm (1.3268 – 1.3504 in.)

NOTICE:

Do not install the oil seal obliquely.

(b) Apply small amount of MP grease to the lip of the oil seal.

9. INSTALL FRONT DRIVE SHAFT ASSY RH (See page 30–15)

10. INSTALL FRONT AXLE HUB RH NUT

11. ADD TRANSFER OIL (See page 31–3)

12. INSPECT TRANSFER OIL (See page 31–3)

13. INSTALL TRANSFER CASE NO.2 PLUG

(a) Install a new gasket and No.2 plug.

Torque: 49 N·m (500 kgf·cm, 36 ft·lbf)

14. ADD TRANSAXLE OIL (See page 40–2)

15. INSPECT TRANSAXLE OIL (See page 40–2)

16. INSTALL FRONT WHEELS

17. INSPECT AND ADJUST FRONT WHEEL ALIGNMENT (See page 26–6)

18. CHECK ABS SPEED SENSOR SIGNAL (See page 05–316)

TRANSFER EXTENSION HOUSING TYPE T OIL SEAL (U341F)

3102G–01

REPLACEMENT

1. DRAIN TRANSFER OIL

(a) Remove the drain plug and gasket, and drain transfer oil.

(b) Install a new gasket and drain plug.

Torque: 49 N·m (500 kgf·cm, 36 ft·lbf)

2. REMOVE PROPELLER W/CENTER BEARING SHAFT ASSY

SST 09325–20010

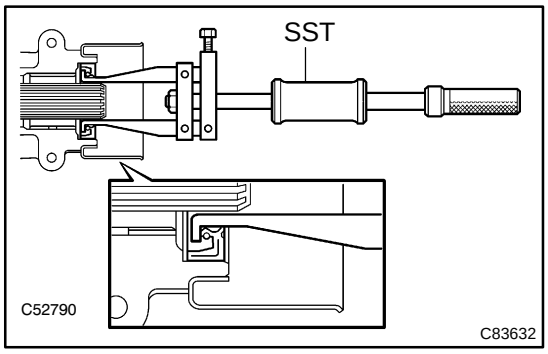

3. REMOVE TRANSFER EXTENSION HOUSING TYPE T OIL SEAL

(a) Using SST, remove the oil seal from the extension housing.

SST 09308–00010

NOTICE:

Be careful not to damage the oil–seal–fitted surface and the inside surface of the bush.

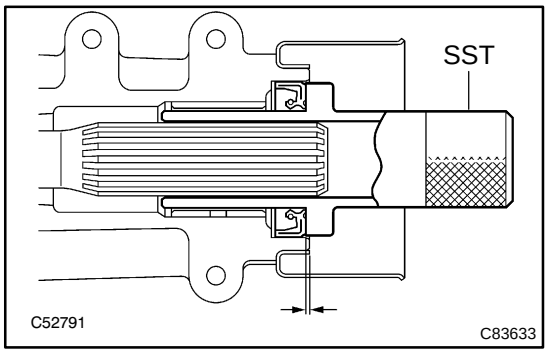

4. INSTALL TRANSFER EXTENSION HOUSING TYPE T OIL SEAL

(a) Using SST, drive a new oil seal into the extension housing to the position shown in the illustration.

SST 09325–20010

Drive in depth: 1.1 – 1.9 mm (0.0433 – 0.0748 in.)

NOTICE:

Do not install the oil seal obliquely.

(b) Apply small amount of MP grease to the lip of the oil seal.

5. TEMPORARY TIGHTEN PROPELLER W/CENTER BEARING SHAFT ASSY (See page 30–6)

6. FULLY TIGHTEN PROPELLER W/CENTER BEARING SHAFT ASSY (See page 30–6)

7. ADD TRANSFER OIL (See page 31–3)

8. INSPECT TRANSFER OIL (See page 31–3)

TRANSFER SYSTEM (U341F)

3102B–01

PRECAUTION

- **Before disassembly, clean the transfer assy and remove any deposited sand or mud to prevent it from entering the inside of the transfer during disassembly and assembly.**
- **When removing any light alloy part such as a transfer cover, do not pry it off with a tool like a screwdriver but tap it out with a plastic hammer.**
- **Always organize the removed parts properly and protect them away from dust.**
- **After cleaning and drying completely before installation, apply hypoid gear oil to each part. Do not use alkaline chemicals when cleansing aluminum or rubber parts and ring gear set bolts. Also, do not use any cleansing oil (ex. white gasoline) to clean the rubber parts such as oil seals.**
- **Sufficiently apply hypoid gear oil to any sliding surface or rotating part.**
- **Do not directly hold a part by vise. Make sure to put an aluminum sheet between them.**
- **Replace any damaged or deformed snap ring with new one.**
- **If mating surface of the case is scratched, it may cause oil leakage. Therefore, carefully avoid such damage when handling.**
- **Before applying a sealant, completely remove old sealant stuck on the sealed parts and clean them with white gasoline.**
- **Do not supply oil immediately after installing sealed parts. Allow 1 hour or more.**
- **Scratches on a contact surface with an oil seal or gasket may result in oil leakage. Carefully avoid such damage when handling.**
- **When press–fitting an oil seal, take care to prevent the oil seal lip and its periphery from being damaged.**
- **When replacing a bearing , replace both outer and inner races as one set.**

3102C–01

PROBLEM SYMPTOMS TABLE

Symptom	Suspect Area	See page
Noise	1. Oil (Level low)	31–3
	2. Back lash adjustment	31–11
	3. Preload adjustment	31–11
	4. Tooth contact adjustment	31–11
	5. Transfer driven pinion bearing (Worn)	31–11
	6. Ring gear mounting case bearing (Worn)	31–11
Oil leakage	1. Oil (Level high)	31–3
	2. Oil seal (Worn or damage) Right bearing retainer	31–4
	3. Oil seal (Worn or damage) Transfer case	31–6
	4. Oil seal (Worn or damage) Extension housing	31–8
	5. Gasket (Damaged)	31–11
	6. Seal (Damaged)	31–11

TRANSFER OIL (U341F)

3102D–01

ADJUSTMENT

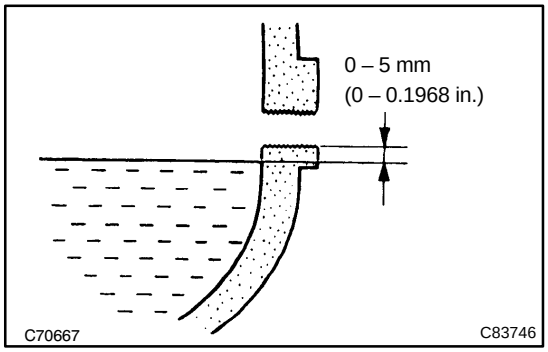

1. INSPECT TRANSFER OIL

(a) Remove the No.2 plug and gasket.

(b) Check the oil level is within 0 – 5 mm (0 – 0.1968 in.) down from the lowest end of the hole for No.2 plug.

NOTICE:

- **When changing oil, recheck the oil level after driving.**
- **Excessively large or small quantity of oil may cause some trouble.**

(c) When the oil level is too low, check for oil leakage.

(d) Tighten the No.2 plug with a new gasket.
Torque: 49 N·m (500 kgf·cm, 36 ft·lbf)

2. ADJUST TRANSFER OIL

(a) Remove the No.2 plug and gasket, and supply oil.

NOTICE:

- **When supplying oil, pour it slowly.**
- **Repeat supplying oil several times at several minutes interval.**

HINT:

Within 0 – 5 mm (0 – 0.1968 in.) down from the lowest end of the hole for the No.2 plug.

(b) After leaving it alone for 5 min., check the oil level again.

(c) Tighten the No.2 plug with a new gasket.
Torque: 49 N·m (500 kgf·cm, 36 ft·lbf)

DECELERATION SENSOR (4WD)

320JJ–01

REPLACEMENT

1. REMOVE FRONT SEAT ASSEMBLY LH (See page 72–2)

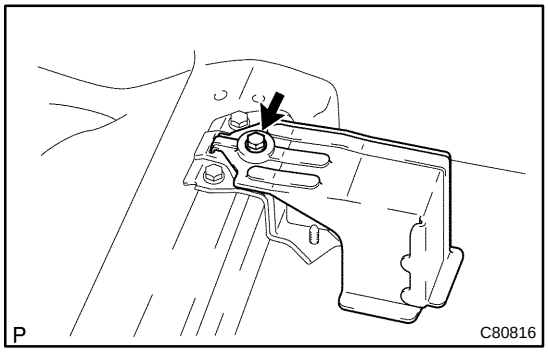

2. REMOVE DECELERATION SENSOR BRACKET

(a) Remove the bolt and upper side deceleration sensor bracket.

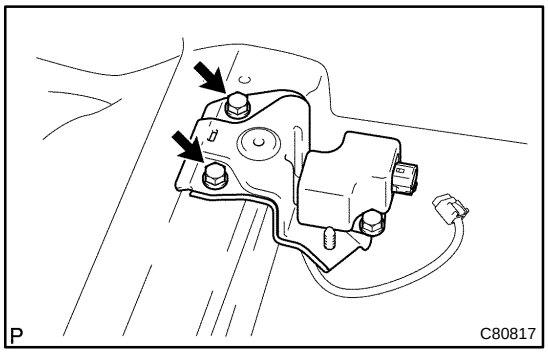

3. REMOVE DECELERATION SENSOR

(a) Disconnect the deceleration sensor connector from the deceleration sensor, then remove the 2 bolts and deceleration sensor with the anchor side deceleration sensor bracket.

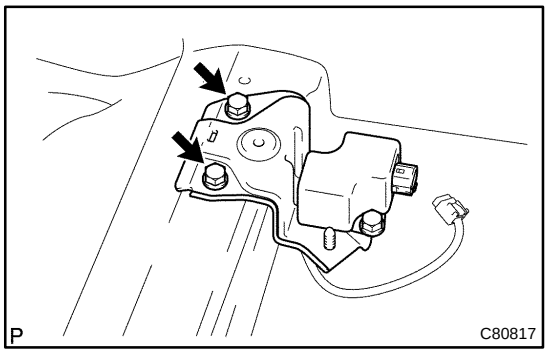

4. INSTALL DECELERATION SENSOR

(a) Install the 2 bolts and deceleration sensor to the body, then connect the deceleration sensor connector to the deceleration sensor.

Torque: 21 N·m (214 ft·lbf, 15 ft·lbf)

NOTICE:

- **Do not use the dropped or damage sensor.**
- **Free from the foreign matters or floor carpet between the deceleration sensor bracket and body.**

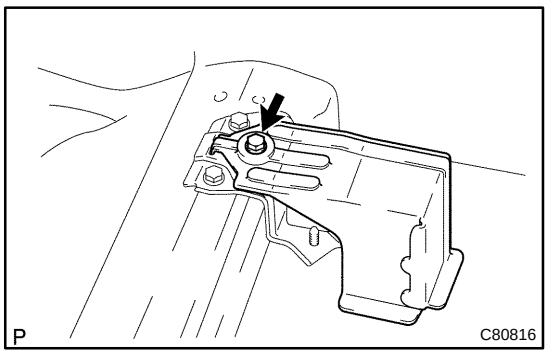

5. INSTALL DECELERATION SENSOR BRACKET

(a) Install the bolt and upper side deceleration sensor bracket.

Torque: 21 N·m (214 ft·lbf, 15 ft·lbf)

6. INSTALL FRONT SEAT ASSEMBLY LH (See page 72–2)

7. CHECK DECELERATION SENSOR SIGNAL (See page 05–316)

SPEED SENSOR REAR LH (4WD)

320JI–01

REPLACEMENT

1. REMOVE REAR WHEEL

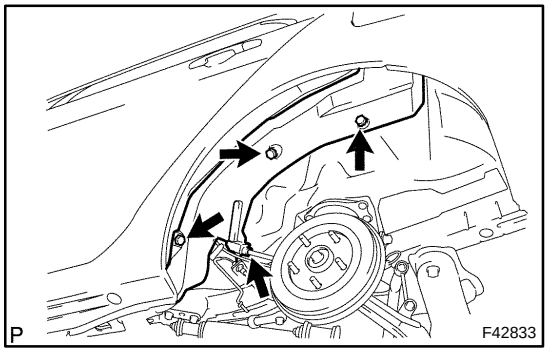

2. REMOVE FUEL TANK FILLER PIPE PROTECTOR

(a) Remove the 3 bolts, then remove the fuel tank filler pipe protector LH.

3. REMOVE REAR SEAT BACK ASSY LH (See page 72–10)

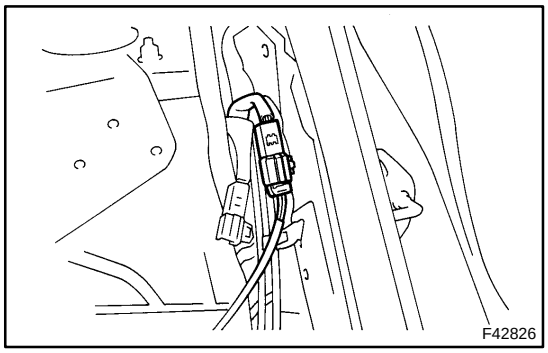

4. DISCONNECT SPEED SENSOR REAR LH

(a) Disconnect the speed sensor connector, and pull out the sensor wire harness with grommet.

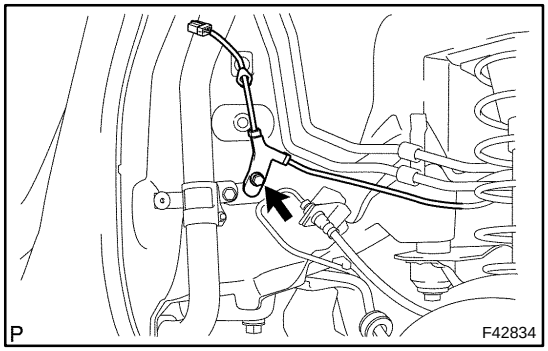

5. REMOVE SPEED SENSOR REAR LH

(a) Remove the bolt from the body.

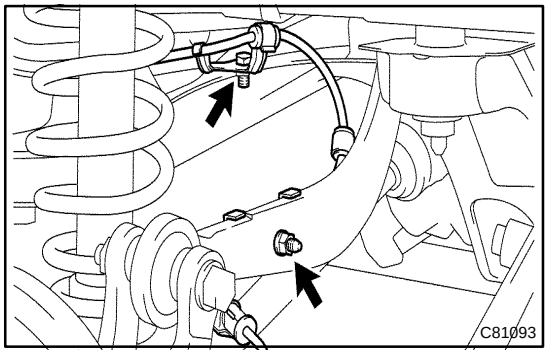

(b) Remove the bolt and nut from the suspension member and upper arm.

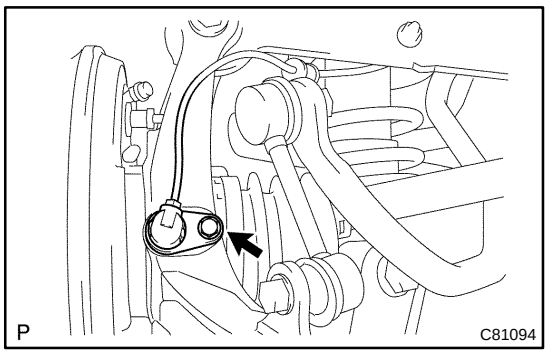

(c) Remove the bolt from the knuckle, and remove the speed sensor rear LH.

NOTICE:

Keep on the sensor tip clean.

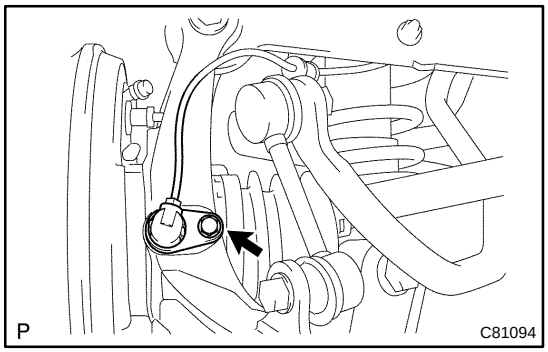

6. INSTALL SPEED SENSOR REAR LH

(a) Install the speed sensor rear LH with the bolt to knuckle.

NOTICE:

Make sure the sensor tip is clean.

Torque: 8.0 N·m (82 kgf·cm, 71 in.·lbf)

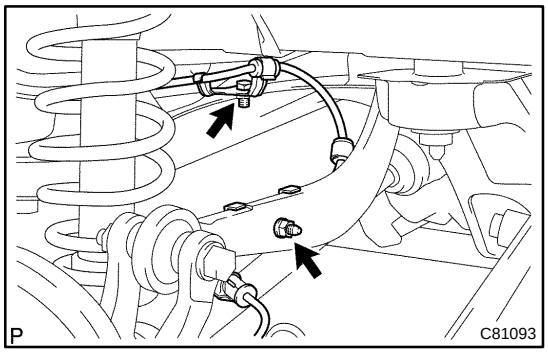

(b) Install the clamp with the bolt and nut to the upper arm and suspension member.

Torque: 5.0 N·m (51 kgf·cm, 44 in.·lbf)

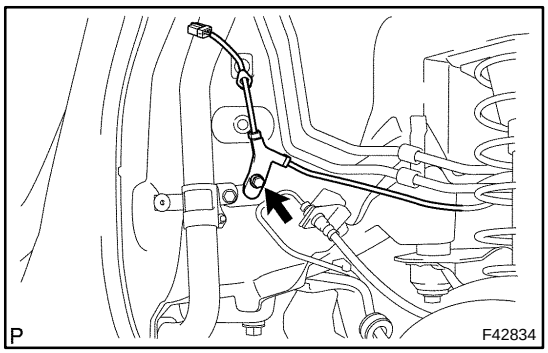

(c) Install the clamp with the bolt to the body, and install the grommet to the body.

Torque: 5.0 N·m (51 kgf·cm, 44 in.·lbf)

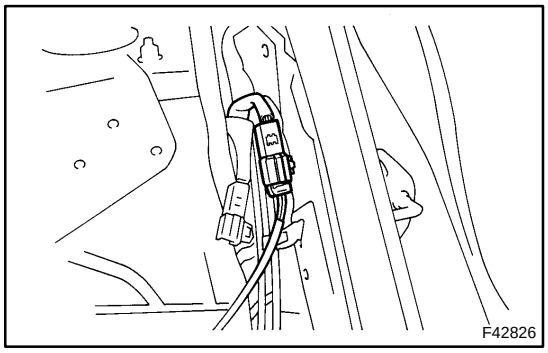

7. CONNECT SPEED SENSOR REAR LH

(a) Push in the wire harness with grommet, and connect the speed sensor connector.

8. INSTALL REAR SEAT BACK ASSY LH (See page 72–10)

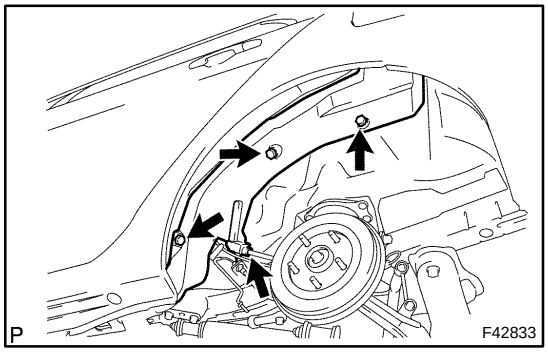

9. INSTALL FUEL TANK FILLER PIPE PROTECTOR

(a) Install the fuel tank filler pipe protector with the 3 bolts.

10. INSTALL REAR WHEEL

Torque: 103 N·m (1,050 kgf·cm, 76 ft·lbf)

11. CHECK ABS SPEED SENSOR SIGNAL (See page 05–316)

320J2–01

COMPONENTS

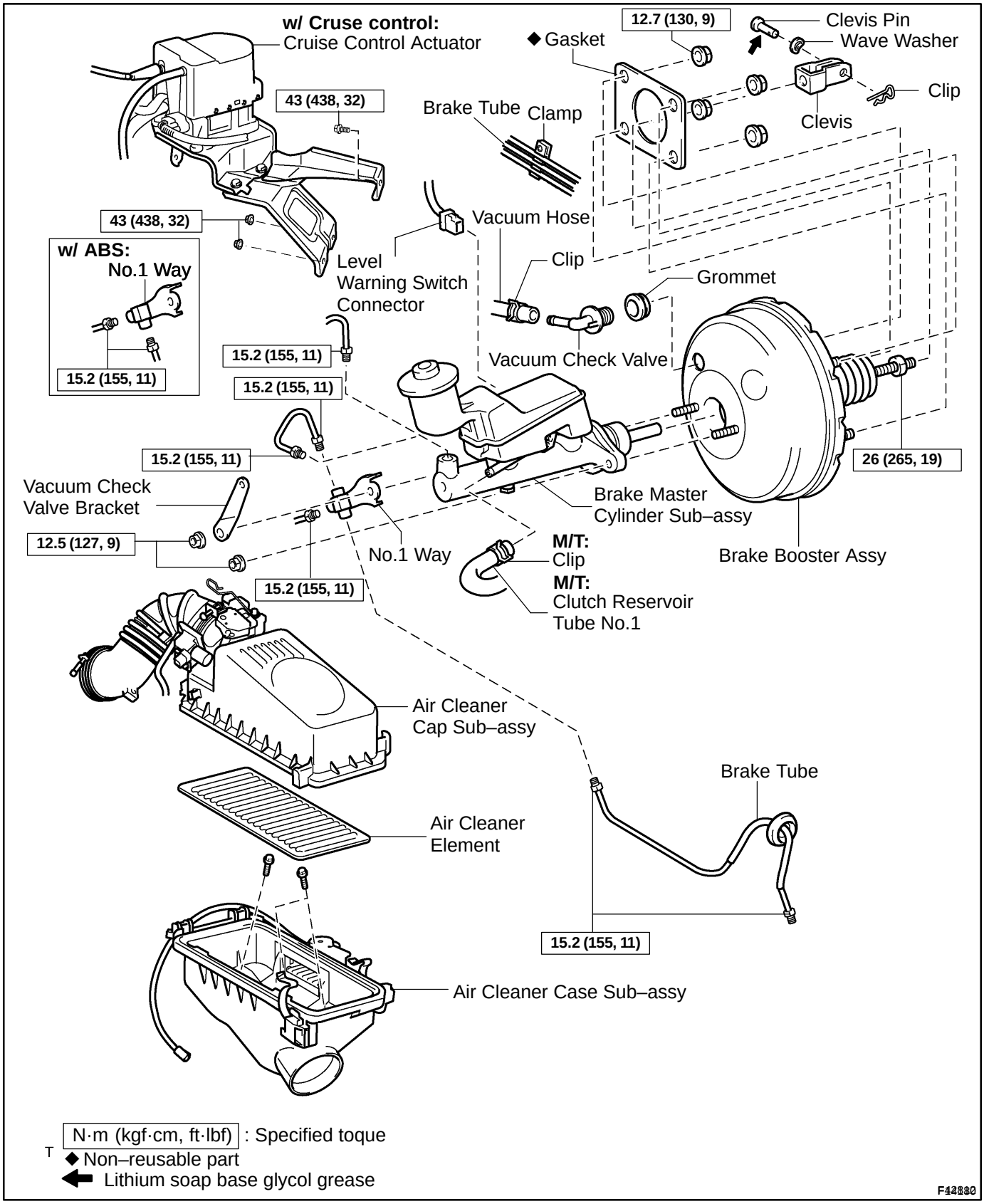

BRAKE BOOSTER ASSY

ON–VEHICLE INSPECTION

320J1–01

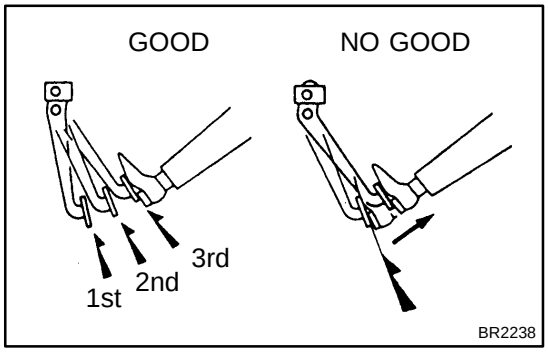

1. INSPECT BRAKE BOOSTER

(a) Airtightness check.

(1) Start the engine and stop it after 1 or 2 minutes. Depress the brake pedal several times slowly.

HINT:

If the pedal goes down farthest at the 1st time, but gradually rises after the 2nd or 3rd time, the booster is airtight.

(2) Depress the brake pedal while the engine is running, and stop the engine with the pedal depressed.

HINT:

If there is no change in the pedal reserve distance after holding the pedal for 30 seconds, the booster is airtight.

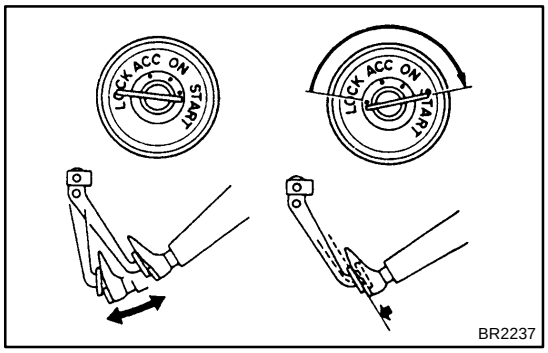

(b) Operating check.

(1) Depress the brake pedal several times with the ignition switch OFF and check that there is no change in the pedal reserve distance.

(2) Depress the brake pedal and start the engine.

HINT:

If the pedal goes down slightly, operation is normal.

2. INSPECT VACUUM CHECK VALVE

(a) Check vacuum check valve.

(1) Slide the clip and disconnect the vacuum hose.

(2) Remove the vacuum check valve.

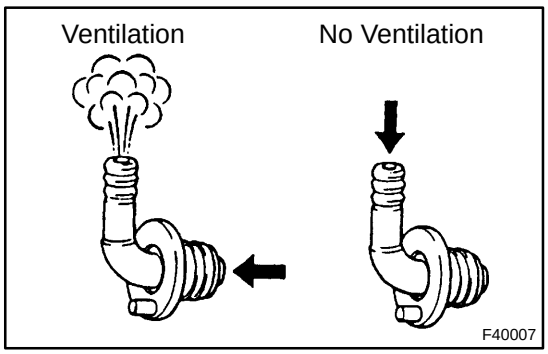

(3) Check that there is ventilation from the booster to engine, and no ventilation from the engine to the booster.

(4) If any fault is found, replace the vacuum check valve.

320J3–01

REPLACEMENT

1. DRAIN BRAKE FLUID

NOTICE:

Wash the brake fluid off immediately if it comes into contact with any painted surface.

2. REMOVE AIR CLEANER CAP SUB–ASSY

3. REMOVE AIR CLEANER CASE SUB–ASSY

(a) Remove the air cleaner element, then remove the 3 bolts and air cleaner case sub–assy.

4. REMOVE BRAKE MASTER CYLINDER SUB–ASSY (See page 32–15)

5. DISCONNECT BRAKE MASTER CYLINDER PUSH ROD CLEVIS

(a) Loosen the push rod clevis lock nut.

(b) Remove the clip, clevis pin and wave washer.

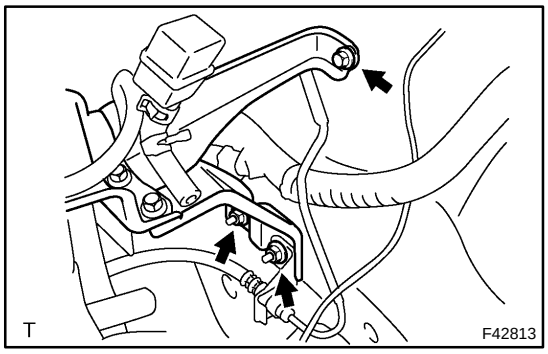

6. REMOVE CRUISE CONTROL ACTUATOR ASSY (W/ CRUISE CONTROL)

(a) Remove the 2 nuts and bolt from the cruise control actuator and bracket, and move cruise control actuator aside.

7. REMOVE FRONT WHEEL LH

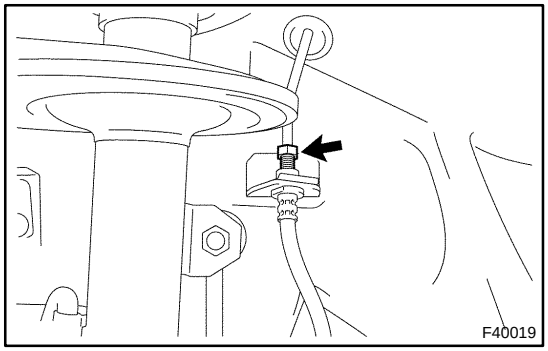

8. REMOVE BRAKE BOOSTER ASSY

(a) Using SST and spanner, disconnect the brake tube from the flexible hose, and remove the brake tube from the body.

SST 09023–00100

(b) Slide the clip, disconnect the vacuum hose from the brake booster assy.

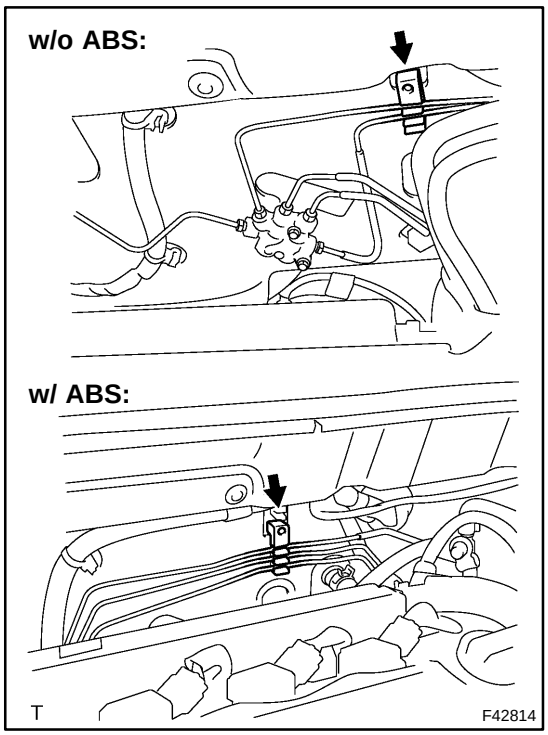

(c) Disconnect the 2 or 3 brake tubes from the clamp, and move brake tubes aside.

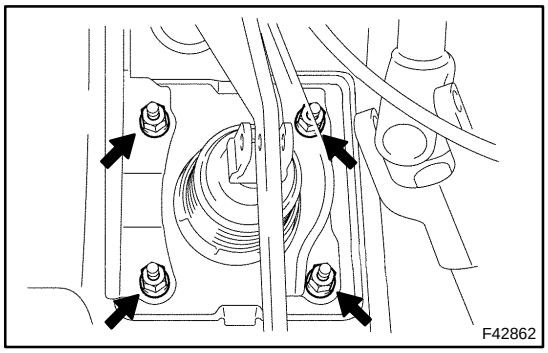

(d) Remove the 4 nuts and clevis.
(e) Pull out the brake booster and gasket.

9. INSTALL BRAKE BOOSTER ASSY

(a) Install the clevis to the booster push rod.

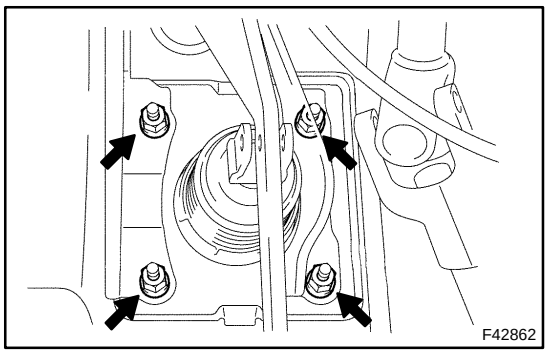

(b) Install a new gasket and brake booster with the 4 nuts.
Torque: 12.7 N·m (130 kgf·cm, 9 ft·lbf)

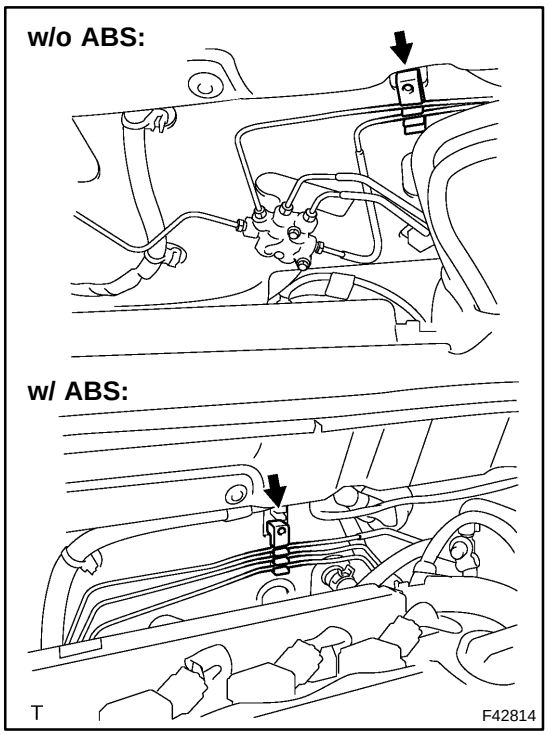

(c) Connect the 2 or 3 brake tubes to the clamp.
(d) Connect the vacuum hose to the brake booster.

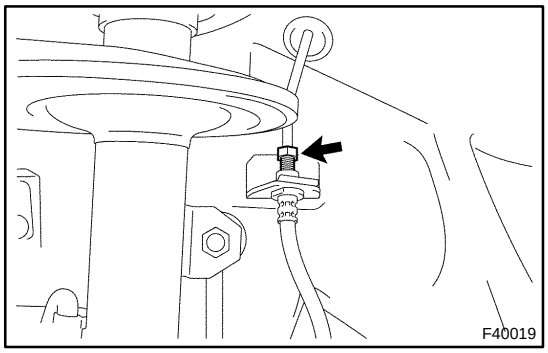

(e) Using SST and spanner, connect the brake tube to the flexible hose.
SST 09023–00100
Torque: 15.2 N·m (155 kgf·cm, 11 ft·lbf)

10. INSTALL FRONT WHEEL LH
Torque: 103 N·m (1,050 kgf·cm, 76 ft·lbf)

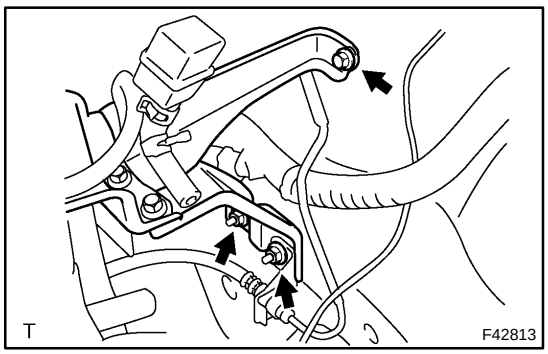

11. INSTALL CRUISE CONTROL ACTUATOR ASSY (W/ CRUISE CONTROL)
(a) Install the cruise control actuator and bracket with 2 nuts and bolt.
Torque: 43 N·m (438 kgf·cm, 32 ft·lbf)

12. CONNECT BRAKE MASTER CYLINDER PUSH ROD CLEVIS
(a) Apply the lithium soap base glycol grease to the push rod clevis pin.
(b) Connect the brake master cylinder push rod clevis with the push rod clevis pin, wave washer and clip.
13. INSTALL BRAKE MASTER CYLINDER SUB–ASSY (See page 32–15)

14. INSTALL AIR CLEANER CASE SUB–ASSY

(a) Install the air cleaner case with 3 bolts, then install the air cleaner element to the air cleaner case sub–assy.

15. INSTALL AIR CLEANER CAP SUB–ASSY

16. FILL RESERVOIR WITH BRAKE FLUID

17. BLEED MASTER CYLINDER (See page 32–6)

SST 09023–00100

18. BLEED BRAKE LINE (See page 32–6)

19. CHECK AND ADJUST BRAKE PEDAL HEIGHT (See page 32–8)

20. CHECK PEDAL FREE PLAY (See page 32–8)

21. CHECK PEDAL RESERVE DISTANCE (See page 32–8)

22. CHECK FLUID LEVEL IN RESERVOIR

23. CHECK BRAKE FLUID LEAKAGE

REAR DRUM BRAKE (1ZZ–FE(4WD))

COMPONENTS

320J8–01

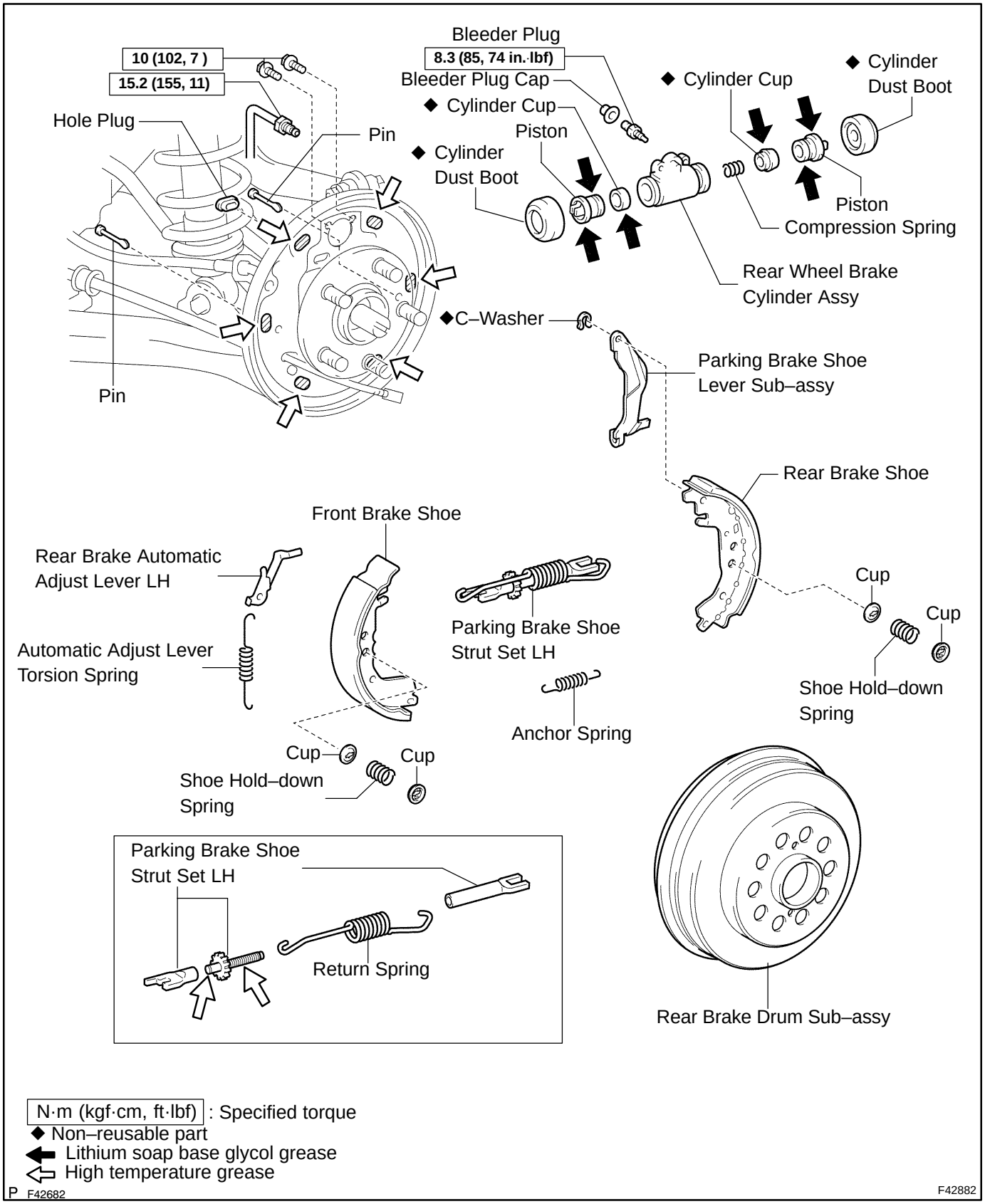

320J9–01

OVERHAUL

HINT:

Overhaul the RH side by the same procedures as LH side.

1. REMOVE REAR WHEEL

2. DRAIN BRAKE FLUID

NOTICE:

Wash the brake fluid off immediately if it comes into contact with any painted surface.

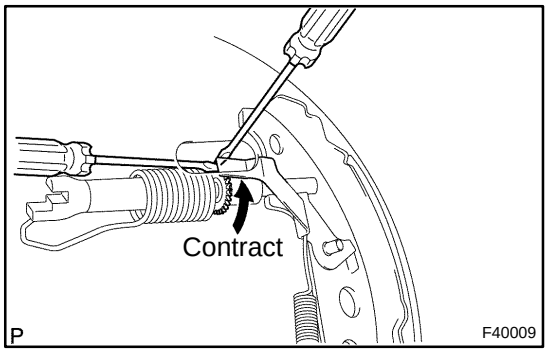

3. REMOVE REAR BRAKE DRUM SUB–ASSY

(a) Release the parking brake lever, and remove the brake drum.

HINT:

If the brake drum cannot be removed easily, do the following steps.

(b) Remove the hole plug and insert a screwdriver through the hole in the backing plate, and hold the automatic adjusting lever away from the adjuster.

(c) Using an another screwdriver, reduce the brake shoe adjuster by turning the adjusting wheel.

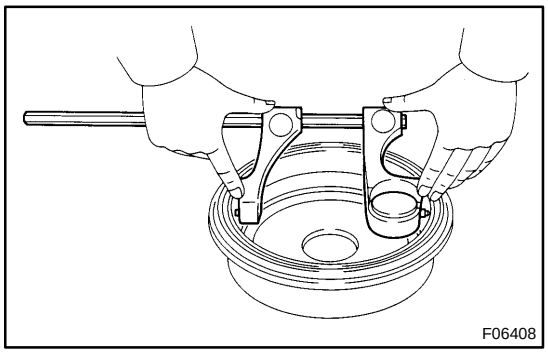

4. INSPECT BRAKE DRUM INSIDE DIAMETER

(a) Using a brake drum gauge or equivalent, measure the inside diameter of the drum.

Standard inside diameter: 228.6 mm (9.000 in.)

Maximum inside diameter: 229.6 mm (9.039 in.)

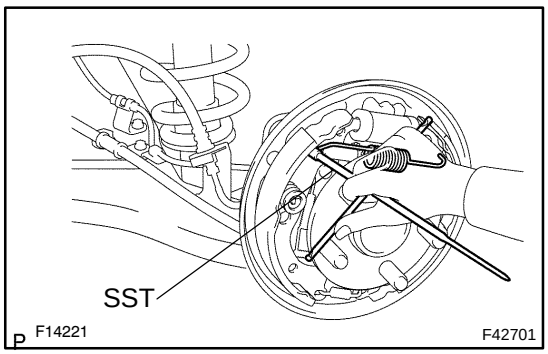

5. REMOVE FRONT BRAKE SHOE

(a) Using SST, disconnect the return spring from the front brake shoe.

SST 09703–30010

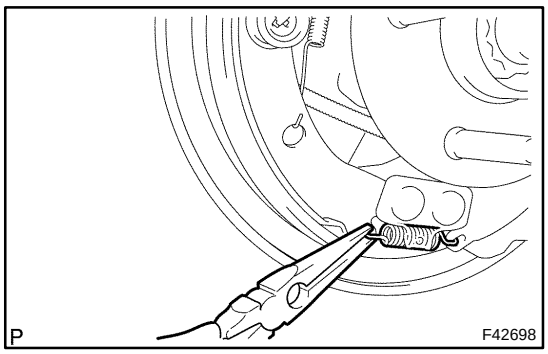

(b) Using a needle–nose pliers, remove the anchor spring.

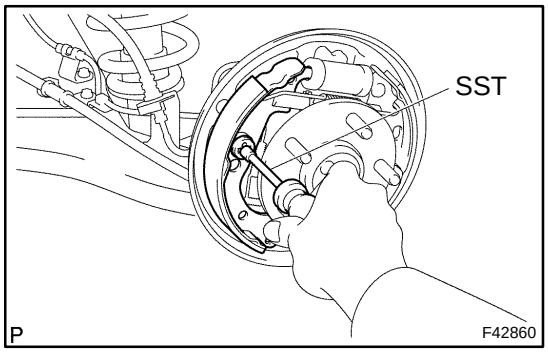

(c) Using SST, remove the 2 cups, shoe hold–down spring and pin, and remove the front brake shoe.
SST 09718–00010

6. REMOVE PARKING BRAKE SHOE STRUT SET LH

(a) Remove the parking brake shoe strut set LH with return spring from the rear brake shoe.

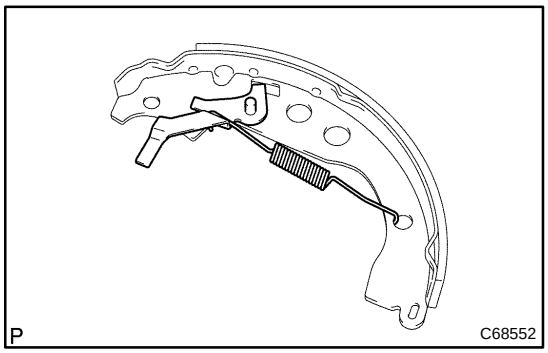

7. REMOVE REAR BRAKE AUTOMATIC ADJUST LEVER LH

(a) Remove the automatic adjust lever torsion spring and automatic adjust lever.

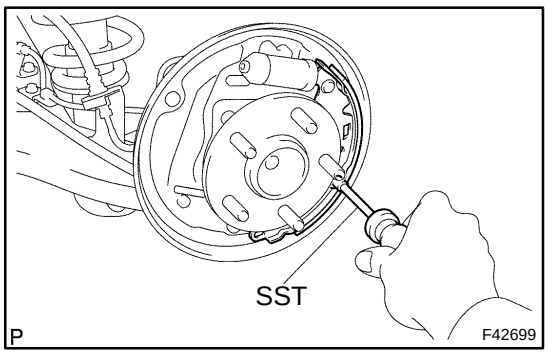

8. REMOVE REAR BRAKE SHOE

(a) Using SST, remove the 2 cups, shoe hold–down spring and pin.
SST 09718–00010

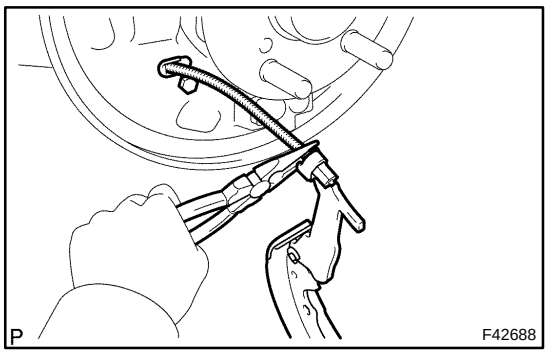

(b) Using a needle–nose pliers, disconnect the parking brake cable No.3 and remove the rear brake shoe.
(c) Remove the anchor spring from rear brake shoe.

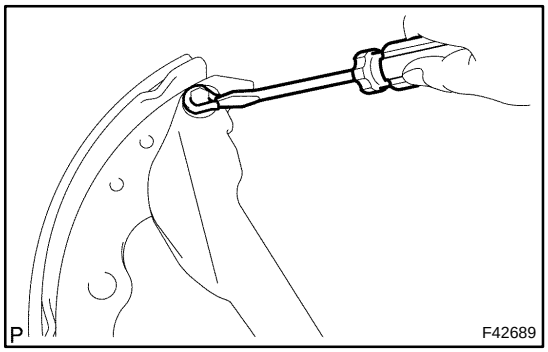

9. REMOVE REAR BRAKE PARKING BRAKE SHOE LEVER SUB–ASSY

(a) Using a screwdriver, remove the C–washer and parking brake shoe lever.

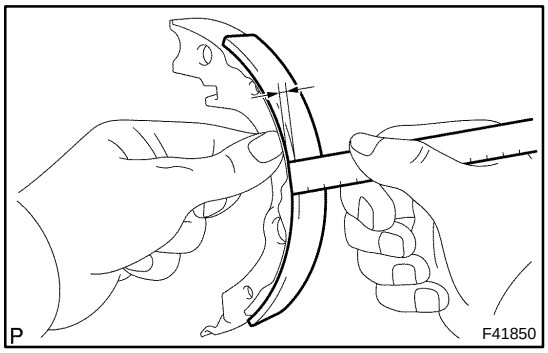

10. INSPECT REAR DRUM BRAKE SHOE LINING THICKNESS

(a) Using a ruler, measure the thickness of the shoe lining.
Standard thickness: 5.5 mm (0.217 in.)
Minimum thickness: 1.0 mm (0.039 in.)

If the lining thickness is at the minimum thickness or less, or if there is severe, uneven wear, replace the brake shoe.

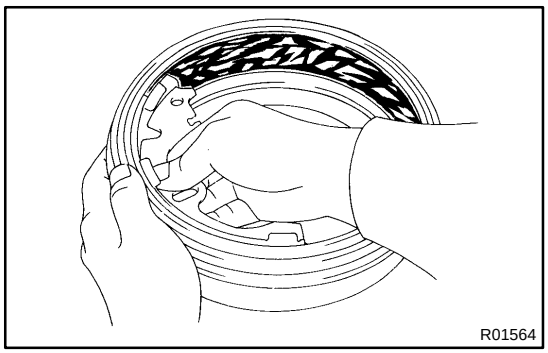

11. INSPECT BRAKE DRUM AND REAR DRUM BRAKE SHOE LINING FOR PROPER CONTACT

(a) Apply chalk to the inside surface of the drum, then grind drum on the brake shoe lining to fit.

If the contact between the drum and the shoe lining is improper, repair it using a brake shoe grinder or replace the brake shoe assembly.

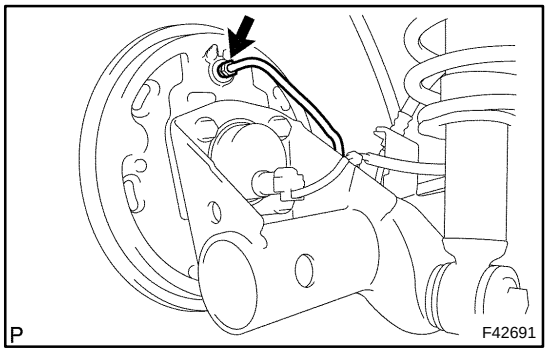

12. REMOVE LH, FRONT OR UPPER REAR WHEEL BRAKE CYLINDER ASSY

(a) Using SST, disconnect the brake tube, use a container to catch brake fluid.
SST 09023–00100
(b) Remove the 2 bolts and wheel cylinder.

13. REMOVE REAR WHEEL CYLINDER CUP KIT

(a) Remove the 2 cylinder boots from the wheel cylinder.
(b) Remove the 2 pistons and compression spring.
(c) Remove the 2 cups from each piston.
(d) Remove the bleeder plug cap and bleeder plug from the wheel cylinder.

14. INSPECT BRAKE WHEEL CYLINDER

(a) Check the cylinder bore and piston for rust or scoring.

15. INSTALL REAR WHEEL CYLINDER CUP KIT

(a) Temporarily tighten the bleeder plug to the wheel cylinder, and install the bleeder plug cap.

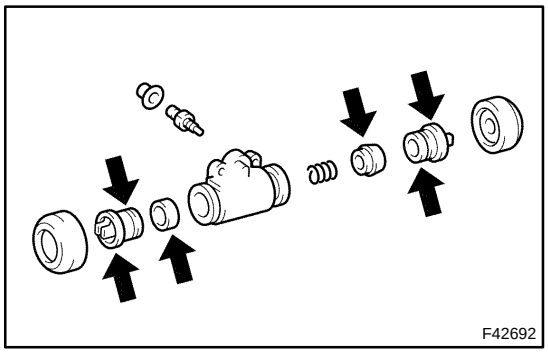

(b) Apply the lithium soap base glycol grease to the 2 new wheel cylinder cups and the 2 pistons.
(c) Install the 2 wheel cylinder cups to each piston.
(d) Install the compression spring and 2 pistons to the wheel cylinder.
(e) Install the 2 new cylinder dust boots to the wheel cylinder.

16. INSTALL LH, FRONT OR UPPER REAR WHEEL BRAKE CYLINDER ASSY

(a) Install the wheel cylinder with the bolt.
Torque: 10 N·m (102 kgf·cm, 7 ft·lbf)
(b) Using SST, connect the brake tube.
SST 09023–00100
Torque: 15.2 N·m (155 kgf·cm, 11 ft·lbf)

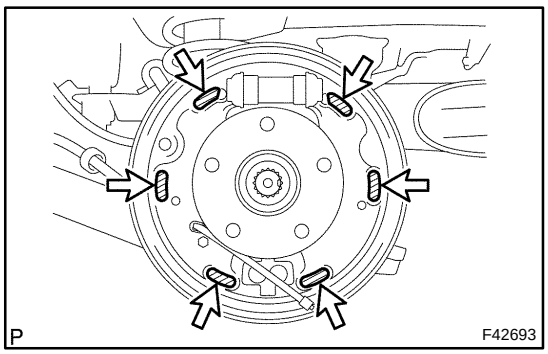

17. APPLICATION HIGH TEMPERATURE GREASE

(a) Apply the high temperature grease to the shoe attached surface of backing plate.

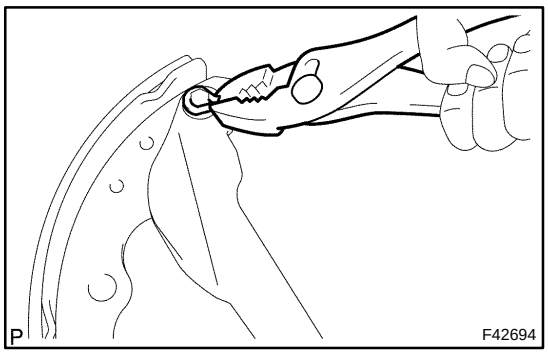

18. INSTALL REAR BRAKE PARKING BRAKE SHOE LEVER SUB–ASSY

(a) Using a pliers, install the parking brake shoe lever with a new C–washer.

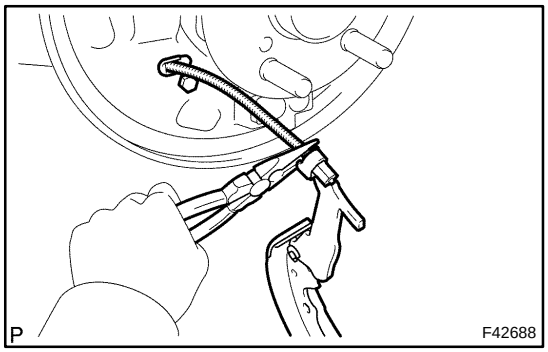

19. INSTALL REAR BRAKE SHOE

(a) Using a needle–nose pliers, connect the parking brake cable No.3 to the parking brake shoe lever.

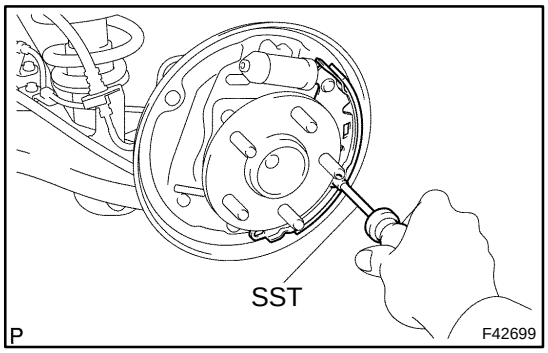

(b) Using SST, install the rear brake shoe, pin, shoe hold–down spring and 2 cups.
SST 09718–00010

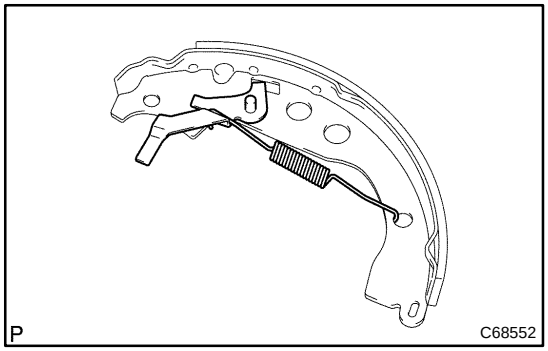

20. INSTALL REAR BRAKE AUTOMATIC ADJUST LEVER LH

(a) Install the automatic adjust lever and automatic adjust lever spring to the front brake shoe.

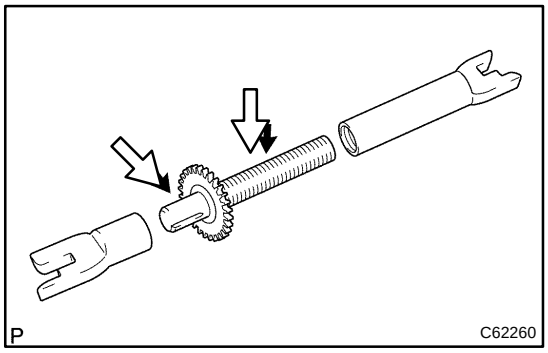

21. INSTALL PARKING BRAKE SHOE STRUT SET LH

(a) Apply the high temperature grease to the adjusting bolt.

(b) Install the parking brake shoe strut set LH with return spring.

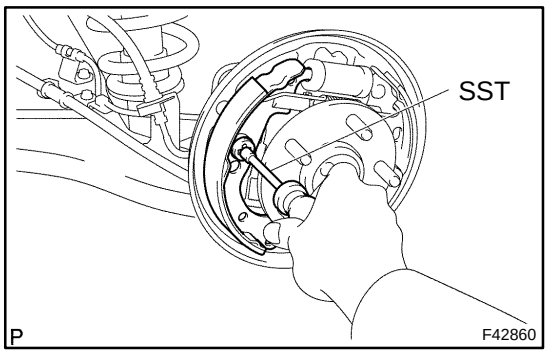

22. INSTALL FRONT BRAKE SHOE

(a) Using SST, install the front brake shoe, pin, shoe hold–down spring and 2 cups.
SST 09718–00010

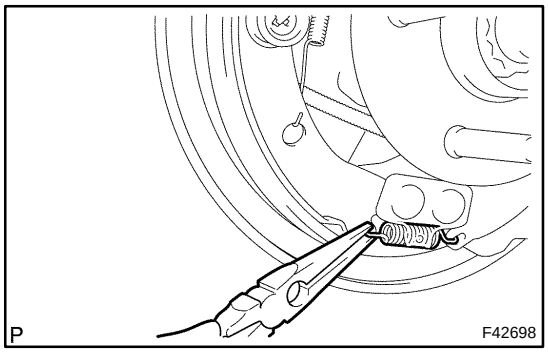

(b) Using a needle–nose pliers, install the anchor spring to each brake shoe.

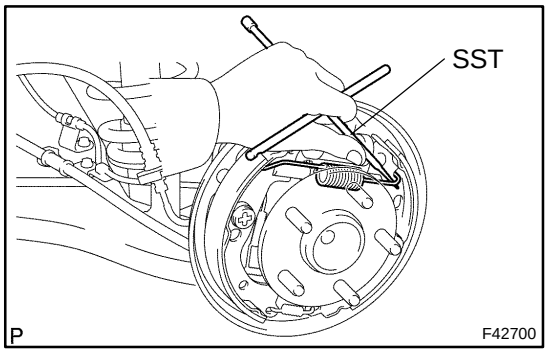

(c) Using SST, connect the return spring to each shoe.
SST 09703–30010

23. CHECK REAR DRUM BRAKE INSTALLATION

(a) Check that each part is installed properly.

NOTICE:

There should be no oil or grease adhering to the friction surfaces of the shoe lining and drum.

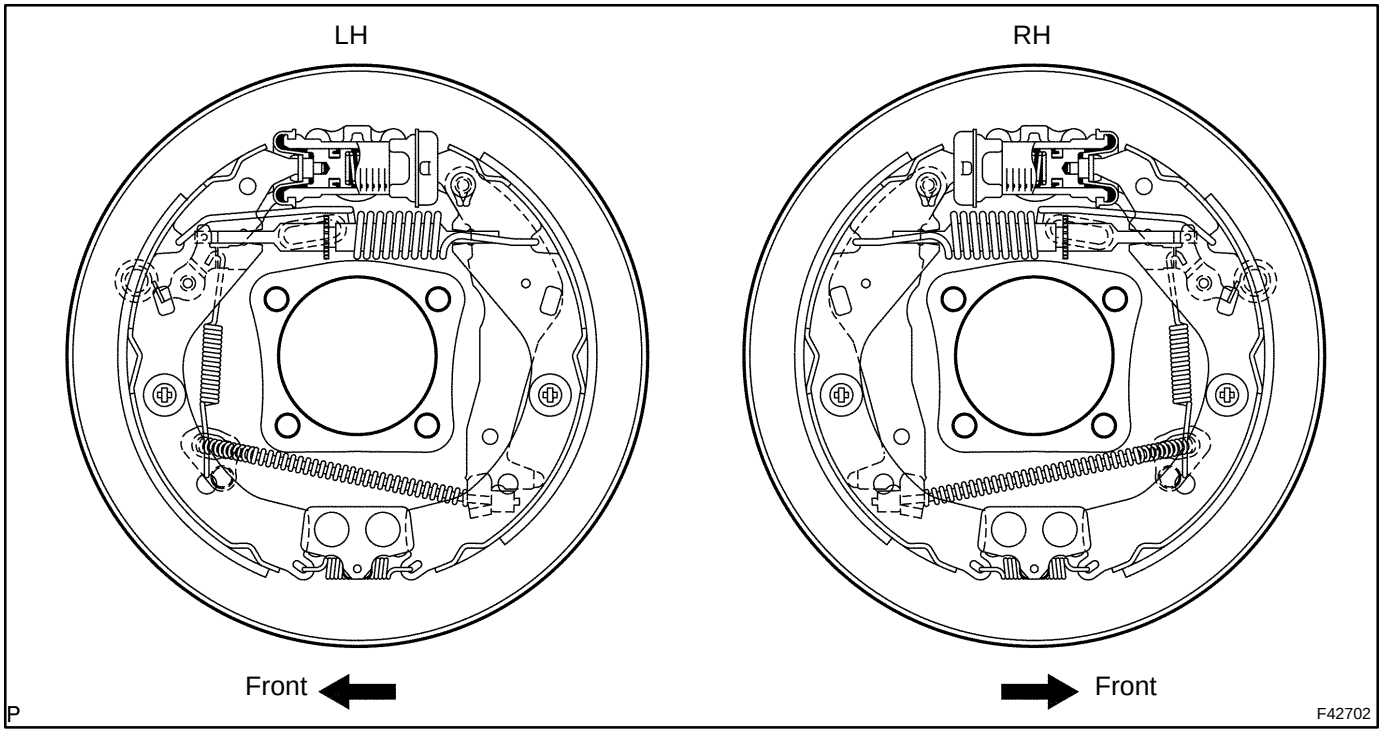

24. INSTALL REAR BRAKE DRUM SUB–ASSY

25. ADJUST REAR DRUM BRAKE SHOE CLEARANCE

(a) Temporarily install the hub nuts.

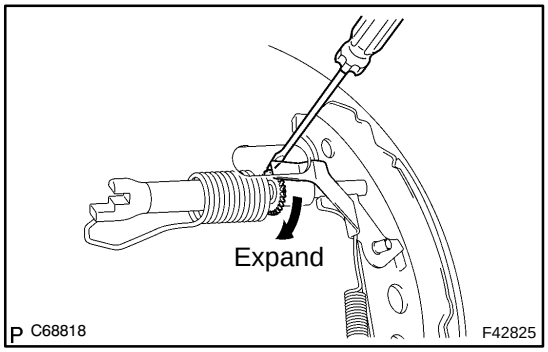

(b) Remove the hole plug, and turn the adjuster and expand the shoe until the drum locks.

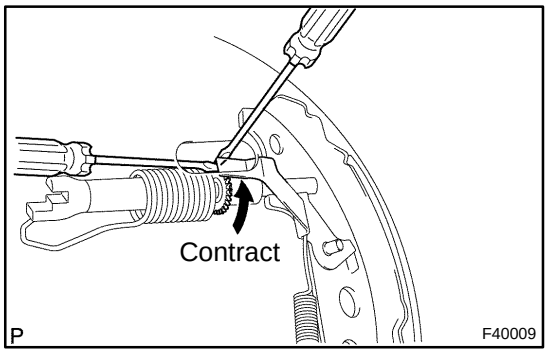

(c) Using a screwdriver, back off the adjuster 8 notches.

(d) Install the hole plug.

26. FILL RESERVOIR WITH BRAKE FLUID

27. BLEED MASTER CYLINDER (See page 32–6)

SST 09023–00100

28. BLEED BRAKE LINE (See page 32–6)

29. CHECK FLUID LEVEL IN RESERVOIR

30. CHECK BRAKE FLUID LEAKAGE

31. INSTALL REAR WHEEL

Torque: 103 N·m (1,050 kgf·cm, 76 ft·lbf)

32. INSPECT PARKING BRAKE LEVER TRAVEL (See page 33–2)

33. ADJUST PARKING BRAKE LEVER TRAVEL (See page 33–2)

BRAKE SYSTEM

320IT–01

PRECAUTION

- **Care must be taken to replace each part properly, because it could affect the performance of the brake system and result in a driving hazard. Replace the parts with the parts which have the same part number or equivalent.**
- **It is very important to keep parts and the area clean when repairing the brake system.**
- **If the vehicle is equipped with a mobile communication system, refer to the precaution in the introduction section.**

320IU–01

PROBLEM SYMPTOMS TABLE

Use the table below to help you find the cause of the problem. The numbers indicate the probability of the cause of the problem. Check each part in order. If necessary, replace these parts.

Symptom	Suspect Area	See page
Low pedal or spongy pedal	3. Fluid leaks for brake system	–
	4. Air in brake system	32–6
	5. Piston seals (Worn or damaged)	32–27
	Drum rear brake type (FF) :	32–33
	Drum rear brake type (4WD) :	32–41
	Disc rear brake type:	32–49
	6. Rear brake shoe clearance (Out of adjustment)	
	Drum rear brake type (FF) :	32–33
	Drum rear brake type (4WD) :	32–41
	7. Master cylinder (faulty)	32–15
	8. Booster push rod (Out of adjustment)	32–15
Brake drag	1. Brake pedal free play (Minimal)	32–8
	2. Parking brake lever travel (Out of adjustment)	33–2
	3. Parking brake wire (Sticking) FF:	33–8
		33–11
	4WD:	33–8
		33–15
	4. Rear brake shoe clearance (Out of adjustment)	
	Drum rear brake type (FF) :	32–33
	Drum rear brake type (4WD) :	32–41
	Disc rear brake type:	33–18
	5. Pad or lining (Cracked or distorted)	
	Drum rear brake type (FF) :	32–27
		32–33
	Drum rear brake type (4WD) :	32–27
		32–41
	Disc rear brake type:	32–27
		32–49
	6. Piston (Stuck) Drum rear brake type (FF) :	32–27
		32–33
	Drum rear brake type (4WD) :	32–27
		32–41
	Disc rear brake type:	32–27
		32–49
	7. Piston (Frozen) Drum rear brake type (FF) :	32–27
		32–33
	Drum rear brake type (4WD) :	32–27
		32–41
	Disc rear brake type:	32–27
		32–49
	8. Tension or return spring (Faulty)	
	Drum rear brake type (FF) :	32–33
	Drum rear brake type (4WD) :	32–41
	Disc rear brake type	33–18
	9. Booster push rod (Out adjustment)	32–15
	10. Vacuum leaks for booster system	32–20
	11. Master cylinder (Faulty)	32–15

Brake pull	1. Piston (Stuck)	Drum rear brake type (FF) :	32–27 32–33
		Drum rear brake type (4WD) :	32–27 32–41
		Disc rear brake type:	32–27 32–49
	2. Pad or lining (Oily)	Drum rear brake type (FF) :	32–27 32–33
		Drum rear brake type (4WD) :	32–27 32–41
		Disc rear brake type:	32–27 32–49
	3. Piston (Frozen)	Drum rear brake type (FF) :	32–27 32–33
		Drum rear brake type (4WD) :	32–27 32–41
		Disc rear brake type:	32–27 32–49
	4. Disc (Scored)		32–27 32–49
	5. Pad or lining (Cracked or distorted)		
		Drum rear brake type (FF) :	32–27 32–33
		Drum rear brake type (4WD) :	32–27 32–41
		Disc rear brake type:	32–27 32–49

	1. Fluid leaks for brake system	–
	2. Air in brake system	32–6
	3. Pad or lining (Worn) Drum rear brake type (FF) :	32–27 32–33
	Drum rear brake type (4WD) :	32–27 32–41
	Disc rear brake type:	32–27 32–49
	4. Pad or lining (Cracked or distorted)	
	Drum rear brake type (FF) :	32–27 32–33
	Drum rear brake type (4WD) :	32–27 32–41
	Disc rear brake type:	32–27 32–49
	5. Rear brake shoe clearance (Out of adjustment)	
	Drum rear brake type (FF) :	32–33
	Drum rear brake type (4WD) :	32–41
	Disc rear brake type:	33–18
Hard pedal but brake inefficient	6. Pad or lining (Oily) Drum rear brake type (FF) :	32–27 32–33
	Drum rear brake type (4WD) :	32–27 32–41
	Disc rear brake type:	32–27 32–49
	7. Pad or lining (Glanzed) Drum rear brake type (FF) :	32–27 32–33
	Drum rear brake type (4WD) :	32–27 32–41
	Disc rear brake type:	32–27 32–49
	8. Disc (Scored) Drum rear brake type (FF) :	32–27 32–33
	Drum rear brake type (4WD) :	32–27 32–41
	Disc rear brake type:	32–27 32–49
	9. Booster push rod (Out of adjustment)	32–15
	10.Vacuum leaks for booster system	32–20

Noise from brakes	1. Pad or lining (Cracked or distorted)		
		Drum rear brake type (FF) :	32–27 32–33
		Drum rear brake type (4WD) :	32–27 32–41
		Disc rear brake type:	32–27 32–49
	2. Installation bolt (Loose)	Drum rear brake type (FF) :	32–27 32–33
		Drum rear brake type (4WD) :	32–27 32–41
		Disc rear brake type:	32–27 32–49
	3. Disc (Scored)	Drum rear brake type (FF) :	32–27 32–33
		Drum rear brake type (4WD) :	32–27 32–41
		Disc rear brake type:	32–27 32–49
	4. Pad support plate (Loose)		32–27 32–49
	5. Sliding pin (Worn)	Drum rear brake type (FF) :	32–27 32–33
		Drum rear brake type (4WD) :	32–27 32–41
		Disc rear brake type:	32–27 32–49
	6. Pad or lining (dirty)	Drum rear brake type (FF) :	32–27 32–33
		Drum rear brake type (4WD) :	32–27 32–41
		Disc rear brake type:	32–27 32–49
	7. Pad or lining (Glanzed)	Drum rear brake type (FF) :	32–27 32–33
		Drum rear brake type (4WD) :	32–27 32–41
		Disc rear brake type:	32–27 32–49
	8. Anchor, return or tension spring (Faulty)		
		Drum rear brake type (FF) :	32–33
		Drum rear brake type (4WD) :	32–41
		Disc rear brake type:	33–18
	9. Anti–squeal shim (Damaged)		
		Drum rear brake type (FF) :	32–27 32–33
		Drum rear brake type (4WD) :	32–27 32–41
		Disc rear brake type:	32–27 32–49
	10.Shoe hold–down spring (Damaged)		
		Drum rear brake type (FF) :	32–33
		Drum rear brake type (4WD) :	32–41
		Disc rear brake type:	33–18

BRAKE FLUID

320IV–01

BLEEDING

NOTICE:

Wash the brake fluid off immediately if it comes into contact with any painted surface.

HINT:

If any work is done on the brake system or if air in the brake lines is suspected, bleed the air from the system.

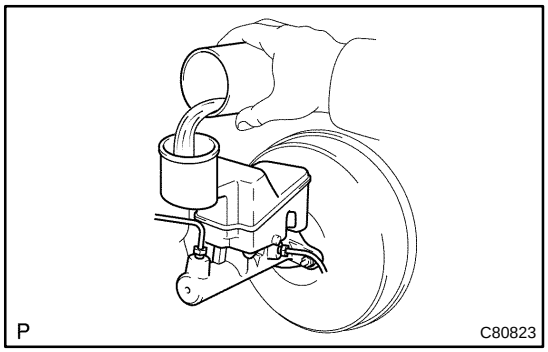

1. FILL RESERVOIR WITH BRAKE FLUID
Fluid: SAE J1703 or FMVSS No. 116 DOT3

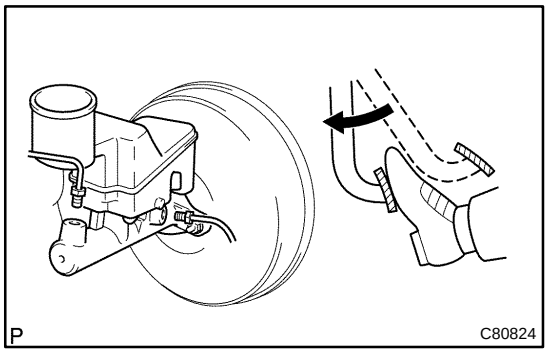

2. BLEED MASTER CYLINDER

HINT:

If the master cylinder has been disassembled or if the reservoir becomes empty, bleed the air from the master cylinder.

(a) Disconnect the brake lines from the master cylinder.
SST 09023–00100

(b) Slowly depress the brake pedal and hold it.

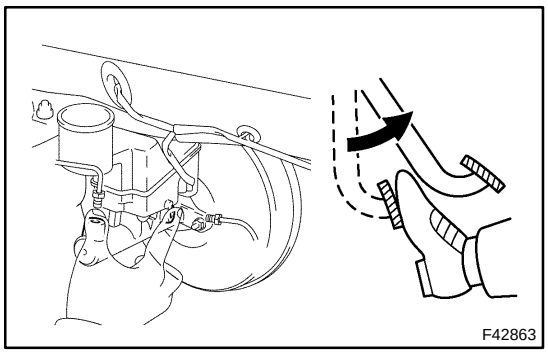

(c) Block off the outer holes with your fingers, and release the brake pedal.

(d) Repeat (b) and (c) 3 or 4 times.

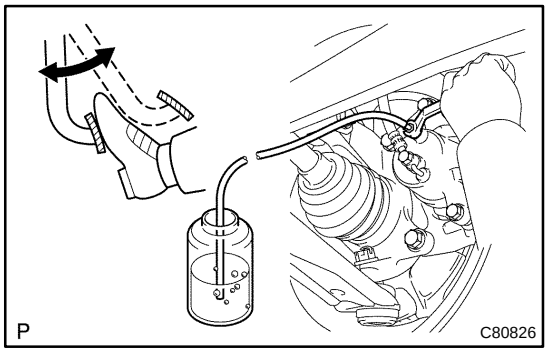

3. BLEED BRAKE LINE

(a) Connect the vinyl tube to the brake caliper.

(b) Depress the brake pedal several times, then loosen the bleeder plug with the pedal held down.

(c) At the point when fluid stops coming out, tighten the bleeder plug, then release the brake pedal.
Torque: 8.3 N·m (85 kgf·cm, 74 in.·lbf)

(d) Repeat (b) and (c) until all the air in the fluid has been bled out.

(e) Repeat the above procedures to bleed the air out of the brake line for each wheel.

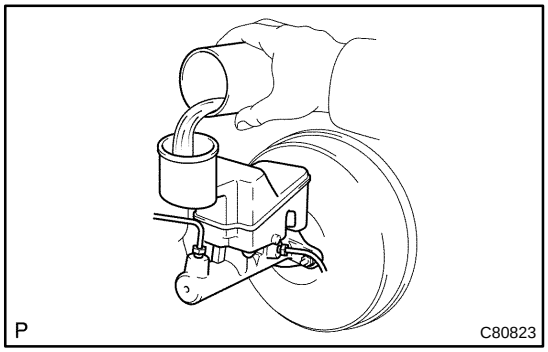

4. CHECK FLUID LEVEL IN RESERVOIR

(a) Check the fluid level and add fluid if necessary.
Fluid: SAE J1703 or FMVSS No. 116 DOT3

BRAKE MASTER CYLINDER SUB–ASSY

320IZ–01

COMPONENTS

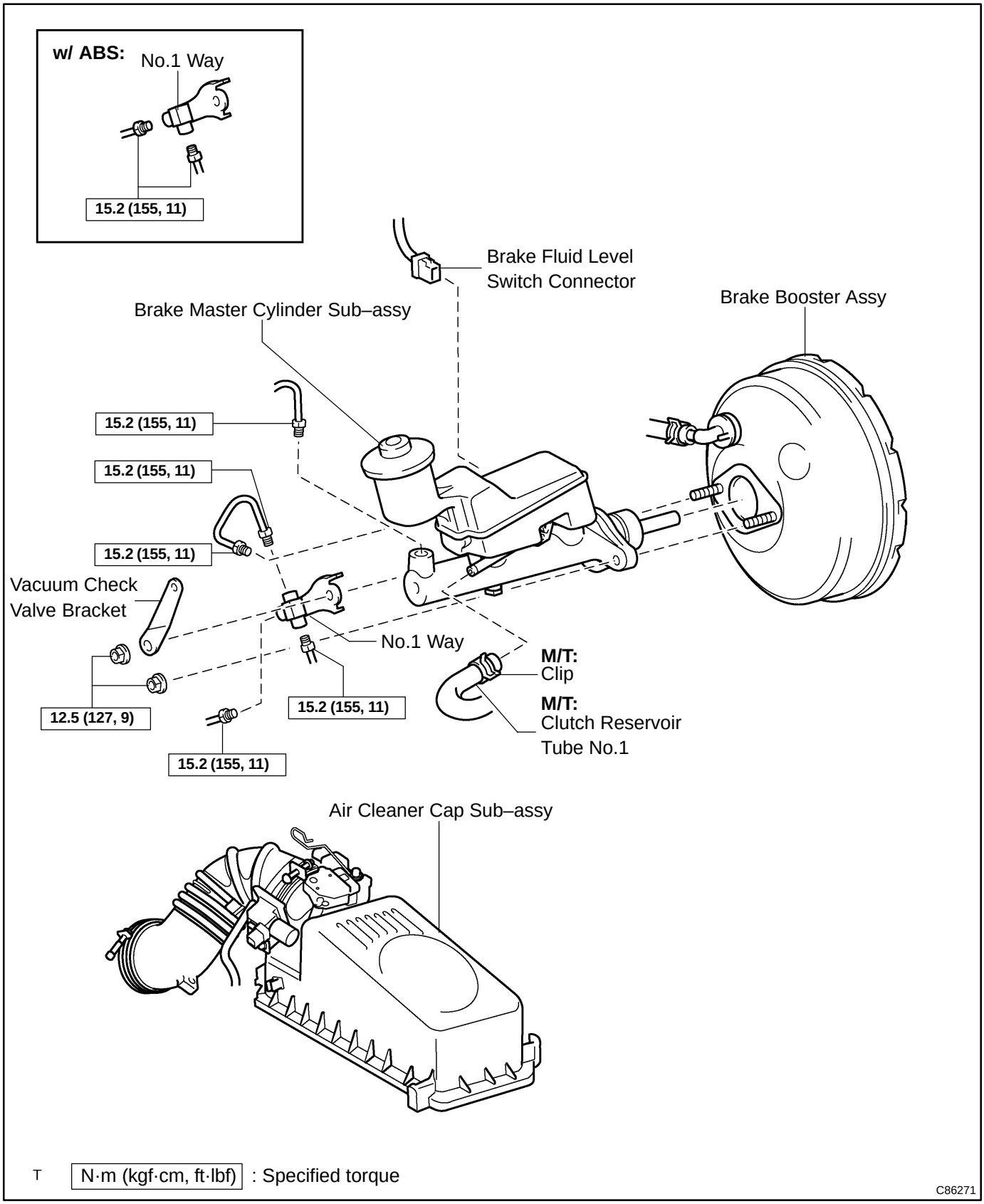

T N·m (kgf·cm, ft·lbf) : Specified torque

C86271

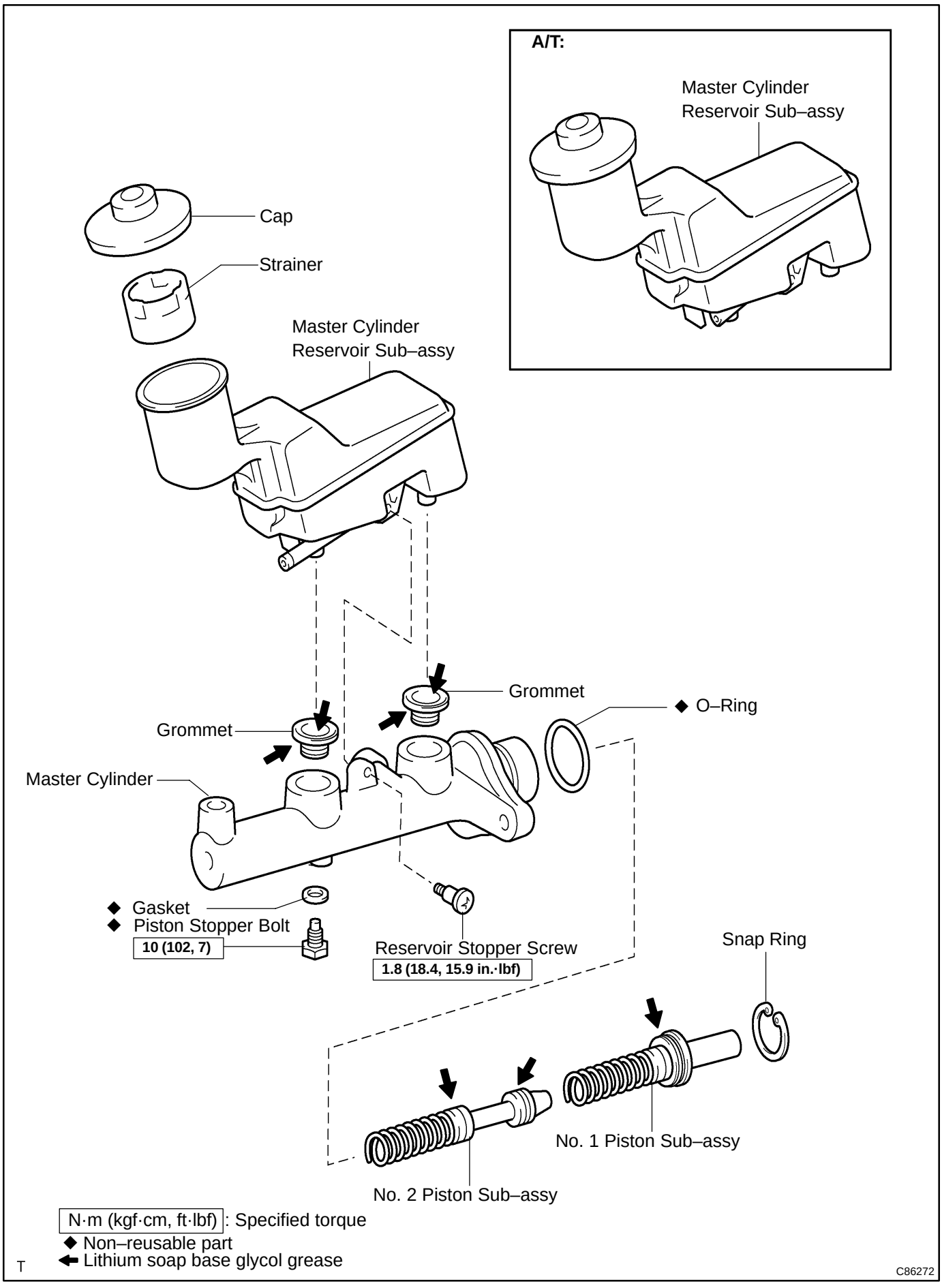
A/T:
Master Cylinder Reservoir Sub–assy
Cap
Strainer
Master Cylinder Reservoir Sub–assy
Grommet
◆ O–Ring
Grommet
Master Cylinder
◆ Gasket
◆ Piston Stopper Bolt
10 (102, 7)
Reservoir Stopper Screw
1.8 (18.4, 15.9 in.·lbf)
Snap Ring
No. 1 Piston Sub–assy
No. 2 Piston Sub–assy
N·m (kgf·cm, ft·lbf): Specified torque
◆ Non–reusable part
Lithium soap base glycol grease
T
C86272

320J0–01

OVERHAUL

1. DRAIN BRAKE FLUID

NOTICE:

Wash the brake fluid off immediately if it comes into contact with any painted surface.

2. REMOVE AIR CLEANER CAP SUB–ASSY

3. REMOVE BRAKE MASTER CYLINDER SUB–ASSY

(a) Disconnect the brake fluid level switch connector from the master cylinder reservoir sub–assy.

(b) M/T:
Slide the clip and disconnect the clutch reservoir tube No.1.

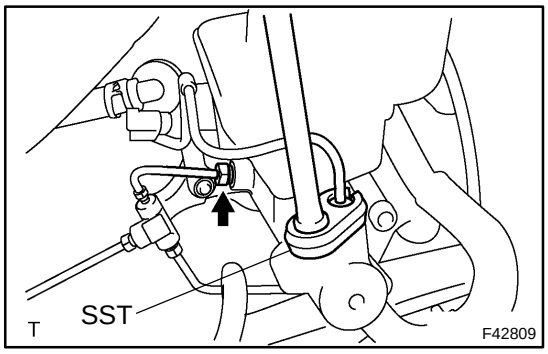

(c) Using SST, disconnect the 2 brake tubes from the master cylinder.
SST 09023–00100

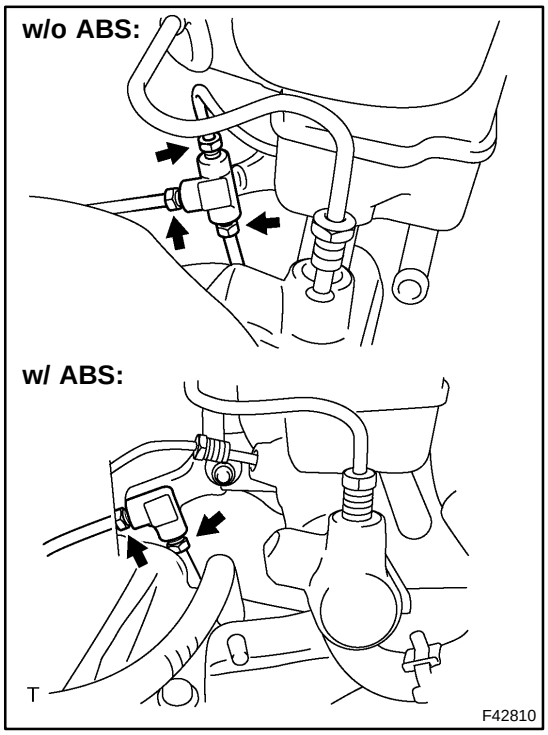

(d) Using SST, disconnect the 2 or 3 brake tubes from the No.1 way.
SST 09023–00100

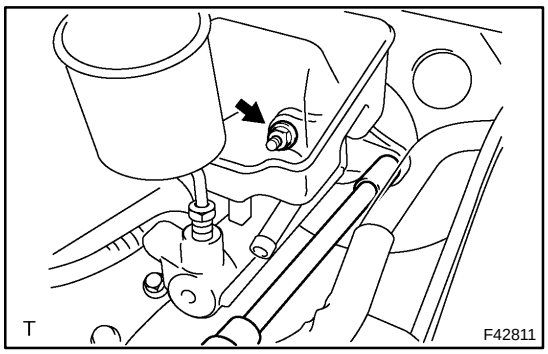

(e) Remove the 2 nuts, and pull out the master cylinder, No.1 way and vacuum check valve bracket.

4. REMOVE BRAKE MASTER CYLINDER RESERVOIR SUB–ASSY

(a) Remove the reservoir stopper screw and master cylinder reservoir sub–assy.

(b) Remove the 2 cylinder reservoir grommets.

5. REMOVE BRAKE MASTER CYLINDER KIT

(a) Hold the master cylinder in the vise with the 2 aluminum plates in between.

(b) Remove the O–ring.

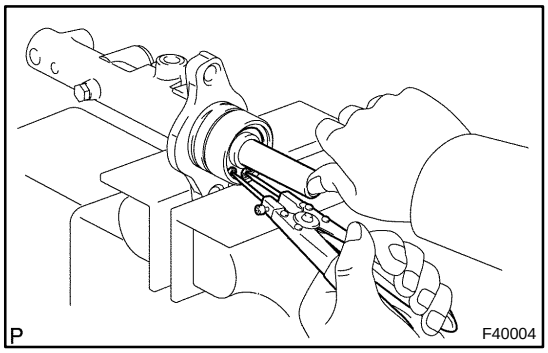

(c) Push in the piston and remove the snap ring with snap ring pliers.

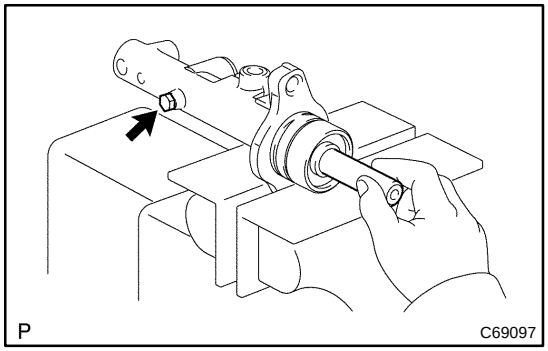

(d) Push in the piston and remove the piston stopper bolt and gasket.

(e) Remove the No.1 piston sub–assy by hand, pulling straight out not at an angle.

NOTICE:

If being pulled out at an angle, the piston may damage the cylinder bore.

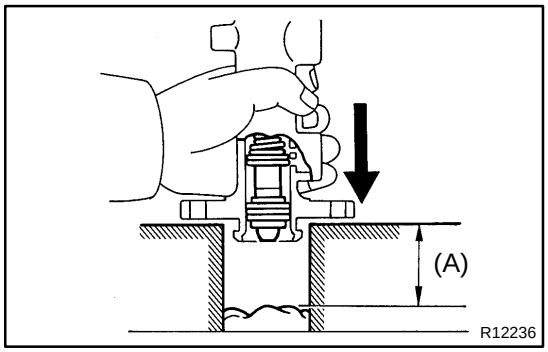

(f) Place a cloth and 2 wooden blocks on the work table and lightly edges until the No.2 piston sub–assy drops out of the cylinder.

NOTICE:

If being pulled out at an angle, the piston may damage the cylinder bore.

HINT:

Make sure that the distance (A) from the cloth to the top of the blocks is at least 100 mm (3.94 in.).

6. INSPECT BRAKE MASTER CYLINDER

(a) Check the cylinder bore for rust or scoring.

7. INSTALL BRAKE MASTER CYLINDER KIT

(a) Hold the master cylinder in the vise with the 2 aluminum plates in between.

(b) Apply the lithium soap base glycol grease to the No.1 and No.2 piston sub–assy.

(c) Install the No.2 and No.1 piston sub–assy to the master cylinder.

NOTICE:

- **If being inserted at an angle, the piston may damage the cylinder bore.**
- **Be careful not to damage the rubber lips on the pistons.**

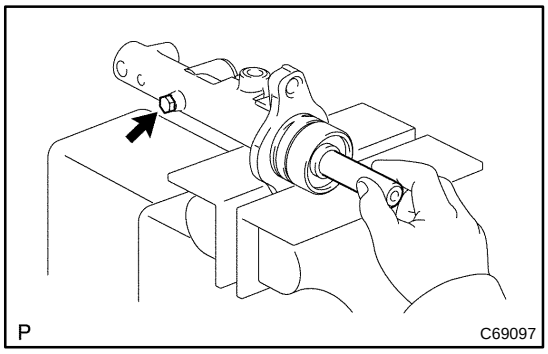

(d) Push in the piston and install a new gasket and a new piston stopper bolt.
Torque: 10 N·m (102 kgf·cm, 7 ft·lbf)

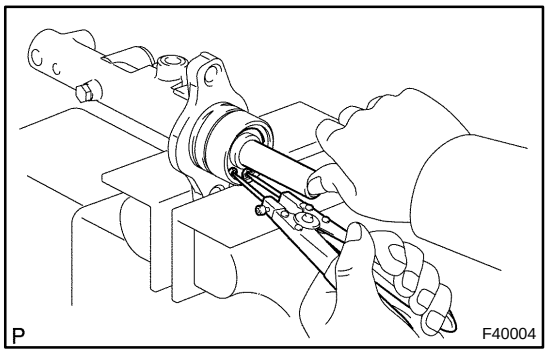

(e) Push in the piston and install the snap ring with snap ring pliers.

(f) Apply the lithium soap base glycol grease to a new O–ring, and install the O–ring to the master cylinder.

8. INSTALL BRAKE MASTER CYLINDER RESERVOIR SUB–ASSY

(a) Apply the lithium soap base glycol grease to 2 brake master cylinder reservoir grommets.

(b) Install the master cylinder reservoir with the screw.
Torque: 1.8 N·m (18.4 kgf·cm, 15.9 in.·lbf)

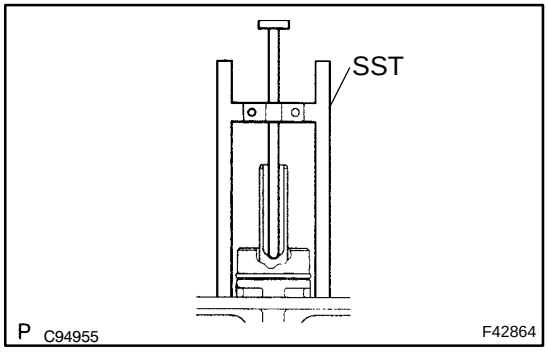

9. INSPECT AND ADJUST BRAKE BOOSTER PUSH ROD

(a) Apply the chalk to the flat surfaced tip of the SST pin.

(b) Set SST on the master cylinder and lower the pin of the SST until it slightly touches the piston.
SST 09737–00012

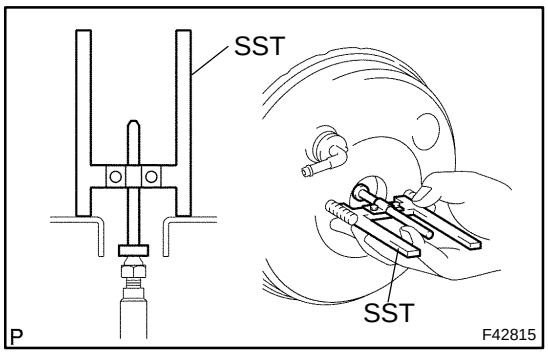

(c) Turn SST upside down and place it on the brake booster.
SST 09737–00012
Clearance: 0 mm (0 in.)

HINT:

- If there is a space between the SST main body and the booster shell (chalk is applied to the booster push rod), it means that the clearance is too small.
- If chalk is not applied to the booster push rod after placing the SST on the brake booster, it means that the clearance is too large.

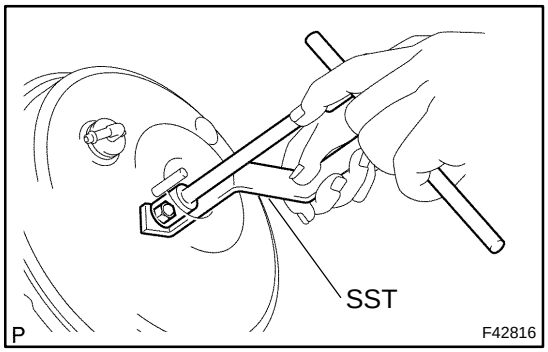

(d) If clearance is outside of the specified range, fix the push rod using SST and adjust the length of the protruding adjusting bolt.
SST 09737–00020

HINT:

When adjusting the push rod, depress the brake pedal sufficiently so that the push rod sticks out.

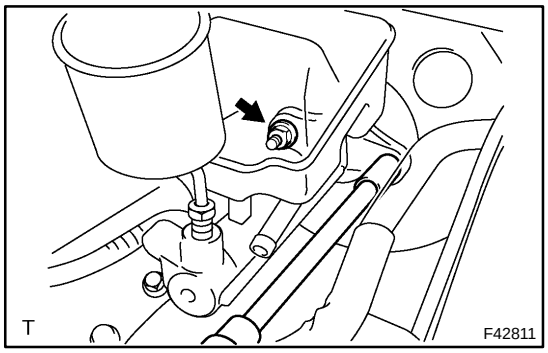

10. INSTALL BRAKE MASTER CYLINDER SUB–ASSY

(a) Install the master cylinder, No.1 way and vacuum check valve bracket with the 2 nuts.
Torque: 12.5 N·m (127 kgf·cm, 9 ft·lbf)

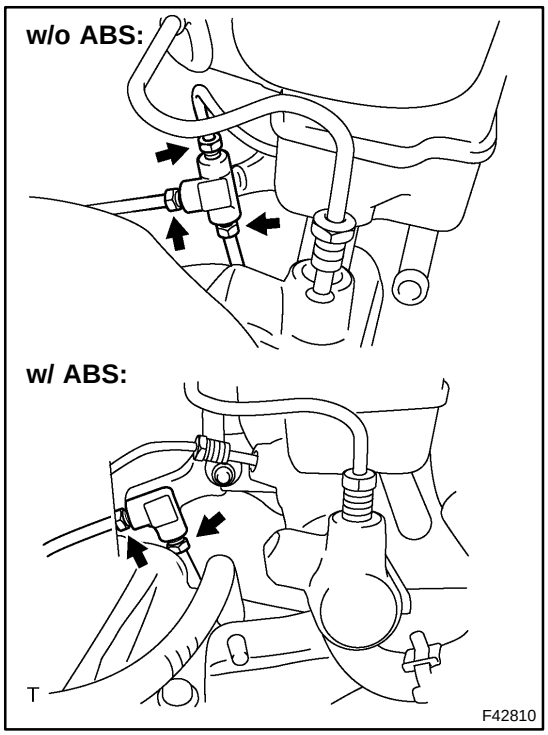

(b) Using SST, connect the 2 or 3 brake tubes to the No.1 way.
SST 09023–00100
Torque: 15.2 N·m (155 kgf·cm, 11 ft·lbf)

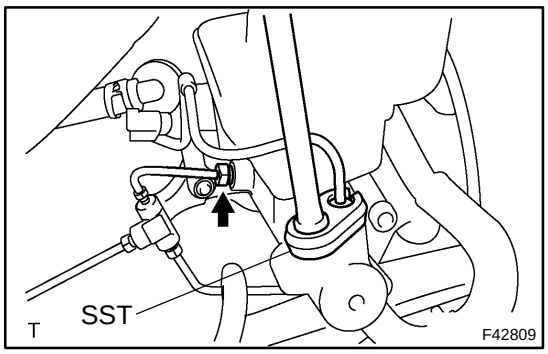

(c) Using SST, connect the 2 brake tubes to the master cylinder.
SST 09023–00100
Torque: 15.2 N·m (155 kgf·cm, 11 ft·lbf)

(d) M/T:
Connect the clutch reservoir tube No.1 to the master cylinder reservoir sub–assy with the clip.

(e) Connect the brake fluid level switch connector to the master cylinder reservoir sub–assy.

11. INSTALL AIR CLEANER CAP SUB–ASSY
12. FILL RESERVOIR WITH BRAKE FLUID
13. BLEED MASTER CYLINDER (See page 32–6)
SST 09023–00100
14. BLEED BRAKE LINE (See page 32–6)
15. CHECK FLUID LEVEL IN RESERVOIR
16. CHECK BRAKE FLUID LEAKAGE

FRONT BRAKE

COMPONENTS

320J4–01

1ZZ–FE(FF) Type:

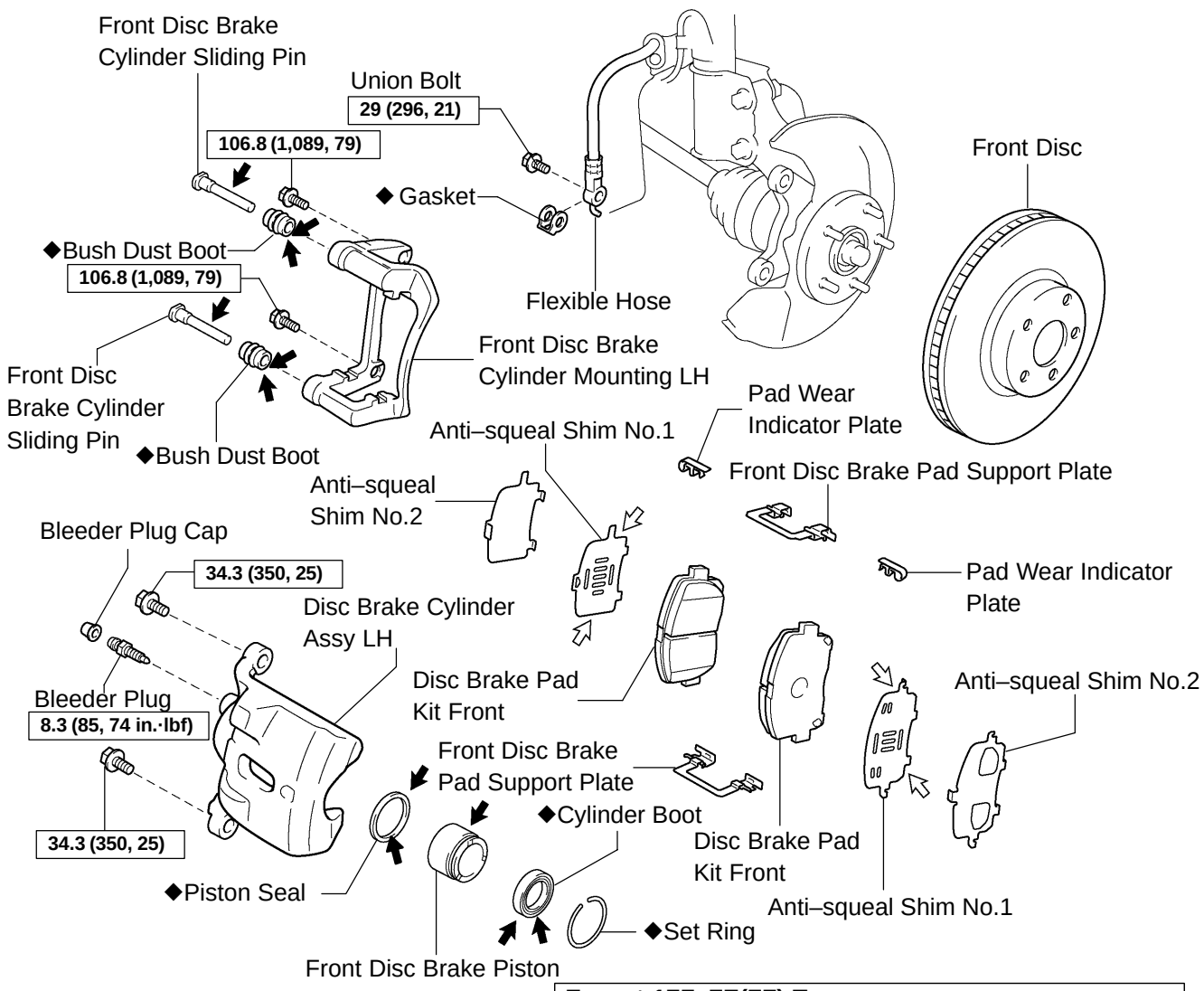

Except 1ZZ–FE(FF) Type:

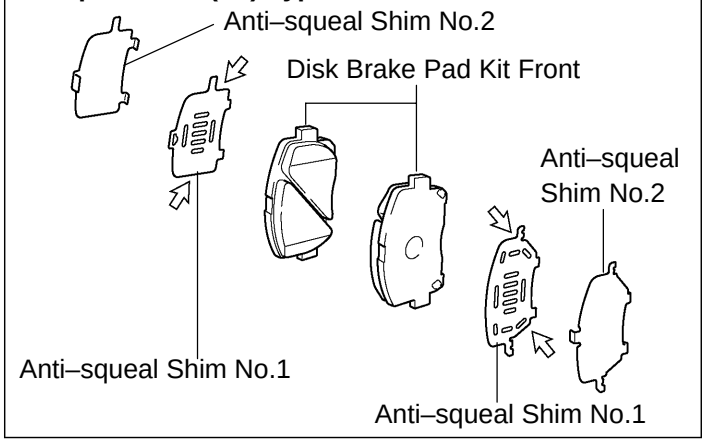

N·m (kgf·cm, ft·lbf) : Specified torque
◆ Non–reusable part
⬅ Lithium soap base glycol grease
⇦ Disc brake grease

N

C86273

320J5–01

OVERHAUL

HINT:

Overhaul the RH side by the same procedure as the LH side.

1. REMOVE FRONT WHEEL

2. DRAIN BRAKE FLUID

NOTICE:

Wash the brake fluid off immediately if it comes into contact with any painted surface.

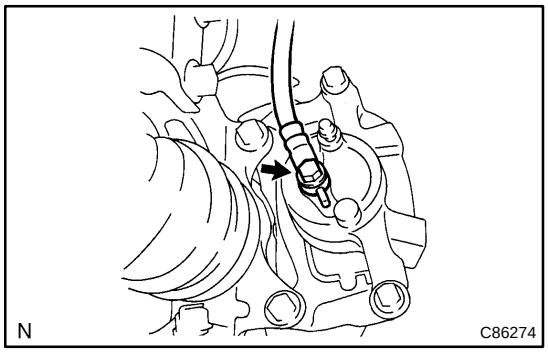

3. REMOVE FRONT DISC BRAKE CYLINDER SUB–ASSY

(a) Remove the union bolt and gasket from the disc brake cylinder, then disconnect the flexible hose.

HINT:

Gasket has 2 types: 2–piece type and 1–piece type.

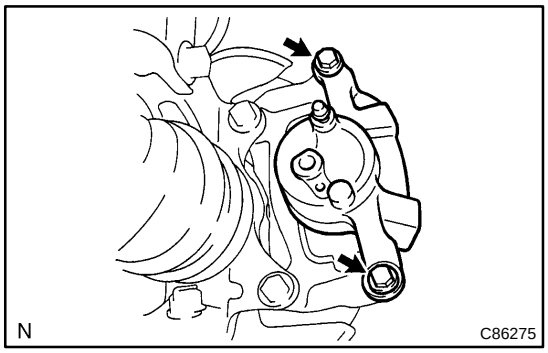

(b) Hold the cylinder slide pin and remove the 2 bolts.

4. REMOVE DISC BRAKE PAD KIT FRONT (PAD ONLY)

(a) Remove the 2 brake pads with anti–squeal shims.

(b) Remove the anti–squeal shim No.1 and anti–squeal shim No.2 from each pad.

(c) Remove the pad wear indicator plates from each pad.

5. REMOVE FRONT DISC BRAKE PAD SUPPORT PLATE

(a) Remove the 2 front disc brake pad support plates from the cylinder mounting.

6. REMOVE FRONT DISC BRAKE CYLINDER SLIDE PIN

(a) Remove the 2 cylinder slide pins from the disc brake cylinder mounting.

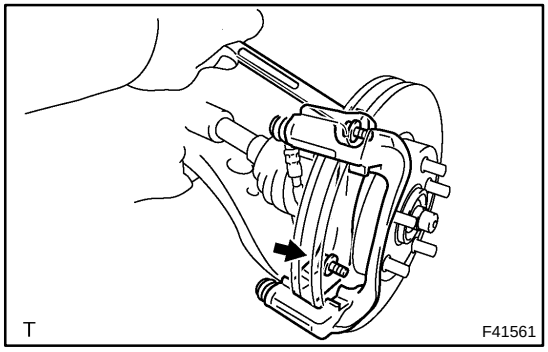

7. REMOVE FRONT DISC BRAKE CYLINDER MOUNTING LH

(a) Remove the 2 bolts and disc brake cylinder mounting.

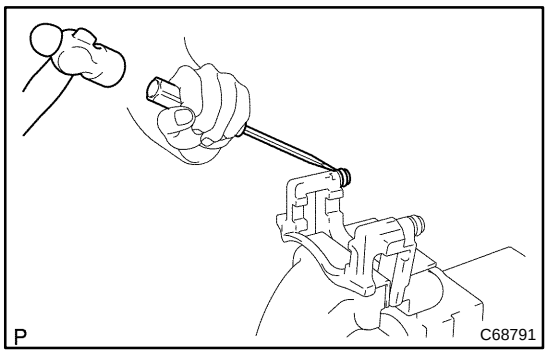

8. REMOVE FRONT DISC BRAKE BUSH DUST BOOT

(a) Place front disc brake cylinder mounting in vise.

(b) Using a screwdriver and hammer, remove the 2 bush dust boots from the disc brake cylinder mounting.

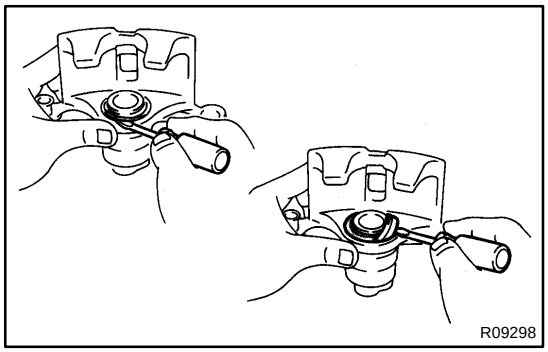

9. REMOVE CYLINDER BOOT

(a) Using a screwdriver, remove the set ring and cylinder boot.

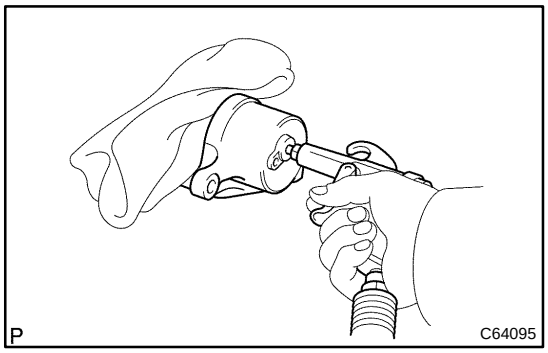

10. REMOVE FRONT DISC BRAKE PISTON

(a) Place a piece of cloth or similar, between the piston and the disc brake cylinder.

(b) Use compressed air to remove the piston from the disc brake cylinder.

CAUTION:

Do not place your fingers in front of the piston when using compressed air.

NOTICE:

Do not spatter the brake fluid.

11. REMOVE PISTON SEAL

(a) Using a screwdriver, remove the piston seal from the disc brake cylinder.

12. REMOVE FRONT DISC BRAKE BLEEDER PLUG

(a) Remove the bleeder plug cap and bleeder plug from the disc brake cylinder.

13. INSPECT BRAKE CYLINDER AND PISTON

(a) Check the cylinder bore and piston for rust or scoring.

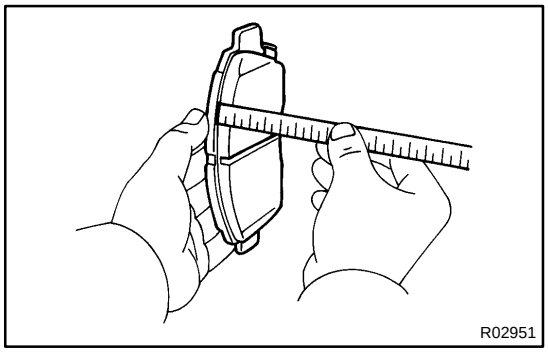

14. INSPECT PAD LINING THICKNESS

(a) Using a ruler, measure the pad lining thickness.

Standard thickness: 11.0 mm (0.433 in.)

Minimum thickness: 1.0 mm (0.039 in.)

15. INSPECT FRONT DISC BRAKE PAD SUPPORT PLATE

(a) Make sure that they have sufficient rebound, no deformation, cracks or wear, and have had all rust and dirt cleaned off.

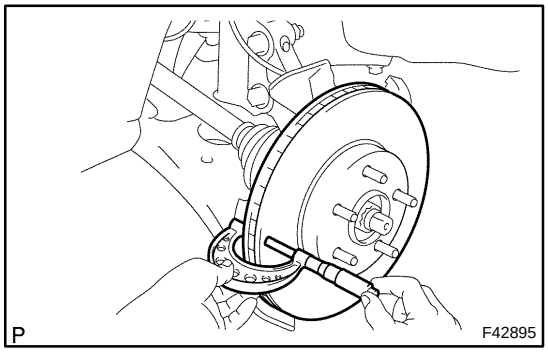

16. INSPECT DISC THICKNESS

(a) Using a micrometer, measure the disc thickness.
Standard thickness: 25.0 mm (0.984 in.)
Minimum thickness: 23.0 mm (0.906 in.)

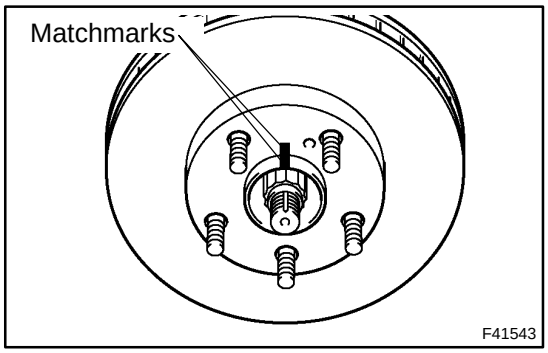

17. REMOVE FRONT DISC

(a) Make matchmarks on the front disc and the axle hub.
(b) Remove the front disc.

18. INSTALL FRONT DISC

(a) Aligning the matchmarks, install the front disc.

HINT:
Select the installation position where the disc has the minimum runout.

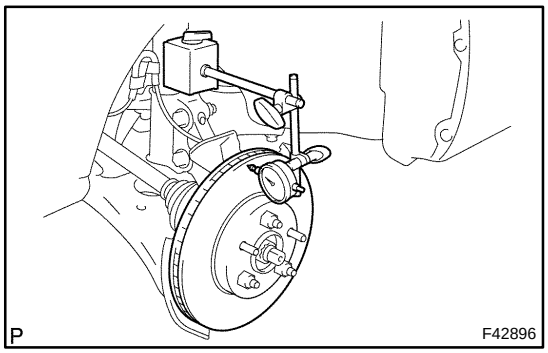

19. INSPECT DISC RUNOUT

(a) Temporarily fasten the disc with hub nuts.
Torque: 103 N·m (1,050 kgf·cm, 76 ft·lbf)
(b) Using a dial indicator, measure the disc runout 10 mm (0.39 in.) away from the outer edge of the disc.
Maximum disc runout: 0.05 mm (0.0020 in.)
(c) If the disc runout is the maximum value or greater, check the bearing play in the axial direction and check the axle hub runout (See page 30–3). If the bearing play and axle hub runout are normal, adjust the disc runout or grind it on a ”On–car” brake lathe.

20. TEMPORARY TIGHTEN FRONT DISC BRAKE BLEEDER PLUG

(a) Temporarily tighten the bleeder plug, and install bleeder plug cap to the disc brake cylinder.

21. INSTALL PISTON SEAL

(a) Apply the lithium soap base glycol grease on a new piston seal.
(b) Install the piston seal to the disc brake cylinder.

22. INSTALL FRONT DISC BRAKE PISTON

(a) Apply the lithium soap base glycol grease on the piston.
(b) Install the piston to the disc brake cylinder.

NOTICE:
Do not screw the piston forcedly in the disc brake cylinder.

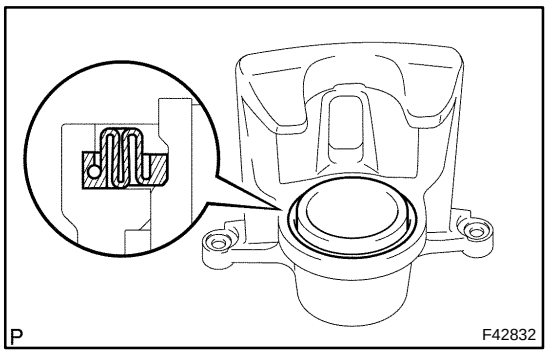

23. INSTALL CYLINDER BOOT

(a) Apply the lithium soap base glycol grease to a new cylinder boot. Install the cylinder boot to the disc brake cylinder.

HINT:

Install the boot securely to the grooves of the cylinder and piston.

(b) Using a screwdriver, install the set ring.

NOTICE:

Do not damage the cylinder boot.

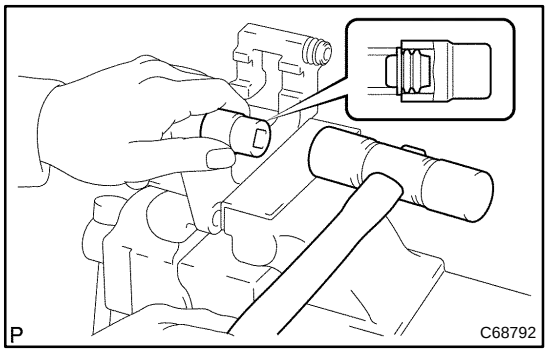

24. INSTALL FRONT DISC BRAKE BUSH DUST BOOT

(a) Place front disc brake cylinder mounting in vise.

(b) Apply the lithium soap base glycol grease to seal surface of 2 new bush dust boots.

(c) Using a socket wrench (19 mm) and hammer, drive the 2 bush dust boots to the disc brake cylinder mounting.

25. INSTALL FRONT DISC BRAKE CYLINDER MOUNTING LH

(a) Install the disc brake cylinder mounting LH with the 2 bolts.

Torque: 106.8 N·m (1,089 kgf·cm, 79 ft·lbf)

26. INSTALL FRONT DISC BRAKE CYLINDER SLIDE PIN

(a) Apply the lithium soap base glycol grease to the sliding part and the seal surface of the 2 cylinder slide pins.

(b) Install the 2 cylinder slide pins to the disc brake cylinder mounting.

27. INSTALL FRONT DISC BRAKE PAD SUPPORT PLATE

(a) Install the 2 front disc brake pad support plates to the cylinder mounting.

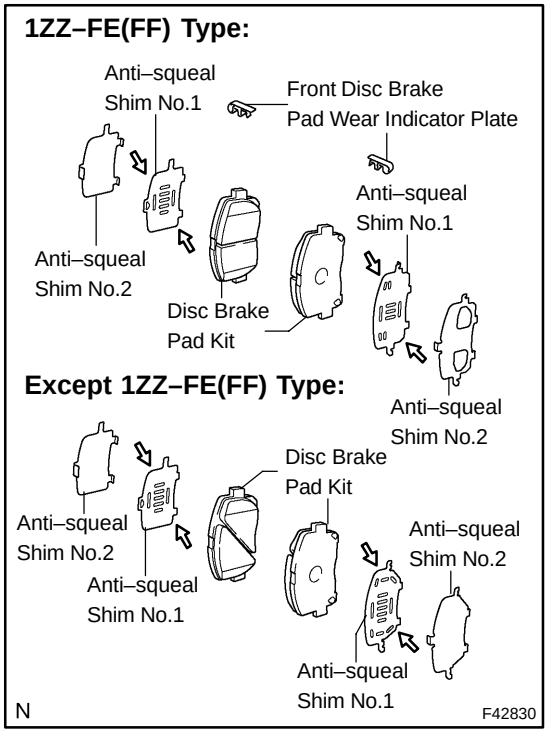

28. INSTALL DISC BRAKE PAD KIT FRONT (PAD ONLY)

NOTICE:

If necessary, replace the anti–squeal shim kit when replacing the brake pad.

(a) Apply disc brake grease to each anti–squeal shim No.1.

(b) Install anti–squeal shims on each pad.

(c) 1ZZ–FE(FF) type:

Install the pad wear indicator plate facing upward, and install each pad.

NOTICE:

There should be no oil or grease on the friction surfaces of the pads and the disc.

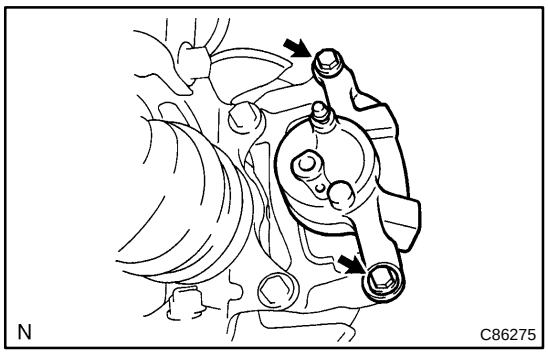

29. INSTALL FRONT DISC BRAKE CYLINDER SUB–ASSY

(a) Install the disc brake cylinder with the 2 bolts.
Torque: 34.3 N·m (350 kgf·cm, 25 ft·lbf)

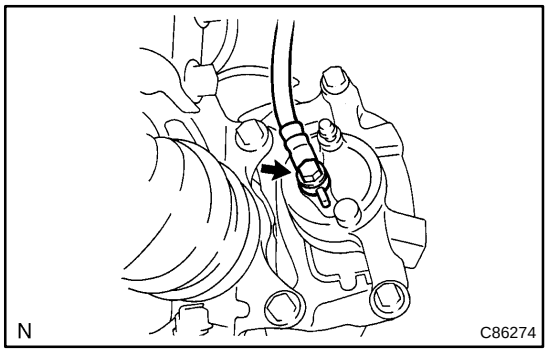

(b) Install a new gasket and flexible hose with the union bolt.
Torque: 29 N·m (296 kgf·cm, 21 ft·lbf)

HINT:

- Gasket has 2 types: 2–piece type and 1–piece type.
- Install the flexible hose lock securely in the lock hole in the disc brake cylinder.

30. FILL RESERVOIR WITH BRAKE FLUID

31. BLEED MASTER CYLINDER (See page 32–6)
SST 09023–00100

32. BLEED BRAKE LINE (See page 32–6)

33. CHECK FLUID LEVEL IN RESERVOIR

34. CHECK BRAKE FLUID LEAKAGE

35. INSTALL FRONT WHEEL
Torque: 103 N·m (1,050 kgf·cm, 76 ft·lbf)

REAR DRUM BRAKE (1ZZ–FE(FF))

COMPONENTS

320J6–01

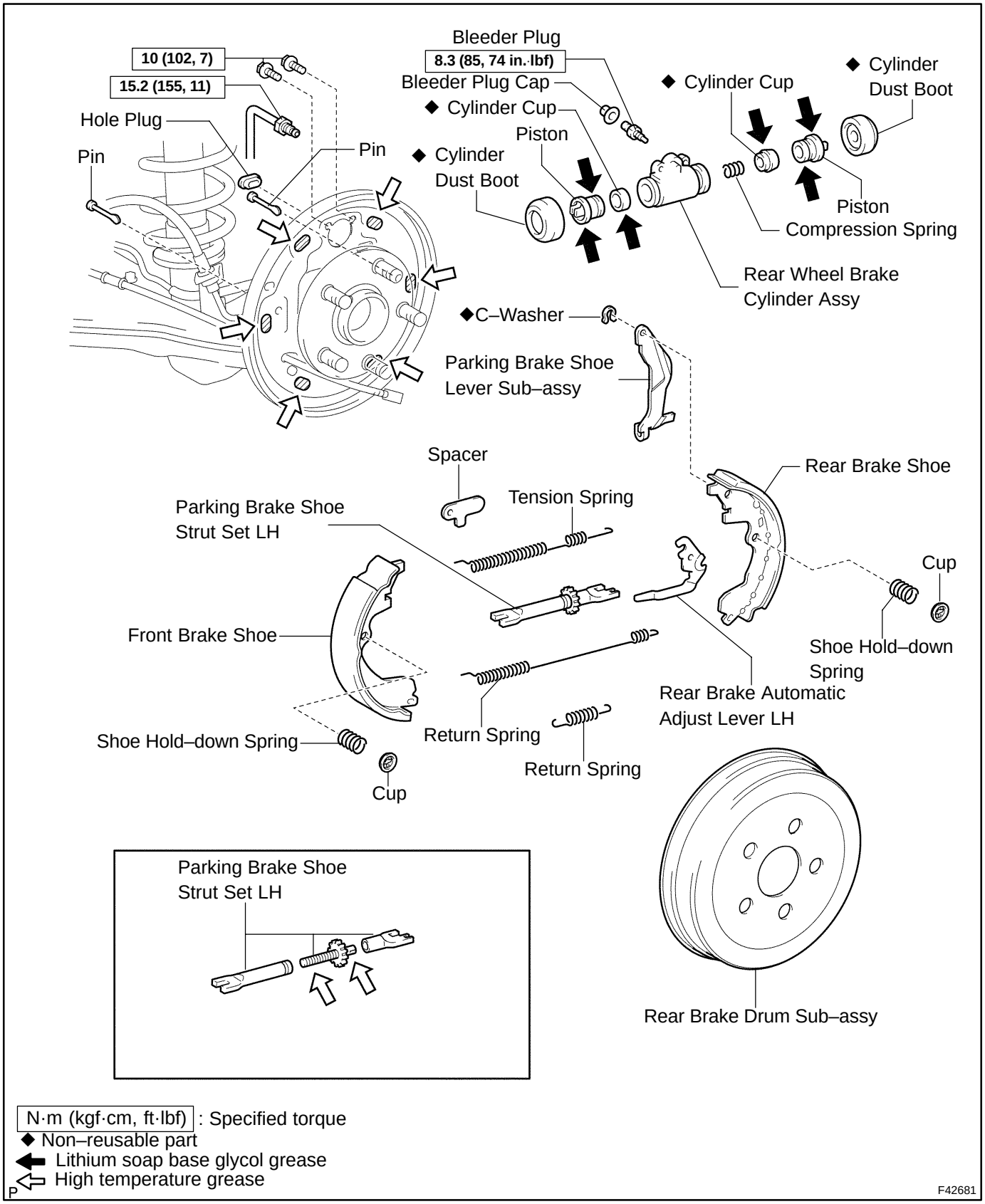

320J7–01

OVERHAUL

HINT:

Overhaul the RH side by the same procedures as LH side.

1. REMOVE REAR WHEEL

2. DRAIN BRAKE FLUID

NOTICE:

Wash the brake fluid off immediately if it comes into contact with any painted surface.

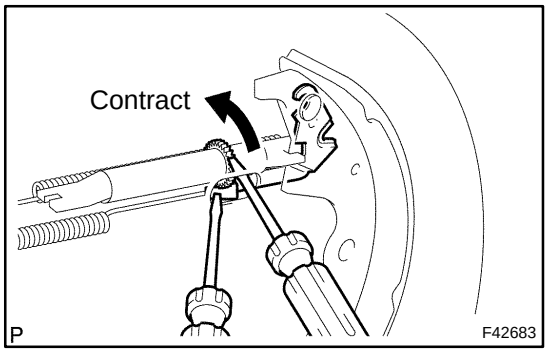

3. REMOVE REAR BRAKE DRUM SUB–ASSY

(a) Release the parking brake lever, and remove the brake drum.

HINT:

If the brake drum cannot be removed easily, do the following steps.

(b) Remove the hole plug and insert a screwdriver through the hole in the backing plate, and hold the automatic adjusting lever away from the adjuster.

(c) Using an another screwdriver, reduce the brake shoe adjuster by turning the adjusting wheel.

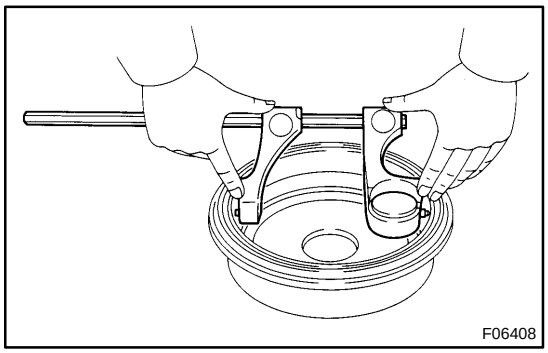

4. INSPECT BRAKE DRUM INSIDE DIAMETER

(a) Using a brake drum gauge or equivalent, measure the inside diameter of the drum.

Standard inside diameter: 228.6 mm (9.000 in.)

Maximum inside diameter: 229.6 mm (9.039 in.)

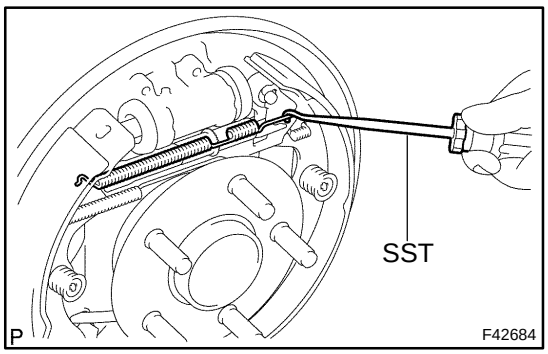

5. REMOVE FRONT BRAKE SHOE

(a) Using SST, remove the upper side tension spring with spacer.

SST 09921–00010

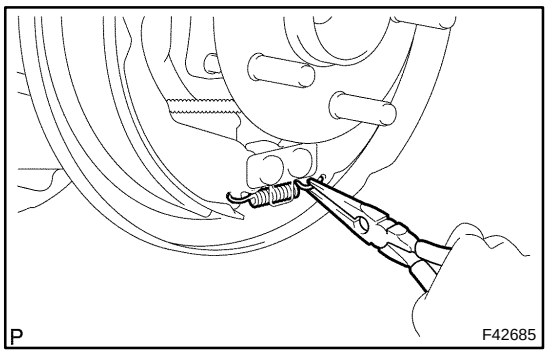

(b) Using a needle–nose pliers, remove the anchor side return spring.

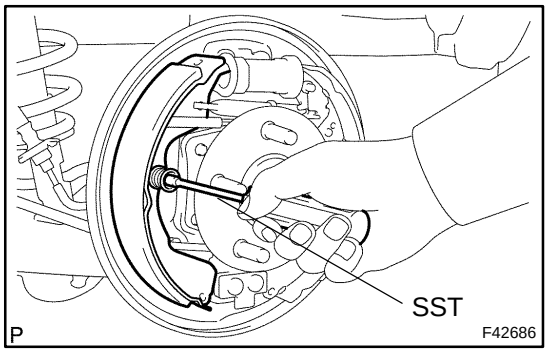

(c) Using SST, remove the cup, shoe hold–down sprig and pin.
SST 09718–00010

(d) Disconnect the upper side return spring from the front shoe, and remove the front brake shoe.

6. REMOVE PARKING BRAKE SHOE STRUT SET LH

7. REMOVE REAR BRAKE AUTOMATIC ADJUST LEVER LH

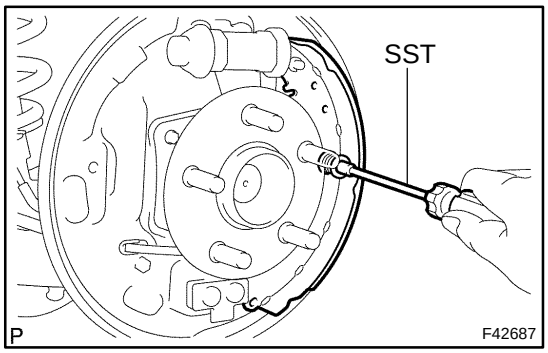

8. REMOVE REAR BRAKE SHOE

(a) Using SST, remove the cup, shoe hold–down spring and pin.
SST 09718–00010

(b) Remove the upper side return spring from the rear brake shoe.

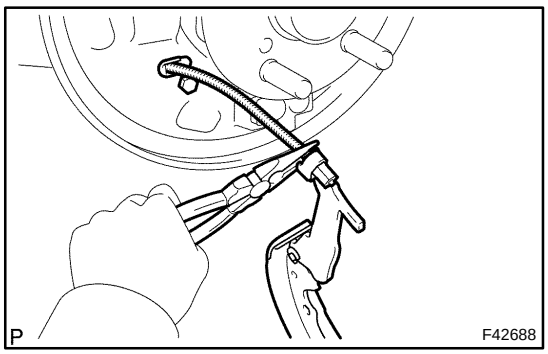

(c) Using a needle–nose pliers, disconnect the parking brake cable No.3 and remove the rear brake shoe.

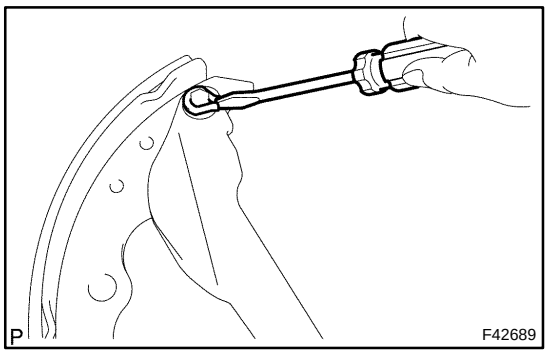

9. REMOVE REAR BRAKE PARKING BRAKE SHOE LEVER SUB–ASSY

(a) Using a screwdriver, remove the C–washer and parking brake shoe lever.

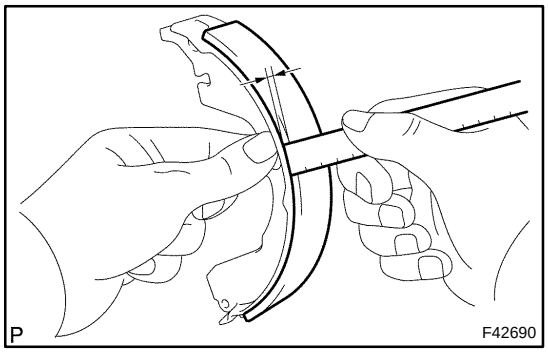

10. INSPECT REAR DRUM BRAKE SHOE LINING THICKNESS

(a) Using a ruler, measure the thickness of the shoe lining.
Standard thickness: 5.5 mm (0.217 in.)
Minimum thickness: 1.0 mm (0.039 in.)

If the lining thickness is at the minimum thickness or less, or if there is severe, uneven wear, replace the brake shoe.

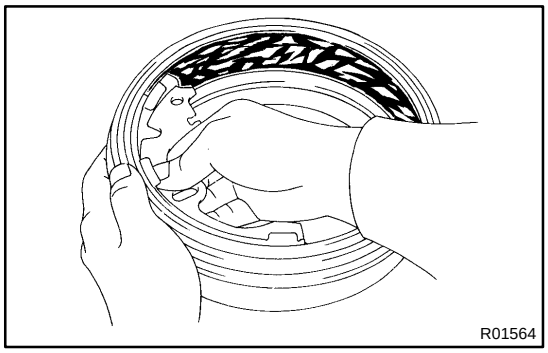

11. INSPECT BRAKE DRUM AND REAR DRUM BRAKE SHOE LINING FOR PROPER CONTACT

(a) Apply chalk to the inside surface of the drum, then grind drum on the brake shoe lining to fit.

If the contact between the drum and the shoe lining is improper, repair it using a brake shoe grinder or replace the brake shoe assembly.

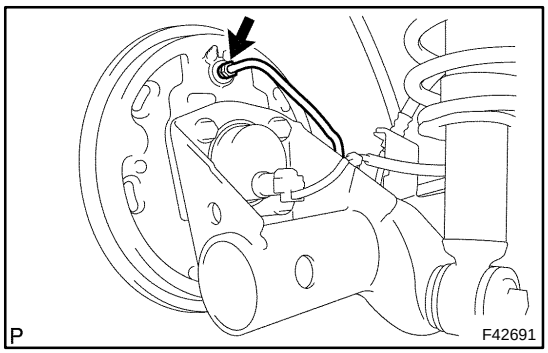

12. REMOVE LH, FRONT OR UPPER REAR WHEEL BRAKE CYLINDER ASSY

(a) Using SST, disconnect the brake tube, use a container to catch brake fluid.
SST 09023–00100

(b) Remove the 2 bolts and wheel cylinder.

13. REMOVE REAR WHEEL CYLINDER CUP KIT

(a) Remove the 2 cylinder dust boots from the wheel cylinder.
(b) Remove the 2 pistons and compression spring.
(c) Remove the 2 wheel cylinder cups from each piston.
(d) Remove the bleeder plug cap and bleeder plug from the wheel cylinder.

14. INSPECT BRAKE WHEEL CYLINDER

(a) Check the cylinder bore and piston for rust or scoring.

15. INSTALL REAR WHEEL CYLINDER CUP KIT

(a) Temporarily tighten the bleeder plug to the wheel cylinder, and install the bleeder plug cap.

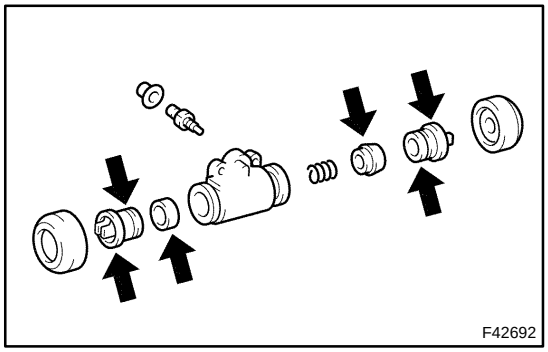

(b) Apply the lithium soap base glycol grease to the 2 new wheel cylinder cups and the 2 pistons.
(c) Install the 2 wheel cylinder cups to each piston.
(d) Install the compression spring and 2 pistons to the wheel cylinder.
(e) Install the 2 new cylinder dust boots to the wheel cylinder.

16. INSTALL LH, FRONT OR UPPER REAR WHEEL BRAKE CYLINDER ASSY

(a) Install the wheel cylinder with the 2 bolts.
Torque: 10 N·m (102 kgf·cm, 7 ft·lbf)
(b) Using SST, connect the brake tube.
SST 09023–00100
Torque: 15.2 N·m (155 kgf·cm, 11 ft·lbf)

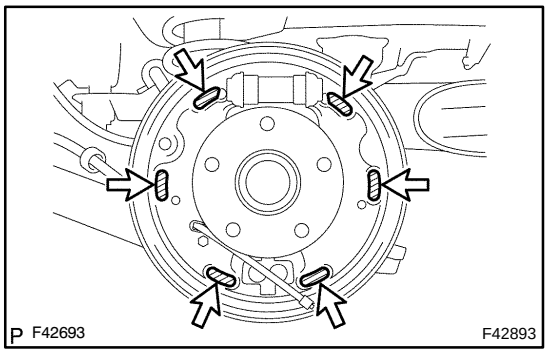

17. APPLICATION HIGH TEMPERATURE GREASE

(a) Apply the high temperature grease to the shoe attached surface of backing plate.

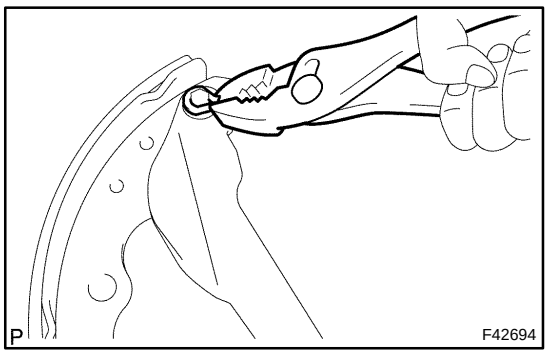

18. INSTALL REAR BRAKE PARKING BRAKE SHOE LEVER SUB–ASSY

(a) Using a pliers, install the parking brake shoe lever with a new C–washer.

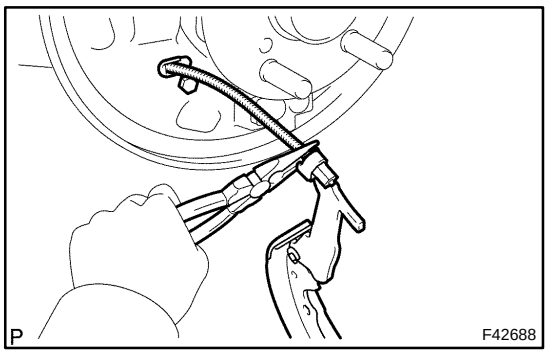

19. INSTALL REAR BRAKE SHOE

(a) Using a needle–nose pliers, connect the parking brake cable No.3 to the parking brake shoe lever.

(b) Connect the upper side return spring to the rear brake shoe.

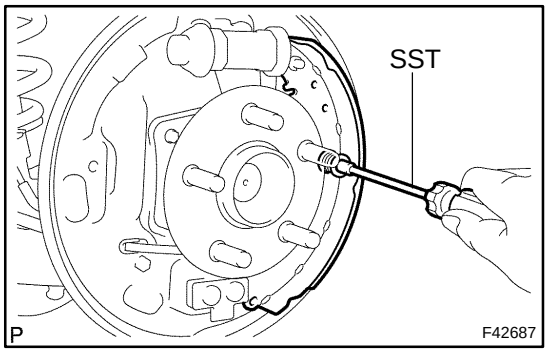

(c) Using SST, install the rear brake shoe, pin, shoe hold–down spring and cup.
SST 09718–00010

20. INSTALL REAR BRAKE AUTOMATIC ADJUST LEVER LH

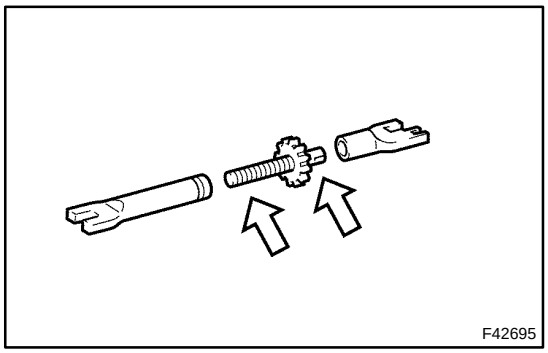

21. INSTALL PARKING BRAKE SHOE STRUT SET LH

(a) Apply the high temperature grease to the adjusting bolt.

(b) Install the parking brake shoe strut set LH.

22. INSTALL FRONT BRAKE SHOE

(a) Install the upper side return spring to the front brake shoe.

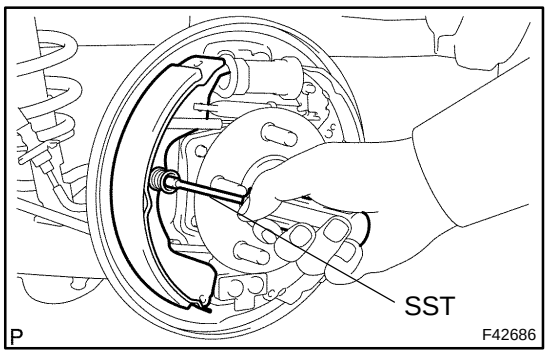

(b) Using SST, install the front brake shoe, pin, shoe hold–down spring and cup.
SST 09718–00010

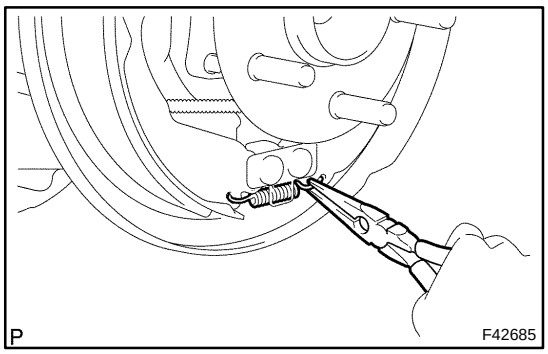

(c) Using a needle–nose pliers, install the anchor side return spring.

(d) Install the spacer to the upper side tension spring.

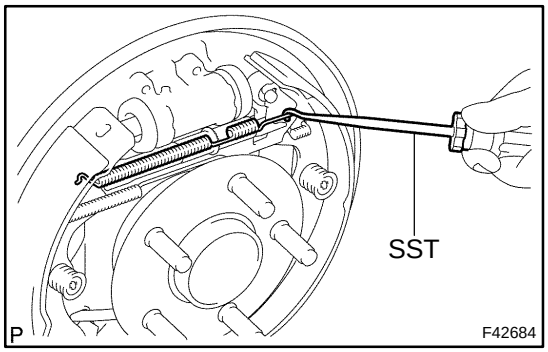

(e) Using SST, install the upper side tension spring with spacer.
SST 09921–00010

23. CHECK REAR DRUM BRAKE INSTALLATION

(a) Check that each part is installed properly.

NOTICE:

There should be no oil or grease adhering to the friction surfaces of the shoe lining and drum.

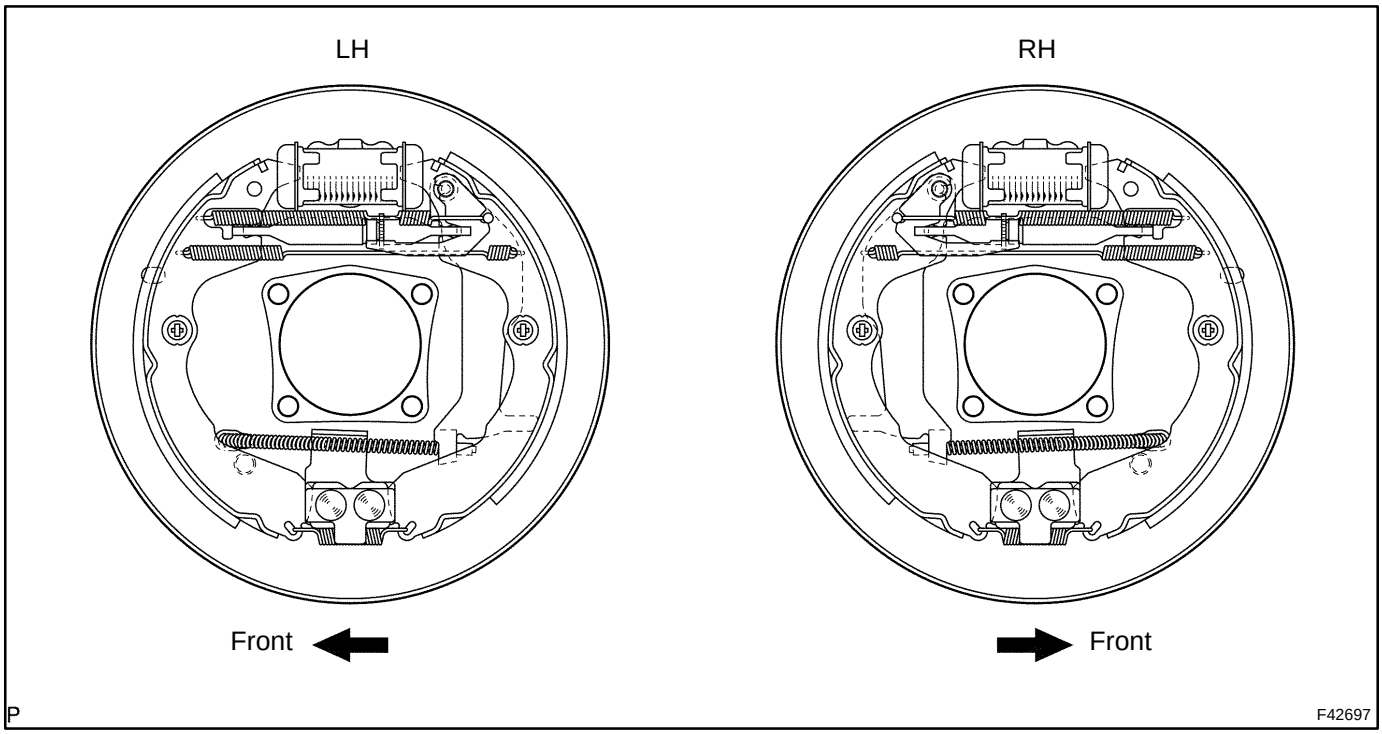

24. INSTALL REAR BRAKE DRUM SUB–ASSY

25. ADJUST REAR DRUM BRAKE SHOE CLEARANCE

(a) Temporarily install the hub nuts.

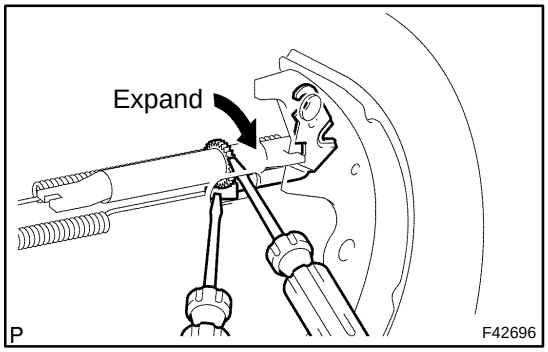

(b) Remove the hole plug, and turn the adjuster and expand the shoe until the drum locks.

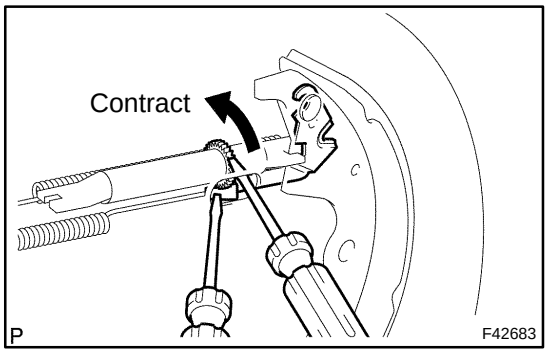

(c) Using a screwdriver, back off the adjuster 8 notches.

(d) Install the hole plug.

26. FILL RESERVOIR WITH BRAKE FLUID

27. BLEED MASTER CYLINDER (See page 32–6)

SST 09023–00100

28. BLEED BRAKE LINE (See page 32–6)

29. CHECK FLUID LEVEL IN RESERVOIR

30. CHECK BRAKE FLUID LEAKAGE

31. INSTALL REAR WHEEL

Torque: 103 N·m (1,050 kgf·cm, 76 ft·lbf)

32. INSPECT PARKING BRAKE LEVER TRAVEL (See page 33–2)

33. ADJUST PARKING BRAKE LEVER TRAVEL (See page 33–2)

BRAKE PEDAL SUB–ASSY

320IW–01

ADJUSTMENT

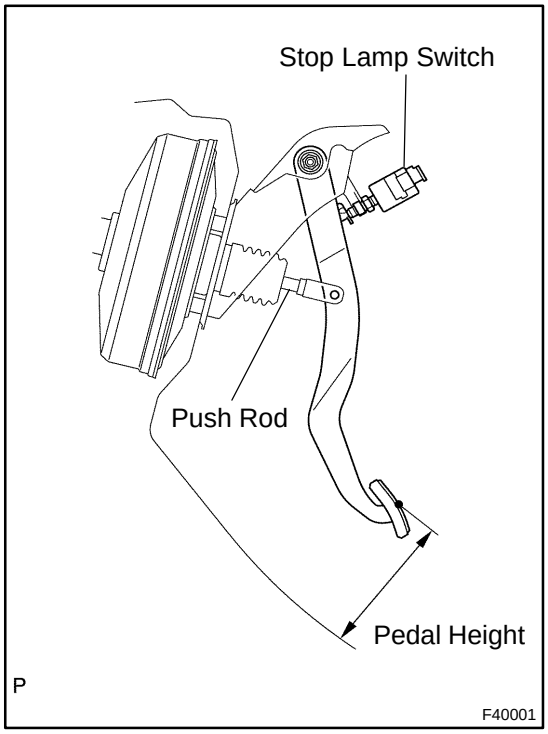

1. CHECK AND ADJUST BRAKE PEDAL HEIGHT

(a) Inspect brake pedal height.

Pedal height from asphalt sheet:

M/T: 134.9 – 144.9 mm (5.311 – 5.703 in.)

A/T: 136.0 – 146.0 mm (5.353 – 5.747 in.)

(1) Disconnect the connector from the stop lamp switch.

(2) Remove the stop lamp switch.

(3) Loosen the clevis lock nut.

(4) Adjust the pedal height by turning the pedal push rod.

(5) Tighten the push rod lock nut.

Torque: 26 N·m (265 kgf·cm, 19 ft·lbf)

(6) Install the stop lamp switch.

(7) Connect the connector to the stop lamp switch.

(8) Push the brake pedal in 5 – 15 mm (0.20 – 0.59 in.), and turn the stop lamp switch to lock the nut in the position where the stop lamp goes off.

(9) After installation, push the brake pedal in 5 – 15 mm (0.20 – 0.59 in.), check that stop lamp comes on.

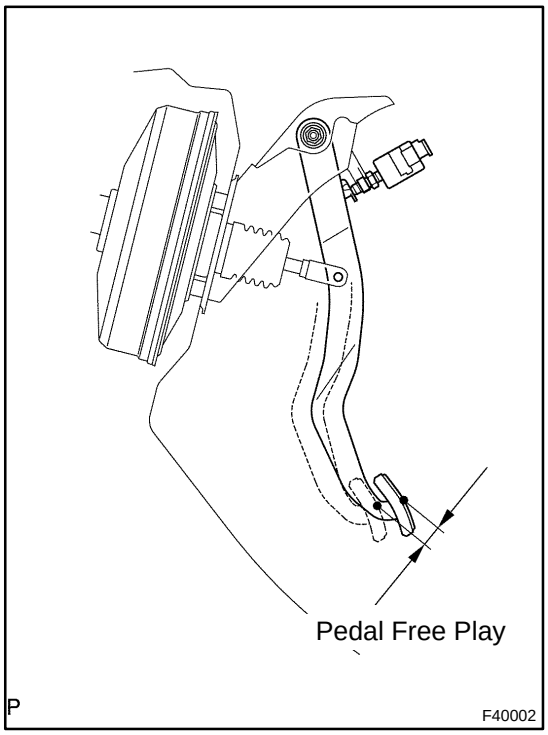

2. CHECK PEDAL FREE PLAY

(a) Stop the engine and depress the brake pedal several times until there is no more vacuum left in the booster.

(b) Push in the pedal until the beginning of the resistance is felt. Measure the distance, as shown in the illustration.

Pedal free play: 1 – 6 mm (0.04 – 0.24 in.)

If incorrect, check the stop lamp switch clearance.

If the clearance is OK, then troubleshoot the brake system.

Stop lamp switch clearance:

0.5 – 2.4 mm (0.020 – 0.094 in.)

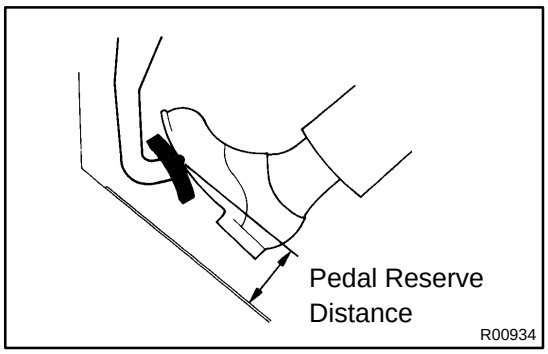

3. CHECK PEDAL RESERVE DISTANCE

(a) Release the parking brake lever.
With engine running, depress the pedal and measure the pedal reserve distance, as shown in the illustration.
Pedal reserve distance from asphalt sheet at 490 N (50 kgf, 110.2 lbf): More than 70 mm (2.76 in.)

If incorrect, troubleshoot the brake system.

320IX–01

COMPONENTS

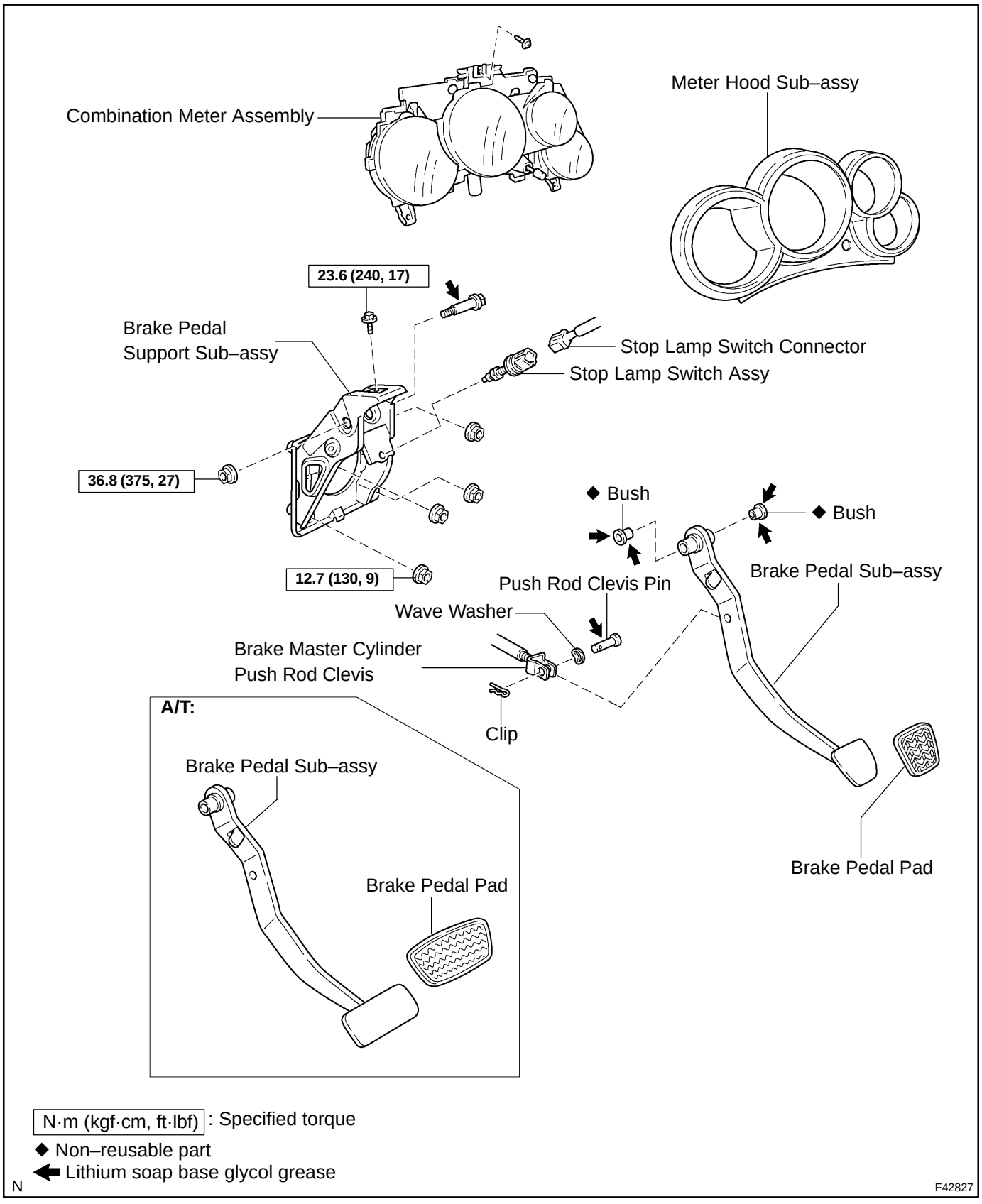

N·m (kgf·cm, ft·lbf) : Specified torque

◆ Non–reusable part

Lithium soap base glycol grease

N

F42827

320IY–01

REPLACEMENT

1. REMOVE COMBINATION METER ASSEMBLY (See page 71–18)

2. DISCONNECT BRAKE MASTER CYLINDER PUSH ROD CLEVIS

(a) Remove the clip, push rod clevis pin and wave washer, and disconnect the push rod clevis from the brake pedal.

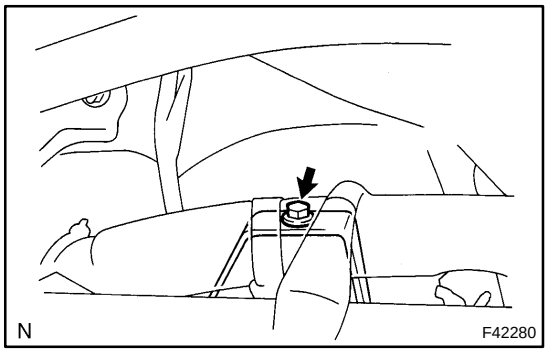

3. REMOVE BRAKE PEDAL SUPPORT SUB–ASSY

(a) Remove the bolt from the brake pedal support.

(b) Disconnect the stop lamp switch connector.

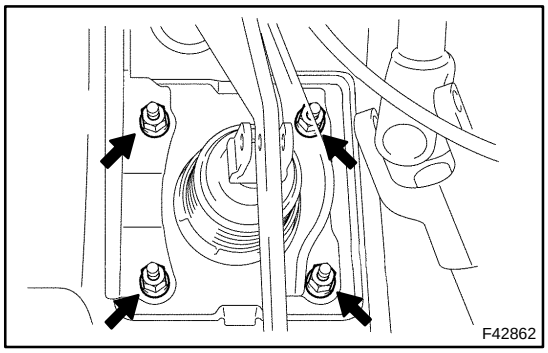

(c) Remove the 4 nuts and brake pedal support assy.

4. REMOVE BRAKE PEDAL SUB–ASSY

(a) Remove the bolt and nut from the brake pedal support sub–assy.

(b) Remove the brake pedal sub–assy and 2 bushes.

5. REMOVE STOP LAMP SWITCH ASSY

(a) Loosen the stop lamp switch lock nut.

(b) Remove the stop lamp switch assy from the brake pedal support sub–assy.

6. REMOVE BRAKE PEDAL PAD

(a) Remove the brake pedal pad from the brake pedal sub–assy.

7. INSTALL BRAKE PEDAL PAD

(a) Install the brake pedal pad to the brake pedal sub–assy.

8. INSTALL STOP LAMP SWITCH ASSY

(a) Install the stop lamp switch assy to the brake pedal sub–assy.

9. INSTALL BRAKE PEDAL SUB–ASSY

(a) Apply the lithium soap base glycol grease to the 2 new bushes on the ends and sides.

(b) Install the brake pedal sub–assy and 2 bushes to the brake pedal support with the bolt and nut.
Torque: 36.8 N·m (375 kgf·cm, 27 ft·lbf)

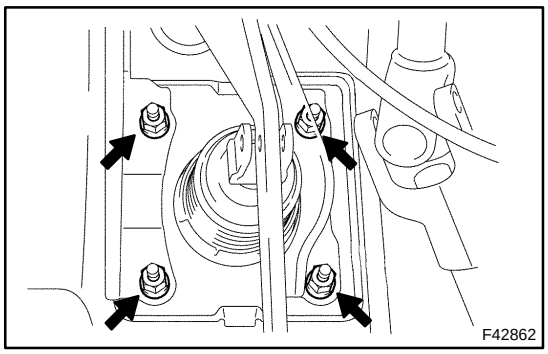

10. INSTALL BRAKE PEDAL SUPPORT SUB–ASSY

(a) Install the brake pedal support assy with the 4 nuts.
Torque: 12.7 N·m (130 kgf·cm, 9 ft·lbf)

(b) Connect the stop lamp switch connector to the stop lamp switch assy.

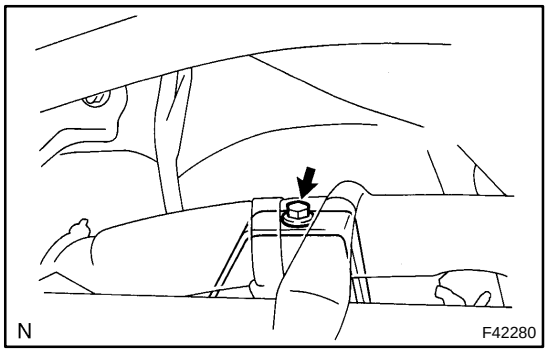

(c) Install the bolt to the brake pedal support.
Torque: 23.6 N·m (240 kgf·cm, 17 ft·lbf)

11. CONNECT BRAKE MASTER CYLINDER PUSH ROD CLEVIS

(a) Apply the lithium soap base glycol grease to the push rod clevis pin.

(b) Connect the brake master cylinder push rod clevis with the push rod clevis pin, wave washer and clip.

12. INSTALL COMBINATION METER ASSEMBLY

13. CHECK AND ADJUST BRAKE PEDAL HEIGHT (See page 32–8)

14. CHECK PEDAL FREE PLAY (See page 32–8)

15. CHECK PEDAL RESERVE DISTANCE (See page 32–8)

BRAKE ACTUATOR ASSY

320JE–01

ON–VEHICLE INSPECTION

1. CONNECT HAND–HELD TESTER:

(a) Connect the hand–held tester to the DLC3.

(b) Start the engine and run it at idle.

(c) Select the ACTIVE TEST mode on the hand–held tester.

HINT:

Please refer to the hand–held tester operator's manual for further details.

2. INSPECT ACTUATOR MOTOR OPERATION

(a) With the motor relay ON, check the actuator motor operation noise.

(b) Turn the motor relay OFF.

(c) Depress the brake pedal and hold it for about 15 seconds. Check that the brake pedal cannot be depressed.

(d) With the motor relay ON, check that the pedal does not pulsate.

NOTICE:

Do not keep motor relay ON for more than 5 seconds continuously. When operating it continuously, set the interval of more than 20 seconds.

(e) Turn the motor relay OFF and release the brake pedal.

3. INSPECT RIGHT FRONT WHEEL OPERATION

NOTICE:

Never turn ON the solenoid which is not described below.

(a) With the brake pedal depressed, perform the following operations.

(b) Turn the SFRH and SFRR solenoid ON simultaneously, and check that the pedal cannot be depressed.

NOTICE:

Do not keep solenoid ON for more than 10 seconds continuously. When operating it continuously, set the interval of more than 20 seconds.

(c) Turn the SFRH and SFRR solenoid OFF simultaneously, and check that the pedal can be depressed.

(d) Turn the motor relay ON, and check that the pedal returns.

NOTICE:

Do not keep motor relay ON for more than 5 seconds continuously. When operating it continuously, set the interval of more than 20 seconds.

(e) Turn the motor relay OFF and release the brake pedal.

4. INSPECT OTHER WHEEL OPERATION

(a) As in the same procedure, check the solenoids of other wheels.

HINT:

Left front wheel: SFLH, SFLR

Right rear wheel: SRRH, SRRR

Left rear wheel: SRLH, SRLR

320JF–01

REPLACEMENT

1. DRAIN BRAKE FLUID

NOTICE:

Wash the brake fluid off immediately if it comes into contact with any painted surface.

2. REMOVE FRONT WHEEL RH

3. REMOVE FRONT FENDER LINER RH

4. REMOVE BRAKE ACTUATOR WITH BRACKET

(a) Turn the latch of the actuator connector to disconnect the connector.

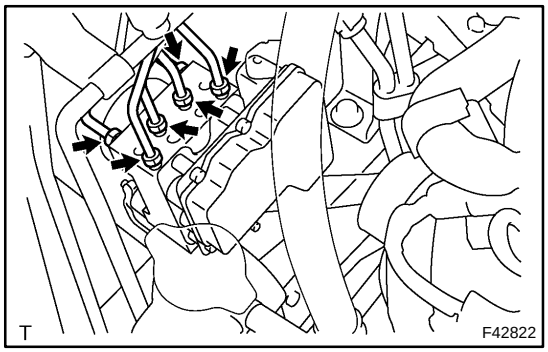

(b) Using SST, disconnect the 6 brake tubes from the brake actuator.
SST 09023–00100

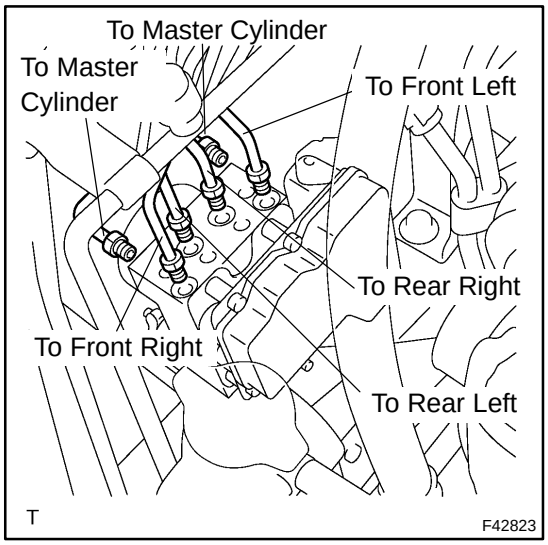

(c) Attach tags or make a memo to identify the place to reconnect.

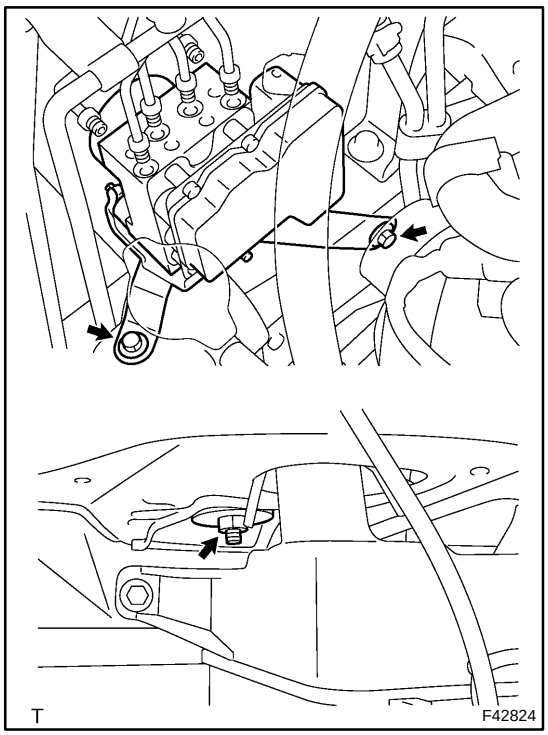

(d) Remove the nut, 2 bolts and brake actuator with bracket.

5. REMOVE BRAKE ACTUATOR ASSY

(a) Remove the 3 nuts and brake actuator from bracket.

6. INSTALL BRAKE ACTUATOR ASSY

(a) Install the brake actuator with the 3 nuts to the bracket.

Torque: 4.7 N·m (48 kgf·cm, 42 in.·lbf)

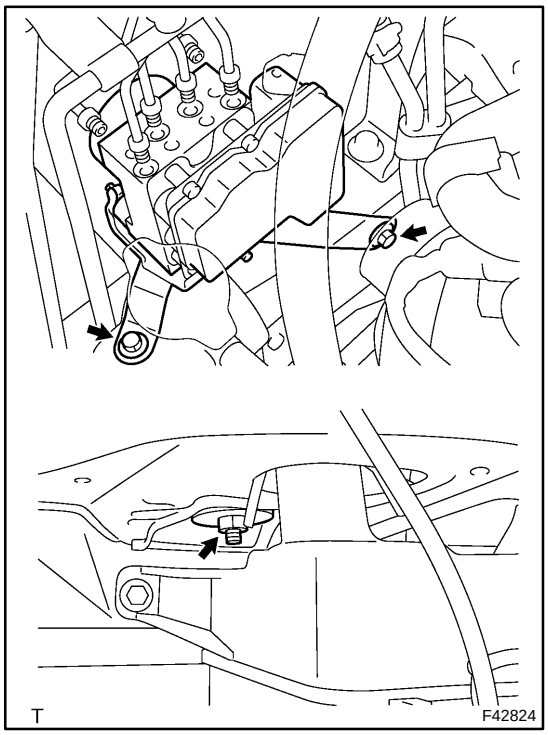

7. INSTALL BRAKE ACTUATOR WITH BRACKET

(a) Install the brake actuator with bracket with the nut and 2 bolts.

Torque: 19 N·m (194 kgf·cm, 14 ft·lbf)

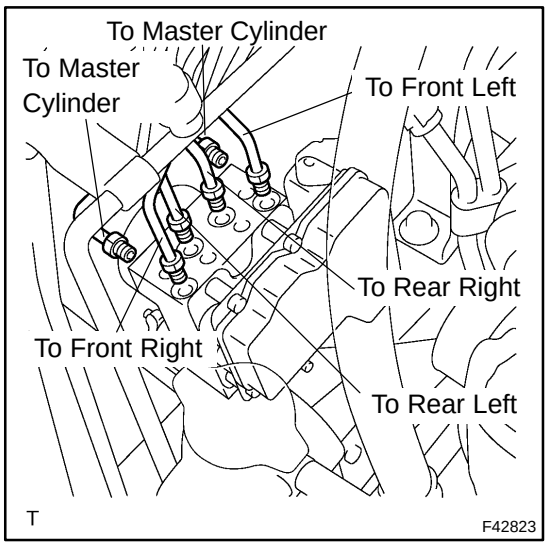

(b) Using SST, connect the 6 brake tubes to the correct position of brake actuator, as shown in the illustration.
SST 09023–00100
Torque: 15.2 N·m (155 kgf·cm, 11 ft·lbf)

(c) Connect the brake actuator connector.

8. INSTALL FRONT FENDER LINER RH
9. INSTALL FRONT WHEEL RH
Torque: 103 N·m (1,050 kgf·cm, 76 ft·lbf)
10. FILL RESERVOIR WITH BRAKE FLUID
11. BLEED MASTER CYLINDER (See page 32–6)
SST 09023–00100
12. BLEED BRAKE LINE (See page 32–6)
13. CHECK FLUID LEVEL IN RESERVOIR
14. CHECK BRAKE FLUID LEAKAGE
15. CHECK BRAKE ACTUATOR WITH HAND–HELD TESTER (See page 05–316)

SPEED SENSOR FRONT LH

320JG–01

REPLACEMENT

HINT:

Replace the RH side by the same procedure as the LH side.

1. REMOVE FRONT WHEEL

2. REMOVE FRONT FENDER LINER LH

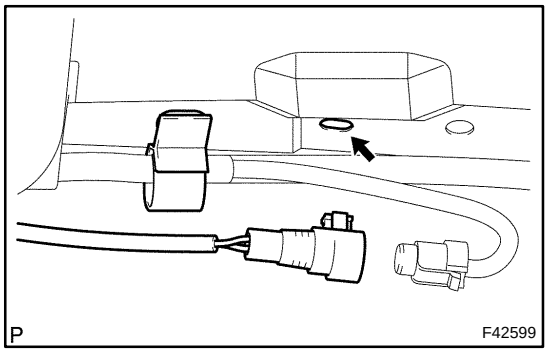

3. REMOVE SPEED SENSOR FRONT LH

(a) Disconnect the speed sensor wire harness clamp from the body.

(b) Disconnect the speed sensor connector.

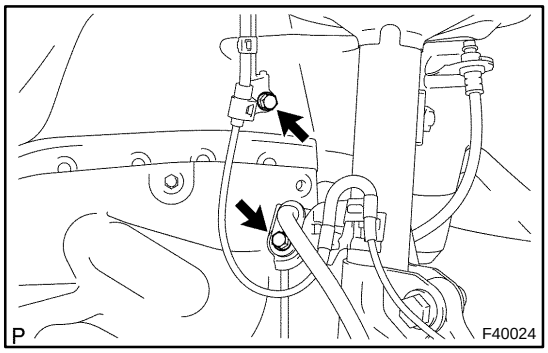

(c) Remove the 2 clamp bolts holding the sensor harness from the body and shock absorber.

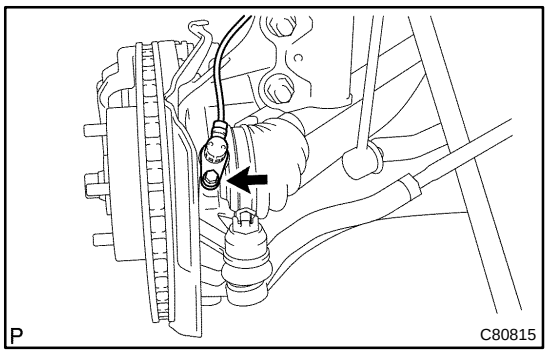

(d) Remove the bolt and speed sensor front LH.

NOTICE:

Keep on the sensor tip clean.

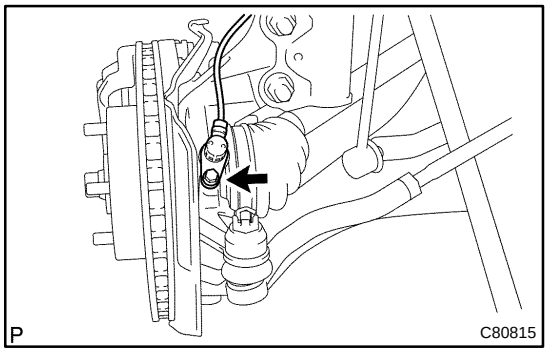

4. INSTALL SPEED SENSOR FRONT LH

(a) Install the speed sensor front LH with the bolt.

Torque: 8.0 N·m (82 kgf·cm, 71 in.·lbf)

NOTICE:

Make sure the sensor tip is clean.

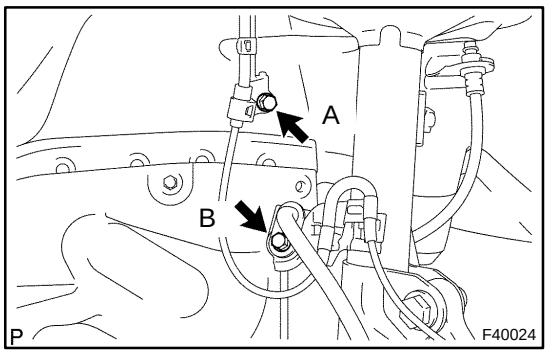

(b) Install the sensor harness clamp with the 2 bolts ”A” and ”B” to the body and shock absorber.
Torque:
Bolt A: 8.0 N·m (82 kgf·cm, 71 in.·lbf)
Bolt B: 29 N·m (296 kgf·cm, 21 ft·lbf)

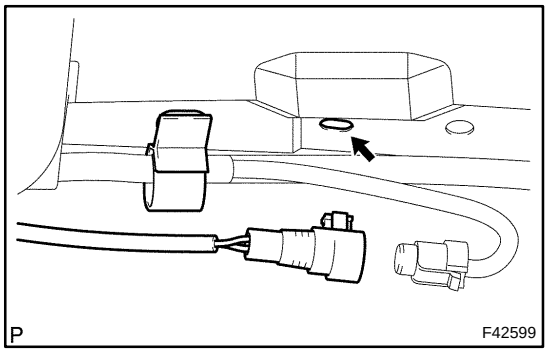

(c) Connect the speed sensor connector.
(d) Connect the speed sensor wire harness clamp to the body.

5. INSTALL FRONT FENDER LINER LH
6. INSTALL FRONT WHEEL
Torque: 103 N·m (1,050 kgf·cm, 76 ft·lbf)
7. CHECK ABS SPEED SENSOR SIGNAL (See page 05–316)

SKID CONTROL SENSOR (FF)

320JH–01

REPLACEMENT

HINT:

Replace the RH side by the same procedure as the LH side.

1. **REMOVE REAR WHEEL**
2. **REMOVE REAR BRAKE DRUM SUB–ASSY (DRUM REAR BRAKE TYPE) (See page 32–33)**
3. **REMOVE REAR DISC BRAKE CALIPER ASSY LH (DISC REAR BRAKE TYPE) (See page 32–49)**
4. **REMOVE REAR DISC (DISC REAR BRAKE TYPE) (See page 32–49)**

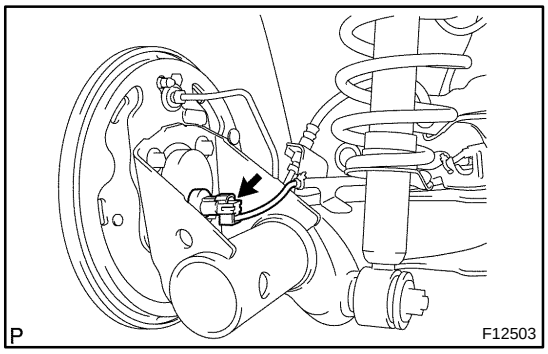

5. **DISCONNECT SKID CONTROL SENSOR WIRE**

(a) Disconnect the skid control sensor wire connector from the skid control sensor.

6. **REMOVE REAR AXLE HUB & BEARING ASSY LH (See page 30–63)**

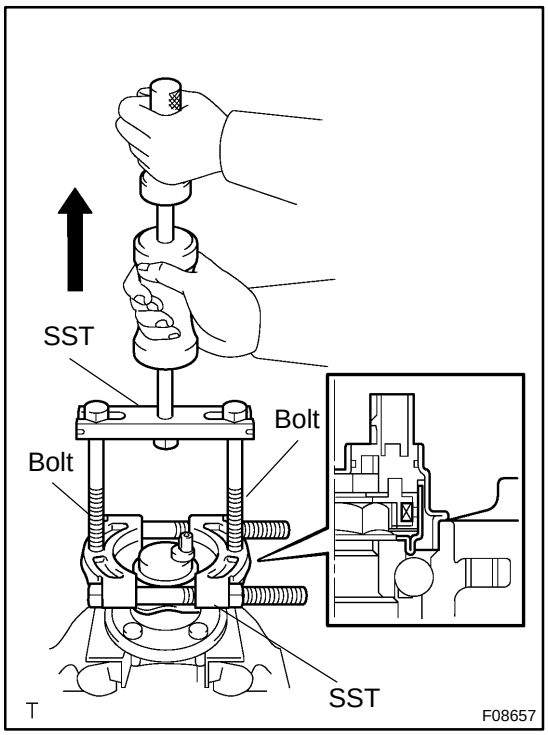

7. **REMOVE SKID CONTROL SENSOR**

(a) Mount the rear axle hub in a soft jaw vise.

NOTICE:

Replace the axle hub assembly if it is dropped or a strong shock is given to it.

(b) Using a pin punch and hammer, drive out the 2 pins and remove the 2 attachments from SST.

(c) Using SST and 2 bolts (Diameter: 12 mm, pitch: 1.5 mm), remove the skid control sensor from the rear axle hub.

SST 09520–00031 (09520–00040), 09521–00020, 09950–00020

NOTICE:

- **If a damage is inflicted to the sensor rotor, replace the axle hub assembly.**
- **Do not scratch the contacting surface of axle hub and speed sensor.**

8. INSTALL SKID CONTROL SENSOR

(a) Clean the contacting surface of the axle hub and a new speed sensor.

NOTICE:

Do not stick any foreign objects to the sensor rotor.

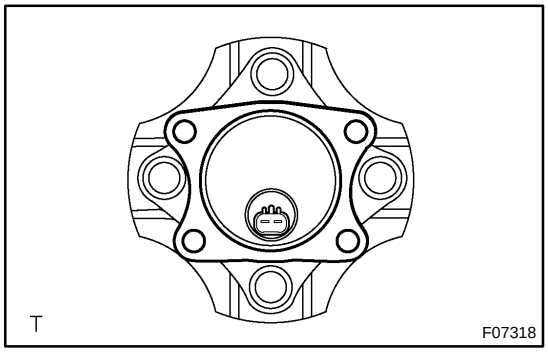

(b) Place the speed sensor on the axle hub so that the connector makes the lowest position under the on–vehicle condition.

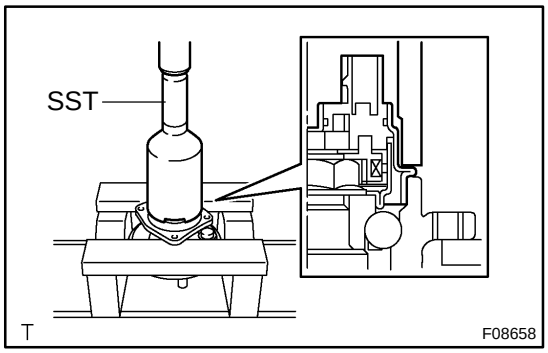

(c) Using SST and press, install the new speed sensor to the axle hub.

SST 09214–76011

9. INSTALL REAR AXLE HUB & BEARING ASSY LH (See page 30–63)

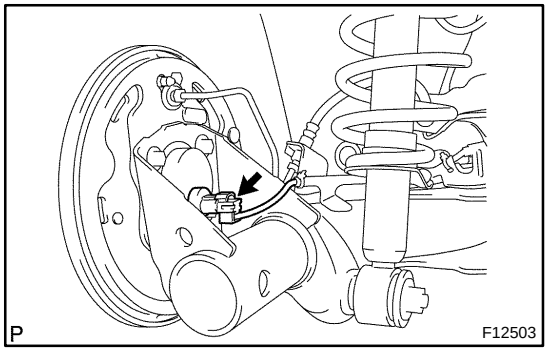

10. CONNECT SKID CONTROL SENSOR WIRE

(a) Connect the skid control sensor wire connector to the skid control sensor.

11. INSTALL REAR BRAKE DRUM SUB–ASSY (DRUM REAR BRAKE TYPE) (See page 32–33)

12. INSTALL REAR DISC (DISC REAR BRAKE TYPE) (See page 32–49)

13. INSTALL REAR DISC BRAKE CALIPER ASSY LH (DISC REAR BRAKE TYPE) (See page 32–49)

14. INSTALL REAR WHEEL

Torque: 103 N·m (1,050 kgf·cm, 76 ft·lbf)

15. INSPECT AND ADJUST REAR WHEEL ALIGNMENT (See page 27–6)

16. CHECK ABS SPEED SENSOR SIGNAL (See page 05–316)

PROPORTIONING VALVE ASSY

320JC–01

ON–VEHICLE INSPECTION

1. INSTALL LSPV GAUGE (SST) AND BLEED AIR

(a) Remove the bleeder plugs from the front and rear brake cylinder.

(b) Install the LSPV gauge (SST), and bleed the air.
SST 09709–29018

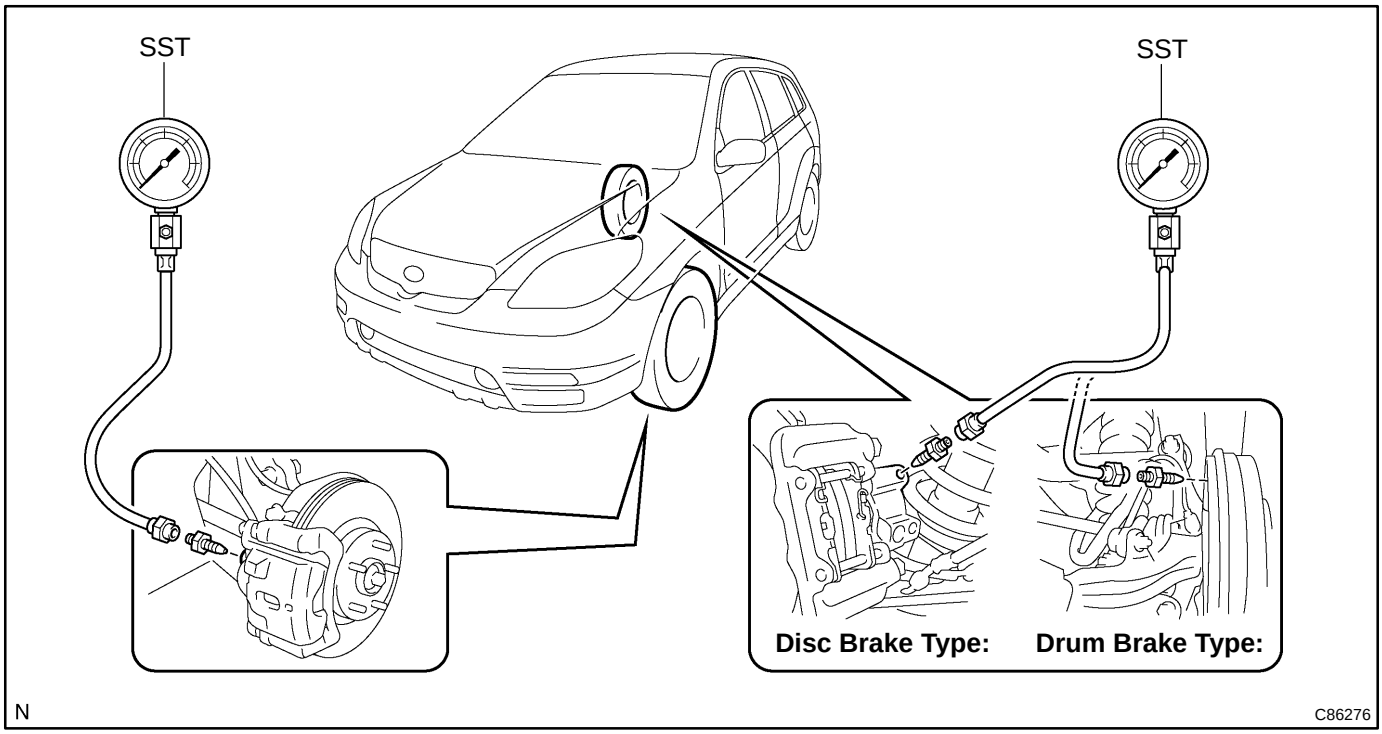

2. RAISE MASTER CYLINDER PRESSURE AND CHECK REAR WHEEL CYLINDER PRESSURE

Master cylinder pressure	Rear wheel cylinder pressure
2,452 kPa (25 kgf/cm^2, 356 psi)	2,452 kPa (25 kgf/cm^2, 356 psi)
4,413 kPa (45 kgf/cm^2, 639 psi)	3,177 kPa (32 kgf/cm^2, 460 psi)
7,355 kPa (75 kgf/cm^2, 1,065 psi)	4,266 kPa (44 kgf/cm^2, 618 psi)

HINT:

When inspecting the fluid pressure, inspect the left front and right rear together, and the right front and left rear together.

If the rear wheel cylinder pressure is improper, replace the proportioning valve assy.

3. REMOVE LSPV GAUGE (SST)

(a) Remove the LSPV gauge (SST).
SST 09709–29018

(b) Install the bleeder plugs.
Torque: 8.3 N·m (85 kgf·cm, 74 in.·lbf)

4. BLEED MASTER CYLINDER (See page 32–6)
SST 09023–00100

5. BLEED BRAKE LINE (See page 32–6)

6. CHECK FOR LEAKS

320JD–01

REPLACEMENT

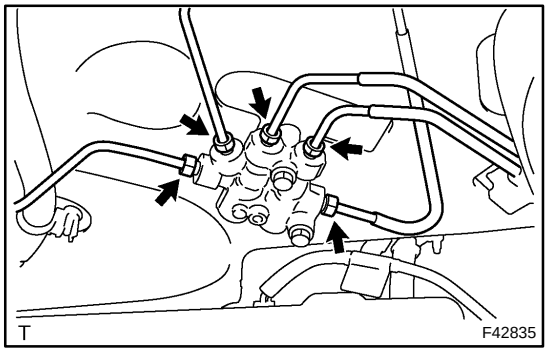

1. REMOVE PROPORTIONING VALVE ASSY

(a) Using SST, disconnect the 5 brake tubes from the proportioning valve assy.
SST 09023–00100

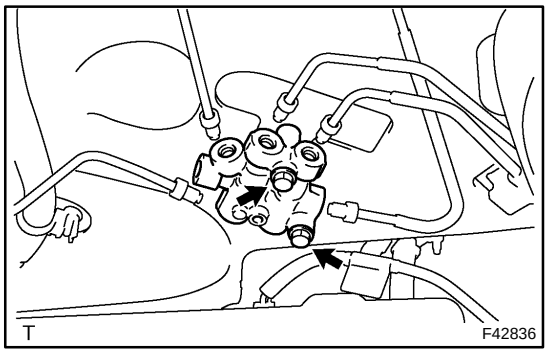

(b) Remove the 2 bolts and proportioning valve assy from the body.

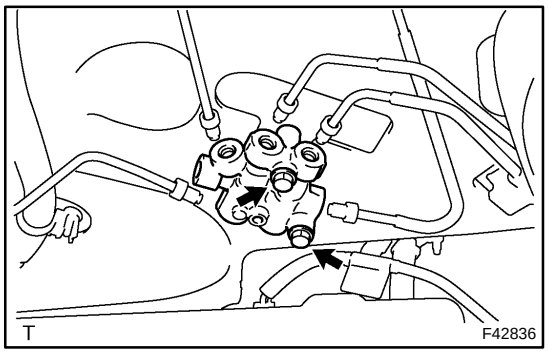

2. INSTALL PROPORTIONING VALVE ASSY

(a) Install the proportioning valve assy with the 2 bolts.
Torque: 5.4 N·m (55 kgf·cm, 48 in·lbf)

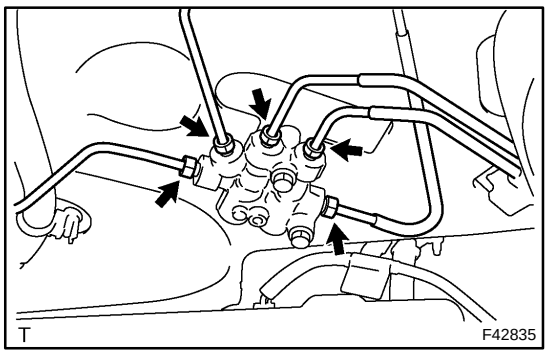

(b) Using SST, connect the 5 brake tubes to the proportioning valve assy.
SST 09023–00100
Torque: 15.2 N·m (155 kgf·cm, 11 ft·lbf)

3. FILL RESERVOIR WITH BRAKE FLUID

4. BLEED MASTER CYLINDER (See page 32–6)
SST 09023–00100

5. BLEED BRAKE LINE (See page 32–6)

6. CHECK FLUID LEVEL IN RESERVOIR

REAR DISC BRAKE

COMPONENTS

320JA–01

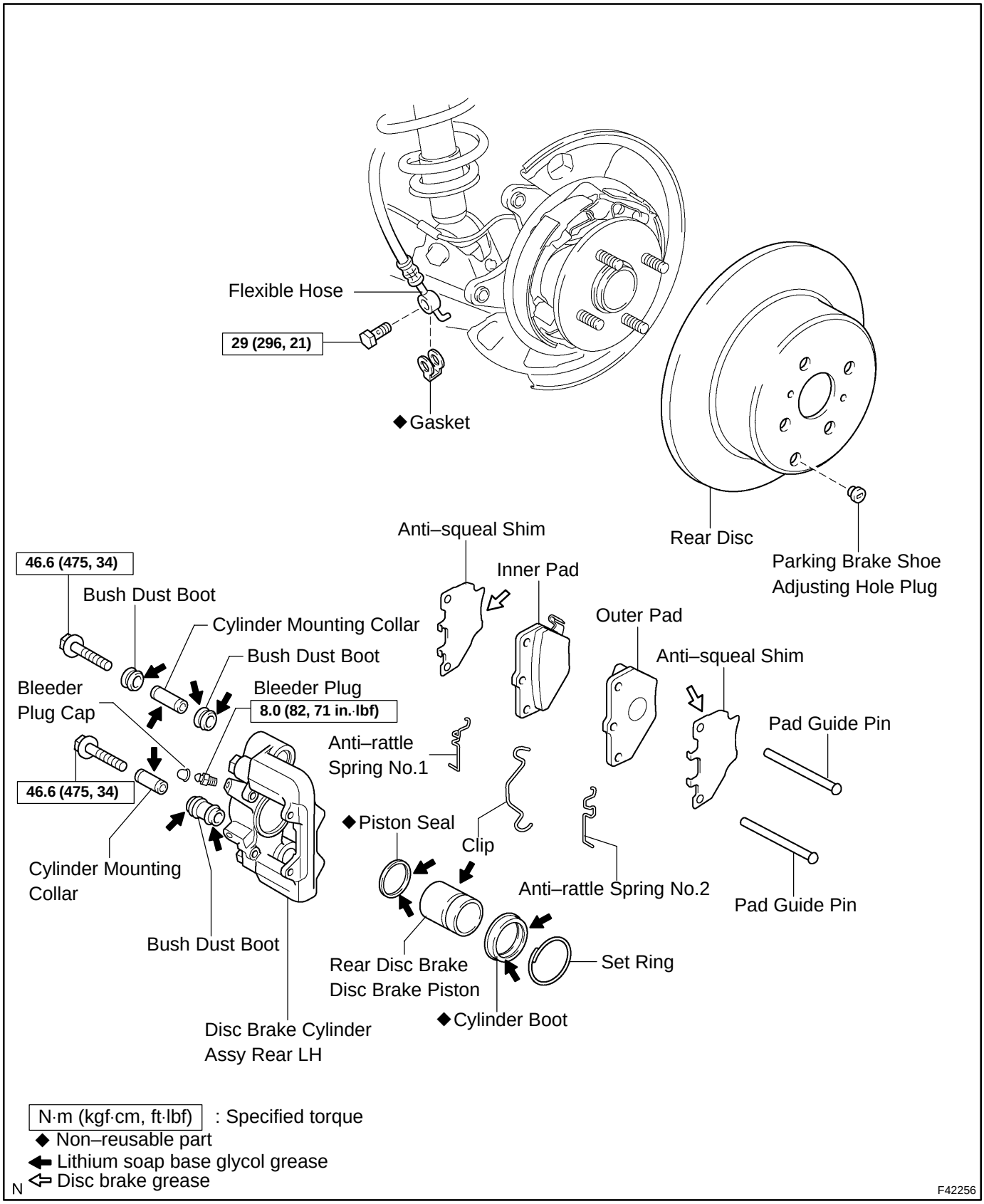

320JB–01

OVERHAUL

HINT:

Overhaul the RH side by the same procedure as the LH side.

1. REMOVE REAR WHEEL

2. DRAIN BRAKE FLUID

NOTICE:

Wash the brake fluid off immediately if it comes into contact with any painted surface.

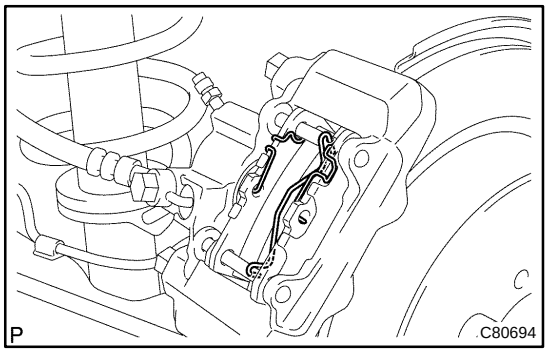

3. REMOVE DISC BRAKE PAD KIT REAR (PAD ONLY)

(a) Remove the clip, anti–rattle spring No.1 and anti–rattle spring No.2.

(b) Remove the 2 pad guide pins and disc brake pads with anti–squeal shims.

(c) Remove the anti–squeal shims from each pad.

4. REMOVE DISC BRAKE CYLINDER ASSY REAR LH

(a) Remove the union bolt and gasket from the disc brake cylinder, then disconnect the flexible hose from the disc brake cylinder.

HINT:

Gasket has 2 types: 2–piece type and 1–piece type.

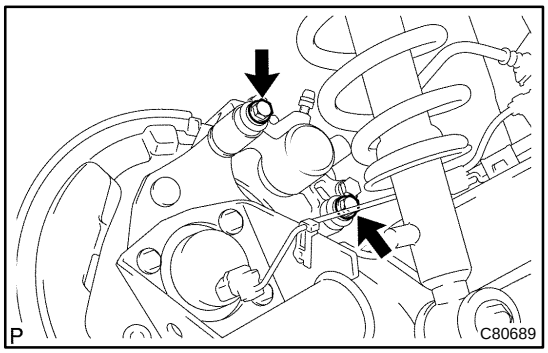

(b) Remove the 2 bolts and disc brake cylinder.

5. REMOVE REAR DISC BRAKE CYLINDER MOUNTING COLLAR

(a) Remove the 2 cylinder mounting collars from the disc brake cylinder.

6. REMOVE REAR DISC BRAKE BUSH DUST BOOT

(a) Remove the 3 bush dust boots.

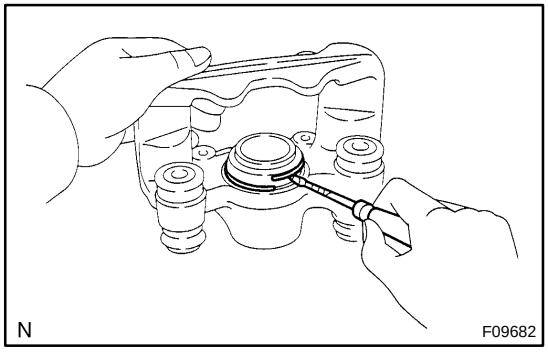

7. REMOVE CYLINDER BOOT

(a) Using a screwdriver, remove the set ring and cylinder boot.

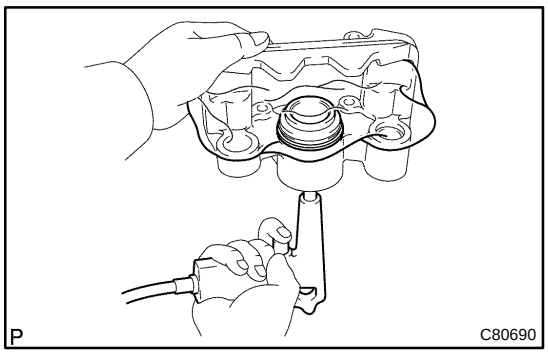

8. REMOVE REAR DISC BRAKE DISC BRAKE PISTON

(a) Place a piece of cloth or similar, between the piston and the disc brake cylinder.

(b) Use compressed air to remove the piston from the disc brake cylinder.

CAUTION:

Do not place your fingers in front of the piston when using compressed air.

NOTICE:

Do not spatter the brake fluid.

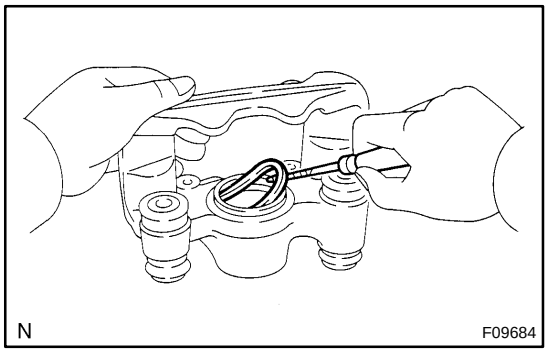

9. REMOVE PISTON SEAL

(a) Using a screwdriver, remove the piston seal from the brake cylinder.

NOTICE:

Do not damage the inner cylinder and the cylinder groove.

10. REMOVE REAR DISC BRAKE BLEEDER PLUG

(a) Remove the disc brake bleeder plug cap and bleeder plug from the rear disc brake cylinder.

11. INSPECT BRAKE CYLINDER AND PISTON

(a) Check the cylinder bore and piston for rust or scoring.

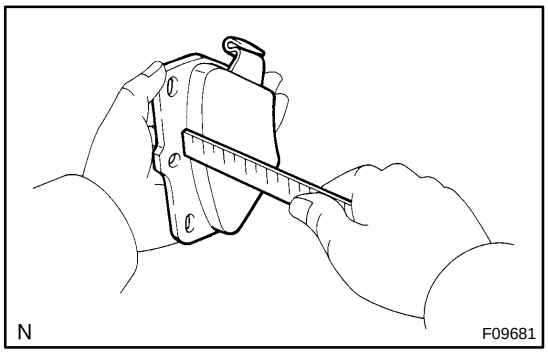

12. INSPECT PAD LINING THICKNESS

(a) Using a ruler, measure the pad lining thickness.
Standard thickness: 10.0 mm (0.394 in.)
Minimum thickness: 1.0 mm (0.039 in.)

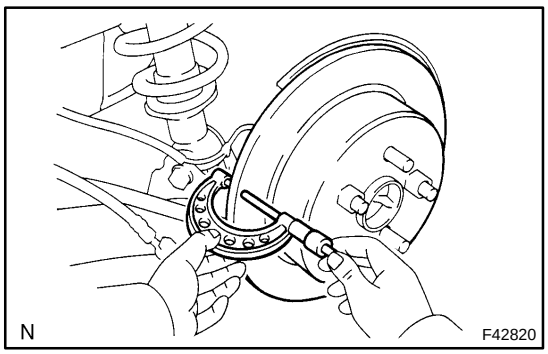

13. INSPECT DISC THICKNESS

(a) Using a micrometer, measure the disc thickness.
Standard thickness: 9.0 mm (0.354 in.)
Minimum thickness: 7.5 mm (0.295 in.)

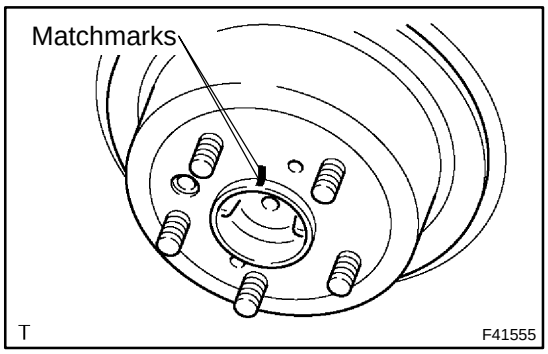

14. REMOVE REAR DISC

(a) Make matchmarks on the rear disc and the axle hub.

(b) Remove the rear disc.

15. INSTALL REAR DISC

(a) Aligning the matchmarks, install the rear disc.

HINT:

Select the installation position where the disc has the minimum runout.

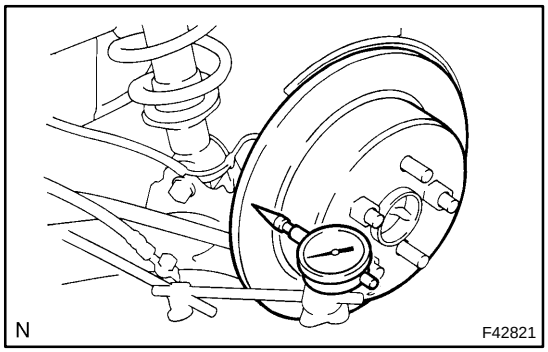

16. INSPECT DISC RUNOUT

(a) Temporarily fasten the disc with hub nuts.

Torque: 103 N·m (1,050 kgf·cm, 76 ft·lbf)

(b) Using a dial indicator, measure the disc runout 10 mm (0.39 in.) away from the outer edge of the disc.

Maximum disc runout: 0.15 mm (0.0059 in.)

(c) If the disc runout is the maximum value or greater, check the bearing play in the axial direction and check the axle hub runout (See page 30–3). If the bearing play and axle hub runout are normal, adjust the disc runout or grind it on a ”On–car” brake lathe.

17. TEMPORARY TIGHTEN REAR DISC BRAKE BLEEDER PLUG

(a) Temporarily tighten the bleeder plug, and install the bleeder plug cap to the disc brake cylinder.

18. INSTALL PISTON SEAL

(a) Apply the lithium soap base glycol grease on a new piston seal.

(b) Install the piston seal to the disc brake cylinder.

19. INSTALL REAR DISC BRAKE DISC BRAKE PISTON

(a) Apply the lithium soap base glycol grease on the piston.

(b) Install the piston to the disc brake cylinder.

NOTICE:

Do not screw the piston forcedly in the disc brake cylinder.

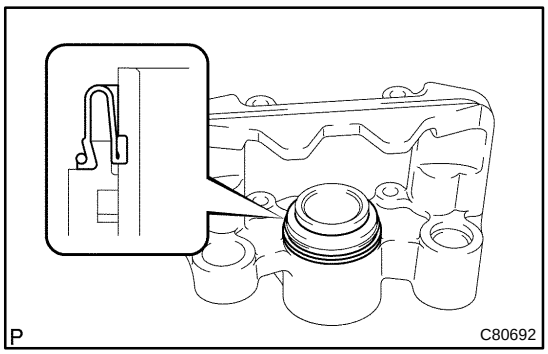

20. INSTALL CYLINDER BOOT

(a) Apply the lithium soap base glycol grease on a new cylinder boot.

(b) Install the cylinder boot to the disc brake cylinder.

HINT:

Install the boot securely to the grooves of the cylinder and piston.

(c) Using a screwdriver, install the set ring.

NOTICE:

Do not damage the cylinder boot.

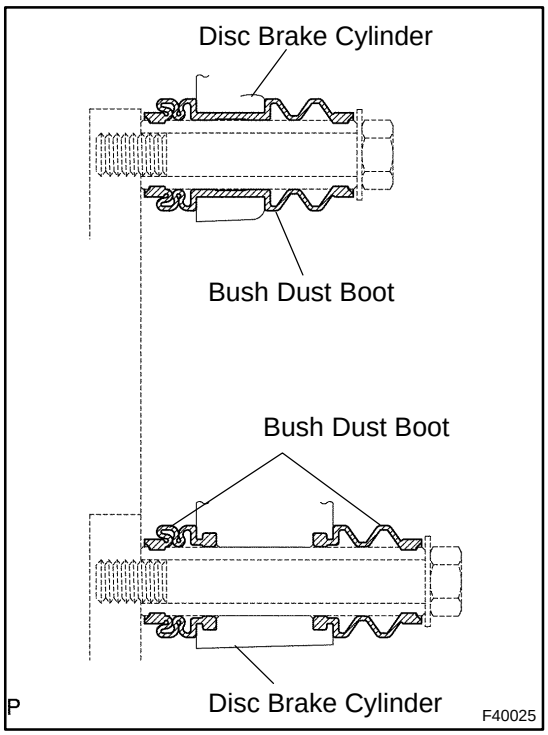

21. INSTALL REAR DISC BRAKE BUSH DUST BOOT

(a) Apply the lithium soap base glycol grease to seal surface of 3 new bush dust boots.

(b) Install the 3 bush dust boots to the disc brake cylinder.

22. INSTALL REAR DISC BRAKE CYLINDER MOUNTING COLLAR

(a) Install the 2 cylinder mounting collars.

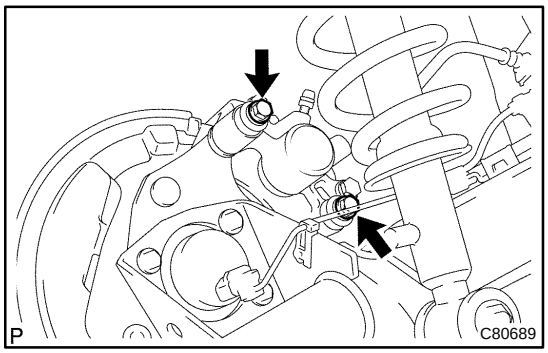

23. INSTALL DISC BRAKE CYLINDER ASSY REAR LH

(a) Install the disc brake cylinder with the 2 bolts.
Torque: 46.6 N·m (475 kgf·cm, 34 ft·lbf)

(b) Install a new gasket and flexible hose with the union bolt.
Torque: 29 N·m (296 kgf·cm, 21 ft·lbf)

HINT:

- Gasket has 2 types: 2–piece type and 1–piece type.
- Install the flexible hose lock securely in the lock hole in the brake cylinder.

24. INSTALL DISC BRAKE PAD KIT REAR (PAD ONLY)

NOTICE:

If necessary, replace the anti–squeal shim kit when replacing the brake pad.

(a) Apply disc brake grease to inside of anti–squeal shims, and install the anti–squeal shims on each pad.

(b) Install the inner pad with the pad wear indicator plate facing upward, and install the outer pad.

NOTICE:

There should be no oil or grease on the friction surface of the pads and the disc.

(c) Install the 2 pad guide pins.

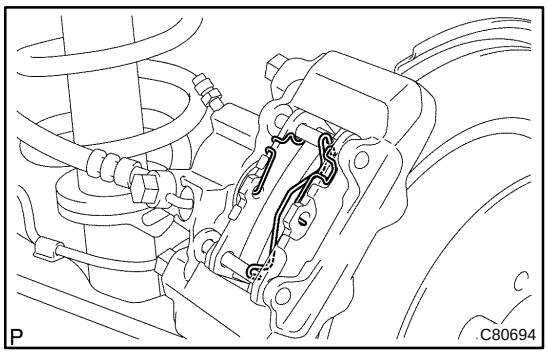

(d) Install the anti–rattle spring No. 1 anti–rattle spring No. 2 and clip.

25. FILL RESERVOIR WITH BRAKE FLUID

26. BLEED MASTER CYLINDER (See page 32–6)
SST 09023–00100

27. BLEED BRAKE LINE (See page 32–6)

28. CHECK FLUID LEVEL IN RESERVOIR

29. CHECK BRAKE FLUID LEAKAGE

30. INSTALL REAR WHEEL
Torque: 103 N·m (1,050 kgf·cm, 76 ft·lbf)

PARKING BRAKE CABLE ASSY NO.3 (4WD)

3307Q–01

COMPONENTS

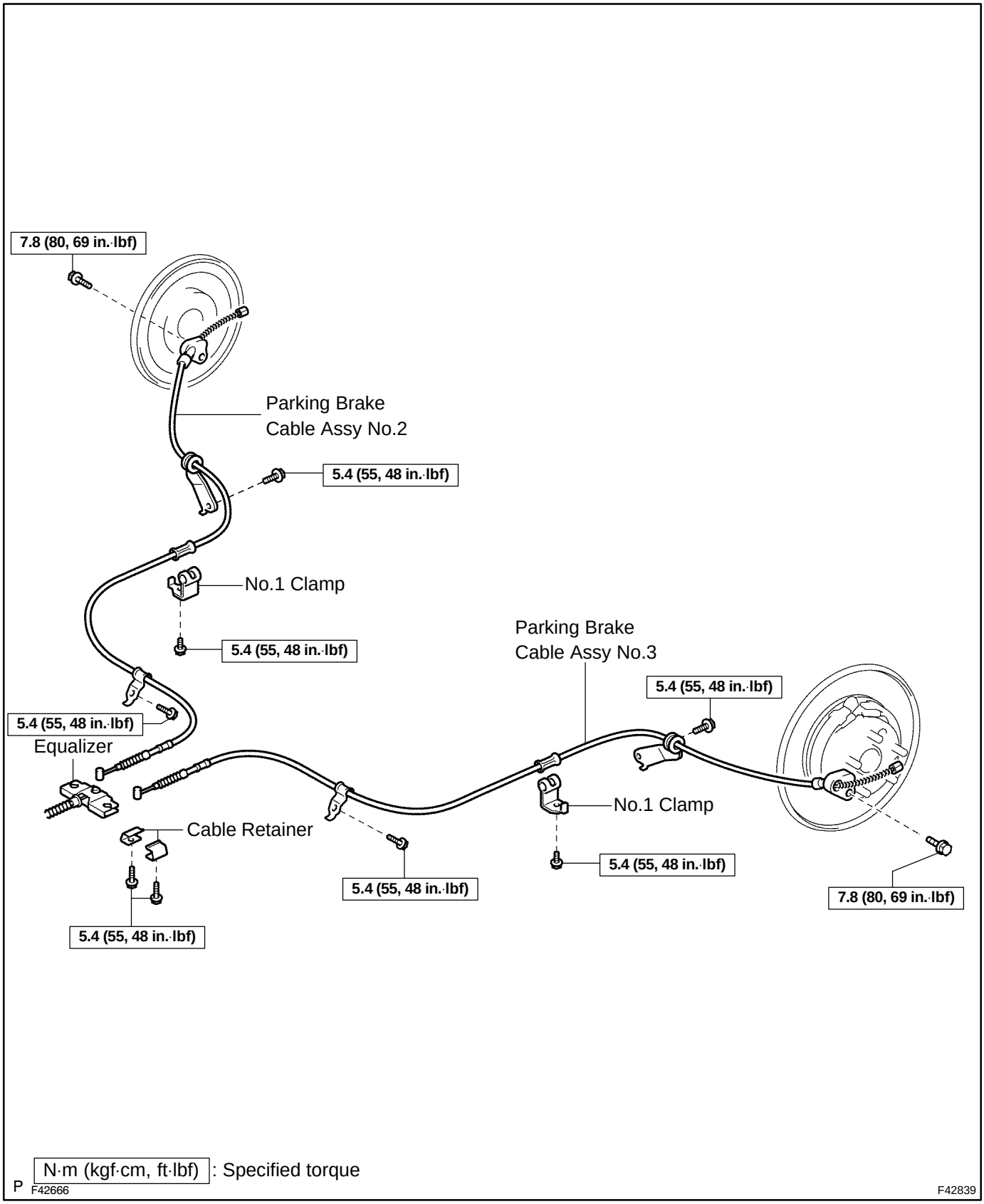

3307R–01

REPLACEMENT

HINT:

For parking brake cable assy No.2, perform the same procedure to the parking brake cable assy No.3.

1. **REMOVE REAR WHEEL**
2. **REMOVE REAR BRAKE DRUM SUB–ASSY (See page 32–41)**
3. **REMOVE PARKING BRAKE SHOE STRUT SET LH (See page 32–41)**
4. **REMOVE FRONT BRAKE SHOE (See page 32–41)**
   SST 09718–00010
5. **REMOVE REAR BRAKE SHOE (See page 32–41)**
   SST 09718–00010

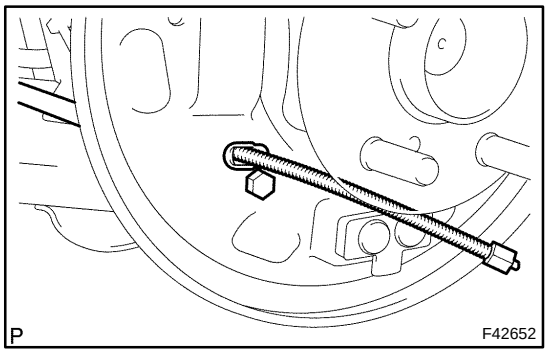

6. **DISCONNECT PARKING BRAKE CABLE ASSY NO.3**

(a) Remove the bolt, and disconnect the parking brake cable assy No.3 from the backing plate.

7. **REMOVE PARKING BRAKE CABLE ASSY NO.3**

(a) Remove the 4 bolts, cable retainer and No.1 clamp from the body.

(b) Disconnect the parking brake cable assy No.3 from the equalizer, and remove the parking brake cable assy No.3.

8. **INSTALL PARKING BRAKE CABLE ASSY NO.3**

(a) Connect the parking brake cable assy No.3 to the equalizer.

(b) Install the parking brake cable assy No.3 with the 4 bolts, and install the cable retainer and No.1 clamp.
Torque: 5.4 N·m (55 kgf·cm, 48 in.·lbf)

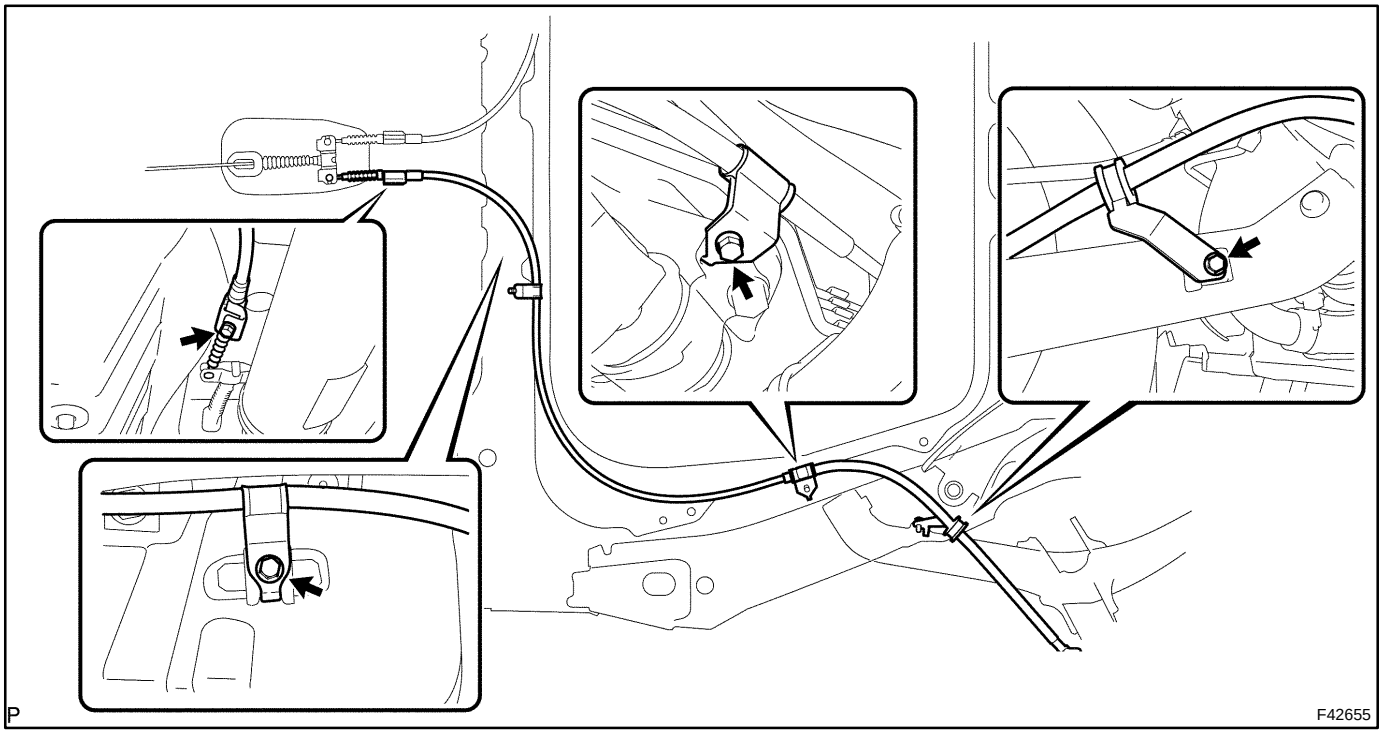

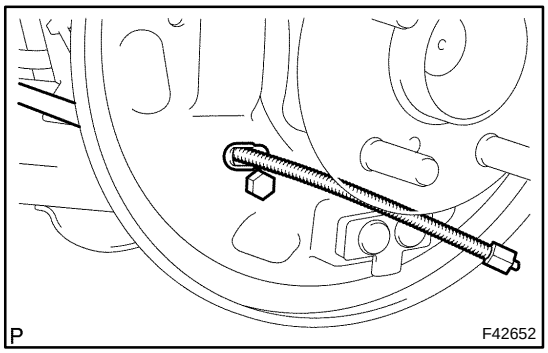

9. CONNECT PARKING BRAKE CABLE ASSY NO.3
(a) Connect the parking brake cable assy No.3 to the backing plate with the bolt.
Torque: 7.8 N·m (80 kgf·cm, 69 in.·lbf)

10. APPLICATION HIGH TEMPERATURE GREASE (See page 32–41)
11. INSTALL REAR BRAKE SHOE (See page 32–41)
SST 09718–00010
12. INSTALL FRONT BRAKE SHOE (See page 32–41)
SST 09718–00010
13. INSTALL PARKING BRAKE SHOE STRUT SET LH (See page 32–41)
14. CHECK REAR DRUM BRAKE INSTALLATION (See page 32–41)
15. INSTALL REAR BRAKE DRUM SUB–ASSY (See page 32–41)
16. ADJUST REAR DRUM BRAKE SHOE CLEARANCE (See page 32–41)
17. INSTALL REAR WHEEL
Torque: 103 N·m (1,050 kgf·cm, 76 ft·lbf)
18. INSPECT PARKING BRAKE LEVER TRAVEL (See page 33–2)
19. ADJUST PARKING BRAKE LEVER TRAVEL (See page 33–2)
20. CHECK EXHAUST LEAKAGE

3307K–01

ADJUSTMENT

1. REMOVE REAR WHEEL

2. ADJUST PARKING BRAKE SHOE CLEARANCE

DRUM REAR BRAKE TYPE (FF) : See page 32–33

DRUM REAR BRAKE TYPE (4WD) : See page 32–41

DISC REAR BRAKE TYPE : See page 33–18

3. INSTALL REAR WHEEL

Torque: 103 N·m (1,050 kgf·cm, 76 ft·lbf)

4. INSPECT PARKING BRAKE LEVER TRAVEL

(a) Pull the parking brake lever to the fully applied position, and count the number of clicks.

Parking brake lever travel: 5 – 8 clicks at 196 N (20 kgf, 44.1 lbf)

5. ADJUST PARKING BRAKE LEVER TRAVEL

(a) Remove the rear console box sub–assy (See page 33–4).

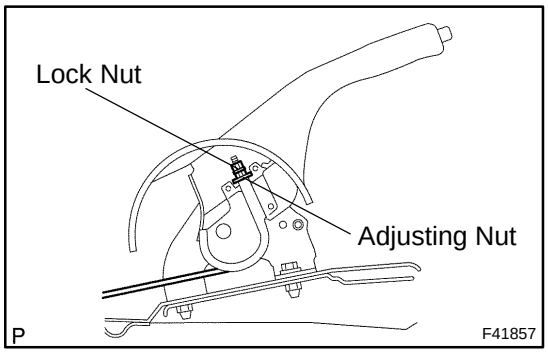

(b) Loosen the lock nut and turn the adjusting nut until the lever travel turns correct.

(c) Tighten the lock nut.

Torque: 5.0 N·m (55 kgf·cm, 44 in.·lbf)

(d) Install the rear console box sub–assy (See page 33–4).

PARKING BRAKE SYSTEM

3307J–01

PROBLEM SYMPTOMS TABLE

Use the table below to help you find the cause of the problem. The numbers indicate the probability of the problems in descending order. Check each part in order. If necessary, replace these parts.

Symptom	Suspect Area	See page
Brake drag	1. Parking brake lever travel (Out of adjustment)	33–2
	2. Parkingb brake wire (Sticing) FF:	33–8
		33–11
	4WD:	33–8
		33–15
	3. Parking brake shoe clearance (Out of adjustment)	
	Drum rear brake type (FF):	32–33
	(4WD):	32–41
	Disc rear brake type:	33–18
	4. Parking brake shoe lining (Cracked or distorted)	
	Drum rear brake type (FF):	32–33
	(4WD):	32–41
	Disc rear brake type:	33–18
	5. Tension or return spring (Dameged)	
	Drum rear brake type (FF):	32–33
	(4WD):	32–41
	Disc rear brake type:	33–18

PARKING BRAKE ASSY (2ZZ–GE)

3307S–01

COMPONENTS

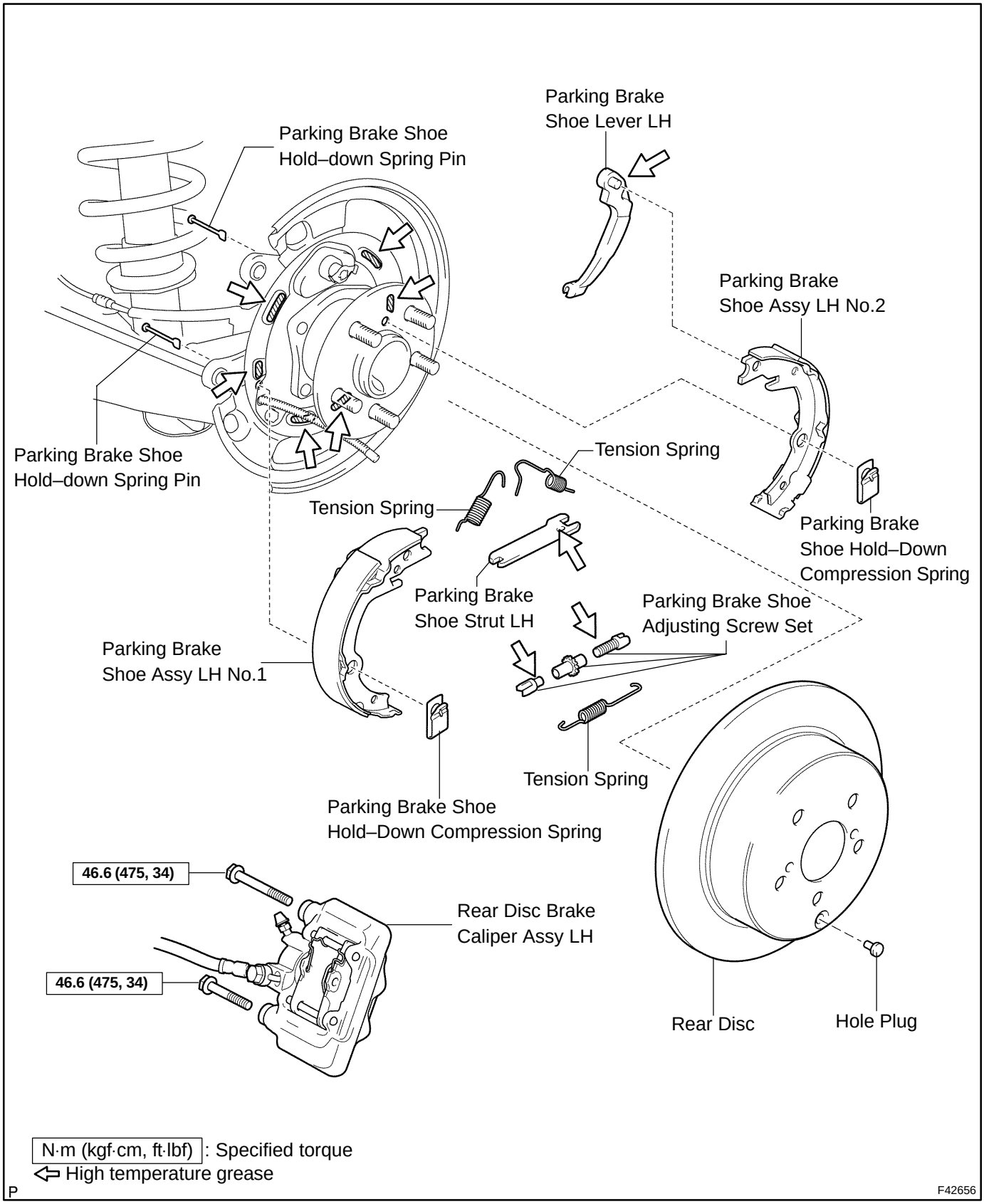

3307T–01

OVERHAUL

HINT:

Overhaul the RH side by the same procedures as LH side.

1. REMOVE REAR WHEEL

2. DISCONNECT REAR DISC BRAKE CALIPER ASSY LH (See page 32–49)

3. REMOVE REAR DISC (See page 32–49)

HINT:

If the disc cannot be removed easily, turn the shoe adjuster until the wheel turns freely.

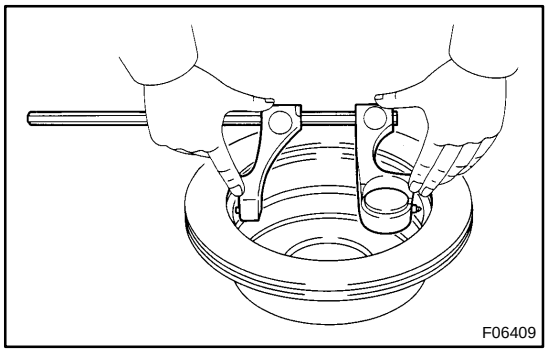

4. INSPECT BRAKE DISC INSIDE DIAMETER

(a) Using a brake drum gauge or equivalent, measure the inside diameter of the disc.

Standard inside diameter: 173 mm (6.81 in.)

Maximum inside diameter: 174 mm (6.85 in.)

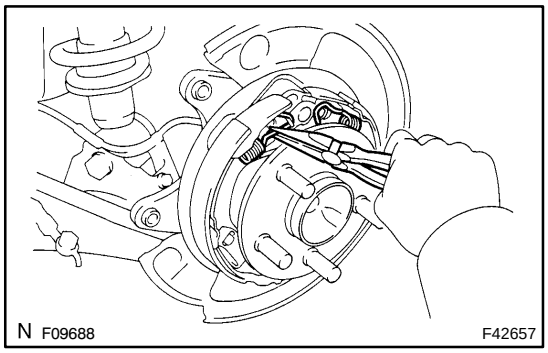

5. REMOVE PARKING BRAKE SHOE STRUT LH

(a) Using a needle–nose pliers, remove the 2 upper side tension springs.

(b) Remove the parking brake shoe strut LH.

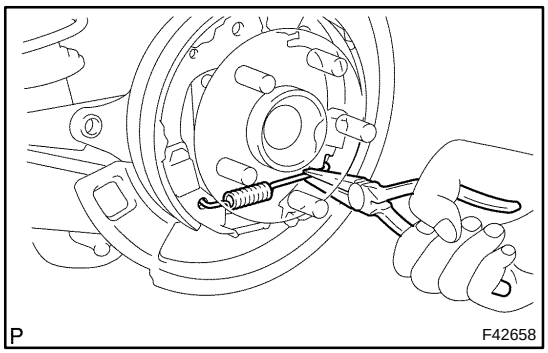

6. REMOVE PARKING BRAKE SHOE ADJUSTING SCREW SET

(a) Using a needle–nose pliers, remove the anchor side tension spring.

(b) Remove the shoe adjusting screw set.

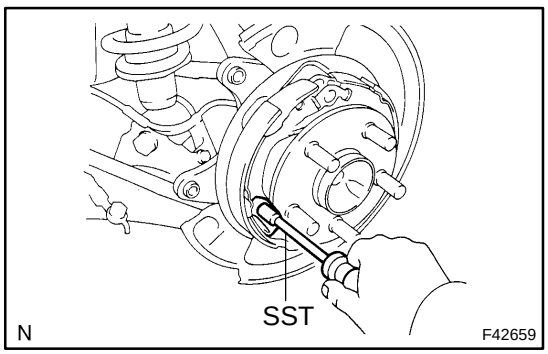

7. REMOVE PARKING BRAKE SHOE ASSY LH NO.1

(a) Using SST, remove the parking brake shoe hold–down compression spring, parking brake shoe hold–down spring pin and parking brake shoe assy LH No.1.

SST 09718–00010

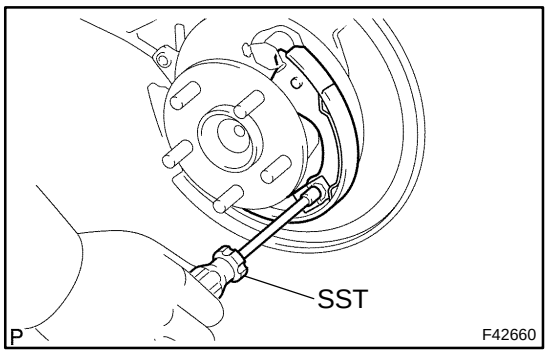

8. REMOVE PARKING BRAKE SHOE ASSY LH NO.2

(a) Using SST, remove the parking brake shoe hold–down compression spring and parking brake shoe hold–down spring pin.
SST 09718–00010

(b) Disconnect the parking brake shoe assy LH No.2 from the parking brake shoe lever LH, and remove the parking brake shoe LH No.2.

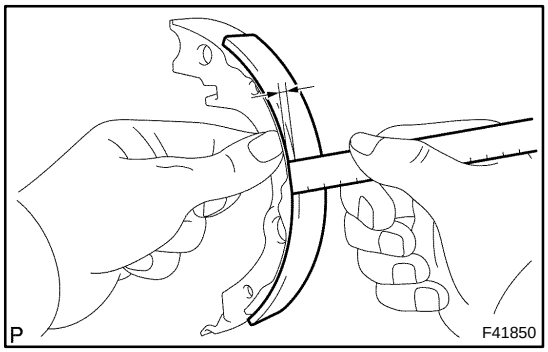

9. INSPECT PARKING BRAKE SHOE LINING THICKNESS

(a) Using a ruler, measure the thickness of the shoe lining.
Standard thickness: 3.5 mm (0.138 in.)
Minimum thickness: 1.0 mm (0.039 in.)

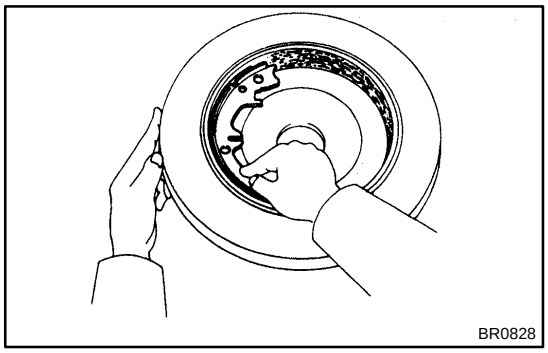

10. INSPECT BRAKE DISC AND PARKING BRAKE SHOE LINING FOR PROPER CONTACT

(a) Apply chalk to the inside surface of the disc, then grind down the brake shoe lining to fit.

If the contact between the brake disc and the shoe lining is improper, correct it using a brake shoe grinder or replace the brake shoe assembly.

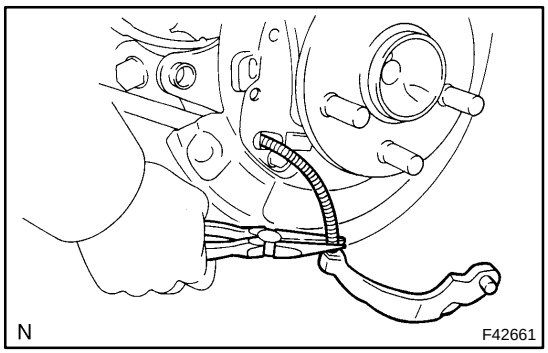

11. REMOVE PARKING BRAKE SHOE LEVER LH

(a) Using a needle–nose pliers, disconnect the parking brake cable assy No.3 and remove the parking brake shoe lever LH.

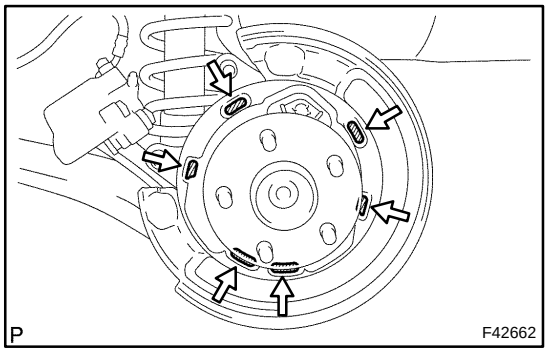

12. APPLY HIGH TEMPERATURE GREASE

(a) Apply the high temperature grease to the shoe attached surface of backing plate.

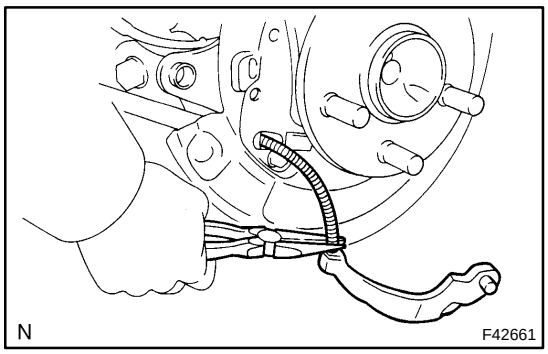

13. INSTALL PARKING BRAKE SHOE LEVER LH

(a) Using a needle–nose pliers, connect the parking brake cable assy No.3 to the parking brake shoe lever LH.

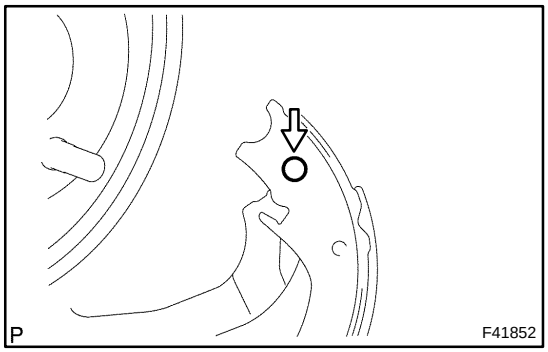

14. INSTALL PARKING BRAKE SHOE ASSY LH NO.2

(a) Apply the high temperature grease to the contact part of the parking brake shoe and parking brake shoe lever.

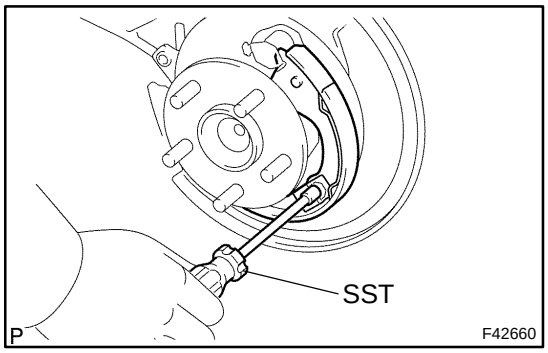

(b) Using SST, install the parking brake shoe LH No.2 with the parking brake shoe hold–down compression spring and parking brake shoe hold–down spring pin.
SST 09718–00010

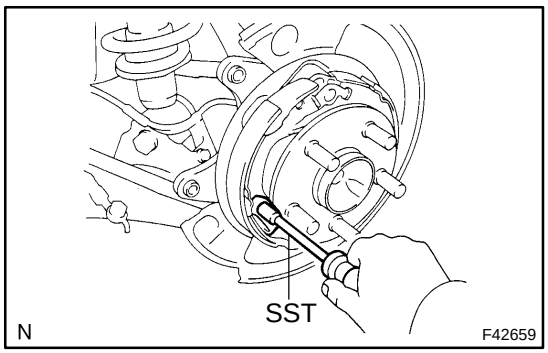

15. INSTALL PARKING BRAKE SHOE ASSY LH NO.1

(a) Using SST, install the parking brake shoe LH No.1 with the parking brake shoe hold–down compression spring and parking brake shoe hold–down spring pin.
SST 09718–00010

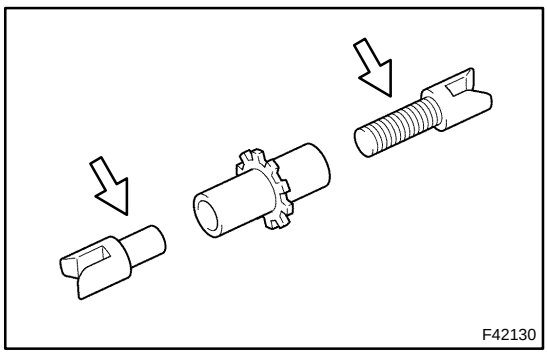

16. INSTALL PARKING BRAKE SHOE ADJUSTING SCREW SET

(a) Apply the high temperature grease to the adjusting bolt and support piece.

(b) Install the parking brake shoe adjusting screw set LH.

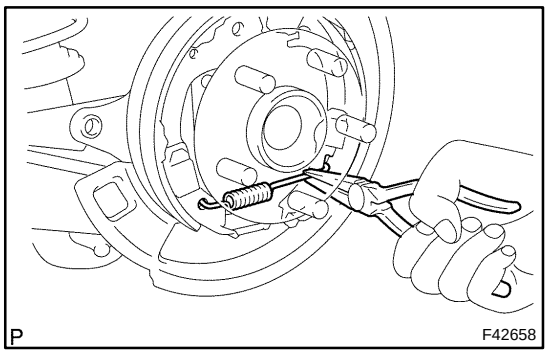

(c) Using a needle–nose pliers, install the tension spring.

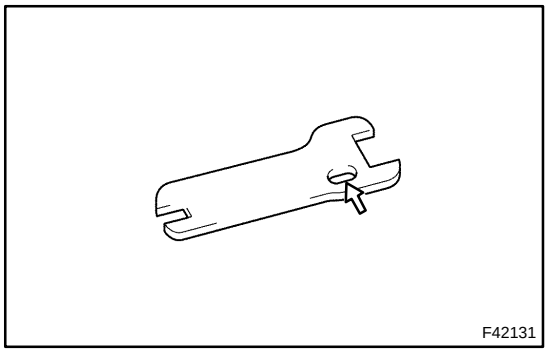

17. INSTALL PARKING BRAKE SHOE STRUT LH

(a) Apply the high temperature grease to the contact part of the shoe strut and tension spring.

(b) Install the parking brake shoe strut LH.

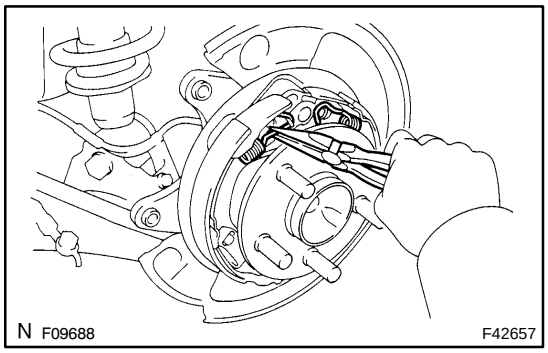

(c) Using a needle–nose pliers, install the 2 upper side tension springs.

HINT:

Install the 2 tension spring securely to the grooves of the shoe strut.

18. CHECK PARKING BRAKE INSTALLATION

(a) Check that each part is installed properly.

NOTICE:

There should be no oil or grease on the friction surface of the shoe lining and disc.

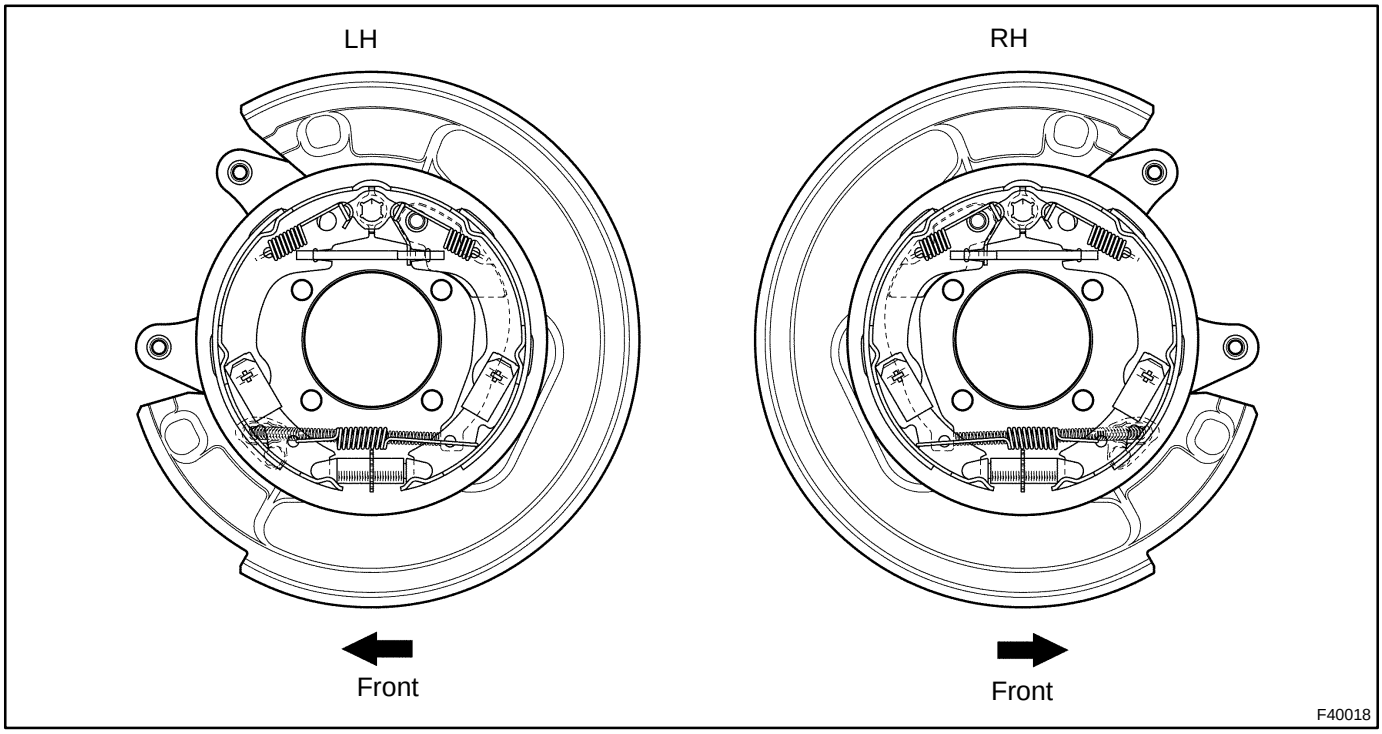

19. INSTALL REAR DISC (See page 32–49)

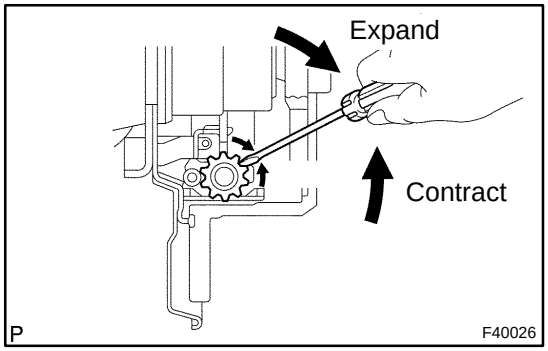

20. ADJUST PARKING BRAKE SHOE CLEARANCE

(a) Temporarily install the hub nuts.

(b) Remove the hole plug, and turn the adjuster and expand the shoes until the disc locks.

(c) Contract the shoe adjuster until the disc can rotate smoothly.

Standard : Return 8 notches

(d) Check that there is no brake drag.

(e) Install the hole plug.

21. CONNECT REAR DISC BRAKE CALIPER ASSY LH (See page 32–49)

22. INSTALL REAR WHEEL

Torque: 103 N·m (1,050 kgf·cm, 76 ft·lbf)

23. INSPECT PARKING BRAKE LEVER TRAVEL (See page 33–2)

24. ADJUST PARKING BRAKE LEVER TRAVEL (See page 33–2)

PARKING BRAKE LEVER SUB–ASSY

3307L–01

COMPONENTS

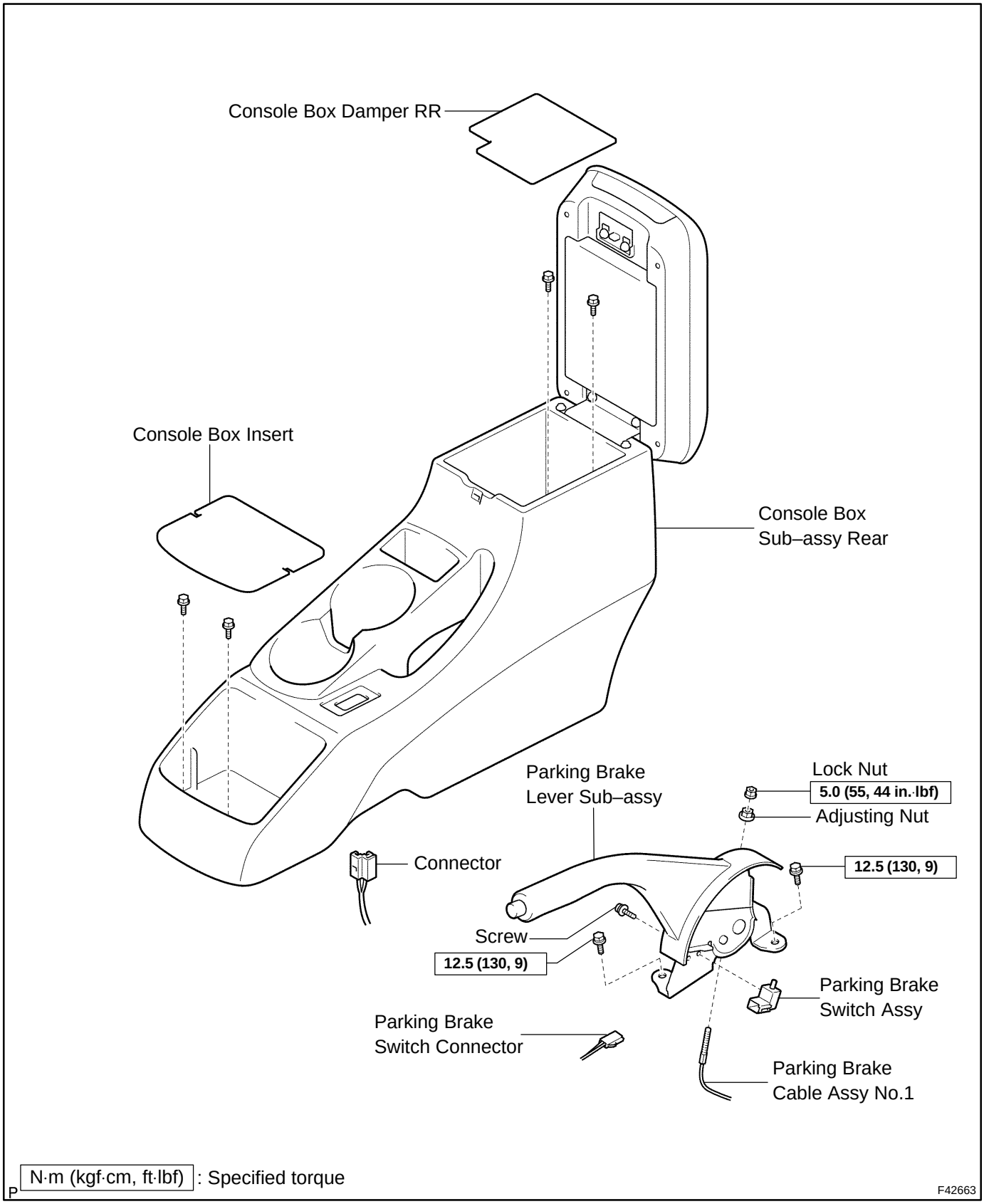

N·m (kgf·cm, ft·lbf) : Specified torque

P

F42663

3307M–01

REPLACEMENT

1. REMOVE CONSOLE BOX ASSY REAR

(a) Remove the console box insert and console box damper RR.

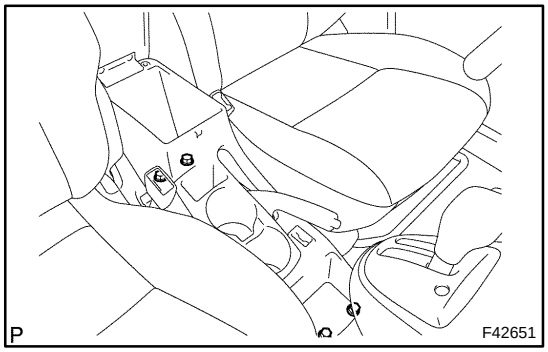

(b) Remove the 4 bolts.

(c) Disconnect the connector, and remove the console box assy rear.

2. REMOVE PARKING BRAKE LEVER SUB–ASSY

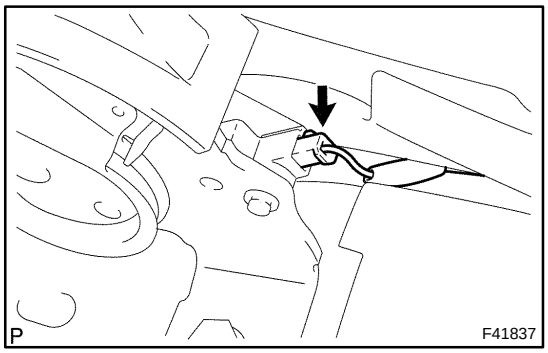

(a) Disconnect the parking brake switch connector from the parking brake switch.

(b) Remove the lock nut and adjusting nut from the parking brake cable assy No.1.

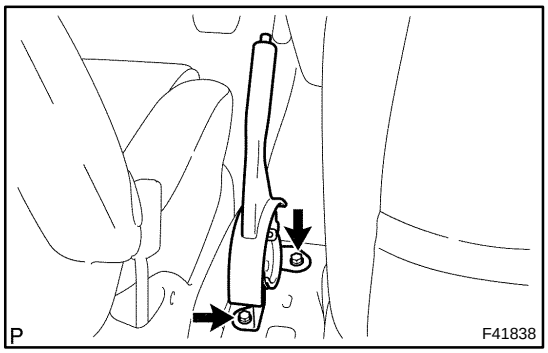

(c) Remove the 2 bolts.

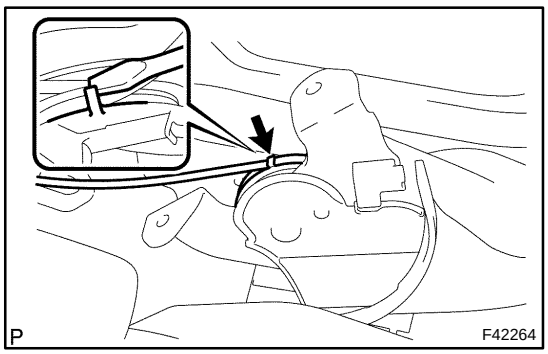

(d) Using a screwdriver, raise the pick on the parking brake lever, and remove the parking brake cable assy No.1 from the parking brake lever.

(e) Remove the parking brake lever from the body.

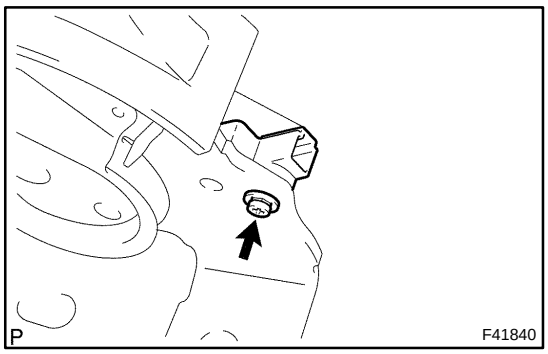

3. REMOVE PARKING BRAKE SWITCH ASSY

(a) Remove the screw and parking brake switch assy.

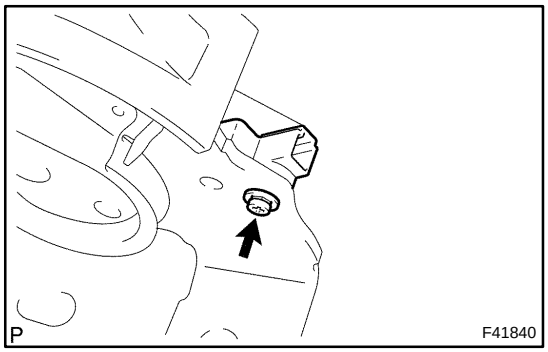

4. INSTALL PARKING BRAKE SWITCH ASSY

(a) Install the parking brake switch to the parking brake lever sub–assy with the screw.

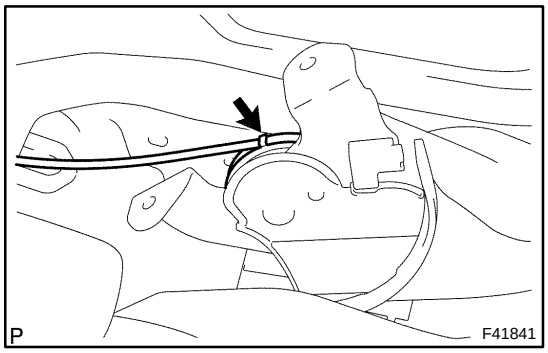

5. INSTALL PARKING BRAKE LEVER SUB–ASSY

(a) Install the parking brake cable assy No.1 to the parking brake lever, temporarily tighten the adjusting nut and lock nut.

(b) Using a screwdriver, fix the parking brake cable No.1 to the pick.

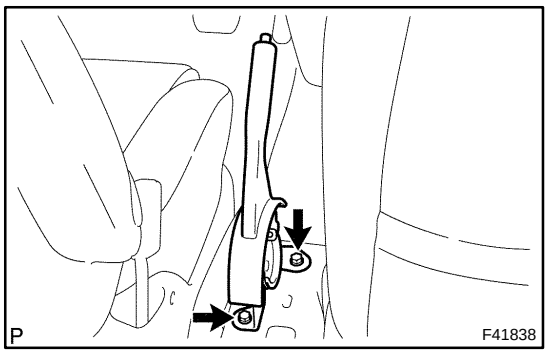

(c) Install the parking brake lever with the 2 bolts.
Torque: 12.5 N·m (130 kgf·cm, 9 ft·lbf)

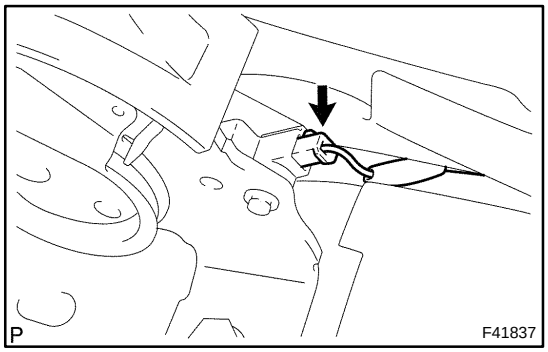

(d) Connect the parking brake switch connector to the parking brake switch.

6. INSPECT PARKING BRAKE LEVER TRAVEL (See page 33–2)

7. ADJUST PARKING BRAKE LEVER TRAVEL (See page 33–2)

8. INSTALL CONSOLE BOX ASSY REAR

(a) Connect the connector to the console box assy rear.

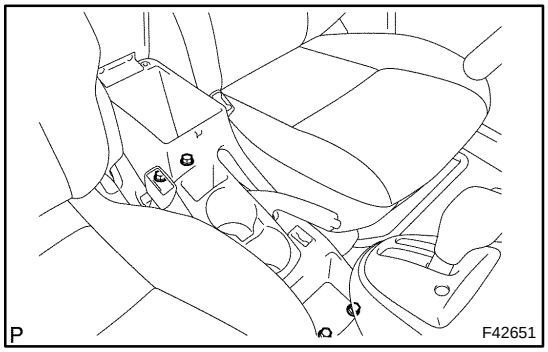

(b) Install the console box assy with the 4 bolts.

(c) Install the console box insert and console box damper RR.

PARKING BRAKE CABLE ASSY NO.1

3307N–01

COMPONENTS

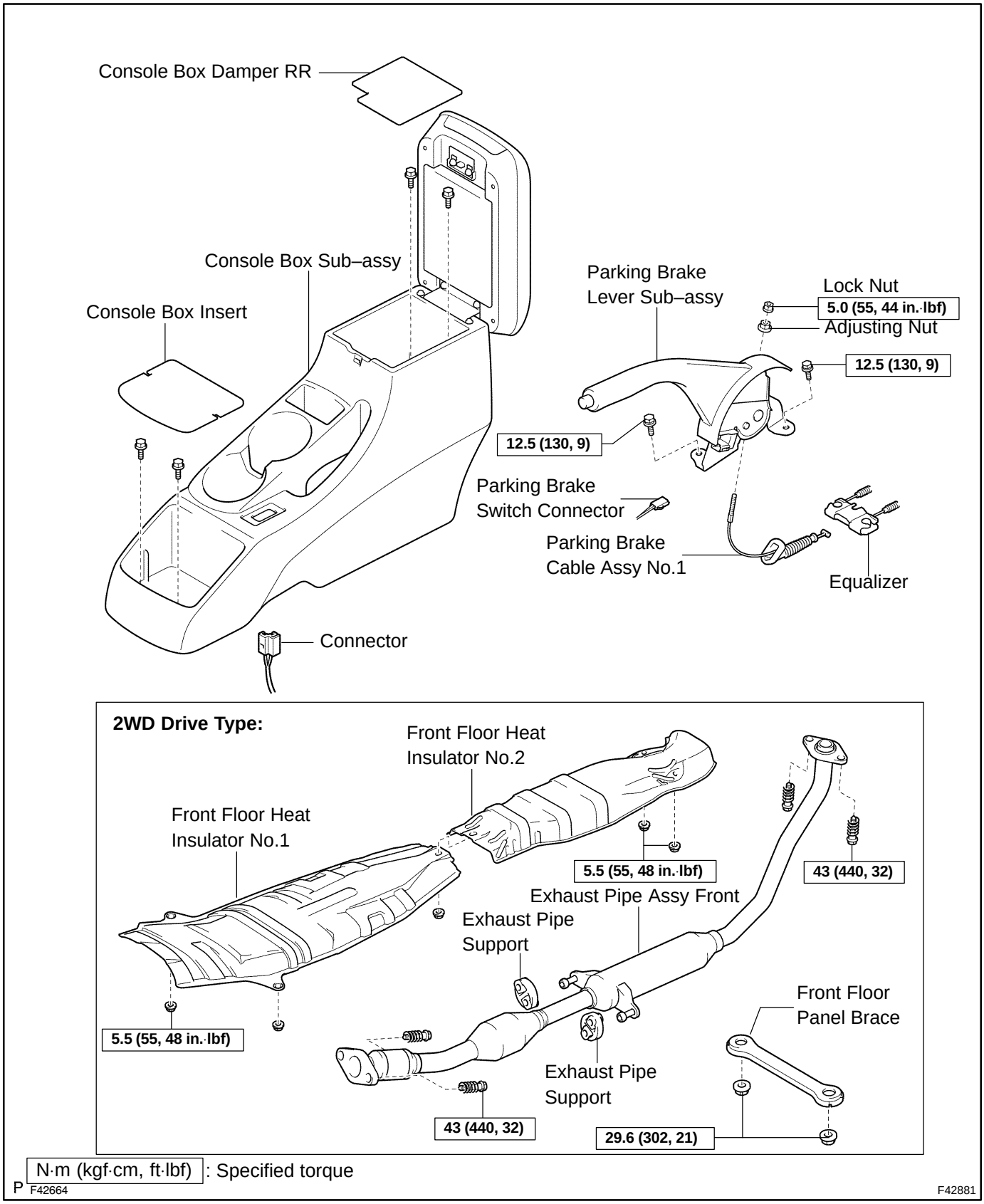

3307O–01

REPLACEMENT

1. **REMOVE CONSOLE BOX ASSY REAR (See page 33–4)**
2. **REMOVE PARKING BRAKE LEVER SUB–ASSY (See page 33–4)**
3. **REMOVE EXHAUST PIPE ASSY FRONT (2WD DRIVE TYPE)**
   1ZZ–FE ENGINE TYPE: See page 15–4
   2ZZ–GE ENGINE TYPE: See page 15–9

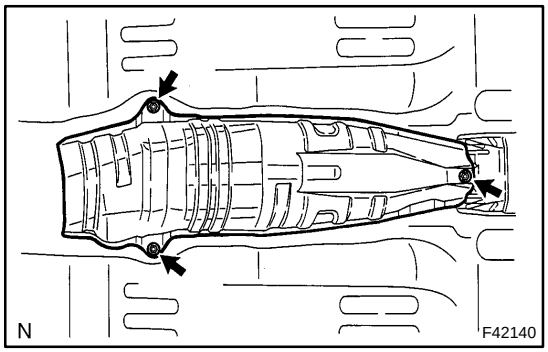

4. **REMOVE FRONT FLOOR HEAT INSULATOR NO.1 (2WD DRIVE TYPE)**

(a) Remove the 3 nuts and front floor heat insulator No.1.

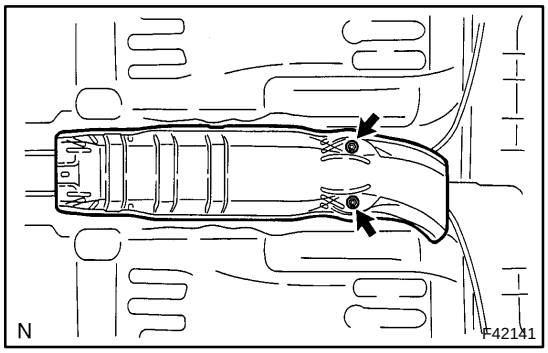

5. **REMOVE FRONT FLOOR HEAT INSULATOR NO.2 (2WD DRIVE TYPE)**

(a) Remove the 2 nuts and front floor heat insulator No.2.

6. **REMOVE PARKING BRAKE CABLE ASSY NO.1**

(a) Disconnect the parking brake cable assy No.1 from the equalizer and remove the parking brake cable assy No.1.

7. **INSTALL PARKING BRAKE CABLE ASSY NO.1**

(a) Connect the parking brake cable assy No.1 to the equalizer and install the parking brake cable assy No.1.

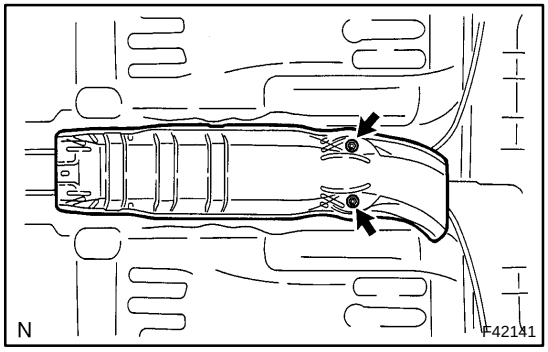

8. **INSTALL FRONT FLOOR HEAT INSULATOR NO.2 (2WD DRIVE TYPE)**

(a) Install the front floor heat insulator No.2 with the 2 nuts.
Torque: 5.5 N·m (55 kgf·cm, 48 in.·lbf)

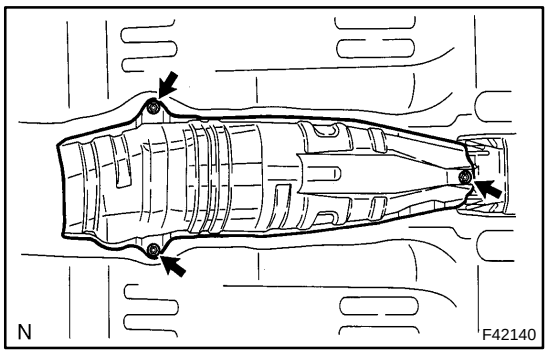

9. INSTALL FRONT FLOOR HEAT INSULATOR NO.1 (2WD DRIVE TYPE)

(a) Install the front floor heat insulator No.1 with the 3 nuts.
Torque: 5.5 N·m (55 kgf·cm, 48 in.·lbf)

10. INSTALL EXHAUST PIPE ASSY FRONT (2WD DRIVE TYPE)
1ZZ–FE ENGINE TYPE: See page 15–4
2ZZ–GE ENGINE TYPE: See page 15–9

11. INSTALL PARKING BRAKE LEVER SUB–ASSY (See page 33–4)

12. INSPECT PARKING BRAKE LEVER TRAVEL (See page 33–2)

13. ADJUST PARKING BRAKE LEVER TRAVEL (See page 33–2)

14. INSTALL CONSOLE BOX ASSY REAR (See page 33–4)

PARKING BRAKE CABLE ASSY NO.3 (FF)

3307P–01

COMPONENTS

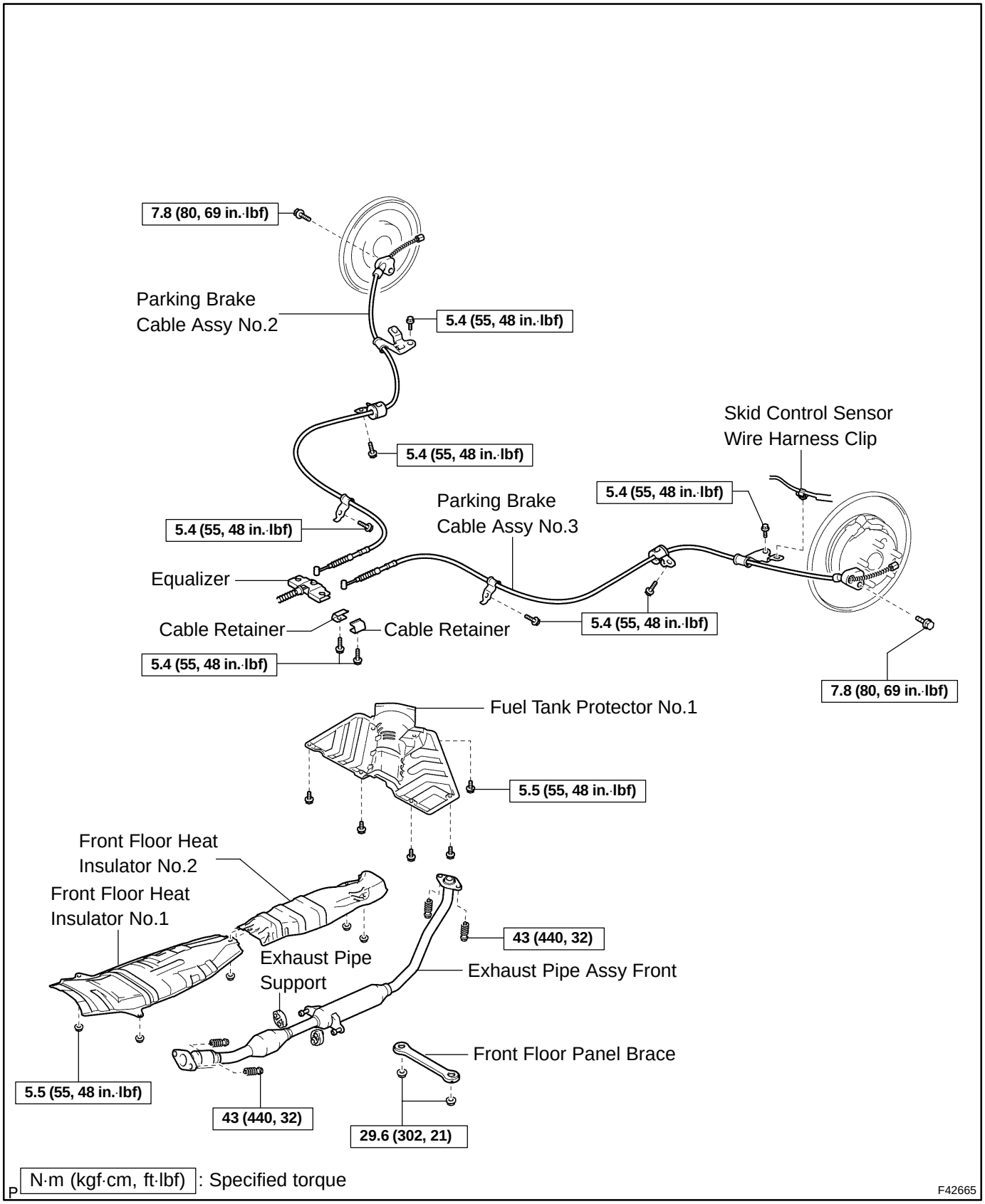

N·m (kgf·cm, ft·lbf) : Specified torque

F42665

33018–04

REPLACEMENT

HINT:

For parking brake cable assy No.2, perform the same procedure to the parking brake cable assy No.3.

1. **REMOVE REAR WHEEL**
2. **REMOVE REAR BRAKE DRUM SUB–ASSY (DRUM REAR BRAKE TYPE) (See page 32–33)**
3. **REMOVE FRONT BRAKE SHOE (DRUM REAR BRAKE TYPE) (See page 32–33)**
   SST 09718–00010, 09921–00010
4. **REMOVE PARKING BRAKE SHOE STRUT SET LH (DRUM REAR BRAKE TYPE) (See page 32–33)**
5. **REMOVE REAR BRAKE AUTOMATIC ADJUST LEVER LH (DRUM REAR BRAKE TYPE) (See page 32–33)**
6. **REMOVE REAR BRAKE SHOE (DRUM REAR BRAKE TYPE) (See page 32–33)**
   SST 09718–00010
7. **DISCONNECT REAR DISC BRAKE CALIPER ASSY LH (DISC REAR BRAKE TYPE) (See page 32–49)**
8. **REMOVE REAR DISC (DISC REAR BRAKE TYPE) (See page 32–49)**
9. **REMOVE PARKING BRAKE SHOE STRUT LH (DISC REAR BRAKE TYPE) (See page 33–18)**
10. **REMOVE PARKING BRAKE SHOE ADJUSTING SCREW SET (DISC REAR BRAKE TYPE) (See page 33–18)**
11. **REMOVE PARKING BRAKE SHOE ASSY LH NO.1 (DISC REAR BRAKE TYPE) (See page 33–18)**
    SST 09718–00010
12. **REMOVE PARKING BRAKE SHOE ASSY LH NO.2 (DISC REAR BRAKE TYPE) (See page 33–18)**
    SST 09718–00010
13. **REMOVE PARKING BRAKE SHOE LEVER LH (DISC REAR BRAKE TYPE) (See page 33–18)**

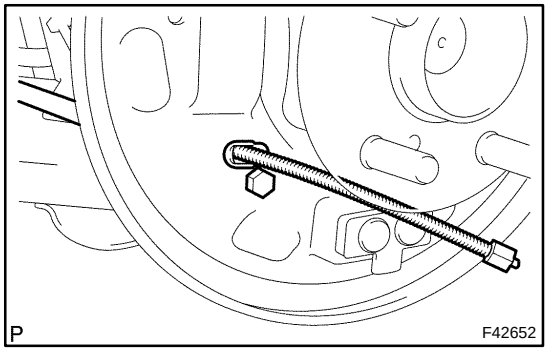

14. **DISCONNECT PARKING BRAKE CABLE ASSY NO.3**
(a) Remove the bolt, and disconnect the parking brake cable assy No.3 from the backing plate.

15. **REMOVE EXHAUST PIPE ASSY FRONT**
1ZZ–FE ENGINE TYPE: See page 15–4
2ZZ–GE ENGINE TYPE: See page 15–9
16. **REMOVE FRONT FLOOR HEAT INSULATOR NO.1 (See page 33–8)**
17. **REMOVE FRONT FLOOR HEAT INSULATOR NO.2 (See page 33–8)**
18. **REMOVE FUEL TANK PROTECTOR NO.1**

(a) Remove the 5 nuts and fuel tank protector No.1.

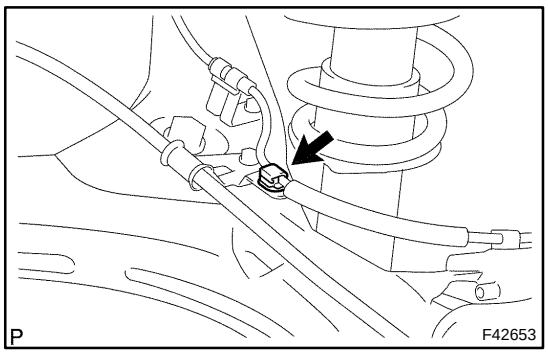

19. REMOVE PARKING BRAKE CABLE ASSY NO.3

(a) Using a clip remover, disconnect the skid control sensor wire harness clip from the clamp.

(b) Remove the 4 bolts and cable retainer from the body.

(c) Disconnect the parking brake cable assy No.3 from the equalizer, and remove the parking brake cable assy No.3.

20. INSTALL PARKING BRAKE CABLE ASSY NO.3

(a) Connect the parking brake cable assy No.3 to the equalizer.

(b) Install the parking brake cable assy No.3 with the 4 bolts and cable retainer.

Torque: 5.4 N·m (55 kgf·cm, 48 in.·lbf)

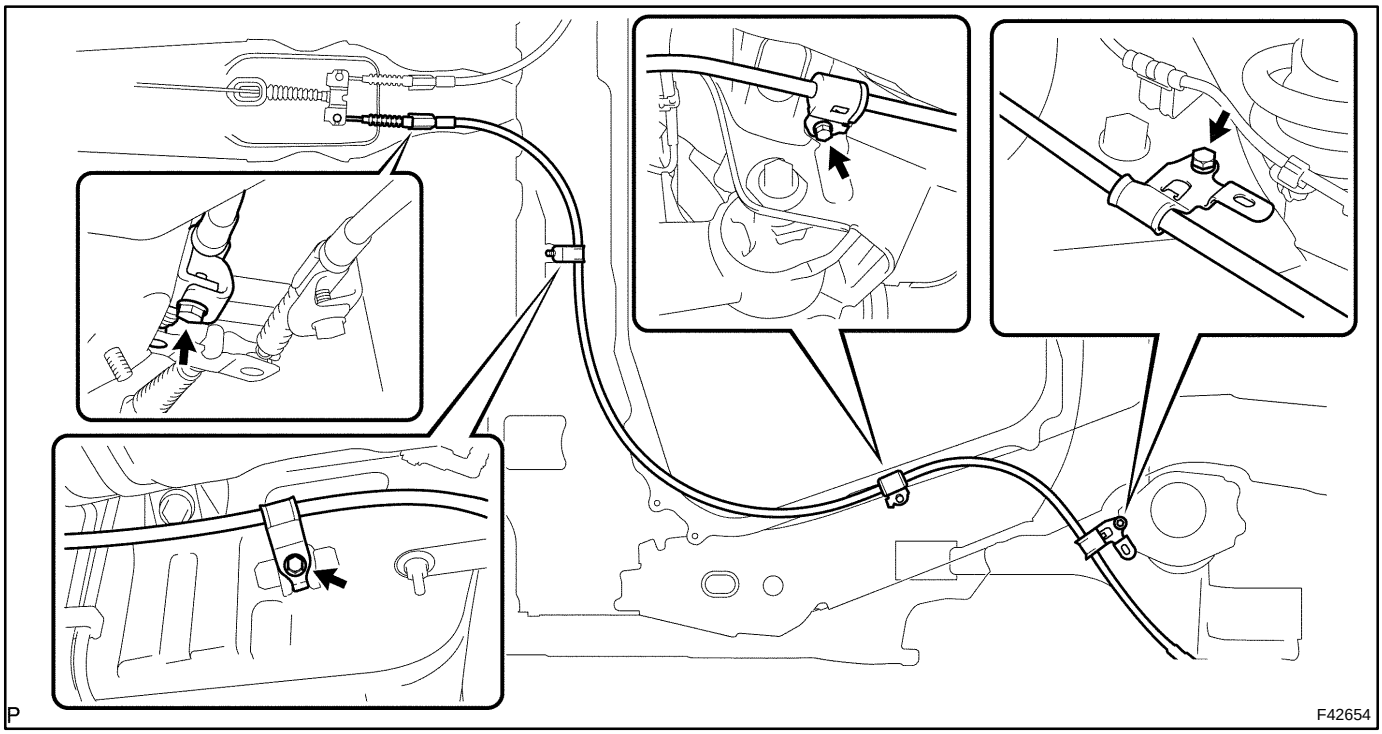

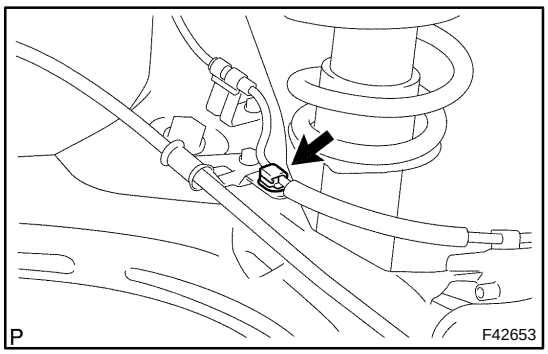

(c) Connect the skid control sensor wire harness clip to the clamp.

21. INSTALL FUEL TANK PROTECTOR NO.1

(a) Install the fuel tank protector No.1 with the 5 nuts.

Torque: 5.5 N·m (55 kgf·cm, 48 in.·lbf)

22. INSTALL FRONT FLOOR HEAT INSULATOR NO.2 (See page 33–8)

23. INSTALL FRONT FLOOR HEAT INSULATOR NO.1 (See page 33–8)

24. INSTALL EXHAUST PIPE ASSY FRONT

1ZZ–FE ENGINE TYPE: See page 15–4

2ZZ–GE ENGINE TYPE: See page 15–9

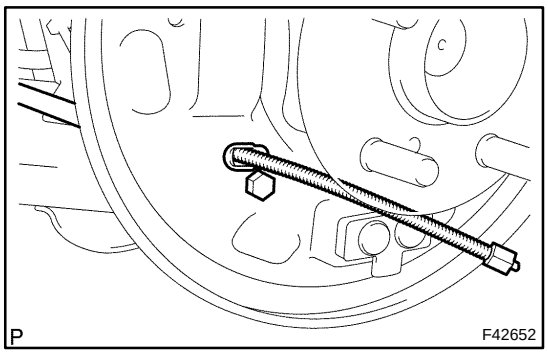

25. CONNECT PARKING BRAKE CABLE ASSY NO.3

(a) Connect the parking brake cable assy No.3 to the backing plate with the bolt.
Torque: 7.8 N·m (80 kgf·cm, 69 in.·lbf)

26. APPLICATION HIGH TEMPERATURE GREASE (DRUM REAR BRAKE TYPE) (See page 32–33)
27. INSTALL REAR BRAKE SHOE (DRUM REAR BRAKE TYPE) (See page 32–33)
SST 09718–00010
28. INSTALL REAR BRAKE AUTOMATIC ADJUST LEVER LH (DRUM REAR BRAKE TYPE) (See page 32–33)
29. INSTALL PARKING BRAKE SHOE STRUT SET LH (DRUM REAR BRAKE TYPE) (See page 32–33)
30. INSTALL FRONT BRAKE SHOE (DRUM REAR BRAKE TYPE) (See page 32–33)
SST 09718–00010, 09921–00010
31. CHECK REAR DRUM BRAKE INSTALLATION (DRUM REAR BRAKE TYPE) (See page 32–33)
32. INSTALL REAR BRAKE DRUM SUB–ASSY (DRUM REAR BRAKE TYPE) (See page 32–33)
33. ADJUST REAR DRUM BRAKE SHOE CLEARANCE (DRUM REAR BRAKE TYPE) (See page 32–33)
34. APPLICATION HIGH TEMPERATURE GREASE (DISC REAR BRAKE TYPE) (See page 33–18)
35. INSTALL PARKING BRAKE SHOE LEVER LH (DISC REAR BRAKE TYPE) (See page 33–18)
36. INSTALL PARKING BRAKE SHOE ASSY LH NO.2 (DISC REAR BRAKE TYPE) (See page 33–18)
SST 09718–00010
37. INSTALL PARKING BRAKE SHOE ASSY LH NO.1 (DISC REAR BRAKE TYPE) (See page 33–18)
SST 09718–00010
38. INSTALL PARKING BRAKE SHOE ADJUSTING SCREW SET (DISC REAR BRAKE TYPE) (See page 33–18)
39. INSTALL PARKING BRAKE SHOE STRUT LH (DISC REAR BRAKE TYPE) (See page 33–18)
40. CHECK PARKING BRAKE INSTALLATION (DISC REAR BRAKE TYPE) (See page 33–18)
41. INSTALL REAR DISC (DISC REAR BRAKE TYPE) (See page 32–49)
42. ADJUST PARKING BRAKE SHOE CLEARANCE (DISC REAR BRAKE TYPE) (See page 33–18)
43. CONNECT REAR DISC BRAKE CALIPER ASSY LH (DISC REAR BRAKE TYPE) (See page 32–49)
44. INSTALL REAR WHEEL
Torque: 103 N·m (1,050 kgf·cm, 76 ft·lbf)
45. INSPECT PARKING BRAKE LEVER TRAVEL (See page 33–2)
46. ADJUST PARKING BRAKE LEVER TRAVEL (See page 33–2)
47. CHECK EXHAUST LEAKAGE

SPEEDOMETER SENSOR (A246E)

400MX–01

REPLACEMENT

1. REMOVE AIR CLEANER CASE

2. REMOVE AIR CLEANER HOSE NO.1

3. REMOVE SPEEDOMETER SENSOR

(a) Disconnect the connector.

(b) Remove the bolt and speedometer sensor assembly.

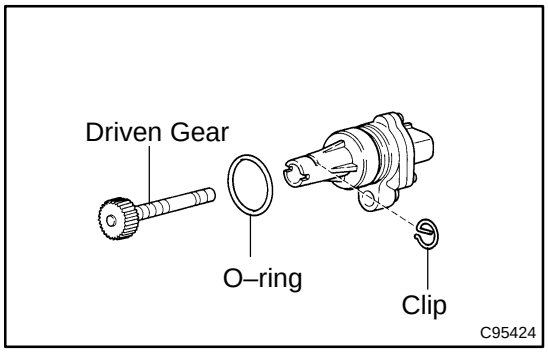

(c) Remove the clip and driven gear from the speedometer sensor.

4. INSTALL SPEEDOMETER SENSOR

(a) Coat a O–ring with ATF and install it to the speedometer sensor.

(b) Install the driven gear to the speedometer sensor with the clip.

(c) Install the speedometer sensor assembly with the bolt.
Torque: 11.3 N·m (115 kgf·cm, 9 ft·lbf)

(d) Connect the connector.

5. INSTALL AIR CLEANER HOSE NO.1

6. INSTALL AIR CLEANER CASE
Torque: 7.0 N·m (71 kgf·cm, 62 in.·lbf)

FLOOR SHIFT CABLE TRANSMISSION CONTROL SHIFT (ATM)

400NF–01

REPLACEMENT

1. PRECAUTION (See page 60–1)
2. SEPARATE BATTERY NEGATIVE TERMINAL
3. REMOVE INSTRUMENT CLUSTER FINISH PANEL SUB–ASSY CENTER (See page 71–10)
4. REMOVE INSTRUMENT CLUSTER FINISH PANEL ASSY CTR (See page 71–10)
5. REMOVE INSTRUMENT PANEL BOX (See page 71–10)
6. REMOVE INSTRUMENT PANEL FINISH PANEL LOWER CENTER (See page 71–10)
7. REMOVE AIR BAG SENSOR ASSY CENTER (See page 60–39)
8. SEPARATE OXYGEN SENSOR CONNECTOR
(a) Remove the foot rest.
(b) Pull up the floor carpet.
(c) Disconnect the oxygen sensor connector.
9. REMOVE FLOOR PANEL BRACE FRONT
(a) Remove the 2 nuts and floor panel brace.
10. REMOVE EXHAUST PIPE ASSY FRONT
(a) 1ZZ–FE: (See page 15–4)
(b) 2ZZ–GE: (See page 15–9)
11. REMOVE FRONT FLOOR HEAT INSULATOR NO.1
(a) Remove the 3 nuts and heat insulator.
12. REMOVE AIR CLEANER ASSEMBLY WITH HOSE
13. REMOVE FLOOR SHIFT CABLE TRANSMISSION CONTROL SHIFT
(a) Remove the nut and disconnect control cable from control shaft lever.

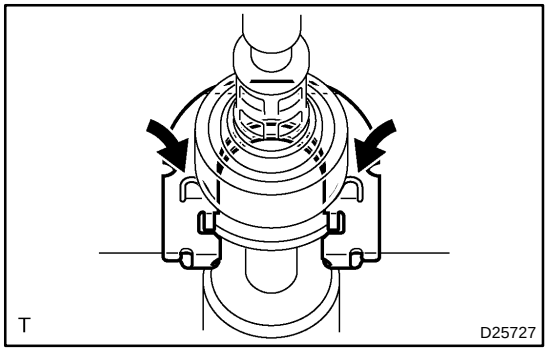

(b) 2ZZ–GE:
Push the claw of the clip and disconnect the control cable from the bracket.
(c) 2ZZ–GE:
Remove the clip from the bracket.

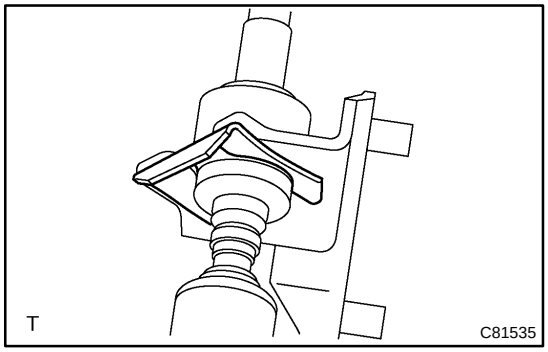

(d) 1ZZ–FE:
Remove the clip and disconnect the control cable from the bracket.

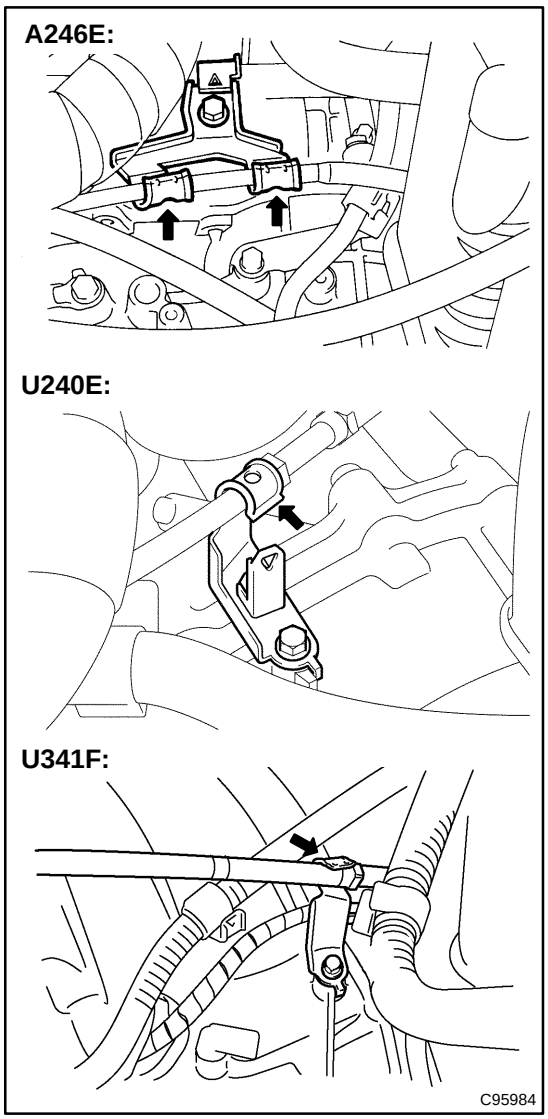

(e) Disconnect the control cable from control cable support.

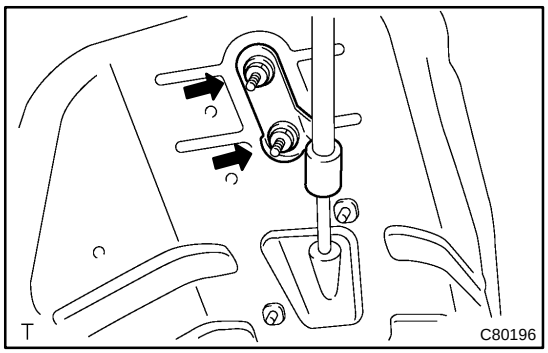

(f) Remove the 2 nuts and separate the control cable from the body.

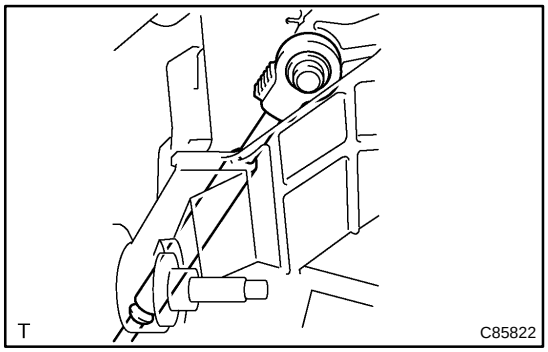

(g) Remove the cable end from the floor shift assy.

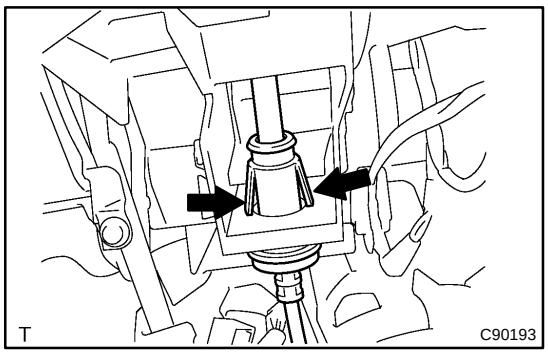

(h) Using a screw driver, disconnect the control cable from the shift lever plate.

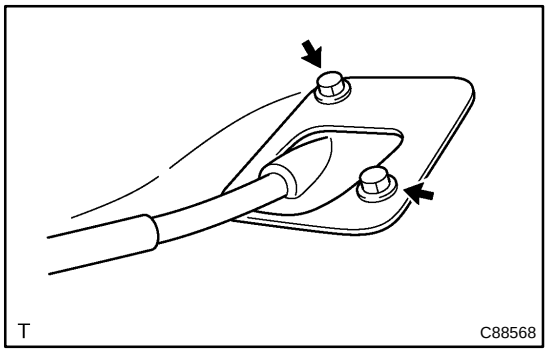

(i) Remove the 2 bolts.
(j) Pull out the control cable assy from the body.
(k) Remove the retainer from the shift cable.

14. INSTALL FLOOR SHIFT CABLE TRANSMISSION CONTROL SHIFT

(a) Install the retainer to the shift cable.
(b) Pull in the control cable assy to the body.

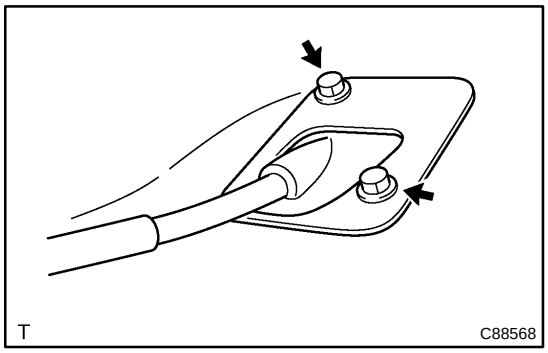

(c) Install the 2 bolts.
Torque: 5.0 N·m (50 kgf·cm, 43 in.·lbf)

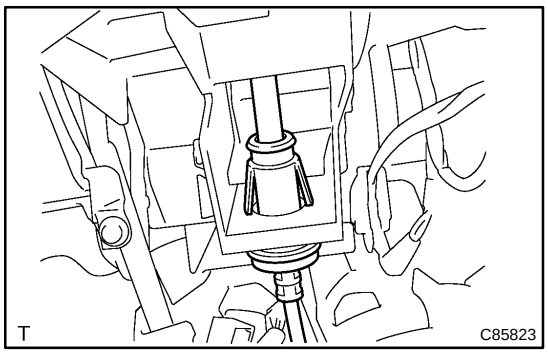

(d) Install the control cable to the shift lever plate.

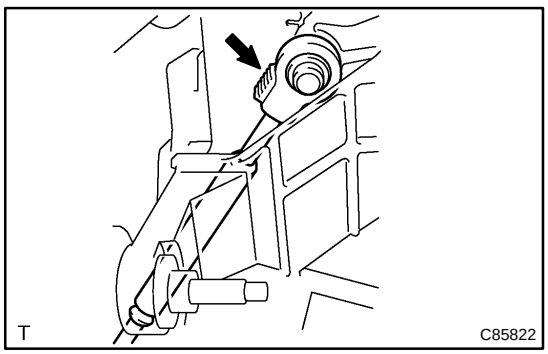

(e) Connect the control cable end to the floor shift assy.

HINT:
Install it with the uneven surface facing up.

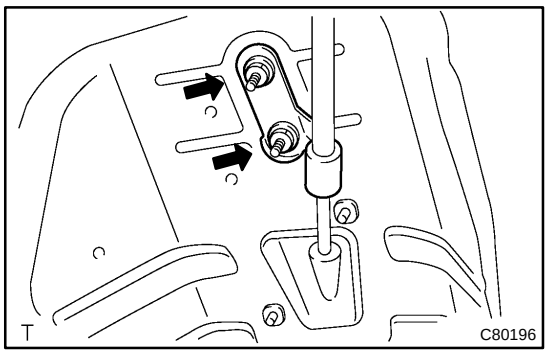

(f) Install the control cable with the 2 nuts to the body.
Torque: 12 N·m (122 kgf·cm, 9 ft·lbf)

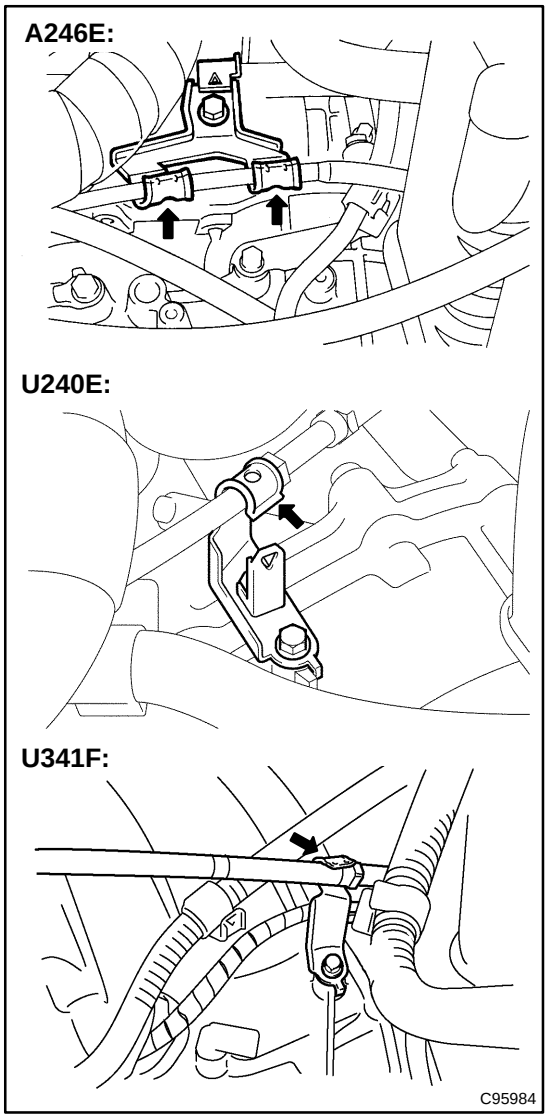

(g) Connect the control cable to the control cable support.
(h) Temporarily install the control cable to the control shaft lever with nut.

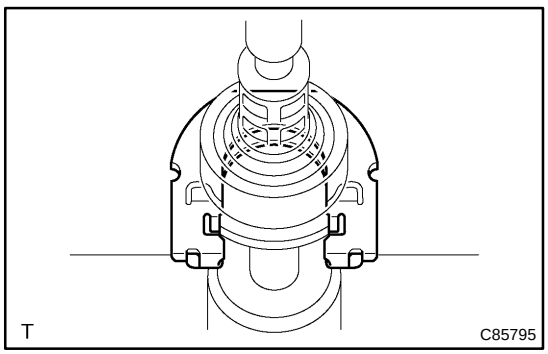

(i) 2ZZ–GE:
Install a new clip to the bracket.
(j) 2ZZ–GE:
Connect the control cable to the bracket.

NOTICE:
Insert the cable securely.

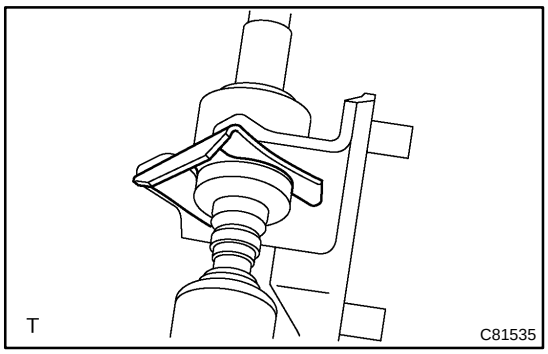

(k) 1ZZ–FE:
Install the control cable with the clip to the bracket.

NOTICE:
Insert the cable securely.

15. INSTALL AIR CLEANER ASSEMBLY WITH HOSE
Torque: 7.0 N·m (71 kgf·cm, 62 in.·lbf)
16. INSTALL FRONT FLOOR HEAT INSULATOR NO.1
(a) Install the heat insulator with the 3 nuts.
Torque: 5.0 N·m (50 kgf·cm, 44 in.·lbf)
17. INSTALL EXHAUST PIPE ASSY FRONT
(a) 1ZZ–FE: (See page 15–4)
(b) 2ZZ–GE: (See page 15–9)
18. INSTALL FLOOR PANEL BRACE FRONT
(a) Install the floor panel brace with the 2 nuts .
Torque: 29.6 N·m (302 kgf·cm, 22 ft·lbf)
19. INSTALL OXYGEN SENSOR CONNECTOR
(a) Connect the oxygen sensor connector.
(b) Install the floor carpet and foot rest.
20. INSTALL AIR BAG SENSOR ASSY CENTER (See page 60–39)
SST 09249–63010
21. ADJUST SHIFT LEVER POSITION (See page 40–87)
22. INSPECT SHIFT LEVER POSITION (See page 40–87)
23. INSPECT SRS WARNING LIGHT (See page 60–8)

SHIFT LOCK CONTROL ECU (ATM)

400ND–01

INSPECTION

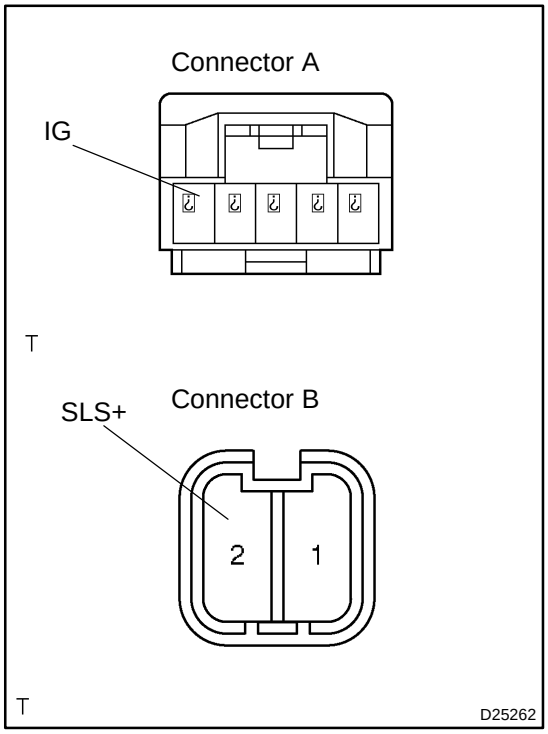

1. INSPECT SHIFT LOCK CONTROL ECU

(a) Disconnect the connector of shift lock control ECU.

(b) Using an ohmmeter, measure the resistance between terminals.

Terminal	Measuring Condition	Specified Value
A5(IG) – B2(SLS+)	Switch ON	Continuity
A5(IG) – B2(SLS+)	Switch OFF	NO Continuity

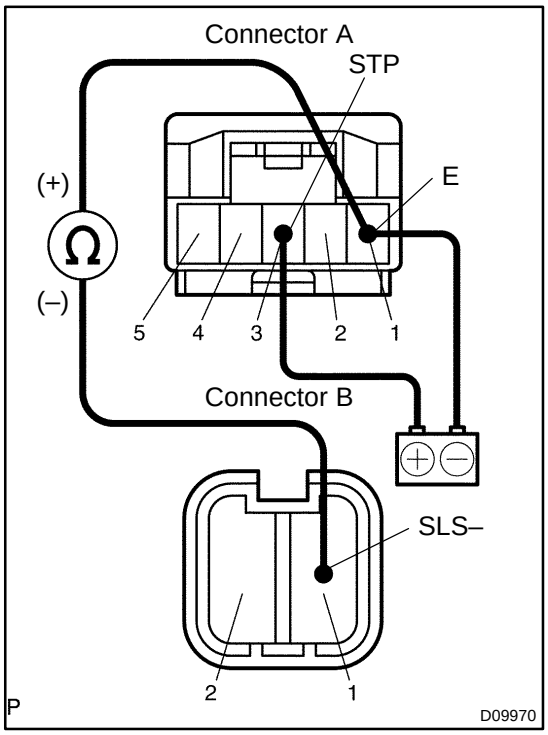

(c) Connect STP terminal to the batteries' positive (+) terminal, and E terminal to the battery negative (–) terminal, and apply about 12 V between STP – E terminals.

(d) Using an ohmmeter, measure the resistance between terminals.

Terminal	Measuring Condition	Specified Value
A1 (E) – B1 (SLS–)	Connect Battery	Continuity
A1 (E) – B1 (SLS–)	Disconnect Battery	NO Continuity

AUTOMATIC TRANSAXLE ASSY (U240E)

COMPONENTS

400MS–01

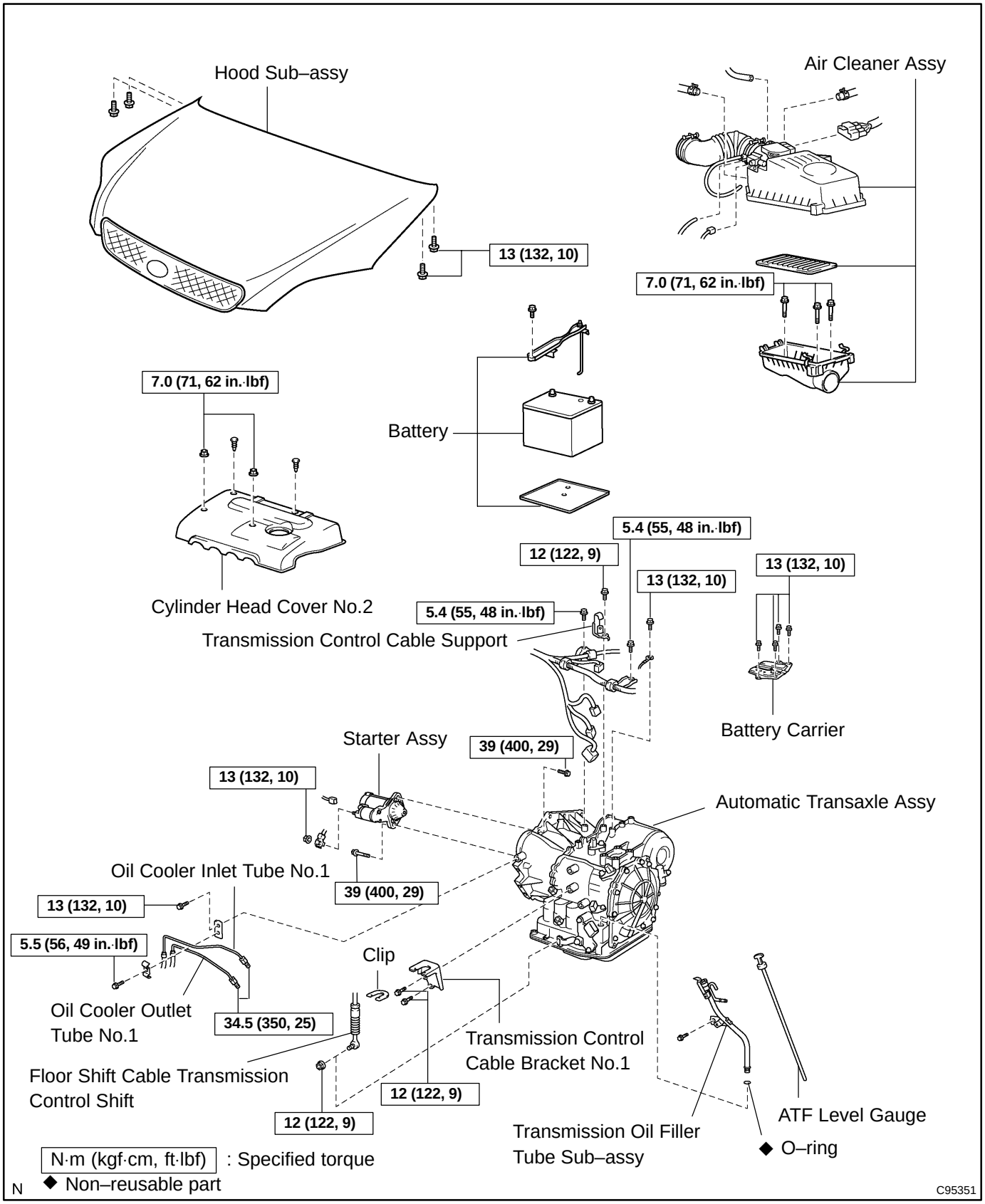

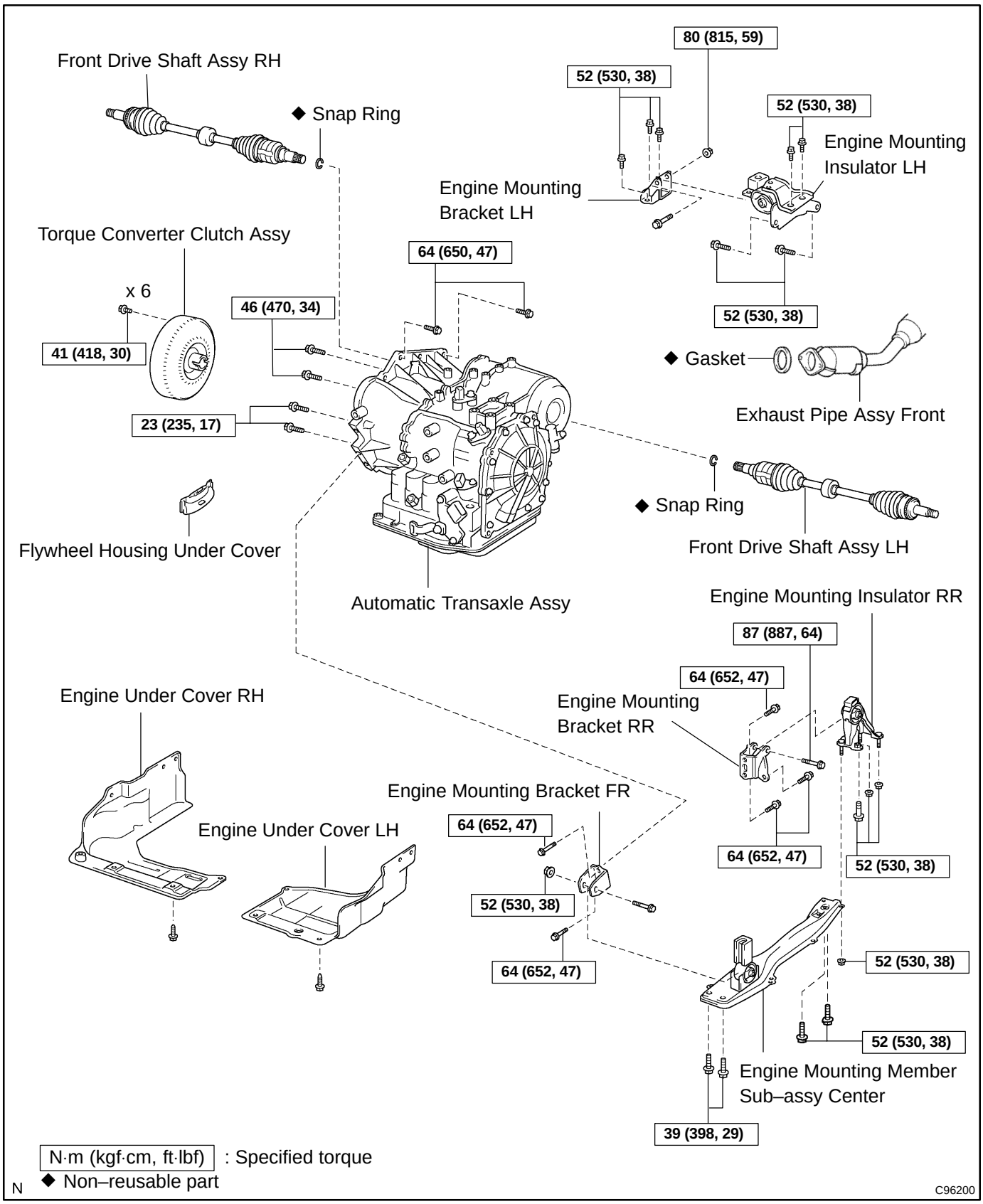
Front Drive Shaft Assy RH
◆ Snap Ring
80 (815, 59)
52 (530, 38)
52 (530, 38)
Engine Mounting Insulator LH
Engine Mounting Bracket LH
52 (530, 38)
Torque Converter Clutch Assy
x 6
41 (418, 30)
64 (650, 47)
46 (470, 34)
23 (235, 17)
◆ Gasket
Exhaust Pipe Assy Front
Flywheel Housing Under Cover
Automatic Transaxle Assy
◆ Snap Ring
Front Drive Shaft Assy LH
Engine Mounting Insulator RR
87 (887, 64)
64 (652, 47)
Engine Mounting Bracket RR
Engine Under Cover RH
Engine Mounting Bracket FR
64 (652, 47)
Engine Under Cover LH
64 (652, 47)
52 (530, 38)
52 (530, 38)
64 (652, 47)
52 (530, 38)
52 (530, 38)
Engine Mounting Member Sub–assy Center
39 (398, 29)
N·m (kgf·cm, ft·lbf) : Specified torque
◆ Non–reusable part
N
C96200

REPLACEMENT

1. REMOVE HOOD SUB–ASSY

2. REMOVE CYLINDER HEAD COVER NO.2

3. REMOVE BATTERY

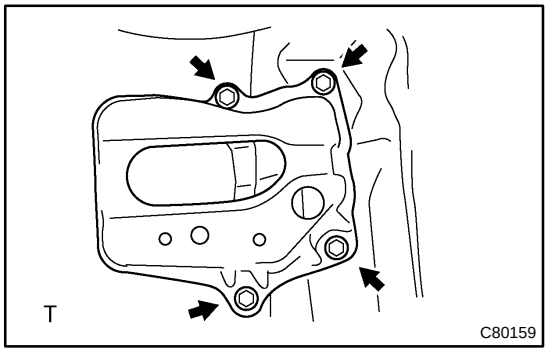

4. REMOVE BATTERY CARRIER

(a) Remove the 4 bolts and battery carrier.

5. REMOVE AIR CLEANER ASSEMBLY WITH HOSE

6. DISCONNECT FLOOR SHIFT CABLE TRANSMISSION CONTROL SHIFT

(a) Remove the nut from the control shaft lever.

(b) Disconnect the control cable from the control shaft lever.

(c) Push the claw of the clip and disconnect the control cable from the bracket.

(d) Remove the clip from the bracket.

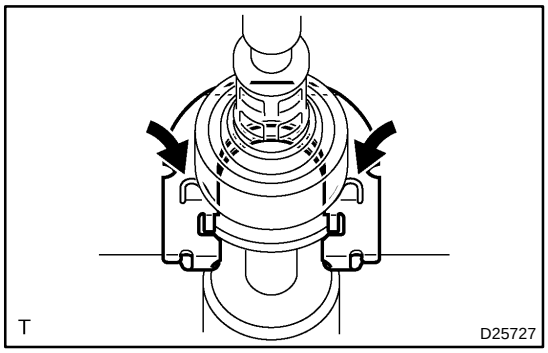

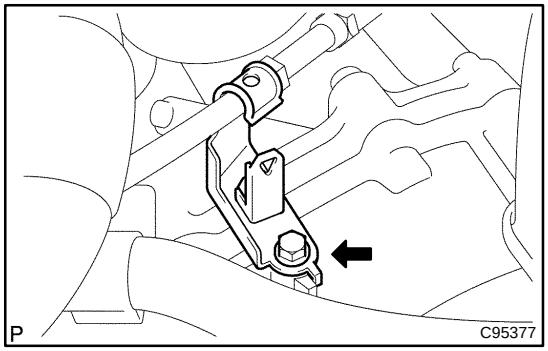

7. REMOVE TRANSMISSION CONTROL CABLE SUPPORT

(a) Disconnect the control cable from the control cable support.

(b) Remove the bolt and control cable support.

8. REMOVE TRANSMISSION CONTROL CABLE BRACKET NO.1

(a) Remove the 2 bolts and control cable bracket.

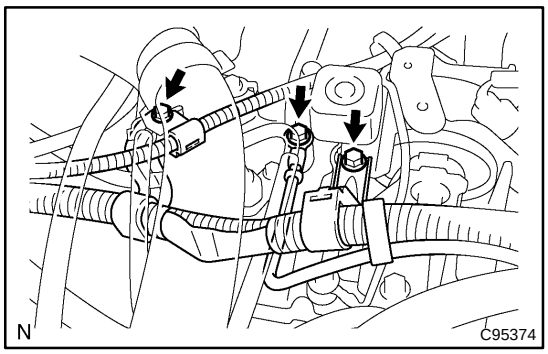

9. DISCONNECT WIRE HARNESS

(a) Remove the bolt and disconnect the wire harness.
(b) Remove the 2 bolts and disconnect the 2 wire harness clamp brackets.

10. DISCONNECT CONNECTOR

(a) Disconnect the transmission wire connector.
(b) Disconnect the park/neutral position switch connector.
(c) Disconnect the 2 transmission revolution sensor connectors.

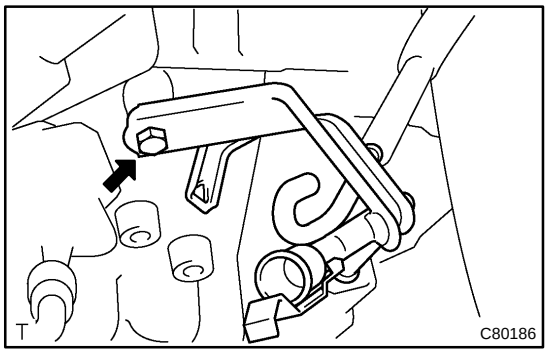

11. REMOVE TRANSMISSION OIL FILLER TUBE SUB–ASSY

(a) Remove the ATF lever gauge.
(b) Remove the bolt and oil filler tube.
(c) Remove the O–ring from the oil filler tube.

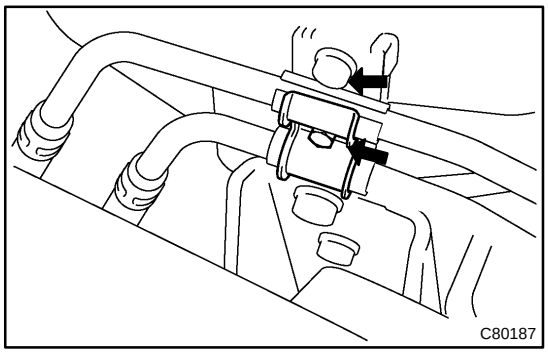

12. REMOVE OIL COOLER INLET TUBE NO.1

(a) Remove the 2 bolts and oil tube clamp.

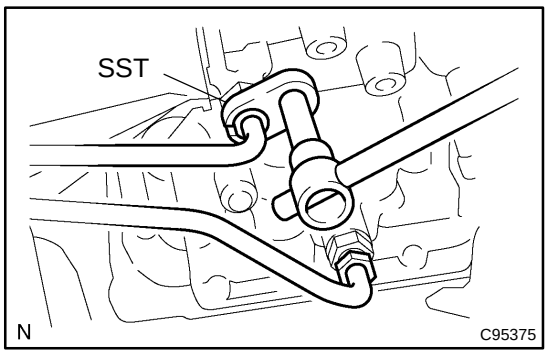

(b) Using SST, disconnect the oil cooler inlet tube No. 1.
SST 09023–12700

13. REMOVE OIL COOLER OUTLET TUBE NO.1

(a) Using SST, disconnect the oil cooler outlet tube No. 1.
SST 09023–12700

14. DISCONNECT OXYGEN SENSOR CONNECTOR

(a) Remove the foot rest.
(b) Pull up the floor carpet.
(c) Disconnect the oxygen sensor connector.

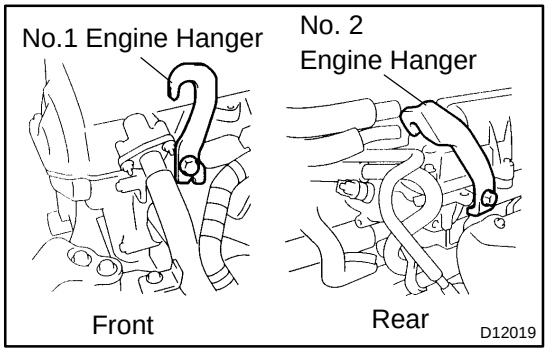

15. SUSPEND ENGINE ASSY

(a) Disconnect the 2 PCV hoses.
(b) Install the No.1 and No.2 engine hangers in the correct direction.
Parts No.:
No.1 engine hanger: 12281–88600
No.2 engine hanger: 12282–88600
Bolt: 91512–61020
Torque: 38 N·m (387 kgf·cm, 28 ft·lbf)
(c) Attach the engine chain hoist to the engine hangers.

CAUTION:
Do not attempt to hang the engine by hooking the chain to any other parts.

16. REMOVE FRONT WHEELS
17. REMOVE ENGINE UNDER COVER RH
18. REMOVE ENGINE UNDER COVER LH
19. DRAIN AUTOMATIC TRANSAXLE FLUID

(a) Remove the drain plug and gasket, and drain ATF.
(b) Install a new gasket and drain plug.
Torque: 49 N·m (500 kgf·cm, 36 ft·lbf)

20. REMOVE FLOOR PANEL BRACE FRONT (See page 15–9)
21. REMOVE EXHAUST PIPE ASSY FRONT (See page 15–9)
22. REMOVE FRONT DRIVE SHAFT ASSY RH (See page 30–32)
SST 09520–01010, 09520–24010 (09520–32040)
23. REMOVE FRONT DRIVE SHAFT ASSY LH (See page 30–32)
SST 09520–01010, 09520–24010 (09520–32040)
24. REMOVE STARTER ASSY

(a) Remove the nut and disconnect the starter wire.
(b) Disconnect the connector.
(c) Remove the 2 bolts and starter.

25. SUPPORT AUTOMATIC TRANSAXLE ASSY

(a) Support the automatic transaxle with a transmission jack.

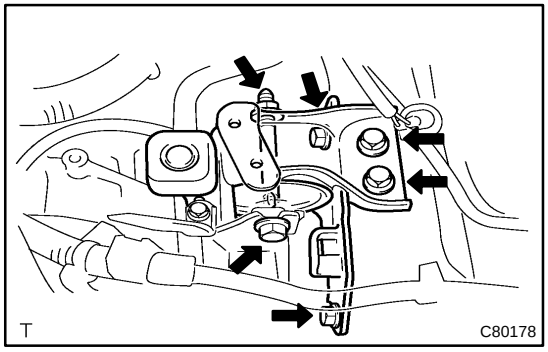

26. REMOVE TRANSVERSE ENGINE ENGINE MOUNTING INSULATOR

(a) Remove the 5 bolts, nut and engine mounting insulator LH.

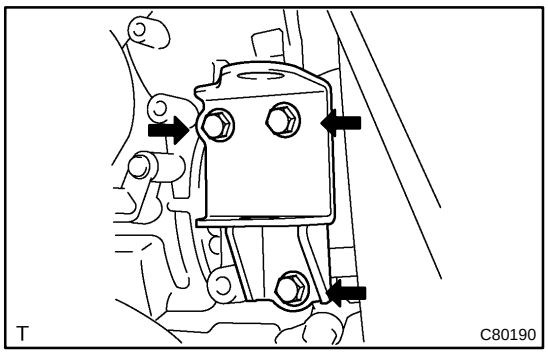

27. REMOVE TRANSVERSE ENGINE ENGINE MOUNTING BRACKET

(a) Remove the 3 bolts and engine mounting bracket LH.

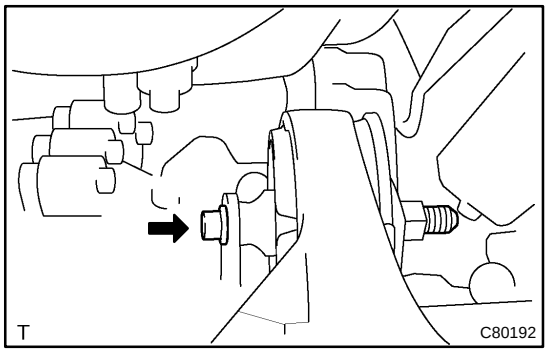

28. REMOVE TRANSVERSE ENGINE ENGINE MOUNTING INSULATOR

(a) Remove the bolt from the engine mounting bracket RR.

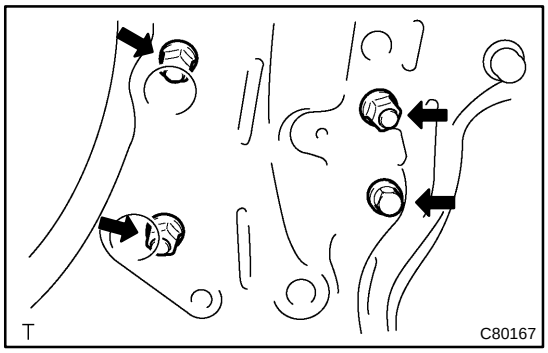

(b) Remove the 3 nuts, bolt and engine mounting insulator RR from the suspension member.

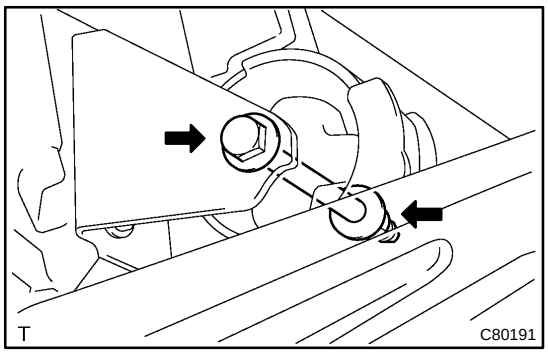

29. SEPARATE TRANSVERSE ENGINE ENGINE MOUNTING INSULATOR

(a) Remove the bolt and nut from the engine mounting bracket FR.

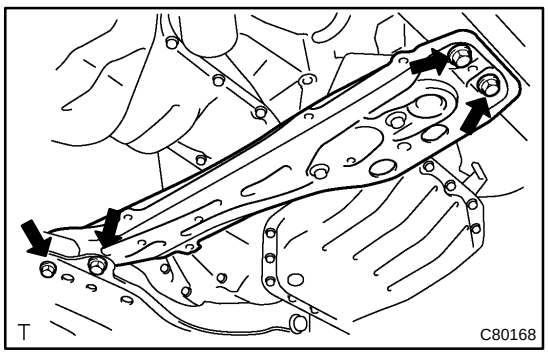

30. REMOVE ENGINE MOUNTING MEMBER SUB–ASSY CENTER

(a) Remove the 4 bolts and member sub–assy center with engine mounting insulator FR.

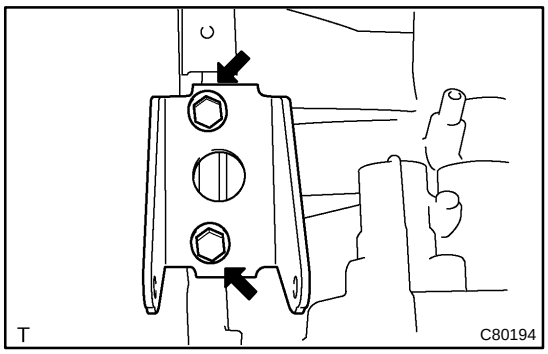

31. REMOVE TRANSVERSE ENGINE ENGINE MOUNTING BRACKET

(a) Remove the 2 bolts and engine mounting bracket FR.

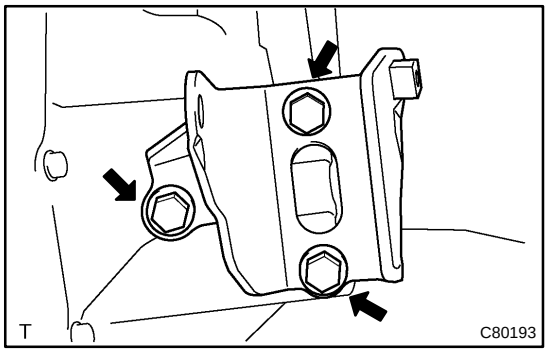

32. REMOVE TRANSVERSE ENGINE ENGINE MOUNTING BRACKET

(a) Remove the 3 bolts and engine mounting bracket RR.

33. REMOVE FLYWHEEL HOUSING UNDER COVER

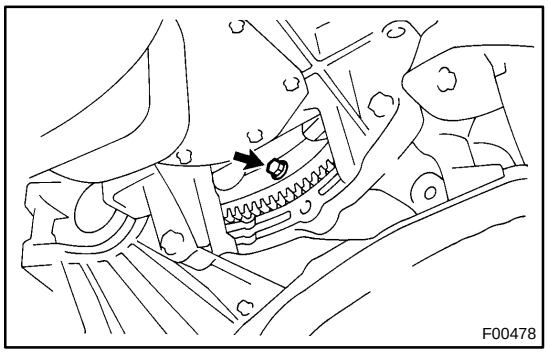

34. REMOVE AUTOMATIC TRANSAXLE ASSY

(a) Turn the crankshaft to gain access and remove the 6 bolts while holding the crankshaft pulley bolt with a wrench.

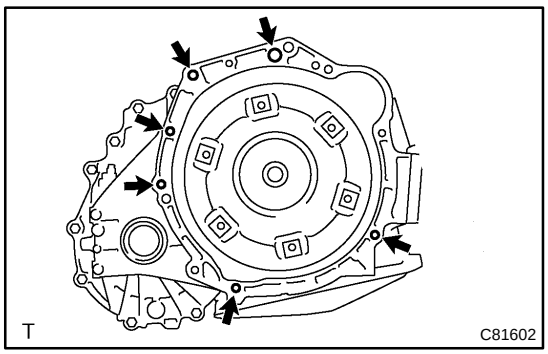

(b) Remove the 6 bolts.

(c) Separate and remove the automatic transaxle.

35. REMOVE TORQUE CONVERTER CLUTCH ASSY

36. INSPECT TORQUE CONVERTER CLUTCH ASSY (See page 40–43)

SST 09350–32014 (09351–32010, 09351–32020)

37. INSTALL TORQUE CONVERTER CLUTCH ASSY

(a) Install the torque converter clutch to the automatic transaxle.

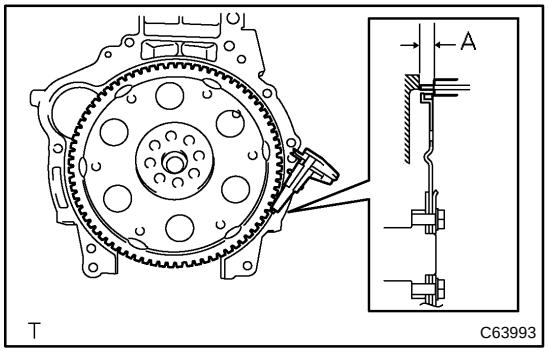

(b) Using vernier calipers, measure the dimension ”A” between the transaxle fitting part and the converter fitting part of the drive plate.

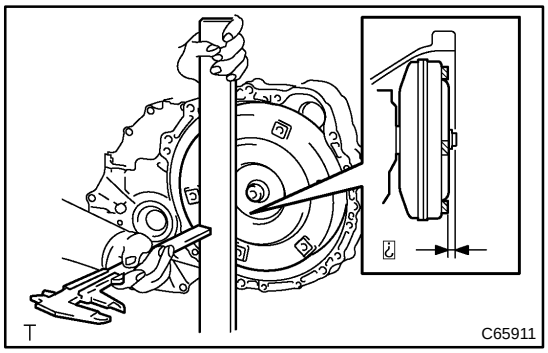

(c) Using vernier calipers and a straight edge, measure the dimension ”B” shown in the illustration and check that ”B” is greater than ”A” measured in (b).

Standard: A + 1 mm or more

NOTICE:

Do not add the thickness of straight edge.

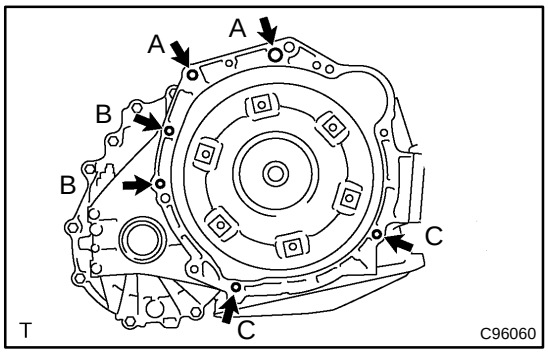

38. INSTALL AUTOMATIC TRANSAXLE ASSY

(a) Install the automatic transaxle and 6 bolts to the engine.

Torque:

Bolt A: 64 N·m (650 kgf·cm, 47 ft·lbf)

Bolt B: 46 N·m (470 kgf·cm, 34 ft·lbf)

Bolt C: 23 N·m (235 kgf·cm, 17 ft·lbf)

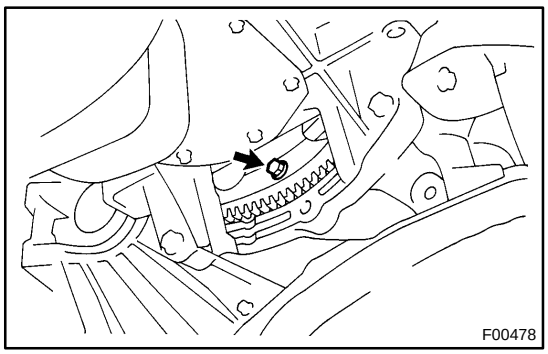

(b) Install the 6 torque converter mounting bolts.

Torque: 41 N·m (418 kgf·cm, 30 ft·lbf)

HINT:

First install yellowish green colored bolt and then the 5 bolts.

39. INSTALL FLYWHEEL HOUSING UNDER COVER

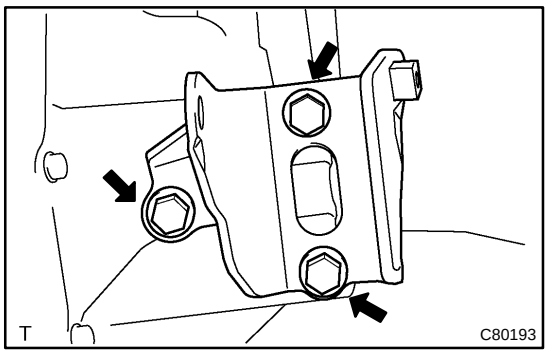

40. INSTALL TRANSVERSE ENGINE ENGINE MOUNTING BRACKET

(a) Install the engine mounting bracket RR and 3 bolts to the automatic transaxle.
Torque: 64 N·m (652 kgf·cm, 47 ft·lbf)

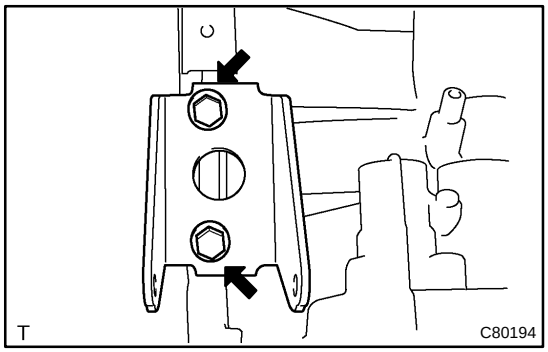

41. INSTALL TRANSVERSE ENGINE ENGINE MOUNTING BRACKET

(a) Install the engine mounting bracket FR and 2 bolts to the automatic transaxle.
Torque: 64 N·m (652 kgf·cm, 47 ft·lbf)

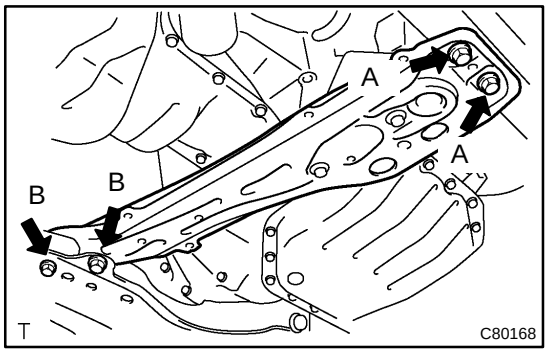

42. INSTALL ENGINE MOUNTING MEMBER SUB–ASSY CENTER

(a) Install the member sub–assy center with engine mounting insulator FR and 4 bolts.
Torque:
Bolt A: 39 N·m (398 kgf·cm, 29 ft·lbf)
Bolt B: 52 N·m (530 kgf·cm, 38 ft·lbf)

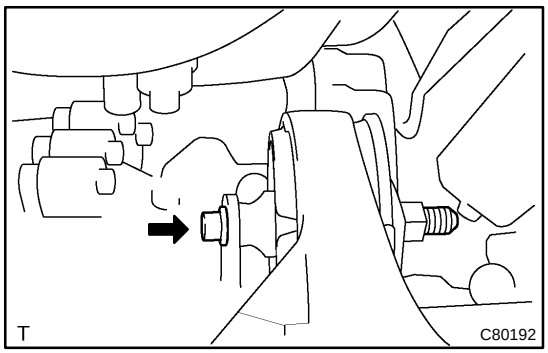

43. INSTALL TRANSVERSE ENGINE ENGINE MOUNTING INSULATOR

(a) Install the engine mounting insulator RR and bolt to the engine mounting bracket RR.
Torque: 87 N·m (887 kgf·cm, 64 ft·lbf)

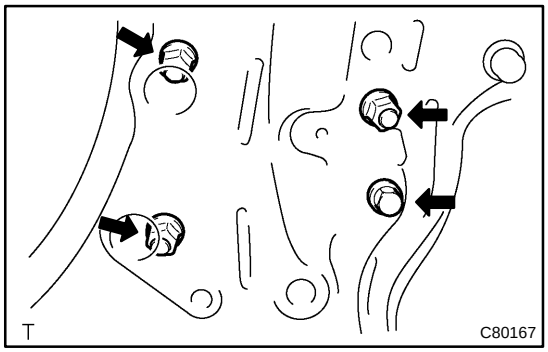

(b) Tighten the 3 nuts and bolt.
Torque: 52 N·m (530 kgf·cm, 38 ft·lbf)

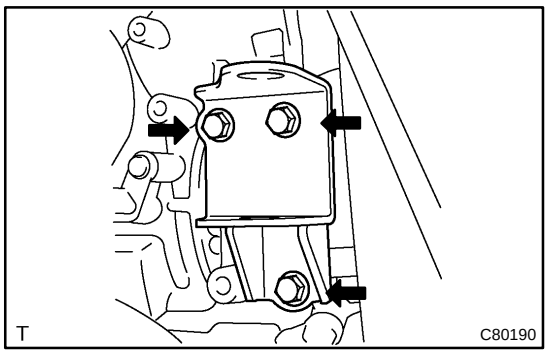

44. INSTALL TRANSVERSE ENGINE ENGINE MOUNTING BRACKET

(a) Install the engine mounting bracket LH and 3 bolts to the automatic transaxle.
Torque: 52 N·m (530 kgf·cm, 38 ft·lbf)

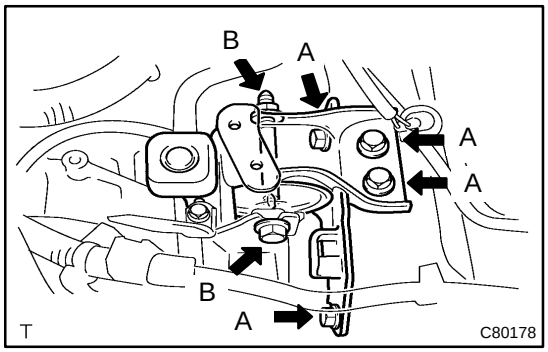

45. INSTALL TRANSVERSE ENGINE ENGINE MOUNTING INSULATOR

(a) Install the engine mounting insulator LH, 5 bolts and nut.
Torque:
Bolt A: 52 N·m (530 kgf·cm, 38 ft·lbf)
Bolt B: 80 N·m (815 kgf·cm, 59 ft·lbf)
Nut B: 80 N·m (815 kgf·cm, 59 ft·lbf)

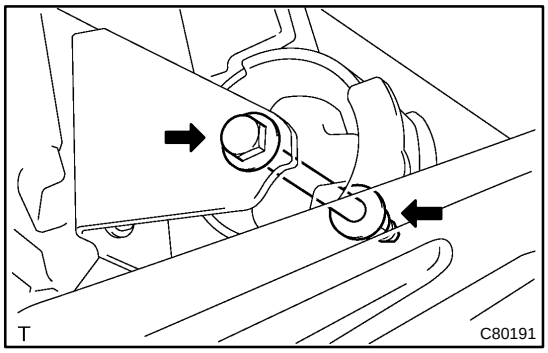

46. INSTALL TRANSVERSE ENGINE ENGINE MOUNTING INSULATOR

(a) Install the bolt and nut to the engine mounting bracket FR.
Torque: 52 N·m (530 kgf·cm, 38 ft·lbf)

47. INSTALL STARTER ASSY

(a) Install the starter and 2 bolts.
Torque: 39 N·m (400 kgf·cm, 29 ft·lbf)

(b) Connect the connecter.

(c) Install the starter wire and nut.
Torque: 13 N·m (132 kgf·cm, 10 ft·lbf)

48. INSTALL FRONT DRIVE SHAFT ASSY LH (See page 30–32)

49. INSTALL FRONT DRIVE SHAFT ASSY RH (See page 30–32)

50. INSTALL EXHAUST PIPE ASSY FRONT (See page 15–9)

51. INSTALL ENGINE UNDER COVER LH

52. INSTALL ENGINE UNDER COVER RH

53. INSTALL FRONT WHEELS
Torque: 103 N·m (1,050 kgf·cm, 76 ft·lbf)

54. INSTALL OXYGEN SENSOR CONNECTOR

(a) Connect the oxygen sensor connector.

(b) Install the floor carpet and foot rest.

55. INSTALL TRANSMISSION OIL FILLER TUBE SUB–ASSY

(a) Coat a new O–ring with ATF, and install them to the oil filler tube.

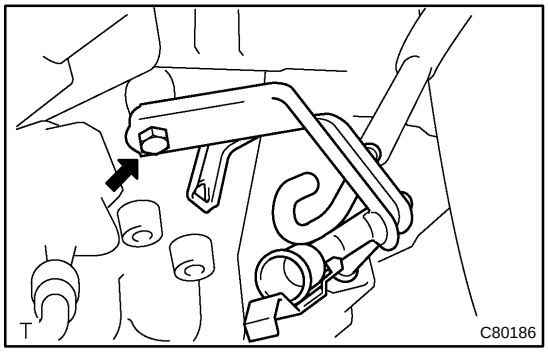

(b) Install the oil filler tube and bolt to the automatic transaxle.
Torque: 5.5 N·m (56 kgf·cm, 49 in.·lbf)

(c) Install the ATF lever gauge.

56. INSTALL OIL COOLER OUTLET TUBE NO.1

(a) Temporarily install the oil cooler outlet tube No. 1.

(b) Temporarily install the oil cooler inlet tube No. 1.

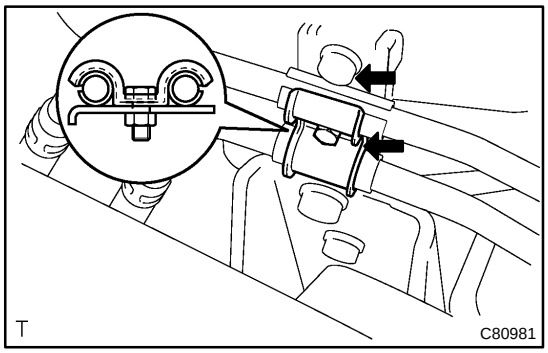

(c) Install the oil cooler tube clamp and 2 bolts.
Torque: 5.5 N·m (56 kgf·cm, 49 in.·lbf)

(d) Using SST, tighten the oil cooler outlet tube No. 1.
SST 09023–12700
Torque: 34.5 N·m (350 kgf·cm, 25 ft·lbf)

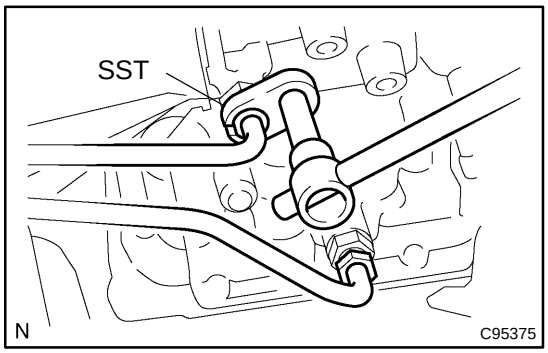

57. INSTALL OIL COOLER INLET TUBE NO.1

(a) Using SST, tighten the oil cooler inlet tube No. 1.
SST 09023–12700
Torque: 34.5 N·m (350 kgf·cm, 25 ft·lbf)

58. CONNECT CONNECTOR

(a) Connect the transmission wire connector.

(b) Connect the park/neutral position switch connector.

(c) Connect the 2 transmission revolution sensor connector.

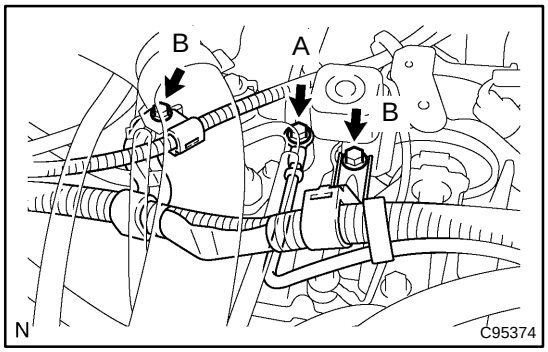

59. INSTALL WIRE HARNESS

(a) Install the wire harness with the bolt.
Torque:
Bolt A: 13 N·m (132 kgf·cm, 10 ft·lbf)

(b) Install the 2 wire harness clamp brackets with the 2 bolts.
Torque:
Bolt B: 5.4 N·m (55 kgf·cm, 48 in.·lbf)

60. INSTALL TRANSMISSION CONTROL CABLE BRACKET NO.1

(a) Install the control cable bracket and 2 bolts.
Torque: 12 N·m (122 kgf·cm, 9 ft·lbf)

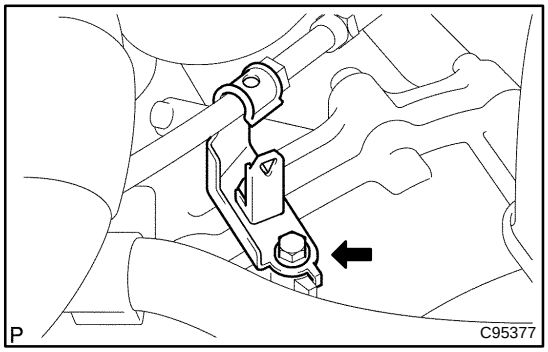

61. INSTALL TRANSMISSION CONTROL CABLE SUPPORT

(a) Install the control cable support and bolt.
Torque: 12 N·m (122 kgf·cm, 9 ft·lbf)

(b) Connect the control cable and wire harness to the control cable support.

62. INSTALL FLOOR SHIFT CABLE TRANSMISSION CONTROL SHIFT

(a) Temporarily install the control cable to the control shaft lever with the nut.

(b) Install a new clip to the bracket.

(c) Connect the control cable to the bracket.

NOTICE:
Insert the cable securely.

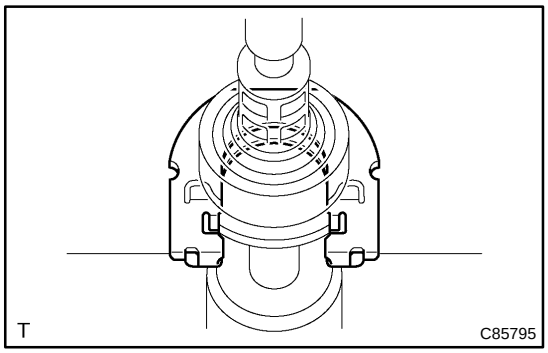

63. INSTALL BATTERY CARRIER

(a) Install the battery carrier and 4 bolts.
Torque: 13 N·m (132 kgf·cm, 10 ft·lbf)

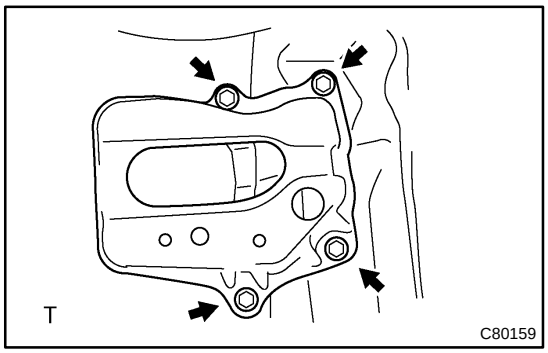

64. INSTALL AIR CLEANER ASSEMBLY WITH HOSE
Torque: 7.0 N·m (71 kgf·cm, 62 in.·lbf)

65. INSTALL CYLINDER HEAD COVER NO.2
Torque: 7.0 N·m (71 kgf·cm, 62 in.·lbf)

66. INSTALL HOOD SUB–ASSY
Torque: 13 N·m (130 kgf·cm, 10 ft·lbf)

67. INSPECT HOOD SUB–ASSY (See page 75–1)

68. ADJUST HOOD SUB–ASSY (See page 75–1)

69. ADD AUTOMATIC TRANSAXLE FLUID

70. INSPECT AUTOMATIC TRANSAXLE FLUID (See page 40–2)

71. ADJUST SHIFT LEVER POSITION (See page 40–87)

72. INSPECT SHIFT LEVER POSITION (See page 40–87)

73. INSPECT FRONT WHEEL ARIMENT (See page 26–6)

74. CHECK ABS SPEED SENSOR SIGNAL (See page 05–316)

AUTOMATIC TRANSAXLE ASSY (A246E)

400MQ–01

COMPONENTS

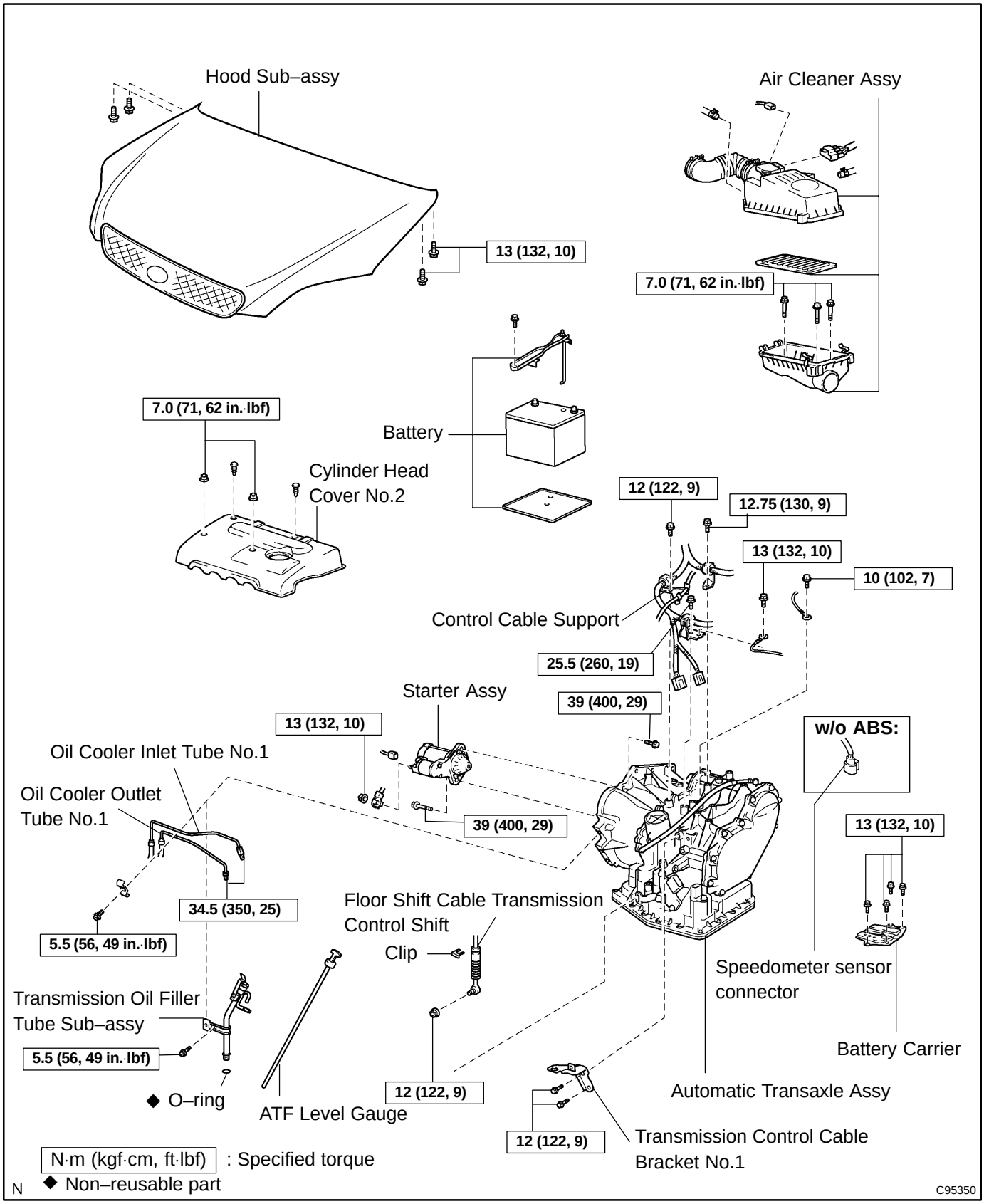

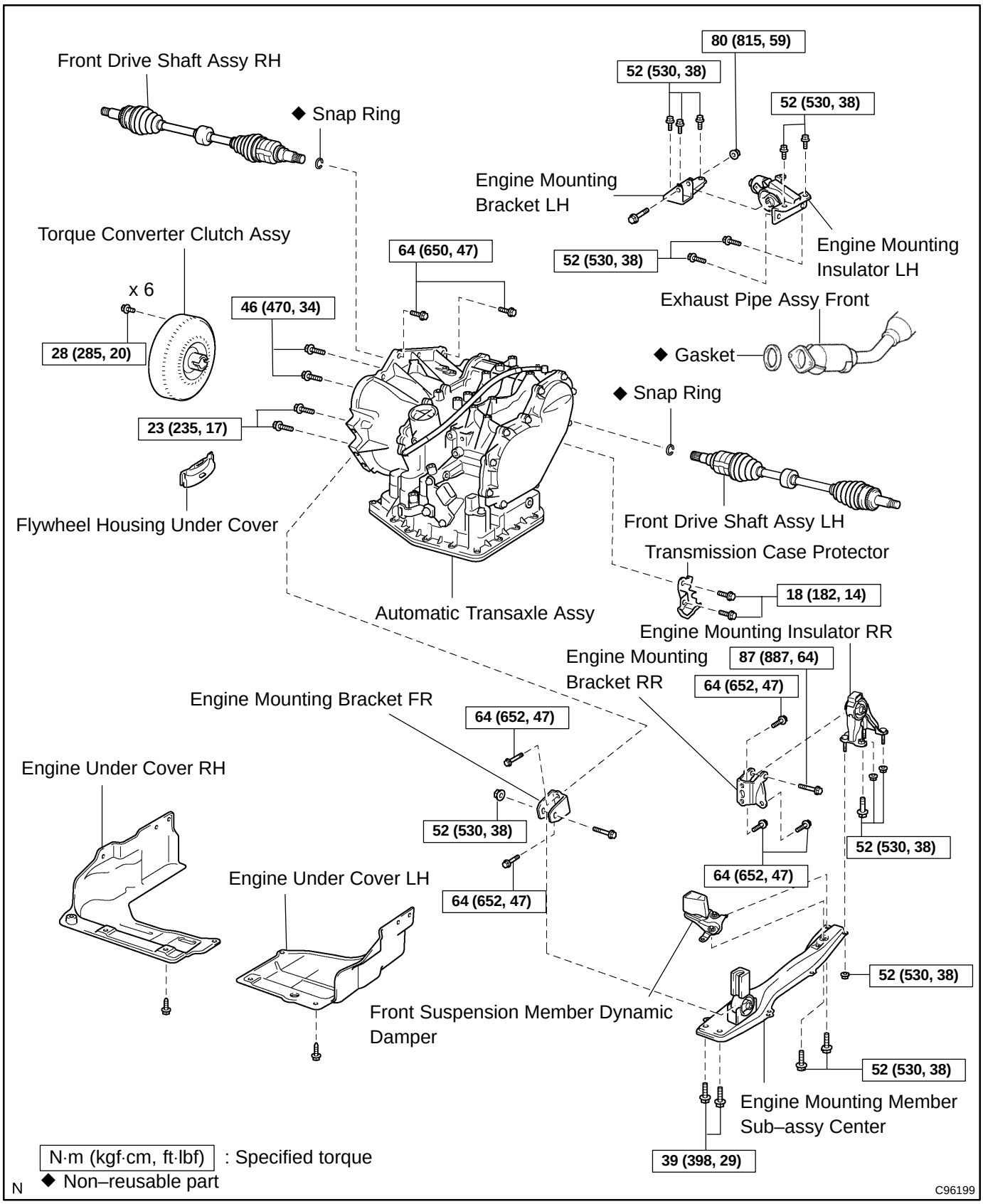

Author : Date : 1981

400MR–01

REPLACEMENT

1. REMOVE HOOD SUB–ASSY

2. REMOVE CYLINDER HEAD COVER NO.2

3. REMOVE BATTERY

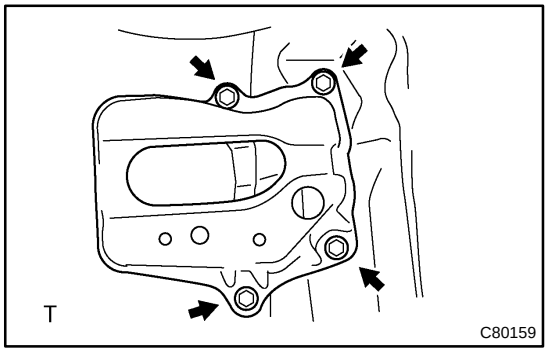

4. REMOVE BATTERY CARRIER

(a) Remove the 4 bolts and battery carrier.

5. REMOVE AIR CLEANER ASSEMBLY WITH HOSE

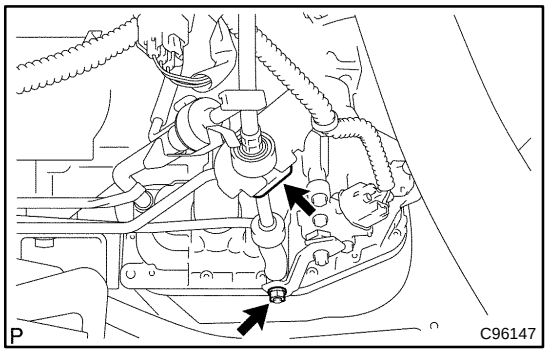

6. REMOVE FLOOR SHIFT CABLE TRANSMISSION CONTROL SHIFT

(a) Remove the nut from the control shaft lever.

(b) Disconnect the control cable from the control shaft lever.

(c) Remove the clip and disconnect the control cable from the control cable bracket.

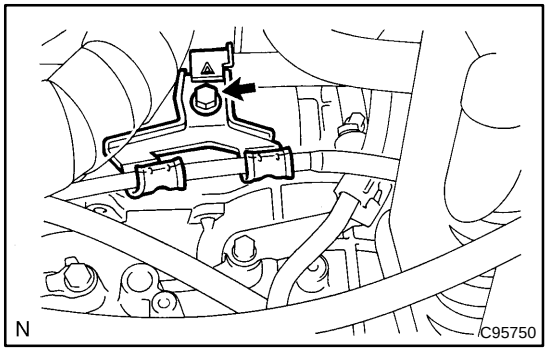

7. REMOVE TRANSMISSION CONTROL CABLE SUPPORT

(a) Disconnect the wire harness clamp and control cable from the control cable support.

(b) Remove the bolt and control cable support.

8. REMOVE TRANSMISSION CONTROL CABLE BRACKET NO.1

(a) Remove the 2 bolts and control cable bracket.

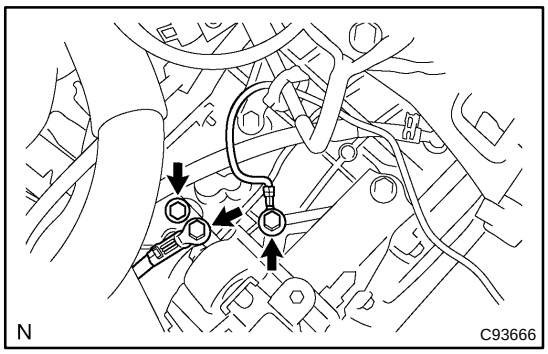

9. DISCONNECT WIRE HARNESS

(a) Remove the 2 bolts and disconnect the 2 wire harnesses.

(b) Remove the bolt and disconnect the wire harness clamp bracket.

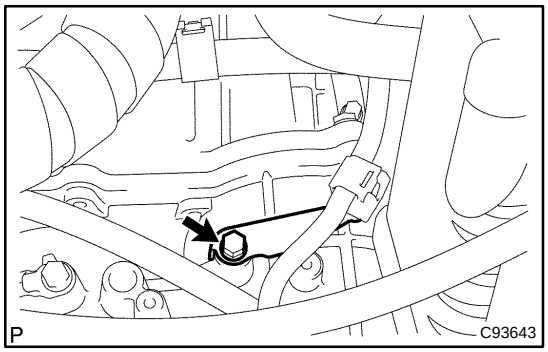

(c) Remove the bolt and disconnect the wire harness clamp bracket.

10. DISCONNECT CONNECTOR

(a) Disconnect the transmission wire connector.

(b) Disconnect the park/neutral position switch connector.

(c) w/o ABS:
Disconnect the speedometer sensor connector.

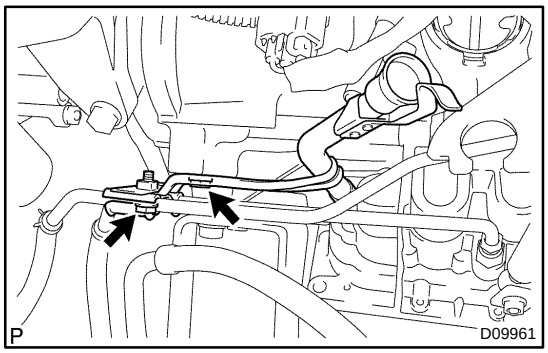

11. REMOVE TRANSMISSION OIL FILLER TUBE SUB–ASSY

(a) Remove the ATF lever gauge.

(b) Remove the 2 bolts, oil cooler tube clamp and oil filler tube.

(c) Remove the O–ring from the oil filler tube.

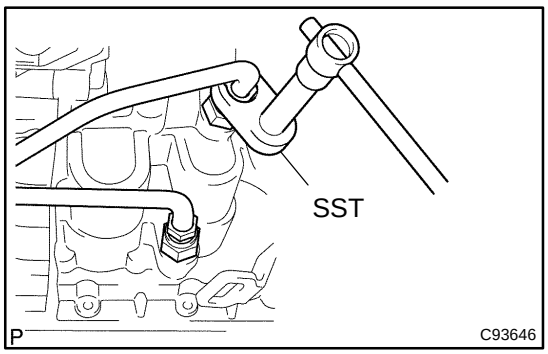

12. DISCONNECT OIL COOLER INLET TUBE NO.1

(a) Using SST, disconnect the oil cooler inlet tube No. 1.
SST 09023–12700

13. DISCONNECT OIL COOLER OUTLET TUBE NO.1

(a) Using SST, disconnect the oil cooler outlet tube No. 1.
SST 09023–12700

14. DISCONNECT OXYGEN SENSOR CONNECTOR

(a) Remove the foot rest.
(b) Pull up the floor carpet.
(c) Disconnect the oxygen sensor connector.

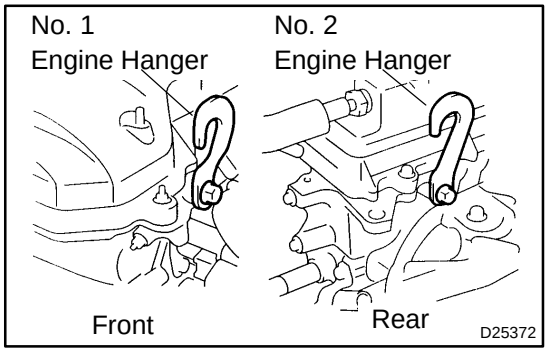

15. SUSPEND ENGINE ASSY

(a) Disconnect the 2 PCV hoses.
(b) Install the No.1 and No.2 engine hangers in the correct direction.
Parts No.:
No.1 engine hanger: 12281–22021
No.2 engine hanger: 12281–15040
Bolt: 91512–B1016
Torque: 38 N·m (387 kgf·cm, 28 ft·lbf)
(c) Attach the engine chain hoist to the engine hangers.

CAUTION:
Do not attempt to hang the engine by hooking the chain to any other parts.

16. REMOVE FRONT WHEELS
17. REMOVE ENGINE UNDER COVER RH
18. REMOVE ENGINE UNDER COVER LH
19. DRAIN AUTOMATIC TRANSAXLE FLUID

(a) Remove the drain plug and gasket, and drain ATF.
(b) Install a new gasket and drain plug.
Torque: 17.5 N·m (178 kgf·cm, 13 ft·lbf)

20. REMOVE EXHAUST PIPE ASSY FRONT (See page 15–4)
21. REMOVE FRONT DRIVE SHAFT ASSY RH (See page 30–15)
SST 09520–01010, 09520–24010 (09520–32040)
22. REMOVE FRONT DRIVE SHAFT ASSY LH (See page 30–15)
SST 09520–01010, 09520–24010 (09520–32040)
23. REMOVE AUTOMATIC TRANSMISSION CASE PROTECTOR

(a) Remove the 2 bolts and case protector.

24. REMOVE STARTER ASSY

(a) Remove the nut and disconnect the starter wire.
(b) Disconnect the connector.
(c) Remove the 2 bolts and starter.

25. SUPPORT AUTOMATIC TRANSAXLE ASSY

(a) Support the automatic transaxle with a transmission jack.

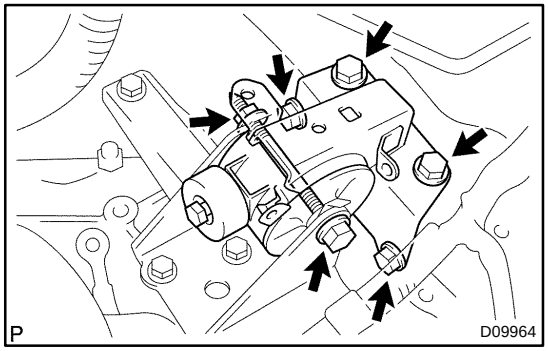

26. REMOVE TRANSVERSE ENGINE ENGINE MOUNTING INSULATOR

(a) Remove the 5 bolts, nut and engine mounting insulator LH.

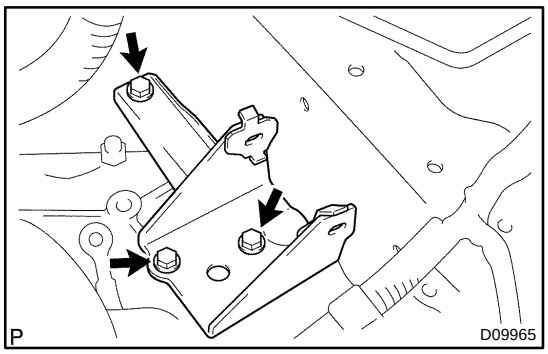

27. REMOVE TRANSVERSE ENGINE ENGINE MOUNTING BRACKET

(a) Remove the 3 bolts and engine mounting bracket LH.

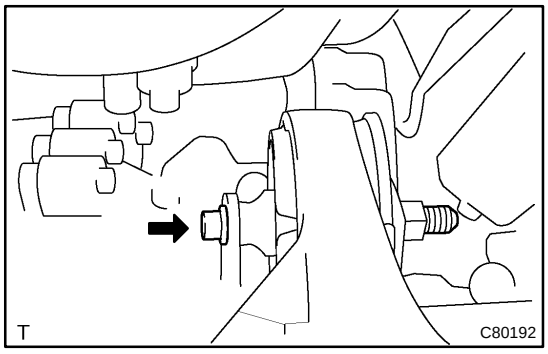

28. REMOVE TRANSVERSE ENGINE ENGINE MOUNTING INSULATOR

(a) Remove the bolt from the engine mounting bracket RR.

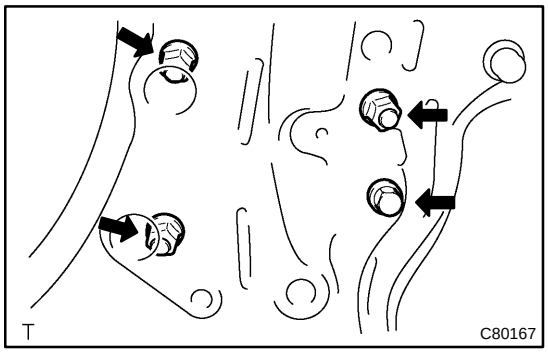

(b) Remove the 3 nuts, bolt and engine mounting insulator RR from the suspension member.

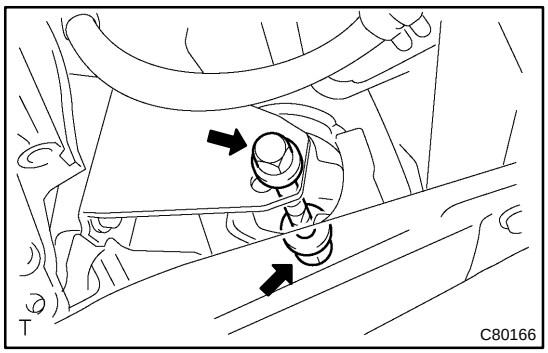

29. REMOVE TRANSVERSE ENGINE ENGINE MOUNTING INSULATOR

(a) Remove the bolt and nut from the engine mounting bracket FR.

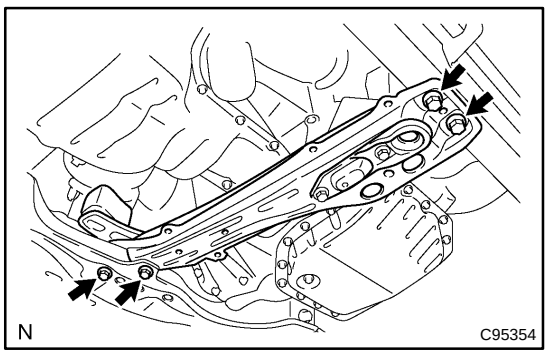

30. REMOVE ENGINE MOUNTING MEMBER SUB–ASSY CENTER

(a) Remove the 4 bolts, dynamic damper and member sub–assy center with engine mounting insulator FR.

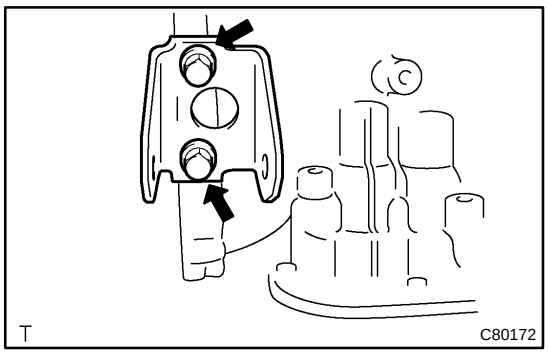

31. REMOVE TRANSVERSE ENGINE ENGINE MOUNTING BRACKET

(a) Remove the 2 bolts and engine mounting bracket FR.

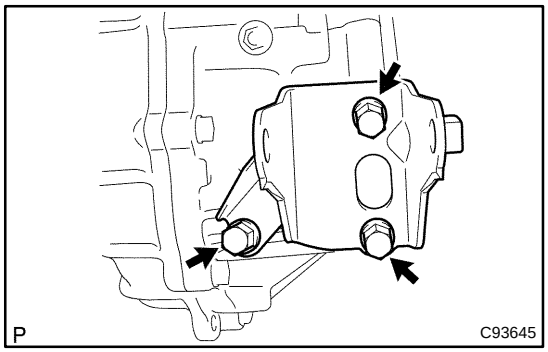

32. REMOVE TRANSVERSE ENGINE ENGINE MOUNTING BRACKET

(a) Remove the 3 bolts and engine mounting bracket RR.

33. REMOVE FLYWHEEL HOUSING UNDER COVER

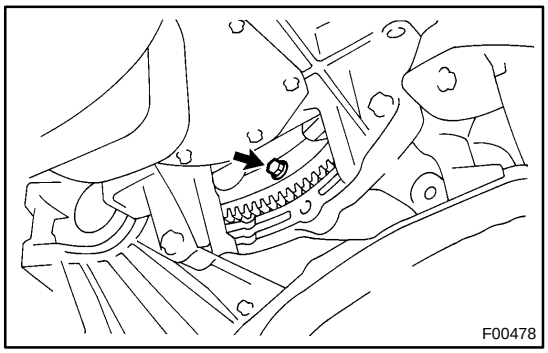

34. REMOVE AUTOMATIC TRANSAXLE ASSY

(a) Turn the crankshaft to gain access and remove the 6 bolts while holding the crankshaft pulley bolt with a wrench.

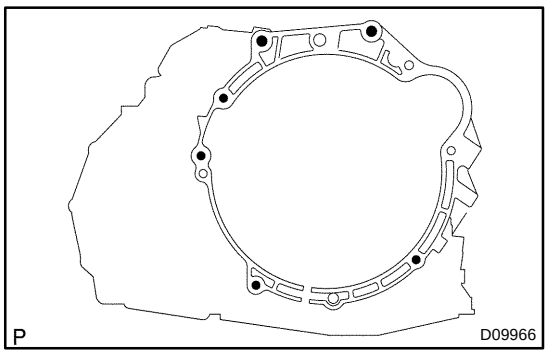

(b) Remove the 6 bolts.

(c) Separate and remove the automatic transaxle.

35. REMOVE TORQUE CONVERTER CLUTCH ASSY

36. INSPECT TORQUE CONVERTER CLUTCH ASSY (See page 40–43)

SST 09350–32014 (09351–32010, 09351–32020)

37. INSTALL TORQUE CONVERTER CLUTCH ASSY

(a) Install the torque converter clutch to the automatic transaxle.

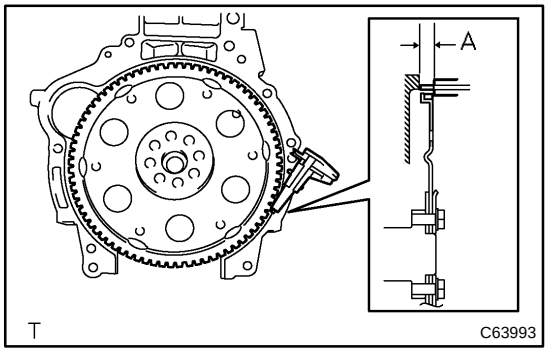

(b) Using vernier calipers, measure the dimension ”A” between the transaxle fitting part and the converter fitting part of the drive plate.

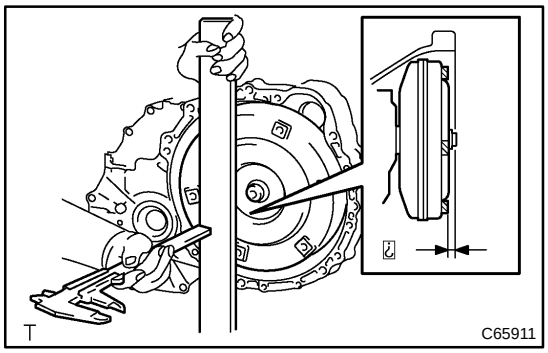

(c) Using vernier calipers and a straight edge, measure the dimension ”B” shown in the illustration and check that ”B” is greater than ”A” measured in (b).

Standard: A + 1 mm or more

NOTICE:

Do not add the thickness of straight edge.

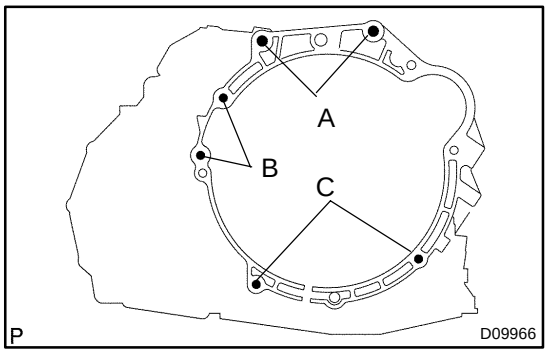

38. INSTALL AUTOMATIC TRANSAXLE ASSY

(a) Install the automatic transaxle and 6 bolts to the engine.

Torque:

Bolt A: 64 N·m (650 kgf·cm, 47 ft·lbf)

Bolt B: 46 N·m (470 kgf·cm, 34 ft·lbf)

Bolt C: 23 N·m (235 kgf·cm, 17 ft·lbf)

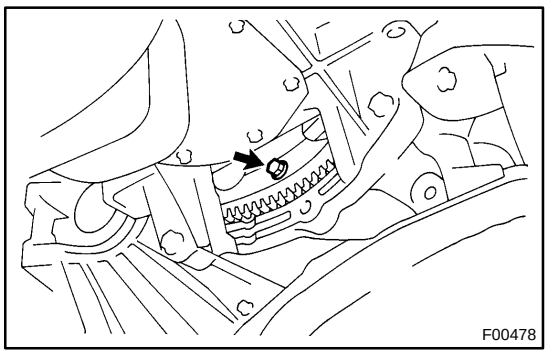

(b) Install the 6 torque converter mounting bolts.

Torque: 28 N·m (285 kgf·cm, 20 ft·lbf)

HINT:

First install yellowish green colored bolt and then the 5 bolts.

39. INSTALL FLYWHEEL HOUSING UNDER COVER

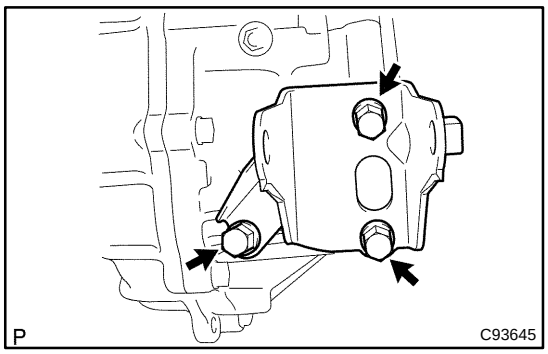

40. INSTALL TRANSVERSE ENGINE ENGINE MOUNTING BRACKET

(a) Install the engine mounting bracket RR and 3 bolts to the automatic transaxle.
Torque: 64 N·m (652 kgf·cm, 47 ft·lbf)

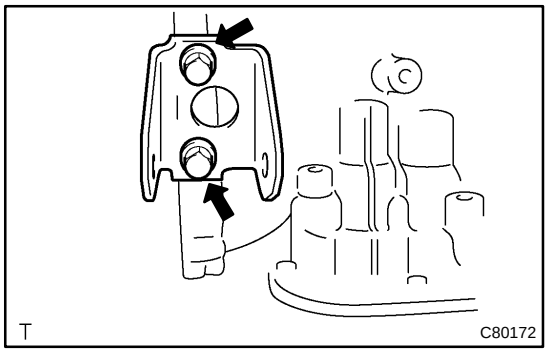

41. INSTALL TRANSVERSE ENGINE ENGINE MOUNTING BRACKET

(a) Install the engine mounting bracket FR and 2 bolts to the automatic transaxle.
Torque: 64 N·m (652 kgf·cm, 47 ft·lbf)

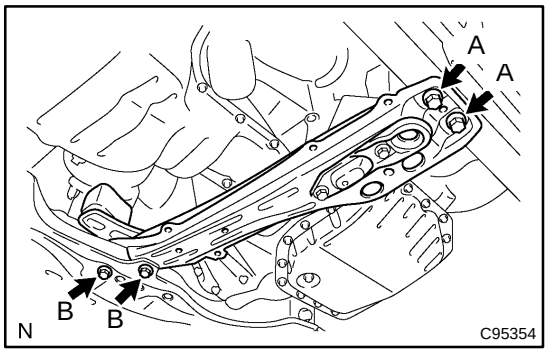

42. INSTALL ENGINE MOUNTING MEMBER SUB–ASSY CENTER

(a) Install the dynamic damper, member sub–assy center with engine mounting insulator FR and 4 bolts.
Torque:
Bolt A: 39 N·m (398 kgf·cm, 29 ft·lbf)
Bolt B: 52 N·m (530 kgf·cm, 38 ft·lbf)

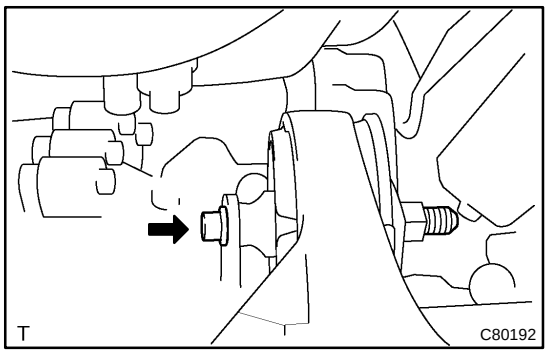

43. INSTALL TRANSVERSE ENGINE ENGINE MOUNTING INSULATOR

(a) Install the engine mounting insulator RR and bolt to the engine mounting bracket RR.
Torque: 87 N·m (887 kgf·cm, 64 ft·lbf)

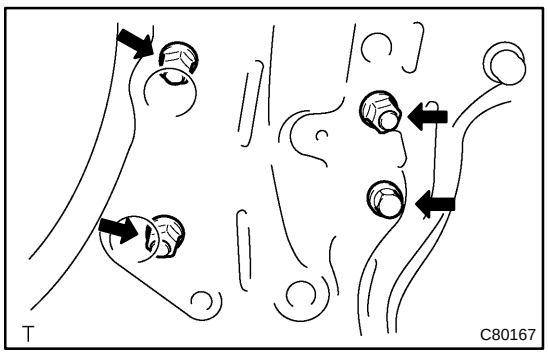

(b) Tighten the 3 nuts and bolt.
Torque: 52 N·m (530 kgf·cm, 38 ft·lbf)

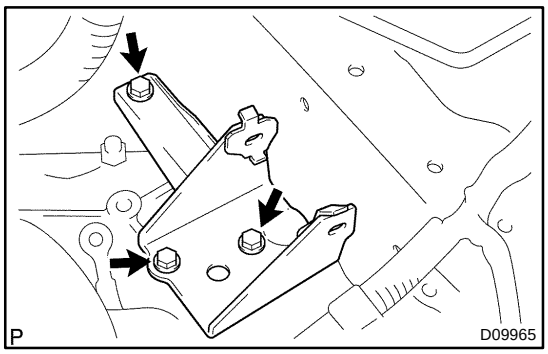

44. INSTALL TRANSVERSE ENGINE ENGINE MOUNTING INSULATOR

(a) Install the engine mounting bracket LH and 3 bolts to the automatic transaxle.
Torque: 52 N·m (530 kgf·cm, 38 ft·lbf)

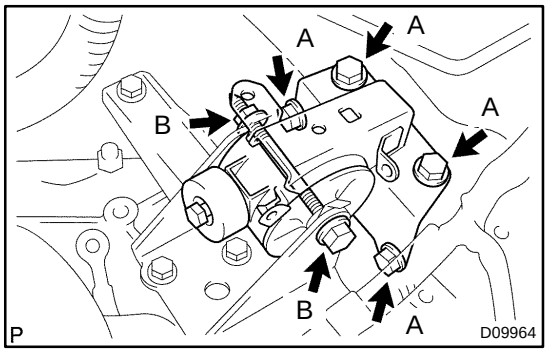

45. INSTALL TRANSVERSE ENGINE ENGINE MOUNTING BRACKET

(a) Install the engine mounting insulator LH, 5 bolts and nut.
Torque:
Bolt A: 52 N·m (530 kgf·cm, 38 ft·lbf)
Bolt B: 80 N·m (815 kgf·cm, 59 ft·lbf)
Nut B: 80 N·m (815 kgf·cm, 59 ft·lbf)

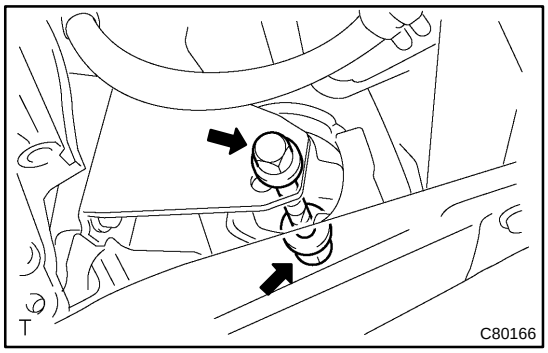

46. INSTALL TRANSVERSE ENGINE ENGINE MOUNTING INSULATOR

(a) Install the bolt and nut to the engine mounting bracket FR.
Torque: 52 N·m (530 kgf·cm, 38 ft·lbf)

47. INSTALL STARTER ASSY

(a) Install the starter and 2 bolts.
Torque: 39 N·m (400 kgf·cm, 29 ft·lbf)

(b) Connect the connecter.

(c) Install the starter wire and nut.
Torque: 13 N·m (132 kgf·cm, 10 ft·lbf)

48. INSTALL AUTOMATIC TRANSMISSION CASE PROTECTOR

(a) Install the case protector with the 2 bolts.
Torque: 18 N·m (182 kgf·cm, 14 ft·lbf)

49. INSTALL FRONT DRIVE SHAFT ASSY LH (See page 30–15)

50. INSTALL FRONT DRIVE SHAFT ASSY RH (See page 30–15)

51. INSTALL EXHAUST PIPE ASSY FRONT (See page 15–4)

52. INSTALL ENGINE UNDER COVER LH

53. INSTALL ENGINE UNDER COVER RH

54. INSTALL FRONT WHEELS
Torque: 103 N·m (1,050 kgf·cm, 76 ft·lbf)

55. INSTALL OXYGEN SENSOR CONNECTOR

(a) Connect the oxygen sensor connector.

(b) Install the floor carpet and foot rest.

56. INSTALL TRANSMISSION OIL FILLER TUBE SUB–ASSY

(a) Temporarily install the oil cooler outlet tube No. 1.
(b) Temporarily install the oil cooler inlet tube No. 1.
(c) Coat a new O–ring with ATF, and install them to the oil filler tube.
(d) Install the oil filler tube to the automatic transaxle.

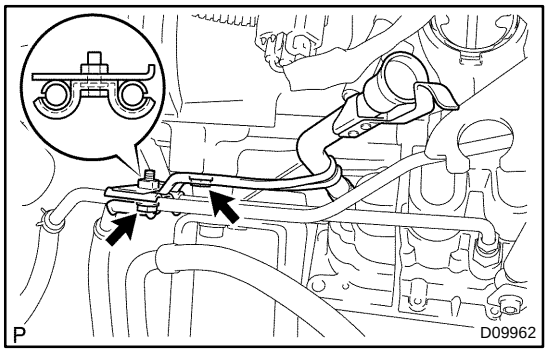

(e) Install the oil cooler tube clamp and 2 bolts.
Torque: 5.5 N·m (56 kgf·cm, 49 in.·lbf)
(f) Install the ATF lever gauge.

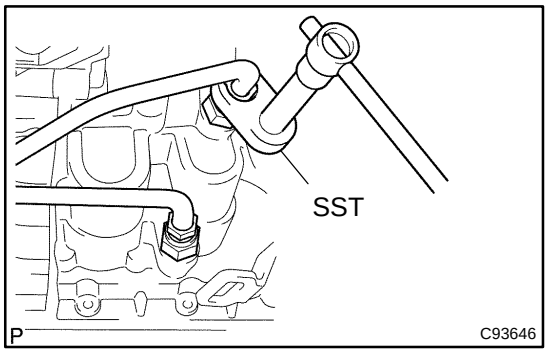

57. INSTALL OIL COOLER INLET TUBE NO.1

(a) Using SST, tighten the oil cooler inlet tube No. 1.
SST 09023–12700
Torque: 34.5 N·m (350 kgf·cm, 25 ft·lbf)

58. INSTALL OIL COOLER OUTLET TUBE NO.1

(a) Using SST, tighten the oil cooler outlet tube No. 1.
SST 09023–12700
Torque: 34.5 N·m (350 kgf·cm, 25 ft·lbf)

59. CONNECT CONNECTOR

(a) Connect the transmission wire connector.
(b) Connect the park/neutral position switch connector.
(c) w/o ABS:
Connect the speedometer sensor connector.

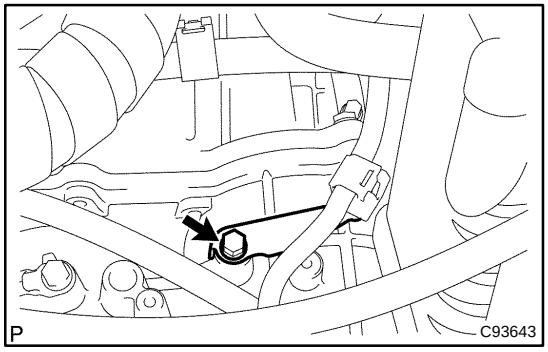

60. INSTALL WIRE HARNESS

(a) Install the wire harness clamp bracket and bolt.
Torque: 12.75 N·m (130 kgf·cm, 9 ft·lbf)

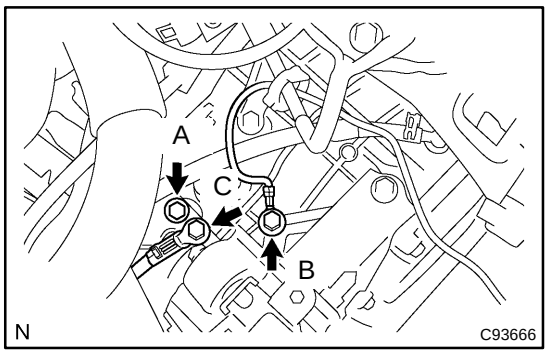

(b) Install the wire harness clamp bracket and 2 wire harnesses with the 3 bolts.
Torque:
Bolt A: 25.5 N·m (260 kgf·cm, 19 ft·lbf)
Bolt B: 10 N·m (102 kgf·cm, 7 ft·lbf)
Bolt C: 13 N·m (132 kgf·cm, 10 ft·lbf)

61. INSTALL TRANSMISSION CONTROL CABLE BRACKET NO.1

(a) Install the control cable bracket and 2 bolts.
Torque: 12 N·m (122 kgf·cm, 9 ft·lbf)

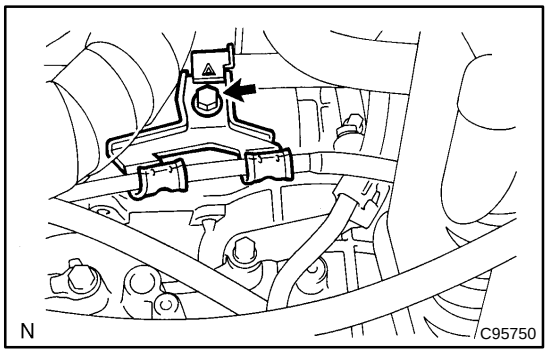

62. INSTALL TRANSMISSION CONTROL CABLE SUPPORT

(a) Install the control cable support and bolt.
Torque: 12 N·m (122 kgf·cm, 9 ft·lbf)

(b) Connect the control cable and wire harness to the control cable support.

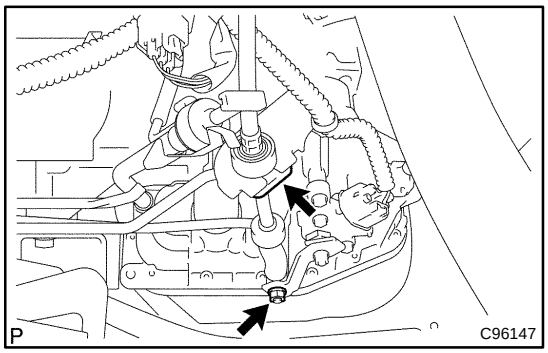

63. INSTALL FLOOR SHIFT CABLE TRANSMISSION CONTROL SHIFT

(a) Temporarily install the control cable to the control shaft lever with the nut.

(b) Install the control cable and clip to the bracket.

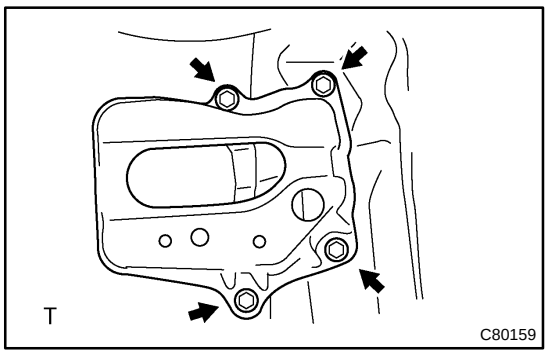

64. INSTALL BATTERY CARRIER

(a) Install the battery carrier and 4 bolts.
Torque: 13 N·m (132 kgf·cm, 10 ft·lbf)

65. INSTALL AIR CLEANER ASSEMBLY WITH HOSE
Torque: 7.0 N·m (71 kgf·cm, 62 in.·lbf)

66. INSTALL CYLINDER HEAD COVER NO.2
Torque: 7.0 N·m (71 kgf·cm, 62 in.·lbf)

67. INSTALL HOOD SUB–ASSY
Torque: 13 N·m (130 kgf·cm, 10 ft·lbf)
68. INSPECT HOOD SUB–ASSY (See page 75–1)
69. ADJUST HOOD SUB–ASSY (See page 75–1)
70. ADD AUTOMATIC TRANSAXLE FLUID
71. INSPECT AUTOMATIC TRANSAXLE FLUID (See page 40–2)
72. ADJUST SHIFT LEVER POSITION (See page 40–87)
73. INSPECT SHIFT LEVER POSITION (See page 40–87)
74. INSPECT FRONT WHEEL ARIMENT (See page 26–6)
75. CHECK ABS SPEED SENSOR SIGNAL (W/ ABS) (See page 05–316)

TRANSMISSION VALVE BODY ASSY (U240E)

400N1–01

REPLACEMENT

1. REMOVE ENGINE UNDER COVER LH

2. DRAIN AUTOMATIC TRANSAXLE FLUID

(a) Remove the drain plug and gasket, and drain ATF.

(b) Install a new gasket and drain plug.

Torque: 49 N·m (500 kgf·cm, 36 ft·lbf)

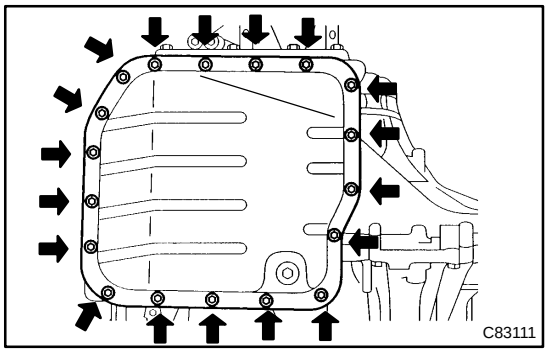

3. REMOVE AUTOMATIC TRANSAXLE OIL PAN SUB–ASSY

(a) Remove the 18 bolts, oil pan and gasket.

NOTICE:

Some fluid will remain in the oil pan. Remove all pan bolts, and carefully remove the oil pan assembly.

(b) Remove the 2 magnets from the oil pan.

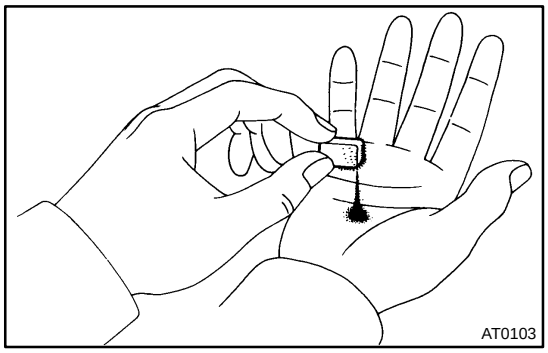

(c) Examine particles in pan.

(1) Remove the magnets and use them to collect any steel chips. Look carefully at the chips and particles in the pan and the magnet to anticipate what type of wear you will find in the transaxle.

Steel (magnetic): bearing, gear and plate wear

Brass (non–magnetic): bearing wear

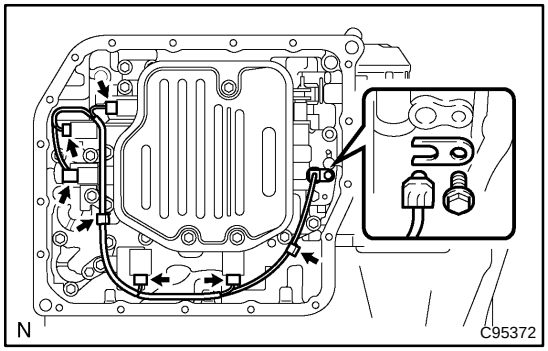

4. SEPARATE TRANSMISSION WIRE

(a) Disconnect the 5 shift solenoid valve connectors.

(b) Remove the bolt and lock plate, and disconnect the ATF temperature sensor.

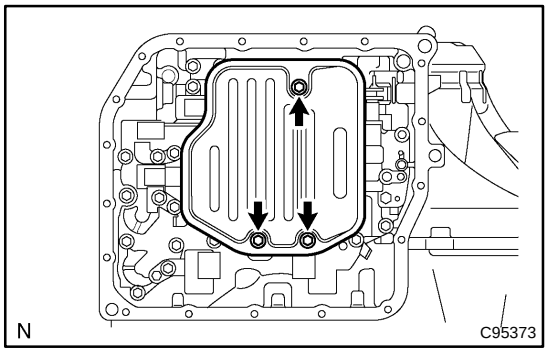

5. REMOVE VALVE BODY OIL STRAINER ASSY

(a) Remove the 3 bolts and oil strainer.

NOTICE:

Be careful as some fluid will come out with the oil strainer.

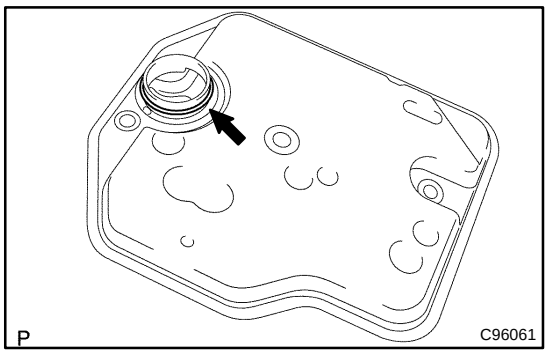

(b) Remove the O–ring from the oil strainer.

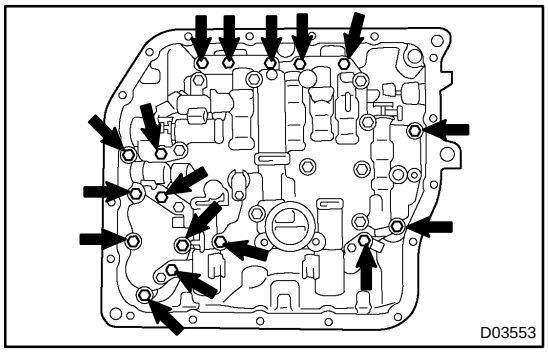

6. REMOVE TRANSMISSION VALVE BODY ASSY

(a) Support the valve body assy and remove the 17 bolts and the valve body assy.

NOTICE:

Be careful not to drop the check valve body, spring and accumulator piston.

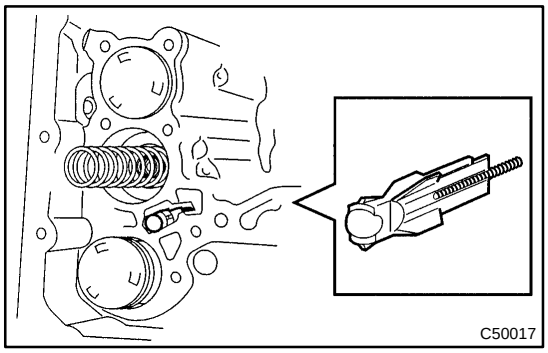

(b) Remove the check ball body and spring.

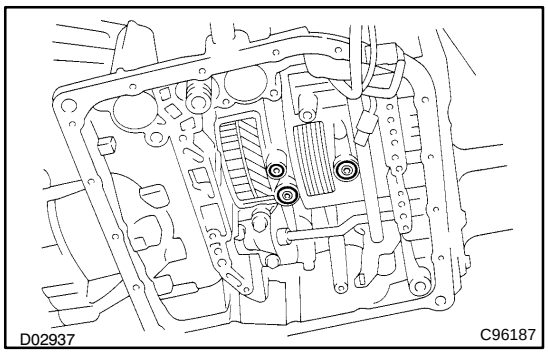

(c) Remove the 3 apply gaskets.

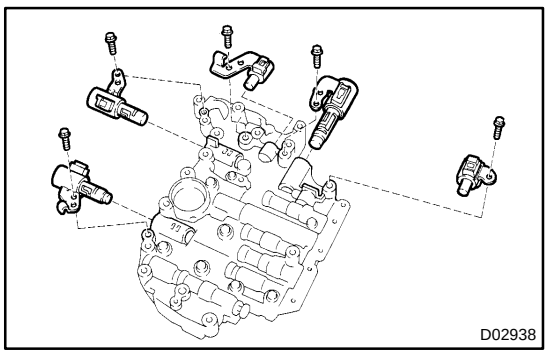

(d) Remove the 5 bolts and 5 shift solenoid valves.

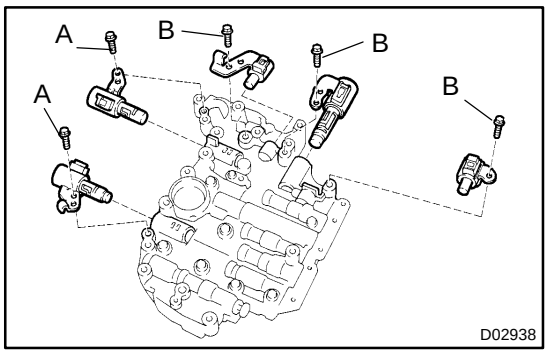

7. INSTALL TRANSMISSION VALVE BODY ASSY

(a) Install the 5 shift solenoid valves with the 5 bolts.

Torque:
Bolt A: 6.6 N·m (67 kgf·cm, 58 in.·lbf)
Bolt B: 10.8 N·m (110 kgf·cm, 8 ft ·lbf)
Bolt length:
Bolt A: 12 mm (0.47 in.)
Bolt B: 45 mm (1.77 in.)

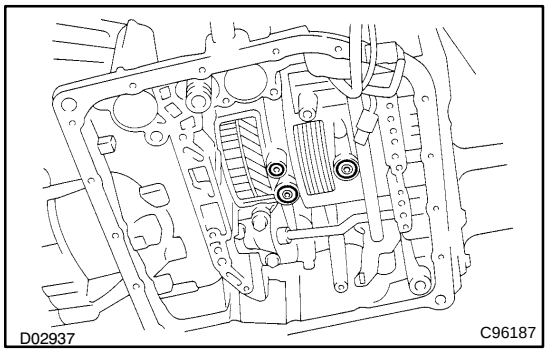

(b) Coat 3 new apply gaskets with ATF.

(c) Install the 3 new apply gaskets to the transaxle case.

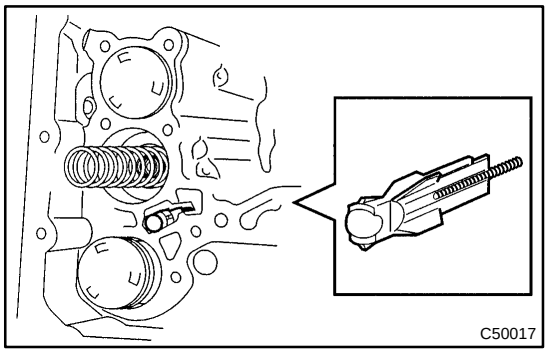

(d) Install the spring and check ball body.

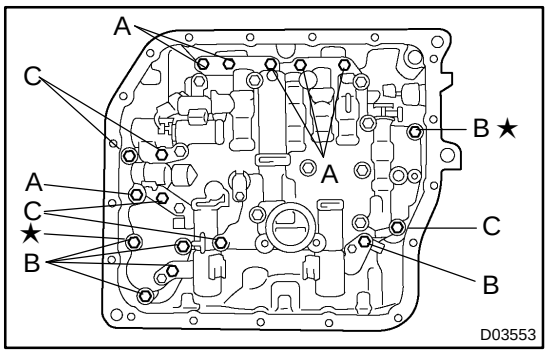

(e) Align the groove of the manual valve with the pin of lever.

(f) Install the 17 bolts.

Torque: 10.8 N·m (110 kgf·cm, 8 ft·lbf)

NOTICE:

- **Push the valve body against the accumulator piston spring and the check ball body to install it.**
- **Tighten those bolts marked by ★ in the illustration first temporarily because they are positioning bolts.**

Bolt length:
Bolt A: 25 mm (0.984 in.)
Bolt B: 41 mm (1.614 in.)
Bolt C: 45 mm (1.771 in.)

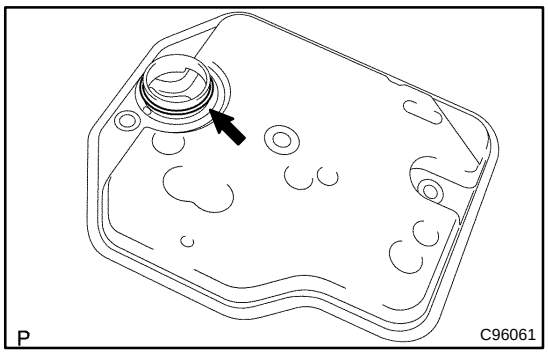

8. INSTALL VALVE BODY OIL STRAINER ASSY

(a) Coat a new O–ring with ATF.

(b) Install the O–ring to the oil strainer.

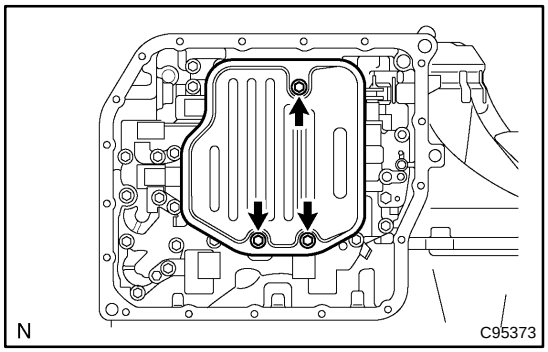

(c) Install the oil strainer with the 3 bolts.
Torque: 10.8 N·m (110 kgf·cm, 8 ft·lbf)

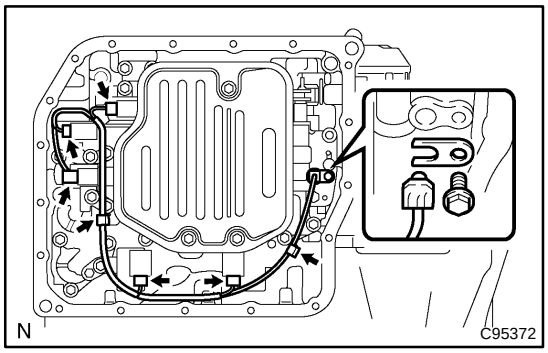

9. INSTALL TRANSMISSION WIRE

(a) Coat an O–ring with ATF.

(b) Install the ATF temperature sensor with the lock plate and bolt.
Torque: 6.6 N·m (67 kgf·cm, 58 in.·lbf)

(c) Connect the 5 shift solenoid valve connectors.

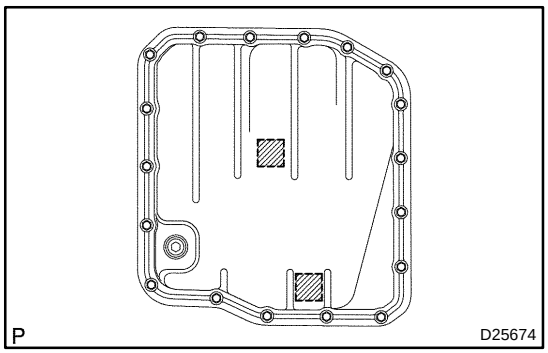

10. INSTALL AUTOMATIC TRANSAXLE OIL PAN SUB–ASSY

(a) Install the 2 magnets in the oil pan.

(b) Apply seal packing or equivalent to 18 bolts.
Seal packing:
THREE BOND 2430 or equivalent

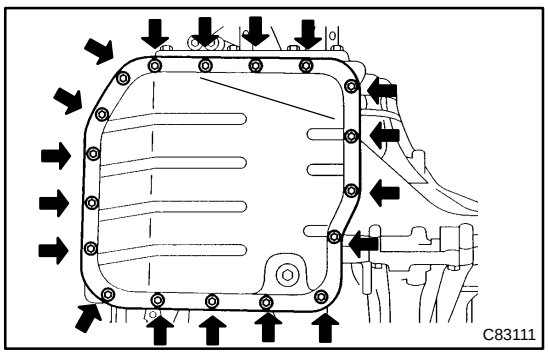

(c) Install a new gasket, oil pan and 18 bolts to the transaxle case.
Torque: 7.8 N·m (80 kgf·cm, 69 in.·lbf)

NOTICE:

Because the bolts should be seal bolts, apply seal packing to bolts and tighten them within 10 minutes after application.

11. INSTALL ENGINE UNDER COVER LH
12. ADD AUTOMATIC TRANSAXLE FLUID
13. INSPECT AUTOMATIC TRANSAXLE FLUID (See page 40–2)

TRANSMISSION VALVE BODY ASSY (A246E)

400N0–01

REPLACEMENT

1. REMOVE ENGINE UNDER COVER LH

2. DRAIN AUTOMATIC TRANSAXLE FLUID

(a) Remove the drain plug, gasket and drain ATF.

(b) Install a new gasket and drain plug.

Torque: 17.5 N·m (178 kgf·cm, 13 ft·lbf)

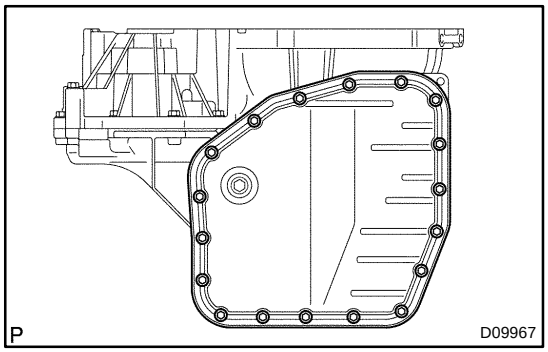

3. REMOVE AUTOMATIC TRANSAXLE OIL PAN SUB–ASSY

(a) Remove the 18 bolts, oil pan and gasket.

NOTICE:

Some fluid will remain in the oil pan. Remove all pan bolts, and carefully remove the oil pan assembly. Discard the gasket.

(b) Remove the 2 magnets from oil pan.

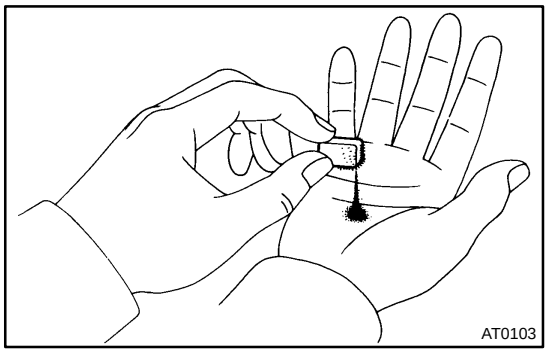

(c) Examine particles in pan.

(1) Remove the magnets and use them to collect any steel chips. Look carefully at the chips and particles in the pan and the magnet to anticipate what type of wear you will find in the transaxle.

Steel (magnetic): bearing, gear and plate wear

Brass (non–magnetic): bearing wear

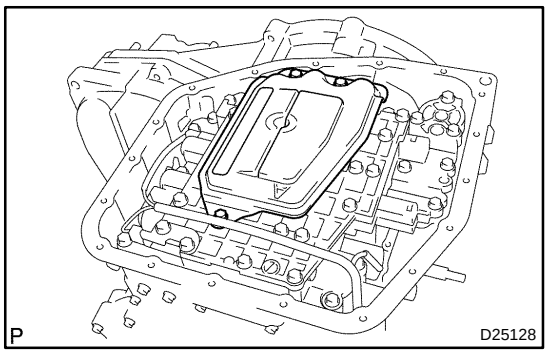

4. REMOVE VALVE BODY OIL STRAINER ASSY

(a) Remove the 3 bolts and oil strainer.

NOTICE:

Be careful as some fluid will come out with the oil strainer.

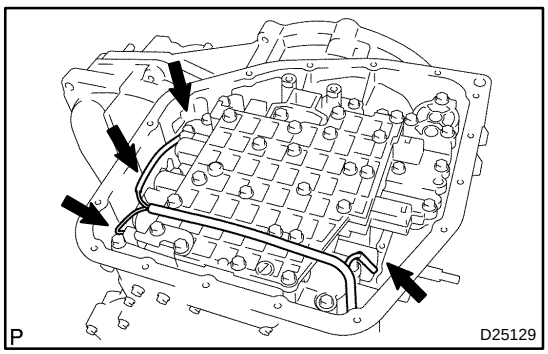

5. REMOVE TRANSMISSION VALVE BODY ASSY

(a) Disconnect the 4 solenoid connecters.

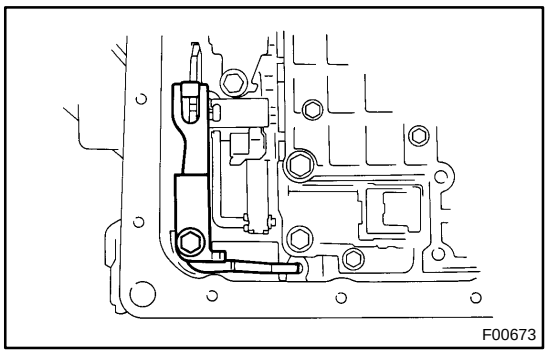

(b) Remove the bolt and manual detent spring.

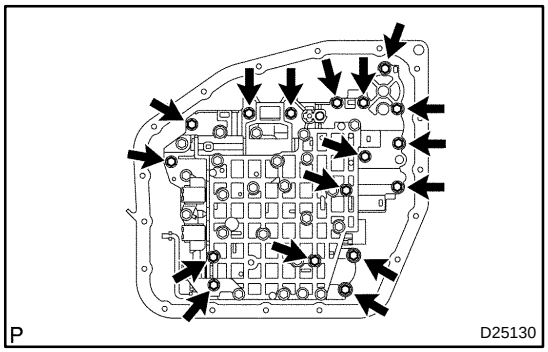

(c) Remove the 17 bolts.

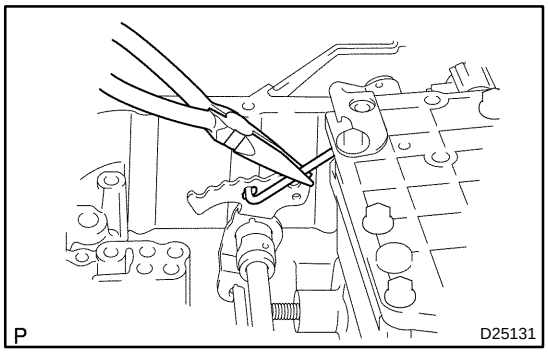

(d) While disconnecting the manual valve connecting rod from the manual valve lever, remove the valve body with the manual valve together.

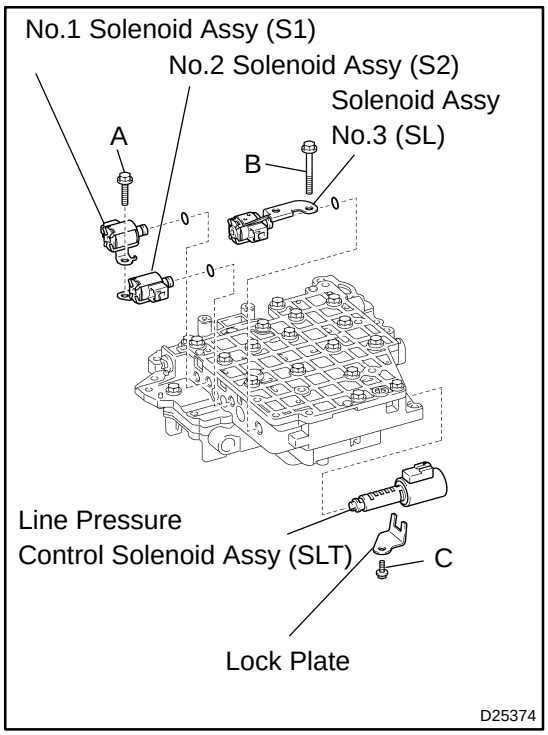

(e) Remove the 2 bolts and 3 solenoid valves.
(f) Remove the 3 O–rings from each of the solenoid valves.
(g) Remove the bolt, lock plate and line pressure control valve.

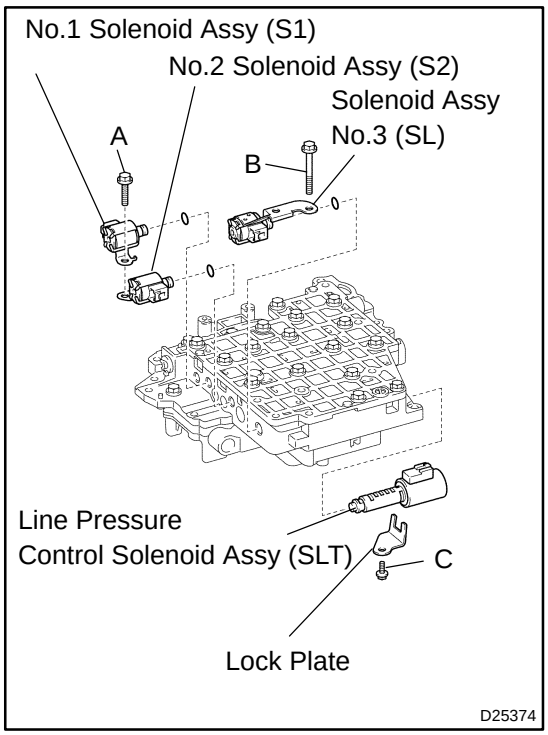

6. INSTALL TRANSMISSION VALVE BODY ASSY

(a) Coat 3 new O–rings with ATF and install them to each solenoid valves.

(b) Install the No.1 and No.2 solenoid valves with the bolt.

(c) Install the No.3 solenoid valve with the bolt.

(d) Install the line pressure control solenoid valve and lock plate with the bolt.

Torque:
Bolt A: 11 N·m (110 kgf·cm, 8 ft·lbf)
Bolt B: 11 N·m (110 kgf·cm, 8 ft·lbf)
Bolt C: 6.5 N·m (66 kgf·cm, 58 in.·lbf)
Bolt length:
Bolt A: 25 mm (0.984 in.)
Bolt B: 60 mm (2.362 in.)
Bolt C: 12 mm (0.472 in.)

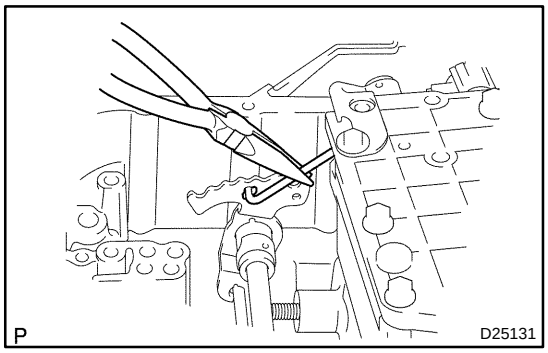

(e) While connecting the manual valve connecting rod to the manual valve lever, install the valve body with the manual valve together.

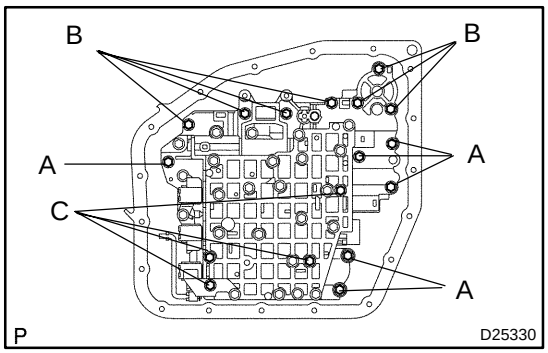

(f) Install the 17 bolts.

Bolt length:
Bolt A: 20 mm (0.79 in.)
Bolt B: 28 mm (1.10 in.)
Bolt C: 50 mm (1.97 in.)
Torque: 10 N·m (100 kgf·cm, 7 ft·lbf)

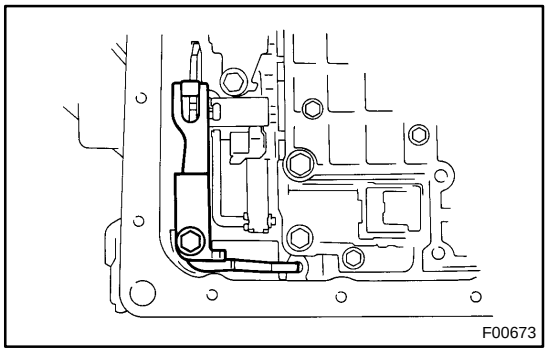

(g) Install the manual detent spring and bolt.

Torque: 10 N·m (100 kgf·cm, 7 ft·lbf)

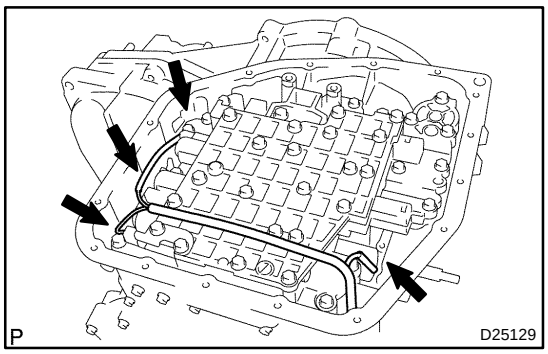

(h) Connect the 4 solenoid connectors.

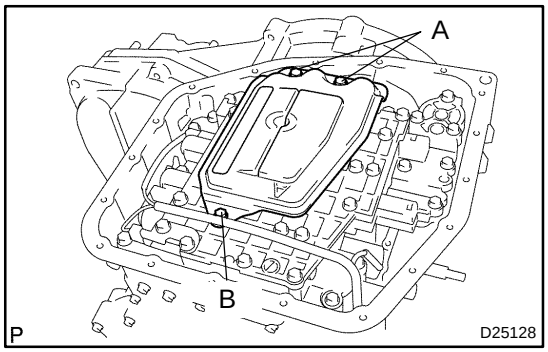

7. INSTALL VALVE BODY OIL STRAINER ASSY

(a) Install the oil strainer with the 3 bolts.

Bolt length:
A bolt: 12 mm (0.47 in.)
B bolt: 20 mm (0.79 in.)
Torque: 10 N·m (100 kgf·cm, 7 ft·lbf)

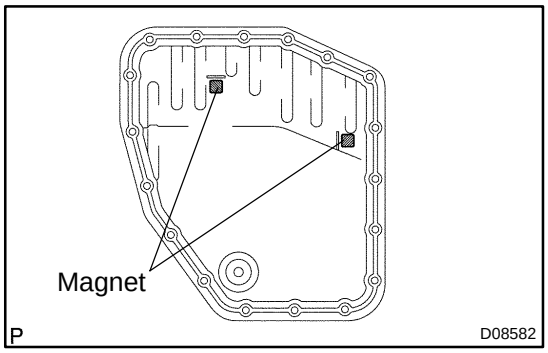

8. INSTALL AUTOMATIC TRANSAXLE OIL PAN SUB–ASSY

(a) Install the 2 magnets to the oil pan.

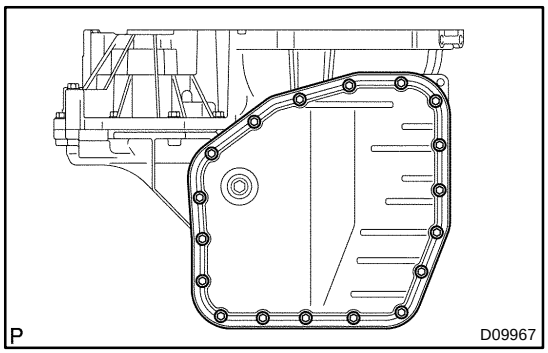

(b) Install a new gasket to the oil pan and install them to the transaxle.

(c) Install the 18 bolts.

Torque: 5.3 N·m (55 kgf·cm, 48 in.·lbf)

9. INSTALL ENGINE UNDER COVER LH

10. ADD AUTOMATIC TRANSAXLE FLUID

11. INSPECT AUTOMATIC TRANSAXLE FLUID (See page 40–2)

TRANSMISSION WIRE (A246E)

400N3–01

REPLACEMENT

1. REMOVE TRANSMISSION VALVE BODY ASSY (See page 40–49)

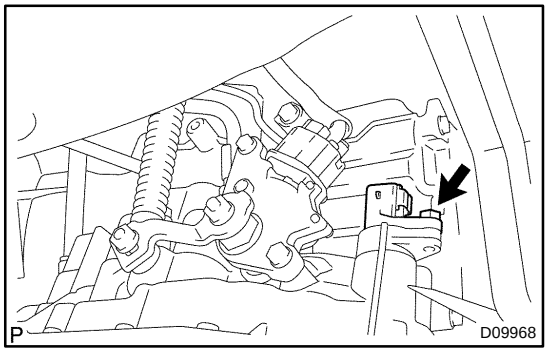

2. REMOVE TRANSMISSION WIRE

(a) Disconnect the transmission wire connector.

(b) Removal the bolt and transmission wire.

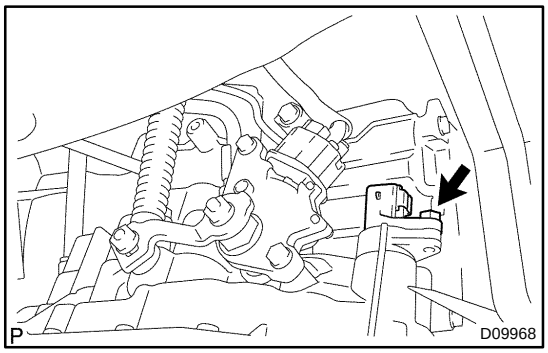

3. INSTALL TRANSMISSION WIRE

(a) Coat a O–ring with ATF.

(b) Install the transmission wire and bolt.

Torque: 5.4 N·m (55 kgf·cm, 48 in.·lbf)

(c) Connect the transmission wire connector.

4. INSTALL TRANSMISSION VALVE BODY ASSY (See page 40–49)

400MP–01

ADJUSTMENT

1. INSPECT PARK/NEUTRAL POSITION SWITCH ASSY

(a) Apply the parking brake and turn the ignition switch ON.

(b) Depress the brake pedal and check that the engine starts only when the shift lever is set in N or P position and it does not start in the other position.

(c) Check that the back–up light comes on and the reverse warning buzzer sounds only when the shift lever is set in R position and these do not function in the other positions.

If a failure is found, check the park/ neutral position switch for continuity.

A246E:

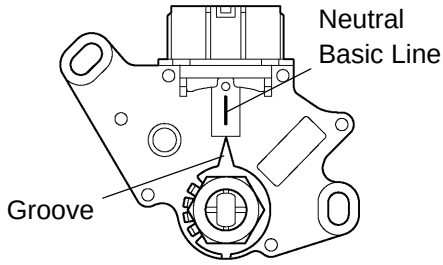

U240E:

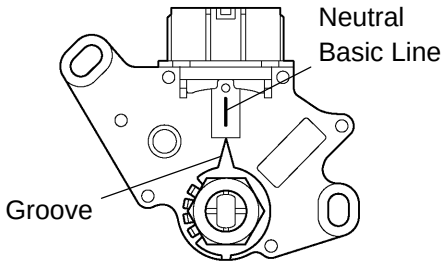

U341F:

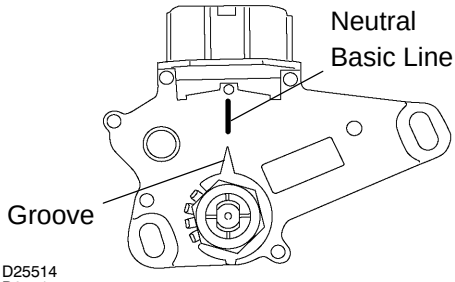

D25514
D25514
C93937

C96063

2. ADJUST PARK/NEUTRAL POSITION SWITCH ASSY

(a) Loosen the 2 bolts of park/ neutral position switch and set the shift lever to the N position.

(b) Align the groove and neutral basic line.

(c) Hold the switch in position and tighten the 2 bolts.

Torque:

A246E: 5.5 N·m (56 kgf·cm, 49 in.·lbf)

U240E/U341F: 5.4 N·m (55 kgf·cm, 48 in.·lbf)

(d) After adjustment, perform the inspection described in step 1.

PARK/NEUTRAL POSITION SWITCH ASSY (ATM)

400MO–01

REPLACEMENT

1. REMOVE BATTERY

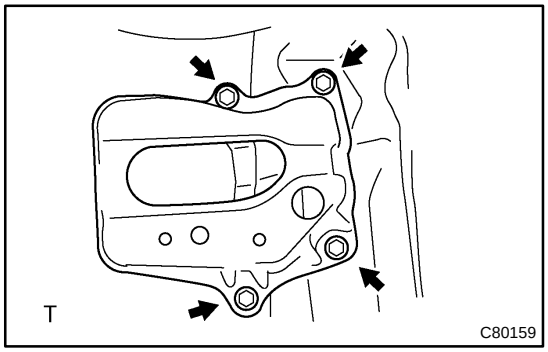

2. REMOVE BATTERY CARRIER

(a) Remove the 4 bolts and battery carrier.

3. DISCONNECT FLOOR SHIFT CABLE TRANSMISSION CONTROL SHIFT

(a) Remove the nut from the control shaft lever.

(b) Disconnect the control cable from the control shaft lever.

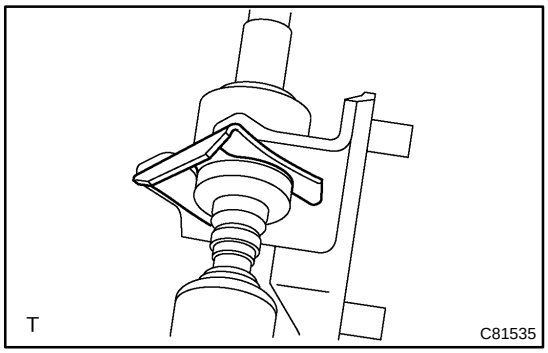

(c) A246E/U341F:
Remove the clip and disconnect the control cable from the bracket.

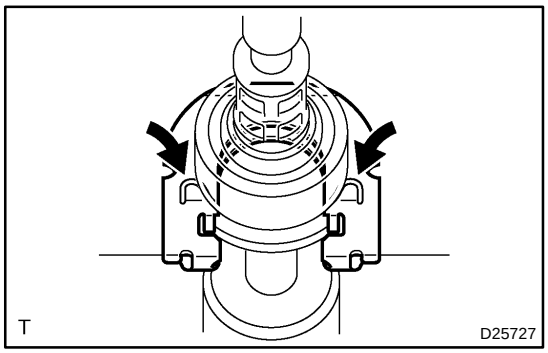

(d) U240E:
Push the claw of the clip and disconnect the control cable from the bracket.

(e) U240E:
Remove the clip from the bracket.

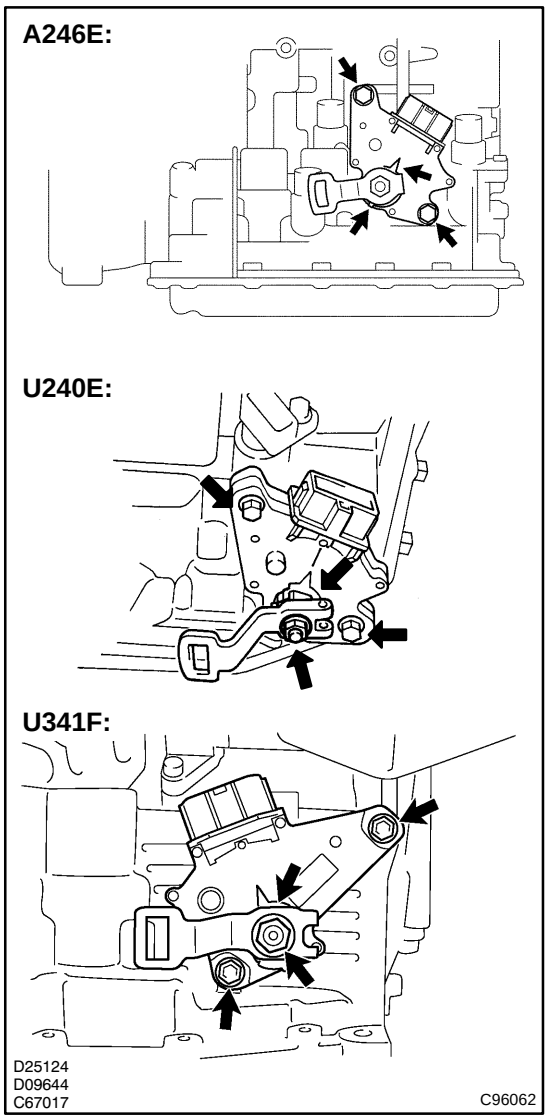

4. REMOVE PARK/NEUTRAL POSITION SWITCH ASSY

(a) Disconnect the park/neutral position switch connector.
(b) Remove the nut, washer and control shaft lever.
(c) Pry out the lock plate and remove the manual valve shaft nut.
(d) Remove the 2 bolts and pull out the park/neutral position switch.

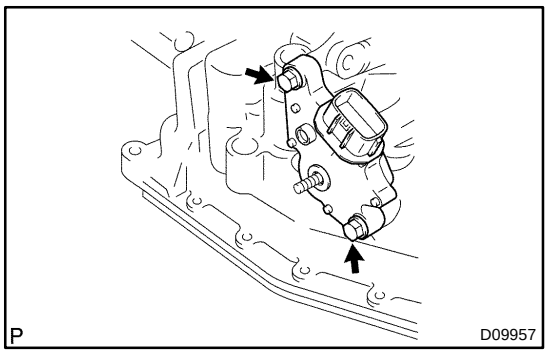

5. INSTALL PARK/NEUTRAL POSITION SWITCH ASSY

(a) A246E:
  (1) Install the park/neutral position switch to the manual valve shaft.
  (2) Temporarily install the 2 bolts.
  (3) Place a new lock plate and tighten the nut.
  Torque: 5.5 N·m (56 kgf·cm, 49 in.·lbf)
  (4) Temporarily install the control shaft lever.

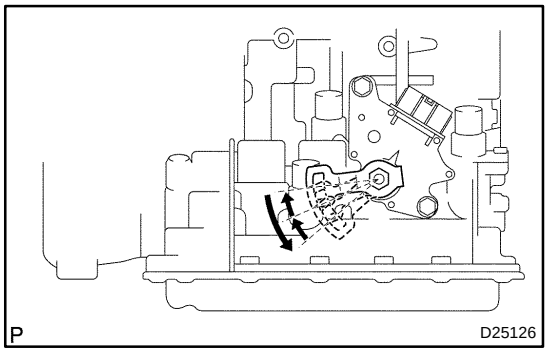

  (5) Turn the lever counterclockwise until it stops, then turn it clockwise 2 notches.
  (6) Remove the control shaft lever.

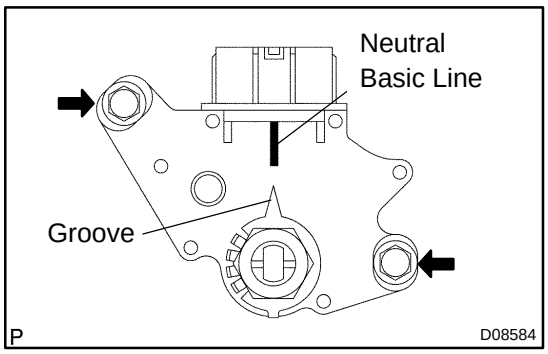

(7) Align the groove with neutral basic line.
(8) Hold the switch in position and tighten the 2 bolts.
Torque: 5.5 N·m (56 kgf·cm, 49 in.·lbf)

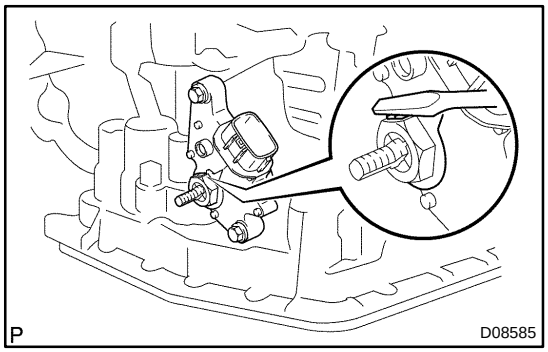

(9) Using a screwdriver, stake the nut with the lock plate.

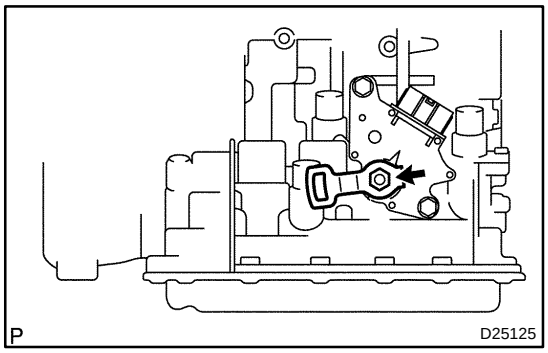

(10) Install the control shaft lever, washer and nut.
Torque: 12.5 N·m (127 kgf·cm, 9 ft·lbf)
(11) Connect the park/neutral position switch connector.

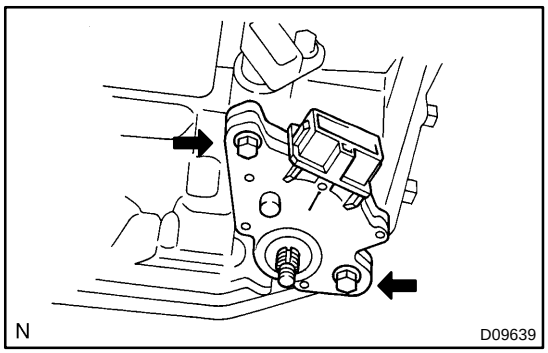

(b) U240E:
(1) Install the park/neutral position switch to the manual valve shaft.
(2) Temporarily install the 2 bolts.
(3) Place a new lock plate and tighten the nut.
Torque: 6.9 N·m (70 kgf·cm, 61 in.·lbf)
(4) Temporarily install the control shaft lever.

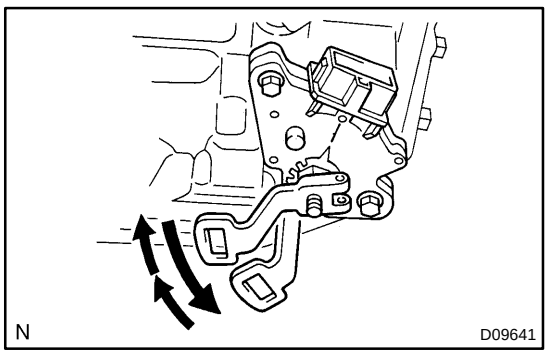

(5) Turn the lever counterclockwise until it stops, then turn it clockwise 2 notches.
(6) Remove the control shaft lever.

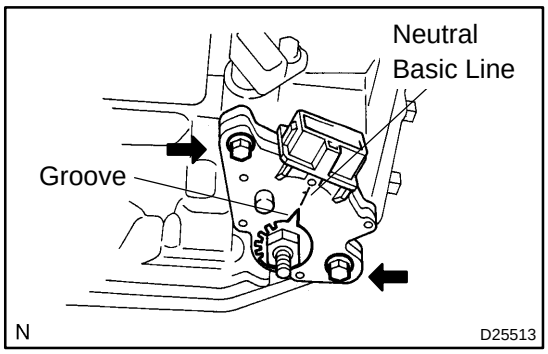

(7) Align the groove with neutral basic line.
(8) Hold the switch in position and tighten the 2 bolts.
Torque: 5.4 N·m (55 kgf·cm, 48 in.·lbf)

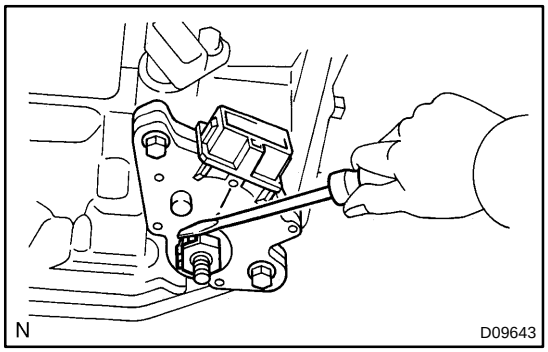

(9) Using a screwdriver, stake the nut with the lock plate.

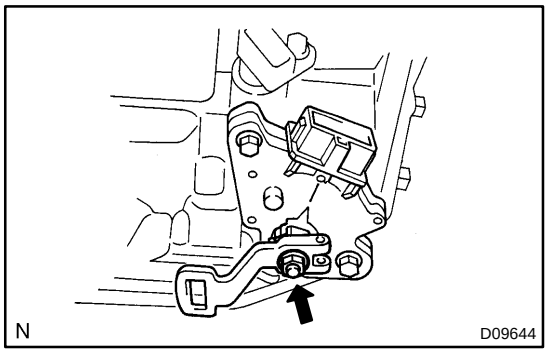

(10) Install the control shaft lever, washer and nut.
Torque: 12.7 N·m (130 kgf·cm, 9 ft·lbf)
(11) Connect the park/neutral position switch connector.

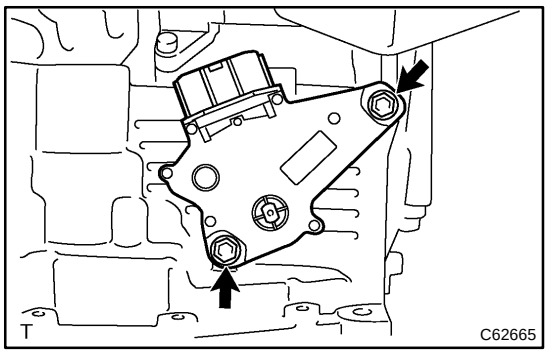

(c) U341F:
(1) Install the park/neutral position switch to the manual valve shaft.
(2) Temporarily install the 2 bolts.
(3) Place a new lock plate and tighten the nut.
Torque: 6.9 N·m (70 kgf·cm, 61 in.·lbf)
(4) Temporarily install the control shaft lever.

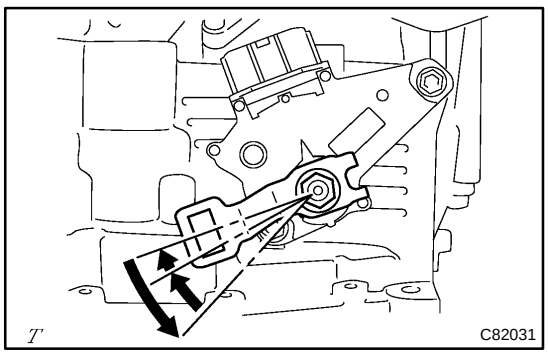

(5) Turn the lever counterclockwise until it stops, then turn it clockwise 2 notches.
(6) Remove the control shaft lever.

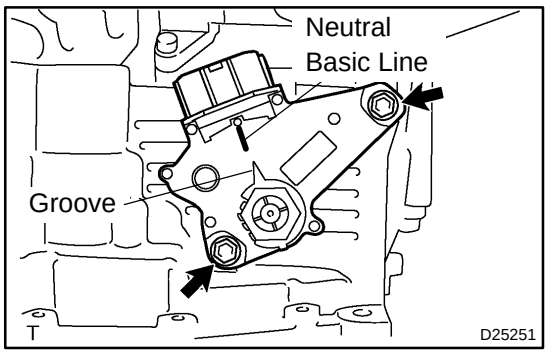

(7) Align the groove with neutral basic line.
(8) Hold the switch in position and tighten the 2 bolts.
Torque: 5.4 N·m (55 kgf·cm, 48 in.·lbf)

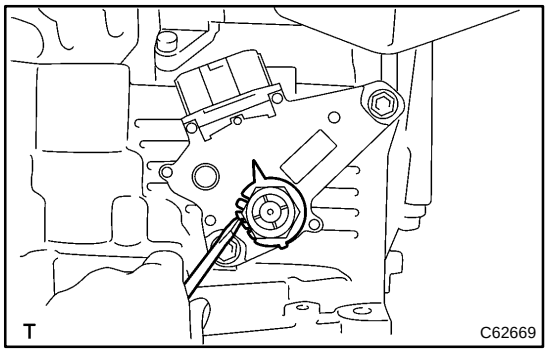

(9) Using a screwdriver, stake the nut with the lock plate.

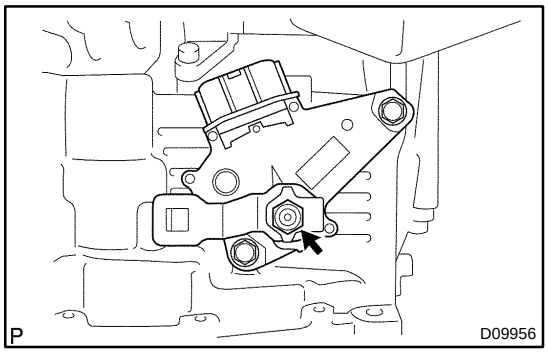

(10) Install the control shaft lever, washer and nut.
Torque: 12.7 N·m (130 kgf·cm, 9 ft·lbf)
(11) Connect the park/neutral position switch connector.

6. INSTALL FLOOR SHIFT CABLE TRANSMISSION CONTROL SHIFT

(a) Temporarily install the control cable to the control shaft lever with nut.

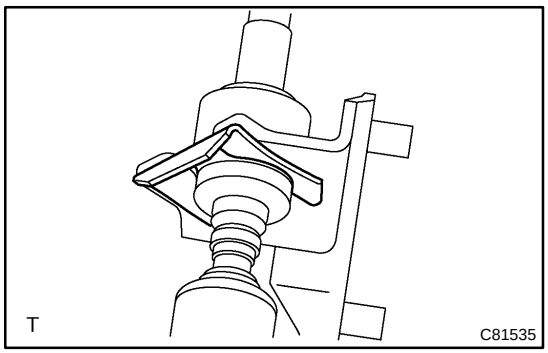

(b) A246E/U341F:
Install the control cable with the clip to the bracket.

NOTICE:
Insert the cable securely.

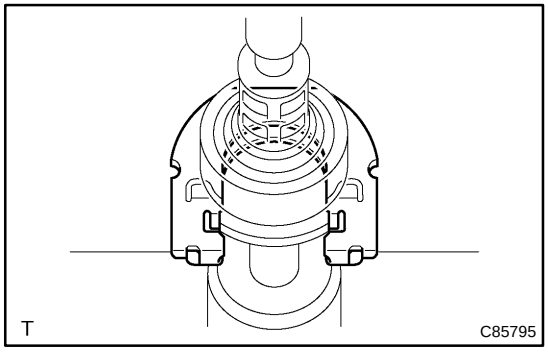

(c) U240E:
Install a new clip to the bracket.
(d) U240E:
Connect the control cable to the bracket.

NOTICE:
Insert the cable securely.

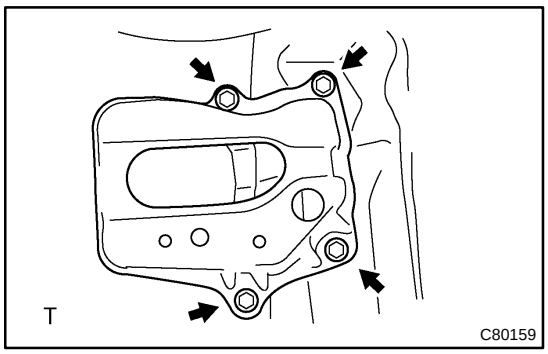

7. INSTALL BATTERY CARRIER

(a) Install the battery carrier and 4 bolts.
Torque: 13 N·m (132 kgf·cm, 10 ft·lbf)

8. ADJUST SHIFT LEVER POSITION (See page 40–87)

9. INSPECT SHIFT LEVER POSITION (See page 40–87)

10. INSPECT PARK/NEUTRAL POSITION SWITCH ASSY (See page 40–9)

TRANSMISSION REVOLUTION SENSOR (U341F)

400MZ–01

REPLACEMENT

1. REMOVE AIR CLEANER ASSEMBLY WITH HOSE

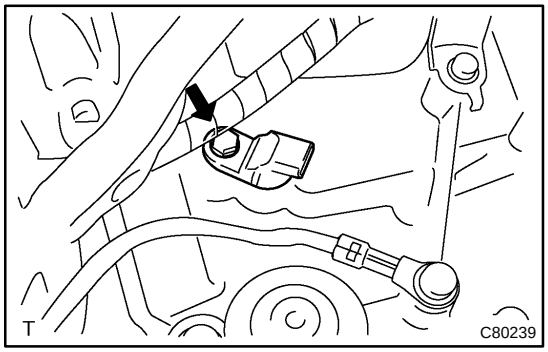

2. REMOVE TRANSMISSION REVOLUTION SENSOR

(a) Disconnect the connector.

(b) Remove the bolt and transmission revolution sensor.

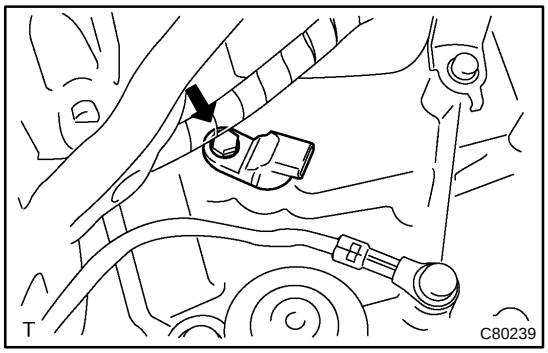

3. INSTALL TRANSMISSION REVOLUTION SENSOR

(a) Coat O–ring with ATF.

(b) Install the transmission revolution sensor with the bolt.
Torque: 5.4 N·m (55 kgf·cm, 48 in.·lbf)

(c) Connect the connector.

4. INSTALL AIR CLEANER ASSEMBLY WITH HOSE
Torque: 7.0 N·m (71 kgf·cm, 62 in.·lbf)

FRONT DIFFERENTIAL OIL SEAL (U341F)

400N8–01

REPLACEMENT

HINT:

When replacing the front differential oil seal (LH) or (RH), perform step 1 to 13 or 14 to 23 respectively.

1. REMOVE FRONT WHEELS

2. REMOVE ENGINE UNDER COVER LH

3. DRAIN AUTOMATIC TRANSAXLE FLUID

(a) Remove the drain plug, gasket and drain ATF.

(b) Install a new gasket and drain plug.

Torque: 49 N·m (500 kgf·cm, 36 ft·lbf)

4. REMOVE FRONT DRIVE SHAFT ASSY LH (See page 30–15)

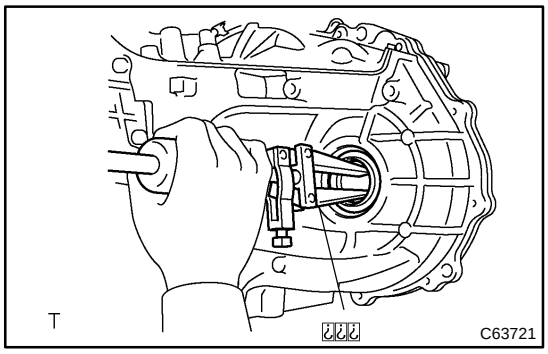

5. REMOVE TRANSAXLE CASE OIL SEAL

(a) Using SST, pull out the oil seal.

SST 09308–00010

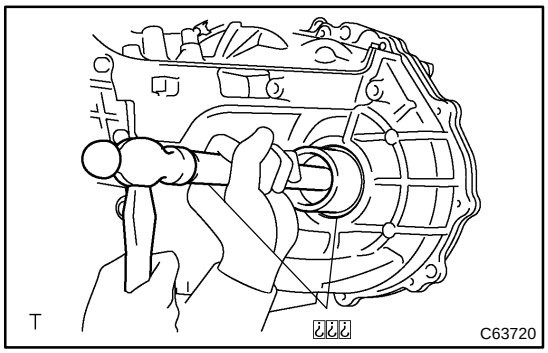

6. INSTALL TRANSAXLE CASE OIL SEAL

(a) Using SST and a hammer, drive in a new oil seal.

SST 09726–27012 (09726–02041), 09950–70010 (09951–07200)

Oil seal drive in depth:

2.7 ± 0.5 mm (0.106 ± 0.020 in.)

(b) Coat the lip of the oil seal with MP grease.

7. INSTALL FRONT DRIVE SHAFT ASSY LH (See page 30–15)

8. INSTALL ENGINE UNDER COVER LH

9. INSTALL FRONT WHEELS

Torque: 103 N·m (1,050 kgf·cm, 76 ft·lbf)

10. ADD AUTOMATIC TRANSAXLE FLUID

11. INSPECT AUTOMATIC TRANSAXLE FLUID (See page 30–15)

12. INSPECT AND ADJUST FRONT WHEEL ALIGNMENT (See page 26–6)

13. CHECK ABS SPEED SENSOR SIGNAL (See page 05–316)

14. REMOVE ENGINE ASSEMBLY WITH TRANSAXLE (See page 14–30)

15. REMOVE FRONT DRIVE SHAFT ASSY RH (See page 30–15)

16. REMOVE TRANSFER ASSY (See page 31–11)

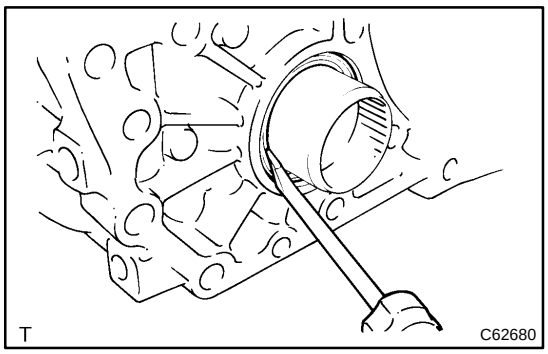

17. REMOVE FRONT TRANSAXLE CASE OIL SEAL

(a) Using a screwdriver, remove the oil seal.

NOTICE:

Be careful not to damage the housing.

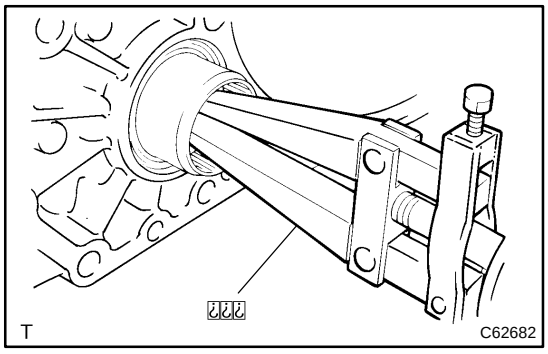

18. REMOVE FRONT DIFFERENTIAL CASE OIL SEAL

(a) Using SST, pull out the oil seal.

SST 09308–00010

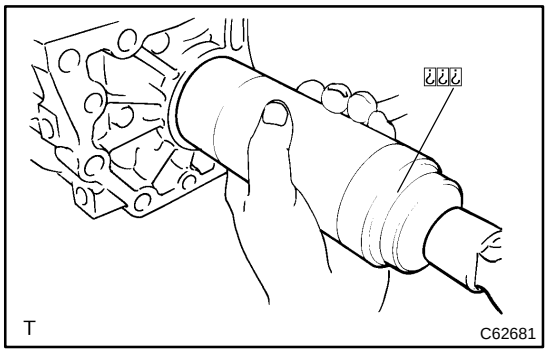

19. INSTALL FRONT TRANSAXLE CASE OIL SEAL

(a) Using SST and a hammer, drive in a new oil seal.

SST 09309–37010

Oil seal drive in depth:

4.0 ± 0.5 mm (0.157 ± 0.020 in.)

(b) Coat the lip of the oil seal with MP grease.

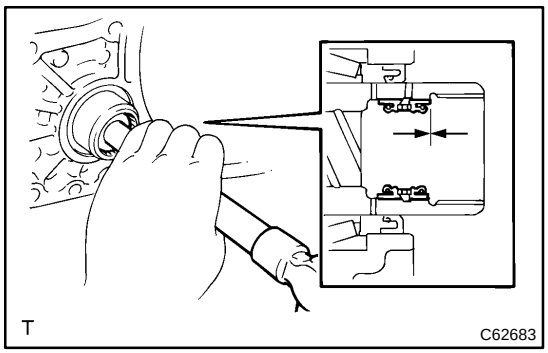

20. INSTALL FRONT DIFFERENTIAL CASE OIL SEAL

(a) Using SST and a hammer, drive in a new oil seal.

SST 09950–60010 (09951–00390), 09950–70010 (09951–07200)

Oil seal drive in depth:

0 ± 0.5 mm (0 ± 0.020 in.)

(b) Coat the lip of the oil seal with MP grease.

21. INSTALL TRANSFER ASSY (See page 31–11)

22. INSTALL FRONT DRIVE SHAFT ASSY RH (See page 30–15)

23. INSTALL ENGINE ASSEMBLY WITH TRANSAXLE (See page 14–30)

FRONT DIFFERENTIAL OIL SEAL (U240E)

400N7–01

REPLACEMENT

1. REMOVE FRONT WHEELS
2. REMOVE ENGINE UNDER COVER RH
3. REMOVE ENGINE UNDER COVER LH
4. DRAIN AUTOMATIC TRANSAXLE FLUID
(a) Remove the drain plug and gasket, and drain ATF.
(b) Install a new gasket and drain plug.
Torque: 49 N·m (500 kgf·cm, 36 ft·lbf)
5. REMOVE FRONT DRIVE SHAFT ASSY RH (See page 30–32)
6. REMOVE FRONT DRIVE SHAFT ASSY LH (See page 30–32)

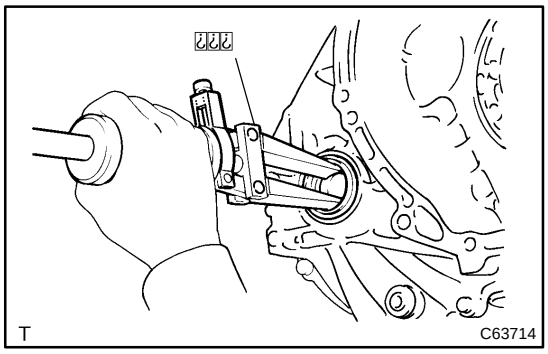

7. REMOVE TRANSAXLE HOUSING OIL SEAL(RH)
(a) Using SST, pull out the oil seal.
SST 09308–00010

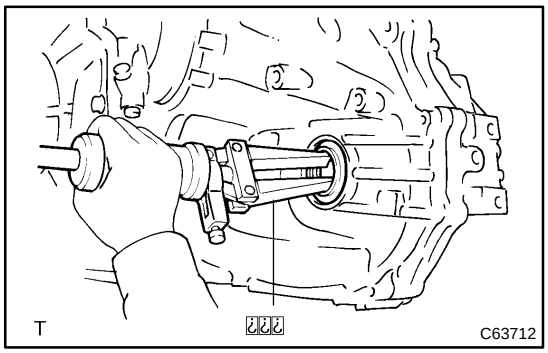

8. REMOVE DIFFERENTIAL SIDE BEARING RETAINER OIL SEAL(LH)
(a) Using SST, pull out the oil seal.
SST 09308–00010

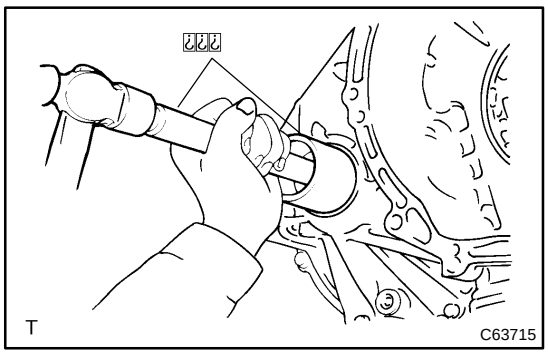

9. INSTALL TRANSAXLE HOUSING OIL SEAL(RH)
(a) Using SST and a hammer, drive in a new oil seal.
SST 09554–14010, 09950–70010 (09951–07200)
Oil seal drive in depth:
0 ± 0.5 mm (0 ± 0.020 in.)
(b) Coat the lip of the oil seal with MP grease.

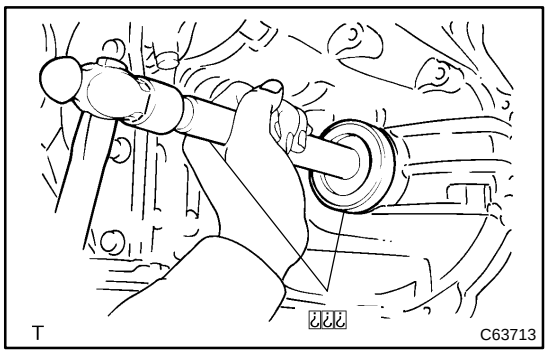

10. INSTALL DIFFERENTIAL SIDE BEARING RETAINER OIL SEAL(LH)

(a) Using SST and a hammer, drive in a new oil seal.
SST 09726–27012 (09726–02041), 09950–70010 (09951–07200)
Oil seal drive in depth:
2.7 ± 0.5 mm (0.106 ± 0.020 in.)

(b) Coat the lip of the oil seal with MP grease.

11. INSTALL FRONT DRIVE SHAFT ASSY LH (See page 30–32)
12. INSTALL FRONT DRIVE SHAFT ASSY RH (See page 30–32)
13. INSTALL ENGINE UNDER COVER LH
14. INSTALL ENGINE UNDER COVER RH
15. INSTALL FRONT WHEELS
Torque: 103 N·m (1,050 kgf·cm, 76 ft·lbf)
16. ADD AUTOMATIC TRANSAXLE FLUID
17. INSPECT AUTOMATIC TRANSAXLE FLUID (See page 40–2)
18. INSPECT AND ADJUST FRONT WHEEL ALIGNMENT (See page 26–6)
19. CHECK ABS SPEED SENSOR SIGNAL (See page 05–316)

AUTOMATIC TRANSAXLE ASSY (U341F)

COMPONENTS

400MU–01

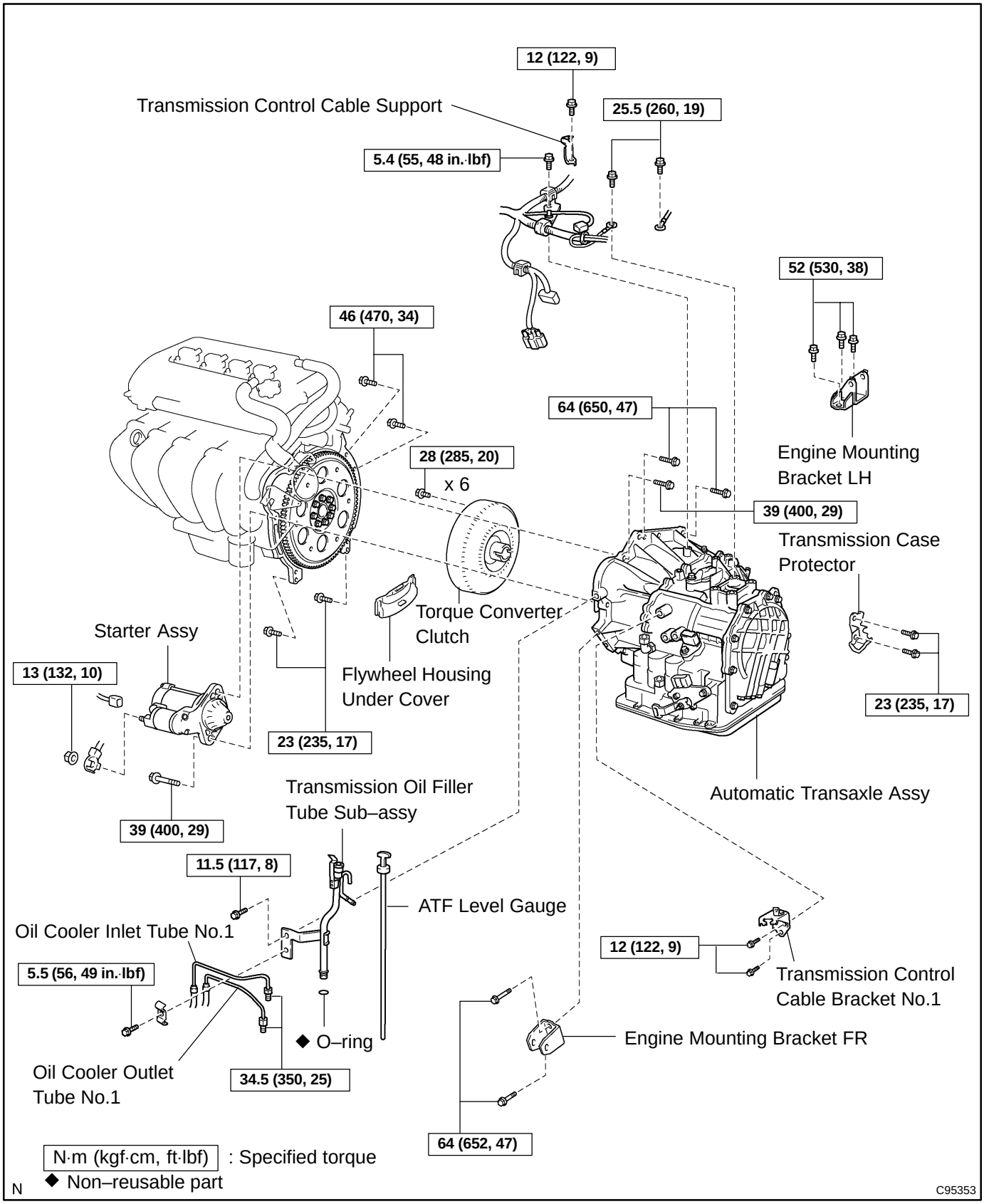

400MV–01

REPLACEMENT

1. REMOVE ENGINE ASSEMBLY WITH TRANSAXLE (See page 14–30)

2. REMOVE TRANSFER ASSY (See page 31–11)

3. REMOVE AUTOMATIC TRANSMISSION CASE PROTECTOR

(a) Remove the 2 bolts and case protector.

4. REMOVE FRONT DRIVE SHAFT ASSY LH (See page 30–15)

SST 09520–01010, 09520–24010 (09520–32040)

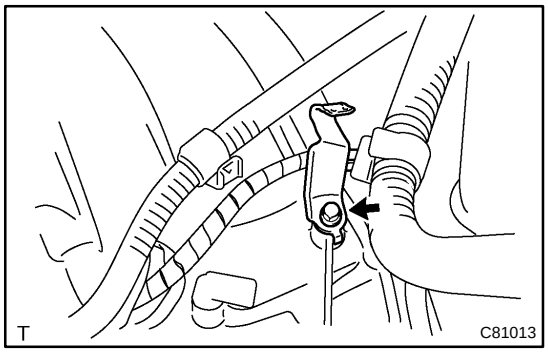

5. REMOVE TRANSMISSION CONTROL CABLE SUPPORT

(a) Remove the bolt and control cable support.

6. REMOVE TRANSMISSION CONTROL CABLE BRACKET NO.1

(a) Remove the 2 bolts and control cable bracket.

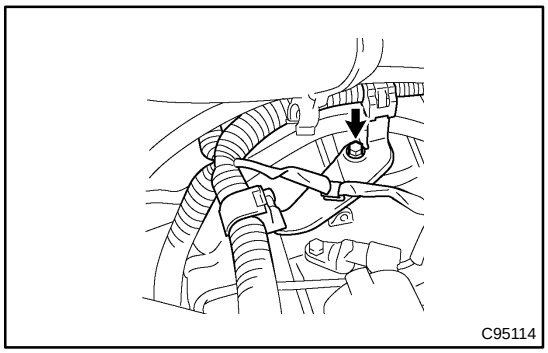

7. DISCONNECT WIRE HARNESS

(a) Remove the bolt and disconnect the wire harness clamp bracket.

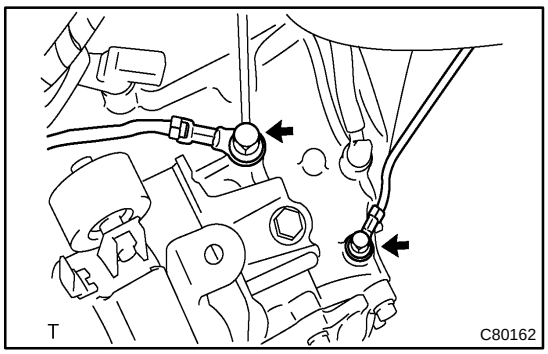

(b) Remove the 2 bolts and disconnect the 2 wire harnesses.

8. DISCONNECT CONNECTOR

(a) Disconnect the transmission wire connector.

(b) Disconnect the park/neutral position switch connector.

(c) Disconnect the transmission revolution sensor connector.

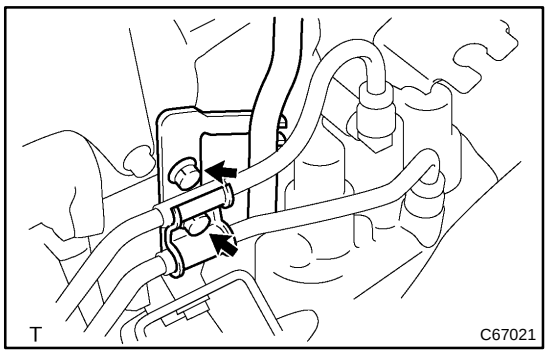

9. REMOVE TRANSMISSION OIL FILLER TUBE SUB–ASSY

(a) Remove the ATF lever gauge.

(b) Remove the 2 bolts, oil cooler tube clamp and oil filler tube.

(c) Remove the O–ring from the oil filler tube.

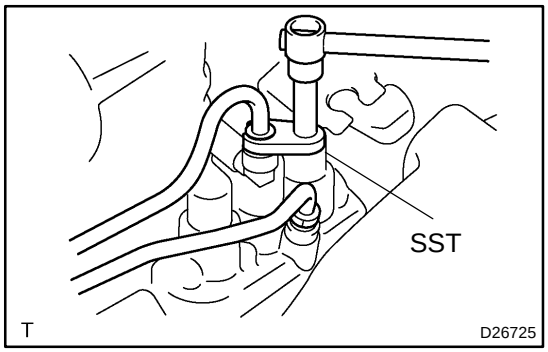

10. REMOVE OIL COOLER INLET TUBE NO.1

(a) Using SST, disconnect the oil cooler inlet tube No. 1.
SST 09023–12700

11. REMOVE OIL COOLER OUTLET TUBE NO.1

(a) Using SST,disconnect the oil cooler outlet tube No. 1.
SST 09023–12700

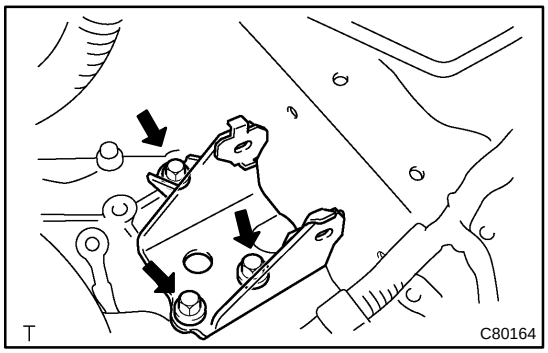

12. REMOVE TRANSVERSE ENGINE ENGINE MOUNTING BRACKET

(a) Remove the 3 bolts and engine mounting bracket LH from the automatic transaxle.

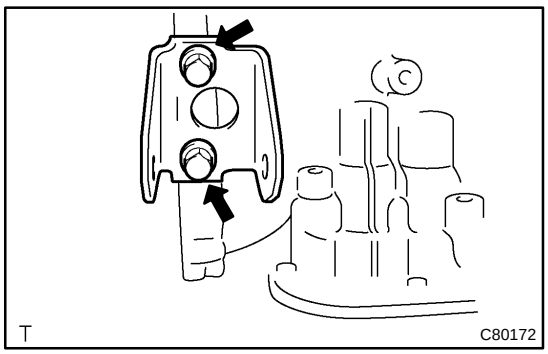

13. REMOVE TRANSVERSE ENGINE ENGINE MOUNTING BRACKET

(a) Remove the 2 bolts and engine mounting bracket FR from the automatic transaxle.

14. REMOVE FLYWHEEL HOUSING UNDER COVER

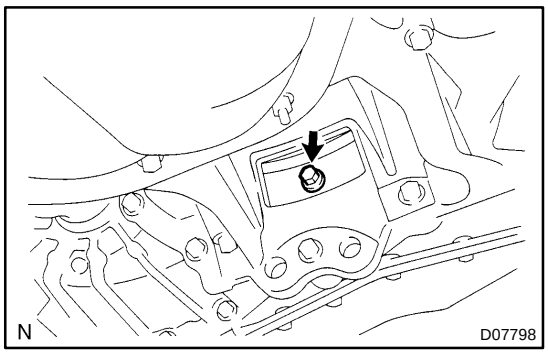

15. REMOVE AUTOMATIC TRANSAXLE ASSY

(a) Turn the crankshaft to gain access and remove the 6 bolts while holding the crankshaft pulley bolt with a wrench.

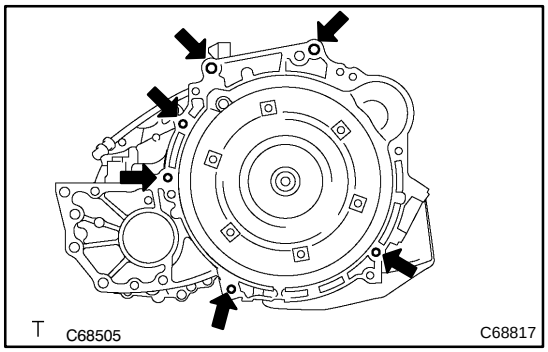

(b) Remove the 6 bolts.

(c) Remove the automatic transaxle from the engine.

16. REMOVE TORQUE CONVERTER CLUTCH ASSY

17. INSPECT TORQUE CONVERTER CLUTCH ASSY (See page 40–43)

SST 09350–32014 (09351–32010, 09351–32020)

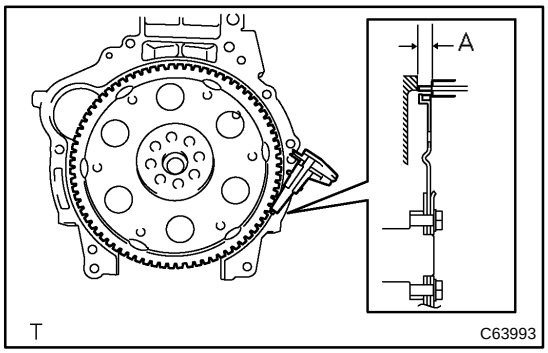

18. INSTALL TORQUE CONVERTER CLUTCH ASSY

(a) Using vernier calipers, measure the dimension ”A” between the transaxle fitting part and the converter fitting part of the drive plate.

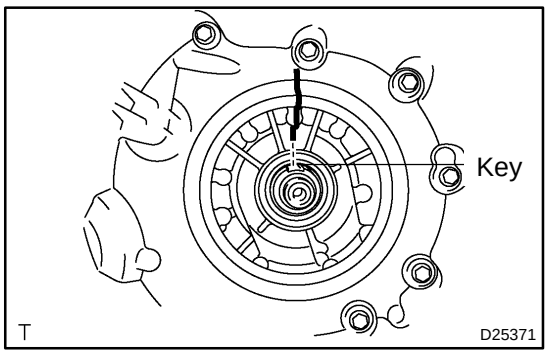

(b) Set the key of the front oil pump drive gear at the top and put a mark on the housing.

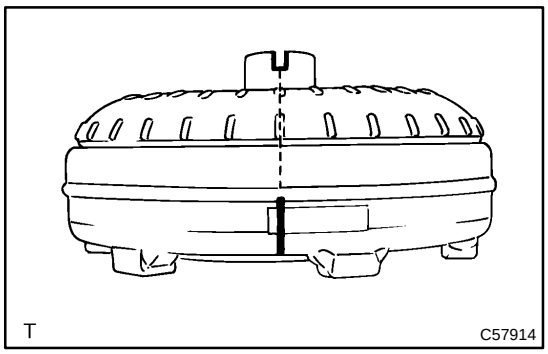

(c) Put a mark on the torque converter so that its groove can be clearly indicated.

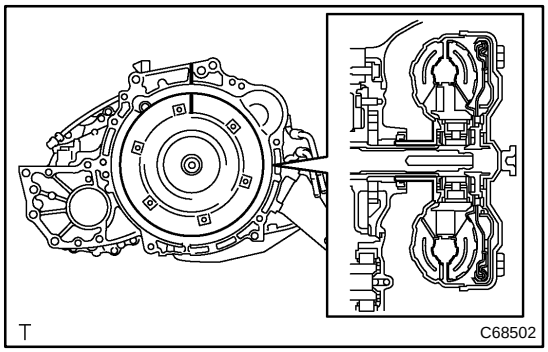

(d) Match the 2 marks on the case and the converter and fit the splined part of the input shaft to the spline part of the turbine runner.

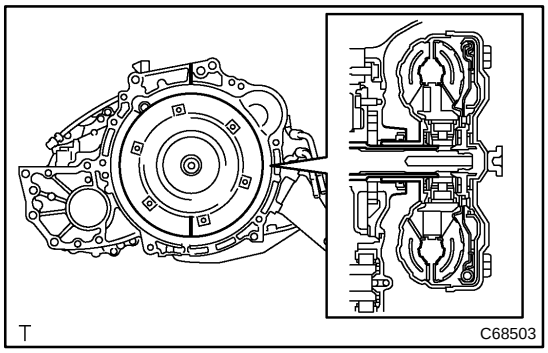

(e) Rotating the converter, fit the spline part of the stator shaft with the spline part of the stator.

HINT:

Rotate it about 180 degrees.

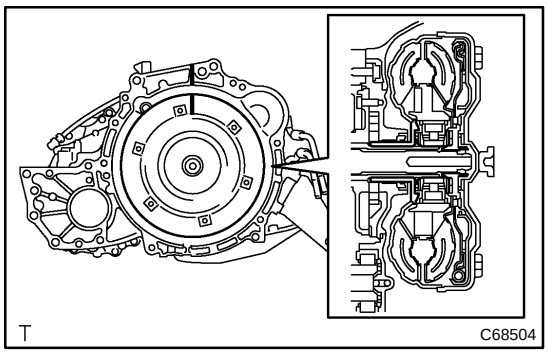

(f) Rotating the converter, match the 2 marks on the case and the converter again and fit the key of the oil pump drive gear into the key way of the converter.

NOTICE:

When rotating the converter, do not push it by excessive force.

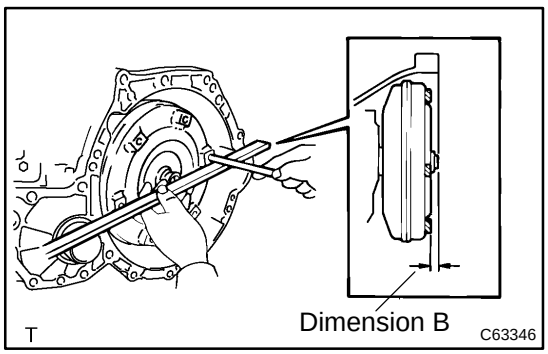

(g) Using vernier calipers and a straight edge, measure the dimension ”B” shown in the illustration and check that ”B” is greater than ”A” measured in (a).

Standard: A + 1 mm or more

NOTICE:

Do not add the thickness of straight edge.

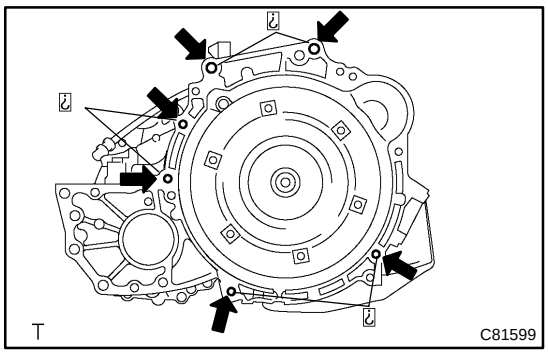

19. INSTALL AUTOMATIC TRANSAXLE ASSY

(a) Install the automatic transaxle to the engine with the 6 bolts.

Torque:
Bolt A: 64 N·m (653 kgf·cm, 47 ft·lbf)
Bolt B: 46 N·m (469 kgf·cm, 34 ft·lbf)
Bolt C: 23 N·m (235 kgf·cm, 17 ft·lbf)

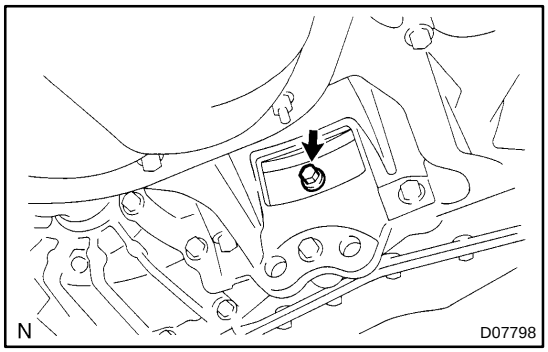

(b) Install the 6 torque converter mounting bolts.
Torque: 28 N·m (285 kgf·cm, 20 ft·lbf)

HINT:
First install yellowish green colored bolt and then the 5 bolts.

20. INSTALL FLYWHEEL HOUSING UNDER COVER

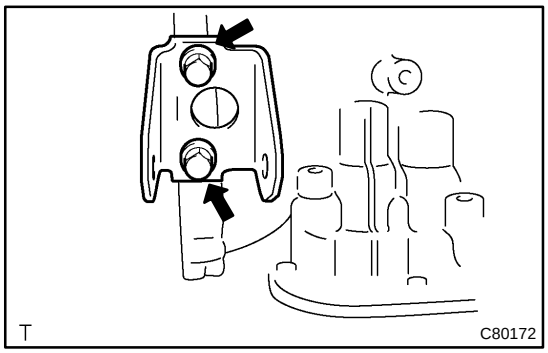

21. INSTALL TRANSVERSE ENGINE ENGINE MOUNTING BRACKET

(a) Install the engine mounting bracket FR to the automatic transaxle with the 2 bolts .
Torque: 64 N·m (652 kgf·cm, 47 ft·lbf)

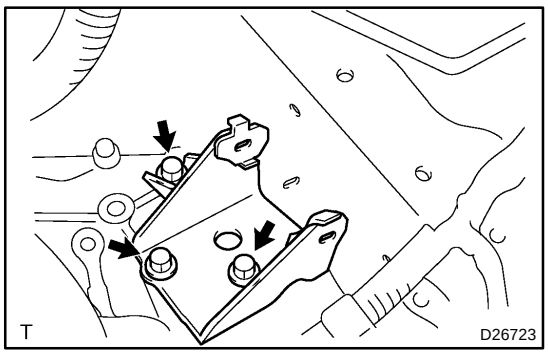

22. INSTALL TRANSVERSE ENGINE ENGINE MOUNTING BRACKET

(a) Install the engine mounting bracket LH to the automatic transaxle with the 3 bolts .
Torque: 52 N·m (530 kgf·cm, 38 ft·lbf)

23. INSTALL TRANSMISSION OIL FILLER TUBE SUB–ASSY

(a) Temporarily install the oil cooler outlet tube No. 1.
(b) Temporarily install the oil cooler inlet tube No. 1.
(c) Coat a new O–ring with ATF, and install them to the oil filler tube.
(d) Install the oil filler tube to the automatic transaxle.

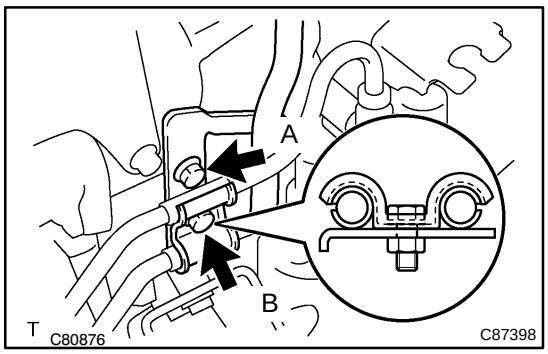

(e) Install the oil cooler tube clamp and 2 bolts.
Torque:
Bolt A: 11.5 N·m (117 kgf·cm, 8 ft·lbf)
Bolt B: 5.5 N·m (56 kgf·cm, 49 in.·lbf)

(f) Install the ATF lever gauge.

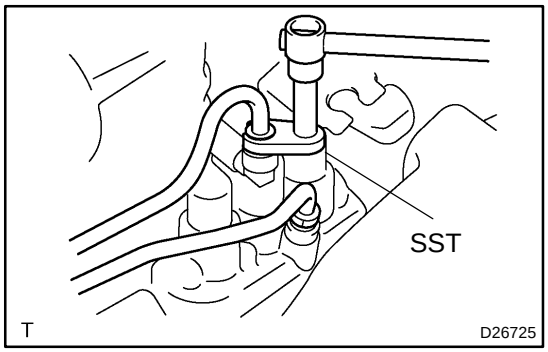

24. INSTALL OIL COOLER INLET TUBE NO.1

(a) Using SST, tighten the oil cooler inlet tube No. 1.
SST 09023–12700
Torque: 34.5 N·m (350 kgf·cm, 25 ft·lbf)

25. INSTALL OIL COOLER OUTLET TUBE NO.1

(a) Using SST, tighten the oil cooler outlet tube No. 1.
SST 09023–12700
Torque: 34.5 N·m (350 kgf·cm, 25 ft·lbf)

26. CONNECT CONNECTOR

(a) Connect the transmission wire connector.

(b) Connect the park/neutral position switch connector.

(c) Connect the transmission revolution sensor connector.

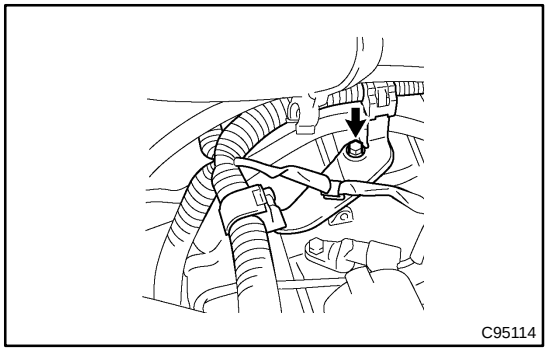

27. INSTALL WIRE HARNESS

(a) Install the wire harness clamp bracket and bolt.
Torque: 5.4 N·m (55 kgf·cm, 48 in.·lbf)

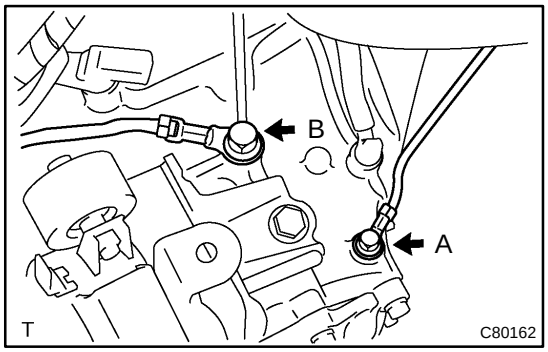

(b) Install the 2 wire harness with the 2 bolts.
Torque:
Bolt A: 10 N·m (102 kgf·cm, 7 ft·lbf)
Bolt B: 26 N·m (265 kgf·cm, 19 ft·lbf)

28. INSTALL TRANSMISSION CONTROL CABLE BRACKET NO.1

(a) Install the control cable bracket with the 2 bolts.
Torque: 12 N·m (122 kgf·cm, 9 ft·lbf)

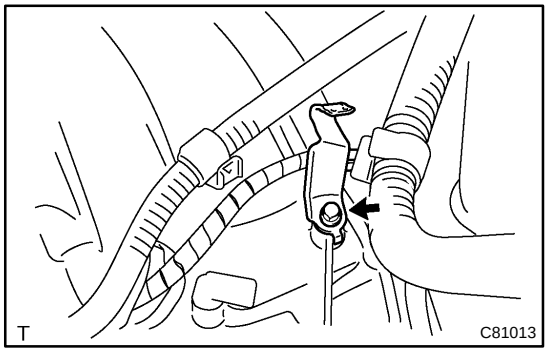

29. INSTALL TRANSMISSION CONTROL CABLE SUPPORT

(a) Install the control cable support with the bolt.
Torque: 12 N·m (122 kgf·cm, 9 ft·lbf)

(b) Connect the control cable to the control cable support.

30. INSTALL FRONT DRIVE SHAFT ASSY LH (See page 30–15)

31. INSTALL AUTOMATIC TRANSMISSION CASE PROTECTOR

(a) Install the case protector with the 2 bolts.
Torque: 23 N·m (235 kgf·cm, 17 ft·lbf)

32. INSTALL TRANSFER ASSY (See page 31–11)

33. INSTALL ENGINE ASSEMBLY WITH TRANSAXLE (See page 14–30)

TRANSMISSION VALVE BODY ASSY (U341F)

400N2–01

REPLACEMENT

1. REMOVE ENGINE UNDER COVER LH

2. DRAIN AUTOMATIC TRANSAXLE FLUID

(a) Remove the drain plug and gasket, and drain ATF.

(b) Install a new gasket and drain plug.

Torque: 49 N·m (500 kgf·cm, 36 ft·lbf)

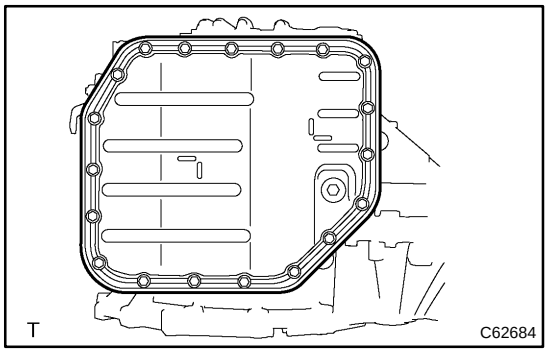

3. REMOVE AUTOMATIC TRANSAXLE OIL PAN SUB–ASSY

(a) Remove the 19 bolts, oil pan and gasket.

NOTICE:

Some fluid will remain in the oil pan. Remove all pan bolts, and carefully remove the oil pan assembly. Discard the gasket.

(b) Remove the 2 magnets from the oil pan.

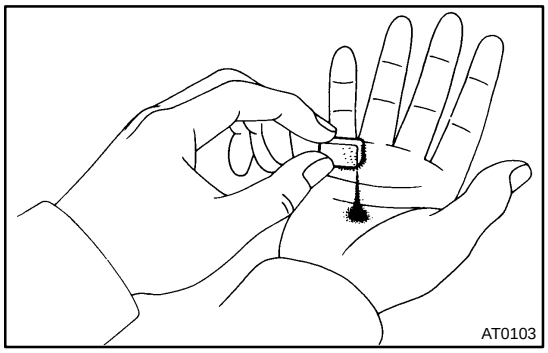

(c) Examine particles in pan.

(1) Remove the magnets and use them to collect any steel chips. Look carefully at the chips and particles in the pan and the magnet to anticipate what type of wear you will find in the transaxle.

Steel (magnetic): bearing, gear and plate wear

Brass (non–magnetic): bearing wear

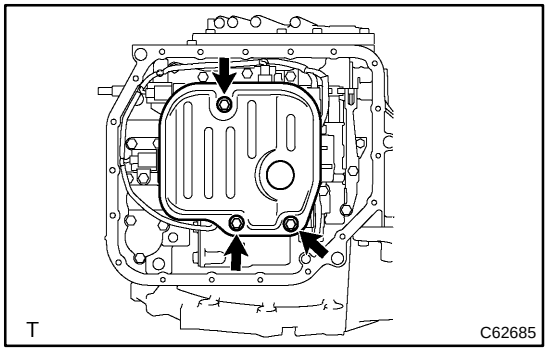

4. REMOVE VALVE BODY OIL STRAINER ASSY

(a) Remove the 3 bolts and oil strainer.

NOTICE:

Be careful as some fluid will come out with the oil strainer.

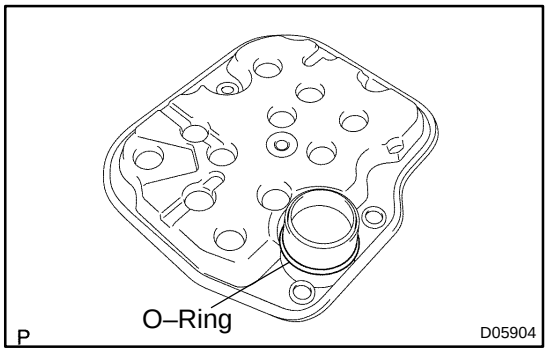

(b) Remove the O–ring from the oil strainer.

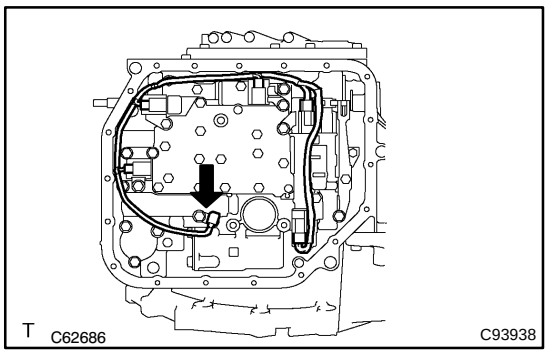

5. REMOVE TRANSMISSION VALVE BODY ASSY

(a) Disconnect the 5 connectors.

(b) Remove the bolt and lock plate, and remove the ATF temperature sensor.

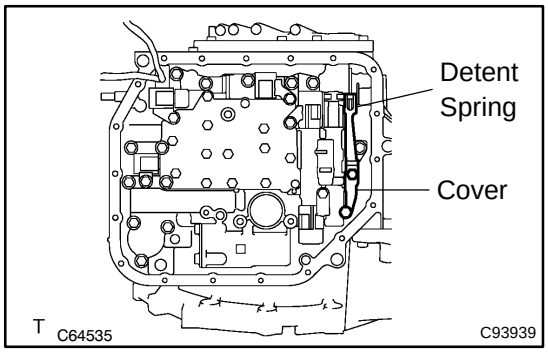

(c) Remove the 2 bolts, cover and detent spring.

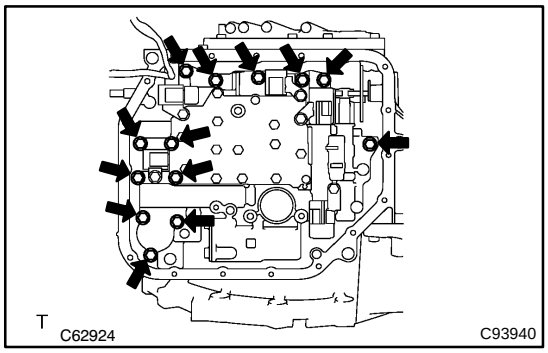

(d) Remove the 13 bolts and valve body.

NOTICE:

Be careful not to drop the check valve body, spring and accumulator piston.

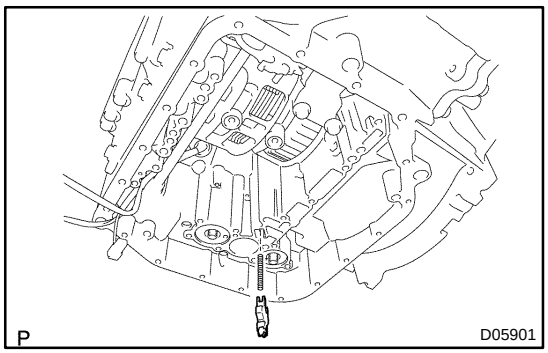

(e) Remove the check ball body and spring.

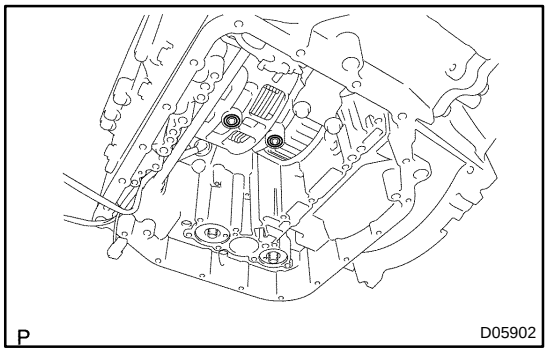

(f) Remove the 2 apply gaskets.

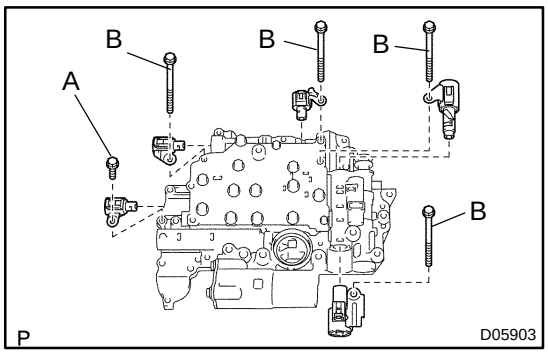

(g) Remove the 5 bolts and 5 shift solenoid valves.

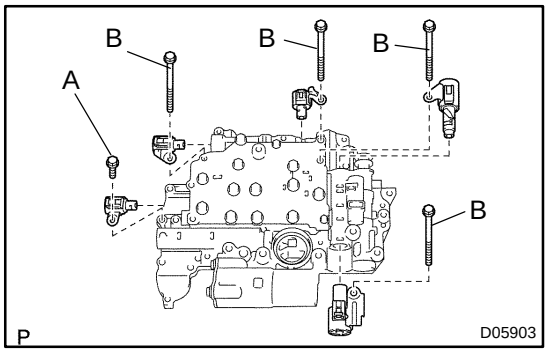

6. INSTALL TRANSMISSION VALVE BODY ASSY

(a) Install the 5 shift solenoid valves with the 5 bolts.

Torque:
Bolt A: 10.8 N·m (110 kgf·cm, 8 ft ·lbf)
Bolt B: 10.8 N·m (110 kgf·cm, 8 ft ·lbf)
Bolt length:
Bolt A: 14 mm (0.55 in.)
Bolt B: 55 mm (2.17 in.)

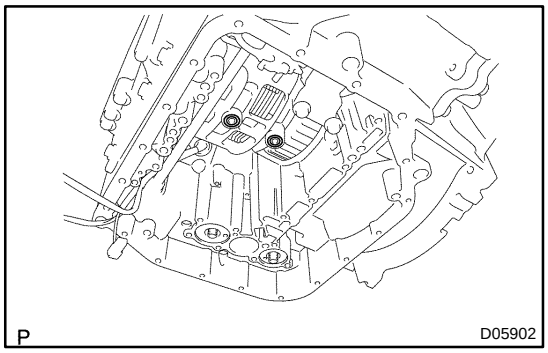

(b) Coat 2 new apply gaskets with ATF.

(c) Install the gaskets to the transaxle case.

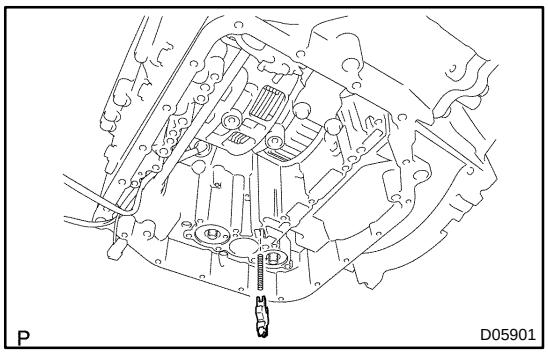

(d) Install the spring and check ball body.

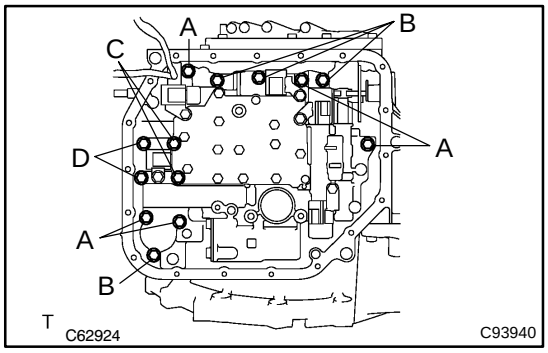

(e) Align the groove of the manual valve with the pin of the manual valve lever.

(f) Temporarily install the valve body with the 13 bolts.

Bolt length:
Bolt A: 32 mm (1.26 in.)
Bolt B: 22 mm (0.87 in.)
Bolt C: 55 mm (2.17 in.)
Bolt D: 45 mm (1.77 in.)

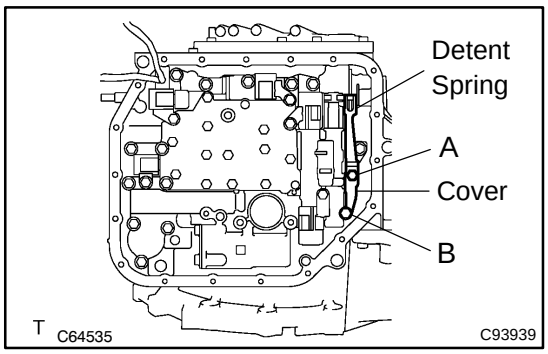

(g) Temporarily install the detent spring and cover with the 2 bolts.
Bolt length:
Bolt A: 14 mm (0.55 in.)
Bolt B: 45 mm (1.77 in.)

(h) Check that the manual valve lever contacts the center of the roller at the tip of the detent spring.

(i) Tighten the 15 bolts.
Torque: 10.8 N·m (110 kgf·cm, 8 ft·lbf)

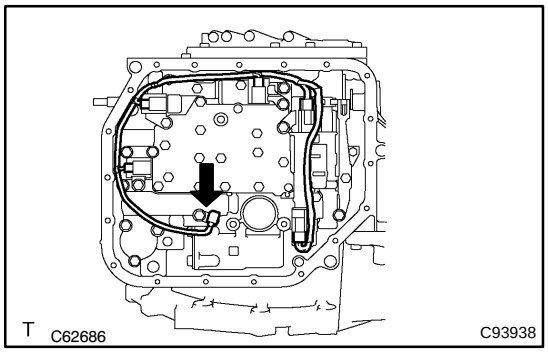

(j) Install the ATF temperature sensor with the lock plate and bolt.
Torque: 10.8 N·m (110 kgf·cm, 8 ft·lbf)

(k) Connect the 5 shift solenoid valve connectors.

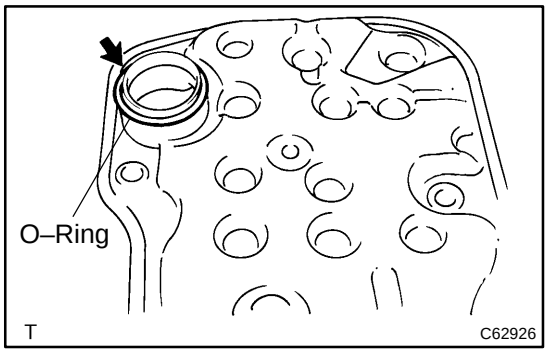

7. INSTALL VALVE BODY OIL STRAINER ASSY

(a) Coat a new O–ring with ATF.

(b) Install the O–ring to the oil strainer.

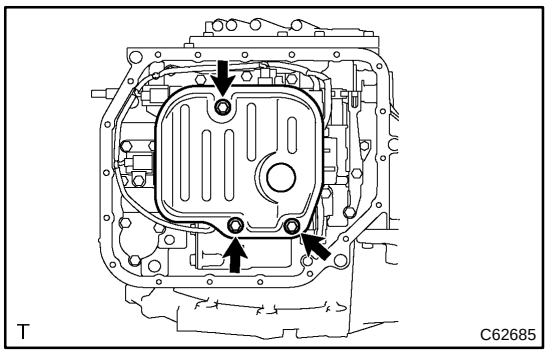

(c) Install the oil strainer with the 3 bolts.
Torque: 10.8 N·m (110 kgf·cm, 8 ft·lbf)

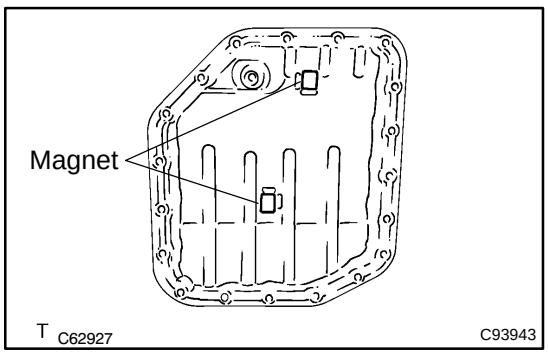

8. INSTALL AUTOMATIC TRANSAXLE OIL PAN SUB–ASSY

(a) Install the 2 magnets in the oil pan, as shown in the illustration.

(b) Install a new gasket to the oil pan.

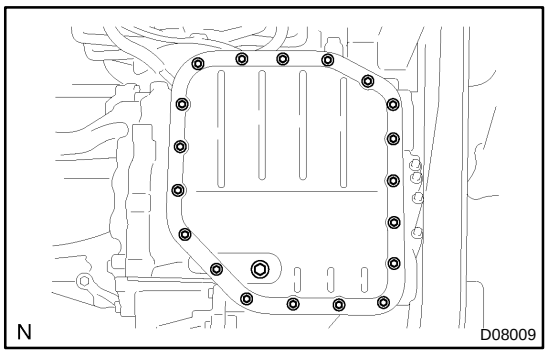

(c) Install the oil pan and a new gasket with the 19 bolts.
Torque: 7.8 N·m (80 kgf·cm, 69 in.·lbf)

9. INSTALL ENGINE UNDER COVER LH
10. ADD AUTOMATIC TRANSAXLE FLUID
11. INSPECT AUTOMATIC TRANSAXLE FLUID (See page 40–2)

TRANSMISSION WIRE (U240E)

400N4–01

REPLACEMENT

1. REMOVE ENGINE UNDER COVER LH

2. DRAIN AUTOMATIC TRANSAXLE FLUID

(a) Remove the drain plug and gasket, and drain ATF.

(b) Install a new gasket and drain plug.

Torque: 49 N·m (500 kgf·cm, 36 ft·lbf)

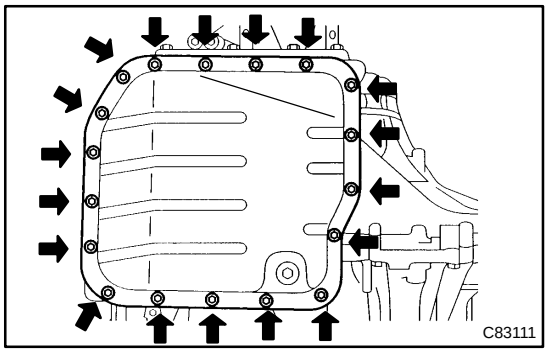

3. REMOVE AUTOMATIC TRANSAXLE OIL PAN SUB–ASSY

(a) Remove the 18 bolts, oil pan and gasket.

NOTICE:

Some fluid will remain in the oil pan. Remove all pan bolts, and carefully remove the oil pan assembly.

(b) Remove the 2 magnets from the oil pan.

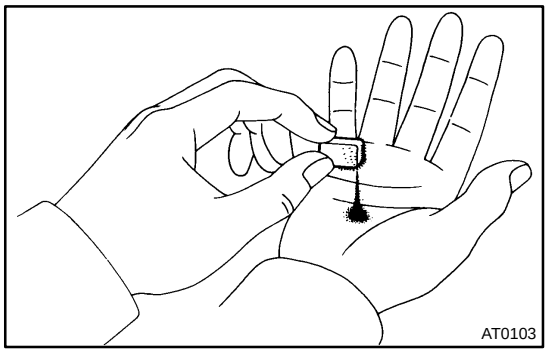

(c) Examine particles in pan.

(1) Remove the magnets and use them to collect any steel chips. Look carefully at the chips and particles in the pan and the magnet to anticipate what type of wear you will find in the transaxle.

Steel (magnetic): bearing, gear and plate wear

Brass (non–magnetic): bearing wear

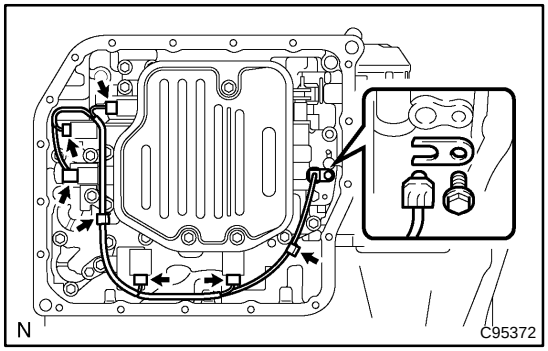

4. DISCONNECT TRANSMISSION WIRE

(a) Disconnect the 5 shift solenoid valve connectors.

(b) Remove the bolt and lock plate, and disconnect the ATF temperature sensor.

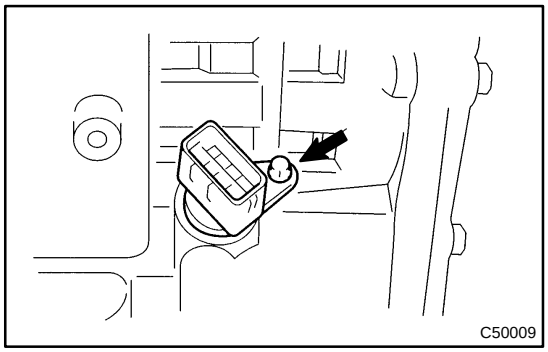

5. REMOVE TRANSMISSION WIRE

(a) Disconnect the transmission wire connector.

(b) Remove the bolt and transmission wire.

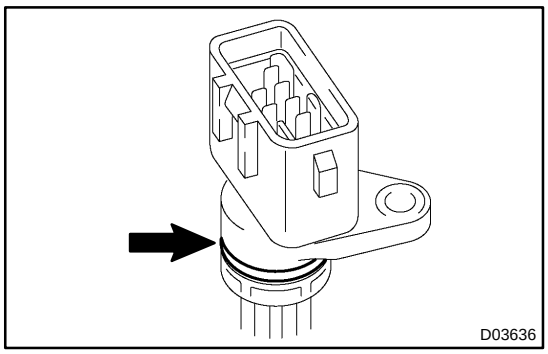

6. INSTALL TRANSMISSION WIRE

(a) Coat a O–ring of the transmission wire connector with ATF.

(b) Install the transmission wire.

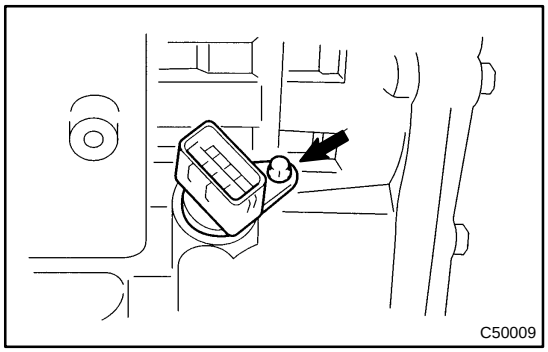

(c) Install the bolt.
Torque: 5.4 N·m (55 kgf·cm, 48 in.·lbf)

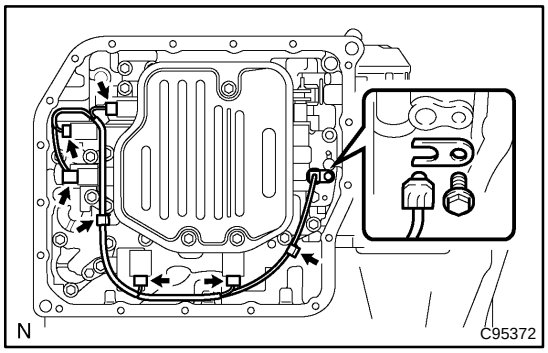

7. CONNECT TRANSMISSION WIRE

(a) Coat a O–ring of the ATF temperature sensor with ATF.

(b) Install the ATF temperature sensor with the lock plate and bolt.
Torque: 6.6 N·m (67 kgf·cm, 58 in.·lbf)

(c) Connect the 5 shift solenoid valve connectors.

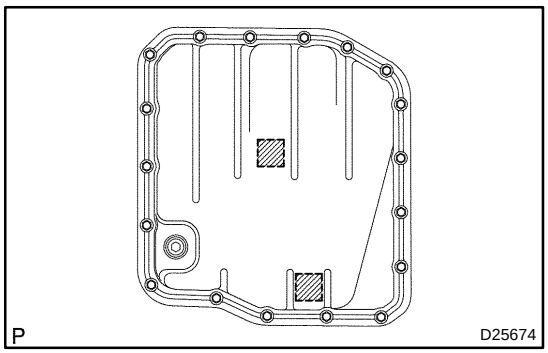

8. INSTALL AUTOMATIC TRANSAXLE OIL PAN SUB–ASSY

(a) Install the 2 magnets in the oil pan.

(b) Apply seal packing or equivalent to 18 bolts.
Seal packing:
THREE BOND 2430 or equivalent

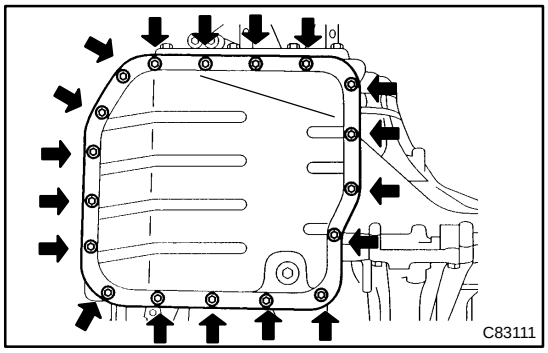

(c) Install a new gasket, oil pan and 18 bolts to the transaxle case.
Torque: 7.8 N·m (80 kgf·cm, 69 in.·lbf)

NOTICE:

Because the bolts should be seal bolts, apply seal packing to bolts and tighten them within 10 minutes after application.

9. INSTALL ENGINE UNDER COVER LH

10. ADD AUTOMATIC TRANSAXLE FLUID

11. INSPECT AUTOMATIC TRANSAXLE FLUID (See page 40–2)

TRANSMISSION WIRE (U341F)

400N5–01

REPLACEMENT

1. REMOVE TRANSMISSION VALVE BODY ASSY (See page 40–58)

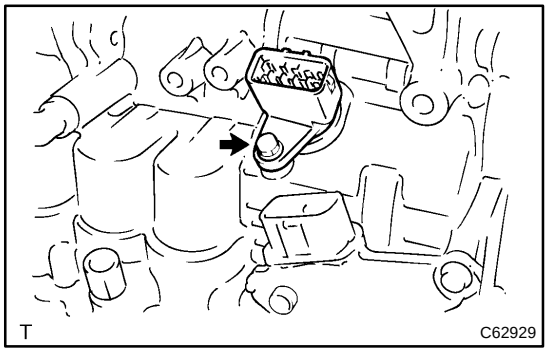

2. REMOVE TRANSMISSION WIRE

(a) Removal the bolt and transmission wire.

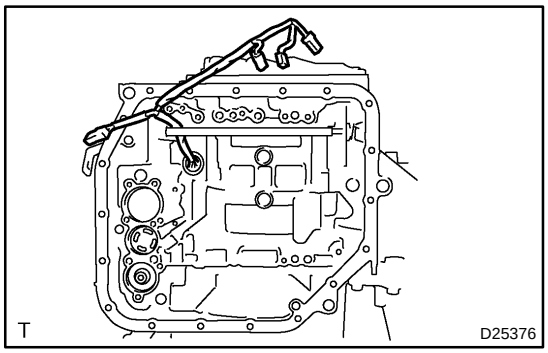

3. INSTALL TRANSMISSION WIRE

(a) Coat a O–ring with ATF.

(b) Install the transmission wire.

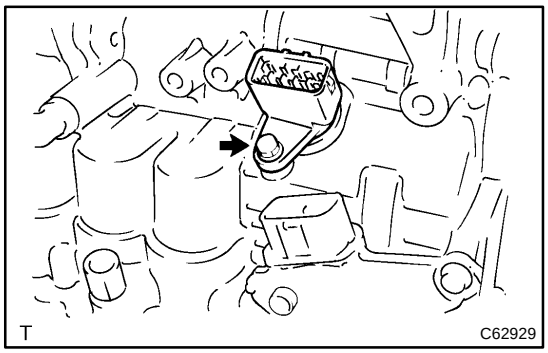

(c) Install the bolt.

Torque: 5.4 N·m (55 kgf·cm, 48 in.·lbf)

4. INSTALL TRANSMISSION VALVE BODY ASSY (See page 40–58)

TRANSMISSION REVOLUTION SENSOR (U240E)

400MY–01

REPLACEMENT

1. REMOVE BATTERY

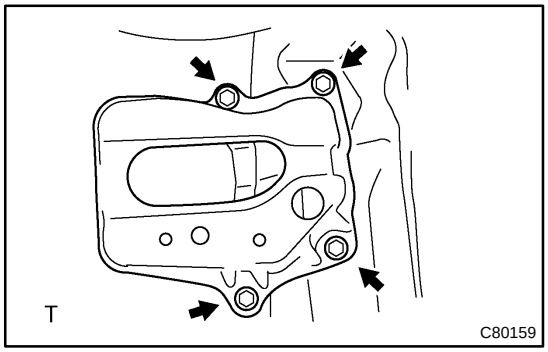

2. REMOVE BATTERY CARRIER

(a) Remove the 4 bolts and battery carrier.

3. REMOVE AIR CLEANER ASSEMBLY WITH HOSE

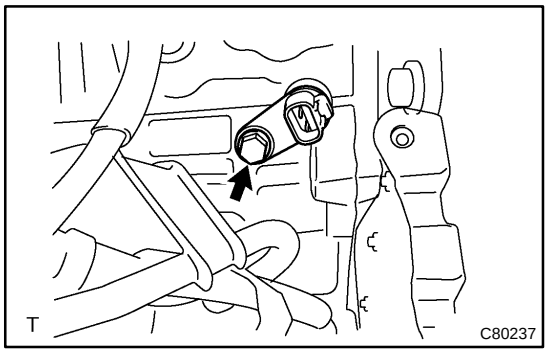

4. REMOVE TRANSMISSION REVOLUTION SENSOR (NT SENSOR)

(a) Disconnect the transmission revolution sensor connector.
(b) Remove the bolt and transmission revolution sensor.

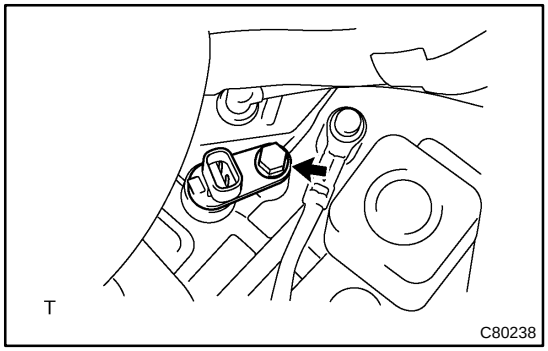

5. REMOVE TRANSMISSION REVOLUTION SENSOR (NC SENSOR)

(a) Disconnect the transmission revolution sensor connector.
(b) Remove the bolt and transmission revolution sensor.

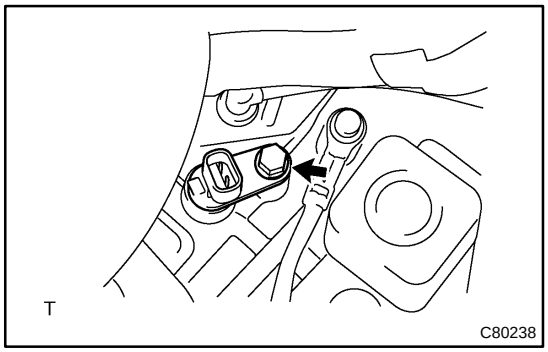

6. INSTALL TRANSMISSION REVOLUTION SENSOR (NC SENSOR)

(a) Coat an O–ring with ATF.
(b) Install the transmission revolution sensor with the bolt.
Torque: 11.3 N·m (115 kgf·cm, 8 ft·lbf)

HINT:
Make sure of the manufacturer’s name.

(c) Connect the transmission revolution sensor connector.

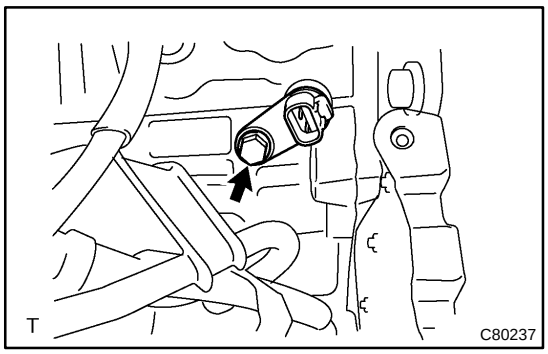

7. INSTALL TRANSMISSION REVOLUTION SENSOR (NT SENSOR)

(a) Coat an O–ring with ATF.

(b) Install the transmission revolution sensor with the bolt.
Torque: 11.3 N·m (115 kgf·cm, 8 ft·lbf)

HINT:

Make sure of the manufacturer's name.

(c) Connect the transmission revolution sensor connector.

8. INSTALL AIR CLEANER ASSEMBLY WITH HOSE
Torque: 7.0 N·m (71 kgf·cm, 62 in.·lbf)

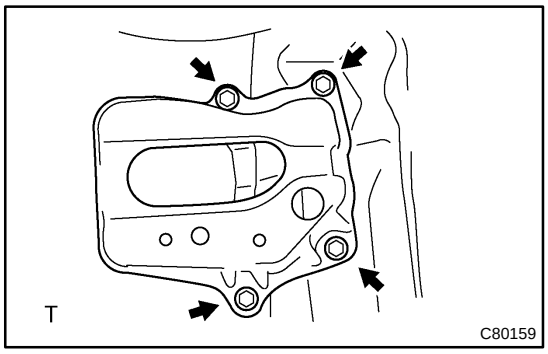

9. INSTALL BATTERY CARRIER

(a) Install the battery carrier and 4 bolts.
Torque: 13 N·m (132 kgf·cm, 10 ft·lbf)

FRONT DIFFERENTIAL OIL SEAL (A246E)

400N6–01

REPLACEMENT

1. REMOVE FRONT WHEELS
2. REMOVE ENGINE UNDER COVER RH
3. REMOVE ENGINE UNDER COVER LH
4. DRAIN AUTOMATIC TRANSAXLE FLUID
(a) Remove the drain plug, gasket and drain ATF.
(b) Install a new gasket and drain plug.
Torque: 17.5 N·m (178 kgf·cm, 13 ft·lbf)
5. REMOVE FRONT DRIVE SHAFT ASSY RH (See page 30–15)
6. REMOVE FRONT DRIVE SHAFT ASSY LH (See page 30–15)

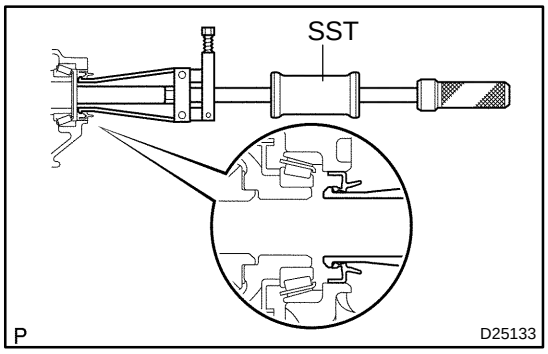

7. REMOVE TRANSAXLE HOUSING OIL SEAL(RH)
(a) Using SST, pull out the oil seal.
SST 09308–00010

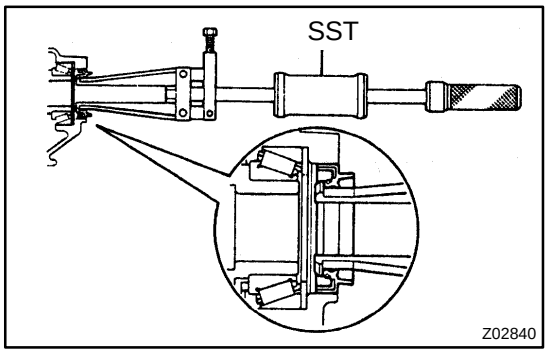

8. REMOVE TRANSAXLE CASE OIL SEAL(LH)
(a) Using SST, pull out the oil seal.
SST 09308–00010

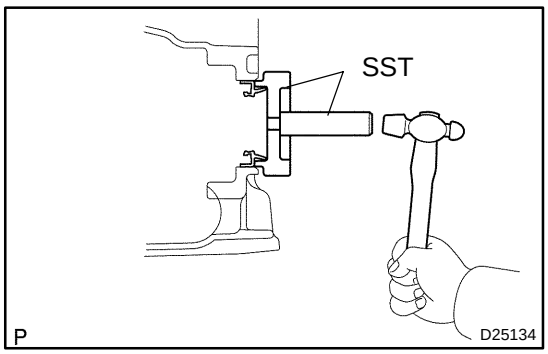

9. INSTALL TRANSAXLE HOUSING OIL SEAL(RH)
(a) Using SST and a hammer, drive in a new oil seal.
SST 09350–32014 (09351–32130, 09351–32150)
Oil seal drive in depth:
2.0 ± 0.5 mm (0.079 ± 0.020 in.)
(b) Coat the lip of the oil seal with MP grease.

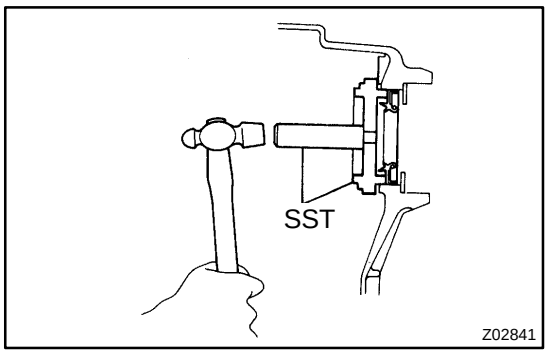

10. INSTALL TRANSAXLE CASE OIL SEAL(LH)

(a) Using SST and a hammer, drive in a new oil seal.
SST 09350–32014 (09351–32111, 09351–32130)
Oil seal drive in depth:
5.3 ± 0.5 mm (0.209 ± 0.020 in.)

(b) Coat the lip of the oil seal with MP grease.

11. INSTALL FRONT DRIVE SHAFT ASSY LH (See page 30–15)
12. INSTALL FRONT DRIVE SHAFT ASSY RH (See page 30–15)
13. INSTALL ENGINE UNDER COVER LH
14. INSTALL ENGINE UNDER COVER RH
15. INSTALL FRONT WHEELS
Torque: 103 N·m (1050 kgf·cm, 76 ft·lbf)
16. ADD AUTOMATIC TRANSAXLE FLUID
17. INSPECT AUTOMATIC TRANSAXLE FLUID (See page 40–2)
18. INSPECT AND ADJUST FRONT WHEEL ALIGNMENT (See page 26–6)
19. CHECK ABS SPEED SENSOR SIGNAL (W/ ABS) (See page 05–316)

FLOOR SHIFT PARKING LOCK CABLE ASSY (ATM)

400NG–01

REPLACEMENT

1. **REMOVE METER HOOD SUB–ASSY (See page 71–10)**
2. **REMOVE STEERING COLUMN COVER (See page 50–8)**
3. **REMOVE INSTRUMENT CLUSTER FINISH PANEL SUB–ASSY CENTER (See page 71–10)**
4. **REMOVE INSTRUMENT CLUSTER FINISH PANEL ASSY CTR (See page 71–10)**
5. **REMOVE INSTRUMENT PANEL BOX (See page 71–10)**
6. **REMOVE INSTRUMENT PANEL FINISH PANEL LOWER CENTER (See page 71–10)**

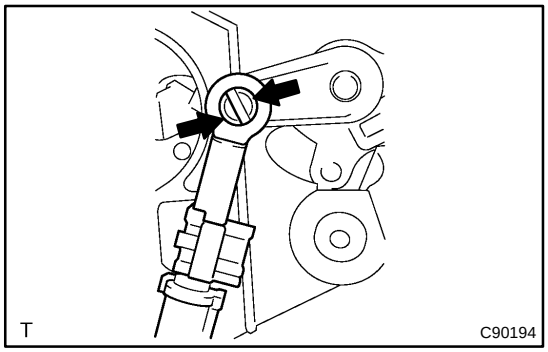

7. REMOVE FLOOR SHIFT PARKING LOCK CABLE ASSY

(a) Push the claw and disconnect the parking lock cable assy from the shift lock release link.

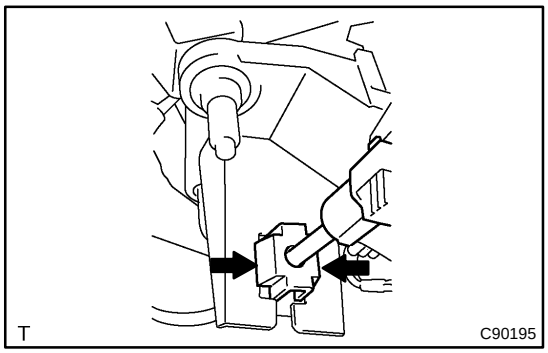

(b) Using a screw driver, disconnect the parking lock cable assy from the shift lever plate.

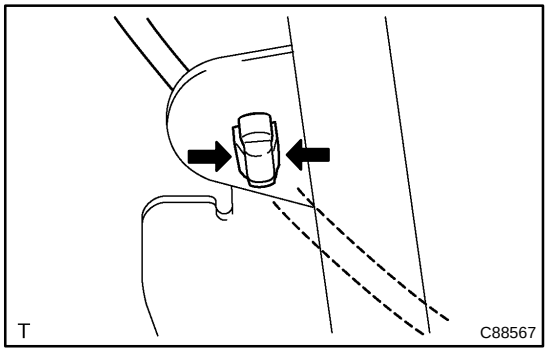

(c) Disconnect the cable clamp.

(d) Turn the ignition switch ACC or ON.

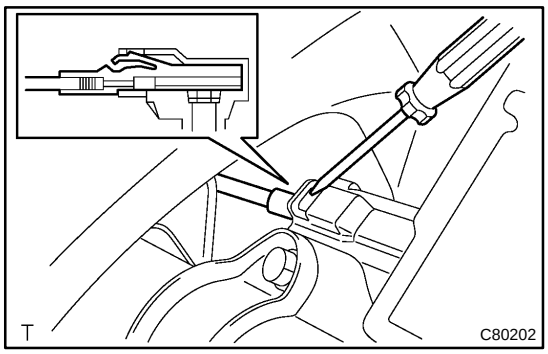

(e) Using a screwdriver, disconnect the cable from the upper bracket.

8. INSTALL FLOOR SHIFT PARKING LOCK CABLE ASSY

(a) Turn the ignition switch ACC or ON.

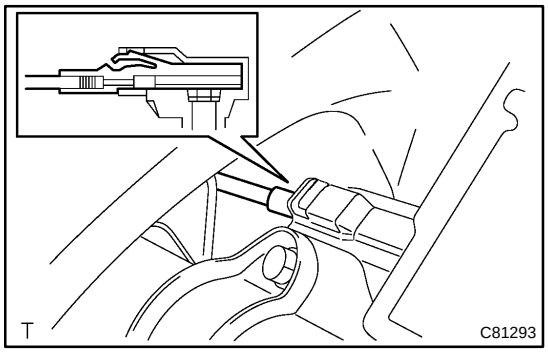

(b) Connect the cable to the upper bracket.

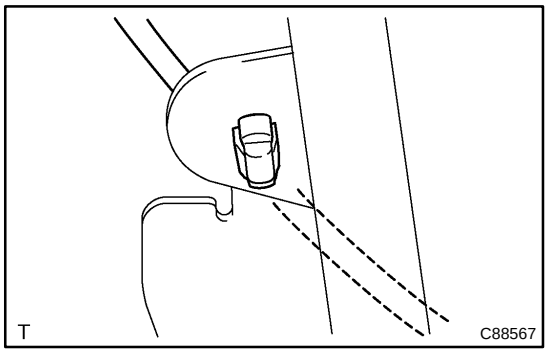

(c) Connect the cable clamp.

(d) Shift the shift lever to N position.

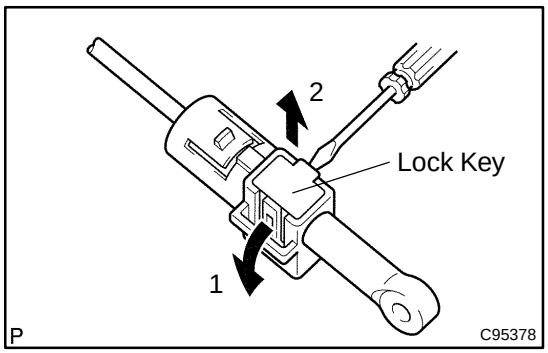

(e) Using a small screwdriver, unlock the claw of the lock key of automatic adjustment part.

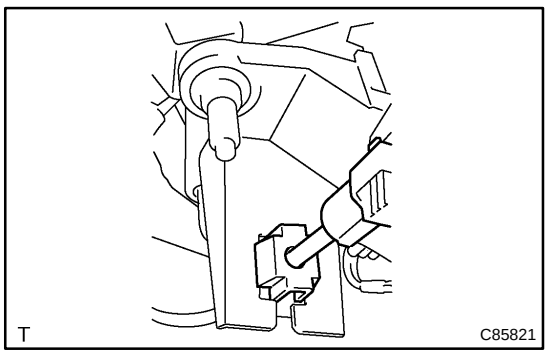

(f) Pass the parking lock cable through the hole of shift lever plate.

(g) Insert the slide cap into the shift lever plate.

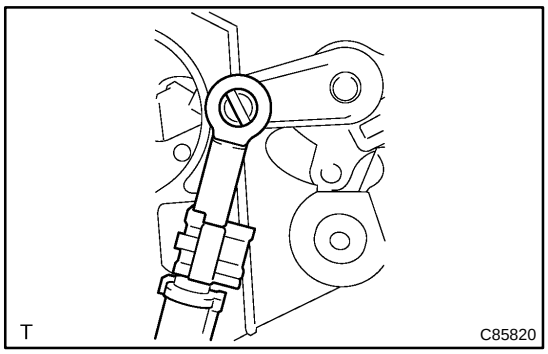

(h) Apply MP grease to the shift lock release link.
(i) Insert the lever pin into the hole in the cable end.

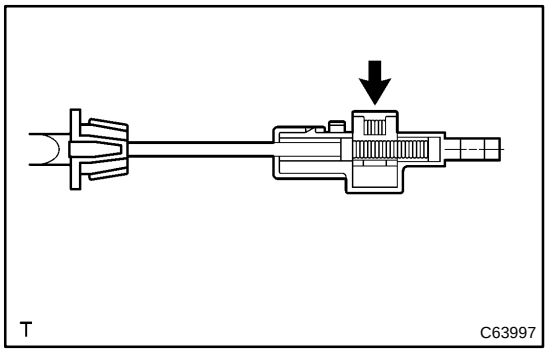

(j) Lock the lock key.

HINT:

At this time, the shift lever should be in N position and the ignition key should be set to ACC or ON.

9. CHECK KEY INTERLOCK OPERATION (See page 40–74)

AUTOMATIC TRANSAXLE ASSY (ATM)

400MM–01

PRECAUTION

1. **The automatic transaxle is composed of highly precision–finished parts, necessitating careful inspection before reassembly because even a small nick could cause fluid leakage or affect the performance. The instructions here are organized so that you work on only one component group at a time. This will help avoid confusion from similar–looking parts of different sub–assemblies being on your workbench at the same time. The component groups are inspected and repaired from the converter housing side. As much as possible, complete the inspection, repair and reassembly before proceeding to the next component group. If a defect is found in a certain component group during reassembly, inspect and repair this group immediately. If a component group cannot be assembled because parts are being ordered, be sure to keep all parts of the group in a separate container while proceeding with disassembly, inspection, repair and reassembly of other component groups.**
   Recommended ATF: T–IV
2. **All disassembled parts should be washed clean and any fluid passages and holes should be blown through with compressed air.**
3. **Dry all parts with compressed air–never use shop rags.**
4. **When using compressed air, always aim away from yourself to prevent accidentally spraying ATF or kerosene on your face.**
5. **The recommended automatic transaxle fluid or kerosene should be used for cleaning.**
6. **After cleaning, the parts should be arranged in the correct order for efficient inspection, repairs, and reassembly.**
7. **When disassembling a valve body, be sure to match each valve together with the corresponding spring.**
8. **New discs for the brakes and clutches that are to be used for replacement must be soaked in ATF for at least 15 minutes before reassembly.**
9. **All oil seal rings, clutch discs, clutch plates, rotating parts, and sliding surfaces should be coated with ATF prior to reassembly.**
10. **All gaskets and rubber O–rings should be replaced.**
11. **Do not apply adhesive cements to gaskets and similar parts.**
12. **Make sure that the ends of a snap ring are not aligned with one of the cutouts and are installed in the groove correctly.**
13. **If a worn bushing is to be replaced, the sub–assembly containing the bushing must also be replaced.**
14. **Check thrust bearings and races for wear or damage. Replace if necessary.**
15. **Use petroleum jelly to keep parts in place.**
16. **When working with FIPG material, you must observe the following.**
    Using a razor blade and a gasket scraper, remove all the old packing (FIPG) material from the gasket surface.
    Thoroughly clean all components to remove all the loose material.
    Clean both sealing surfaces with a non–residue solvent.
    Parts must be reassembled within 10 minutes of application. Otherwise, the packing (FIPG) material must be removed and reapplied.

AUTOMATIC TRANSAXLE FLUID (ATM)

400MN–01

ON–VEHICLE INSPECTION

1. CHECK THE FLUID LEVEL

HINT:

Drive the vehicle so that the engine and transaxle are at normal operating temperature.

Fluid temperature: 70 – 80 ˚C (158 – 176 ˚F)

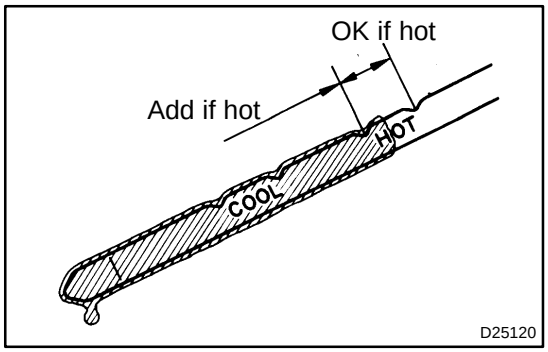

(a) Park the vehicle on a level surface and set the parking brake.

(b) With the engine idling and the brake pedal depressed, shift the shift lever into all ranges from P to L position and return to P position.

(c) Pull out the dipstick and wipe it clean.

(d) Push it back fully into the pipe.

(e) Pull it out and check that the fluid level is in the HOT position.

If there are leaks, it is necessary to repair or replace O–rings, FIPGs, oil seals, plugs or other parts.

TORQUE CONVERTER CLUTCH AND DRIVE PLATE (ATM)

400MW–01

INSPECTION

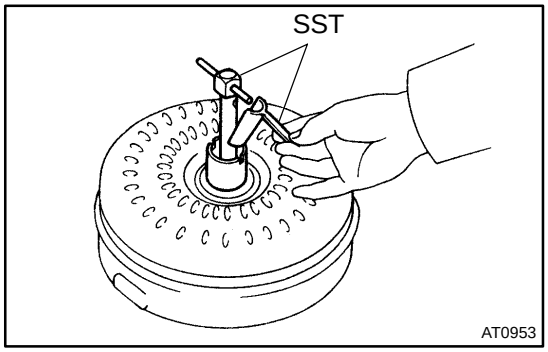

1. INSPECT TORQUE CONVERTER CLUTCH ASSY

(a) Inspect the one–way clutch.

(1) Set SST into the inner race of the one–way clutch.

SST 09350–32014 (09351–32010, 09351–32020)

(2) Set SST so that it fits in the notch of the converter hub and outer race of the one–way clutch.

SST 09350–32014 (09351–32010, 09351–32020)

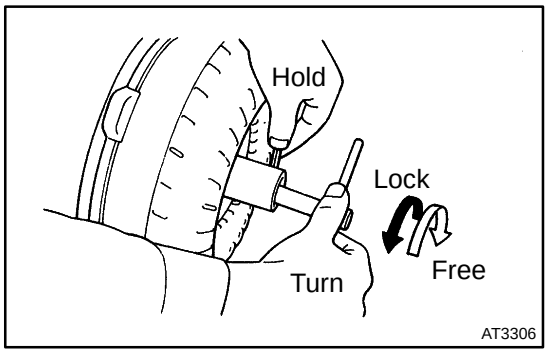

(3) With the torque converter clutch setting up on its side, check that the one–way clutch locks when it is turned counterclockwise, and rotates smoothly clockwise.

If necessary, clean the torque converter clutch and retest the one–way clutch.

Replace the torque converter clutch if the one–way clutch still fails the test.

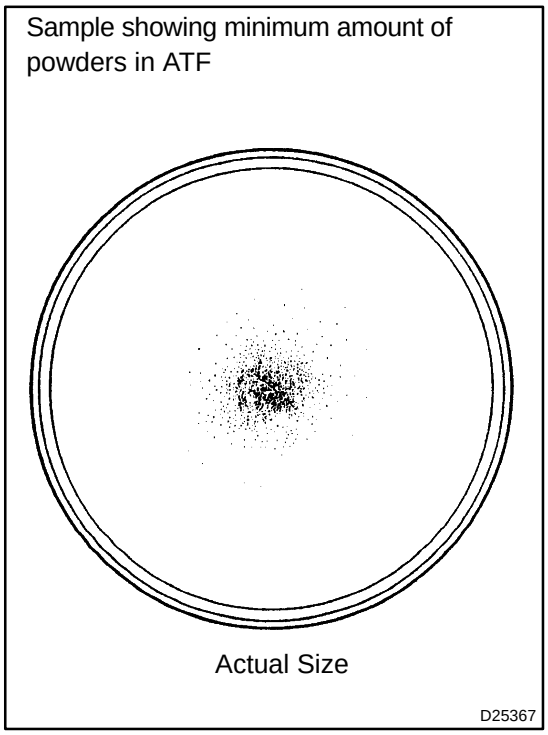

(b) Determine the condition of the torque converter clutch assy.

(1) If the inspection result of the torque converter clutch assy meets the following item, replace the torque converter clutch.

Malfunction item:

Any metallic sound is heard from the torque converter clutch during stall test or when the shift lever is in neutral position.

One–way clutch is free or locked in both directions.

Fine powders exceeding the sample limit is identified in ATF. (See the sample.)

HINT:

The sample shows the auto fluid of approx. 0.25 liters (0.26 US qts, 0.22 Imp. qts) that is taken out from the removed torque converter clutch

(c) Replace the ATF in the torque converter clutch.

(1) If the ATF is discolored and/or has a foul odor, completely stir the ATF in the torque converter clutch and drain it with the face for installation facing up.

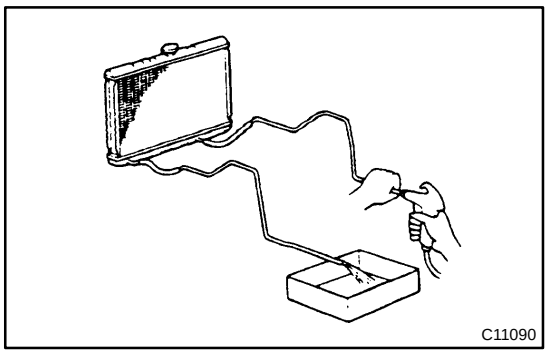

(d) Clean and check the oil cooler and oil pipe line.
(1) If the torque converter clutch is inspected or the ATF is exchanged, clean the oil cooler and oil pipe line.

HINT:

- Spray compressed air of 196 kPa (2 kgf/cm^2, 28 psi) from the inlet hose.
- If plenty of fine powders are identified in the ATF, add new ATF using a bucket pump and clean it again.

(2) If the ATF is cloudy, inspect the oil cooler.

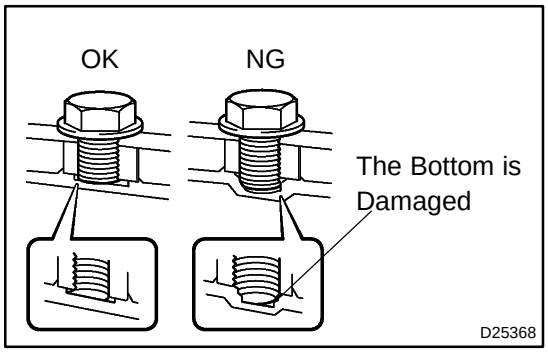

(e) Prevent deformation of the torque converter clutch and damage to the oil pump gear.
(1) When any marks due to interference are found on the end of the bolt for the torque converter clutch and on the bottom of the bolt hole, replace the bolt and the torque converter clutch.
(2) All of the bolts should have the same length.
(3) No missing spring washer.

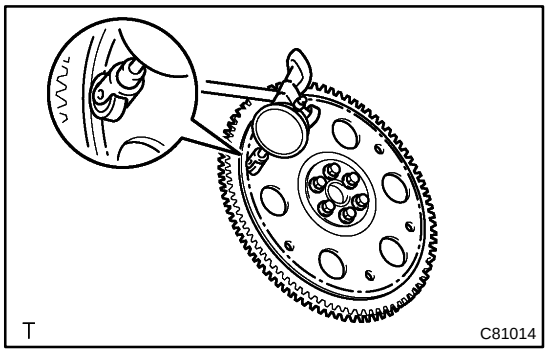

2. INSPECT DRIVE PLATE & RING GEAR SUB–ASSY

(a) Set up a dial indicator and measure the drive plate runout.
(b) Check the damage of the ring gear.
Maximum runout: 0.20 mm (0.0079 in.)

If the runout is not within the specification or ring gear is damaged, replace the drive plate.

SHIFT LOCK SYSTEM (ATM)

400N9–01

ON–VEHICLE INSPECTION

1. CHECK SHIFT LOCK OPERATION

(a) Shift the shift lever to P position.
(b) Turn the ignition switch to LOCK.
(c) Check that the shift lever cannot be shifted to any other positions other than P.
(d) Turn the ignition switch to ON, depress the brake pedal and check that the shift lever can be shifted to any other positions.

2. CHECK SHIFT LOCK RELEASE BUTTON OPERATION

(a) Using a screwdriver, remove the shift lock release button cover.
(b) When operating the shift lever with the shift lock release button pressed and the ignition key in ACC or ON, check that the lever can be shifted to any other position.

3. CHECK KEY INTERLOCK OPERATION

(a) Turn the ignition switch to ON.
(b) Depress the brake pedal and shift the shift lever to any other positions other than P.
(c) Check that the ignition key cannot be turned to LOCK.
(d) Shift the shift lever to P position, turn the ignition key to LOCK and check that the ignition key can be removed.

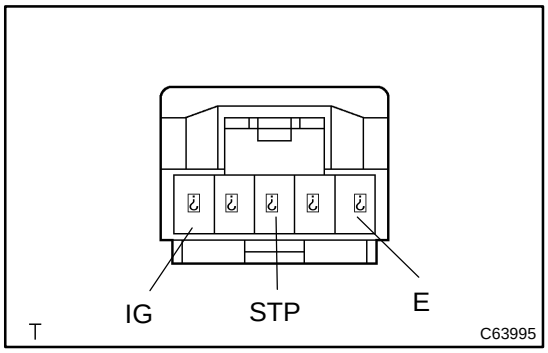

4. INSPECT SHIFT LOCK CONTROL ECU

(a) Using a voltmeter, measure the voltage at each terminal.

HINT:

Do not disconnect the shift lock control ECU connector.

Terminal	Measuring Condition	Voltage (V)
5 (IG) – 1 (E)	Ignition switch ON	10 – 14
5 (IG) – 1 (E)	Ignition switch OFF	0
3 (STP) – 1 (E)	Depress brake pedal	10 – 14
3 (STP) – 1 (E)	Release brake pedal	0

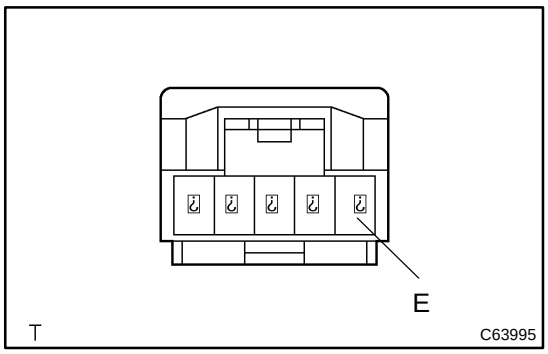

(b) Using an ohmmeter, measure the resistance at terminal E (1) and body ground.

Terminal	Measuring Condition	Specified Value
1 (E) – Body ground	Always	Continuity

ADJUSTMENT

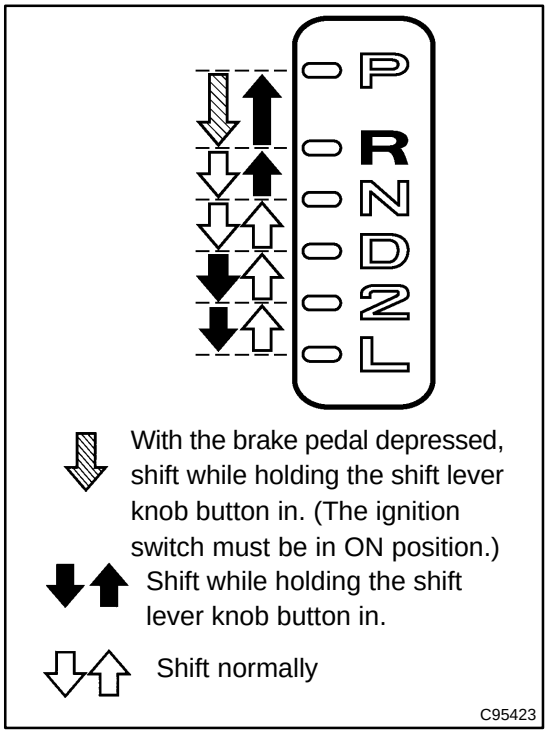

1. INSPECT SHIFT LEVER POSITION

(a) When shifting the shift lever to each position, make sure that it moves smoothly, and the position indicator displays correctly.

Positions which can be shifted without pressing the shift lever knob button

R → N → D, L → 2 → D → N

Positions which can be operated only while pressing the shift lever knob button

D → 2 → L, N → R → P

Positions which can be operated only while pressing the shift lever knob button, ignition switch ON and brake pedal depressed

P → R

(b) Start the engine and make sure that the vehicle moves forward when shifting the lever from N to D position, and moves rearward when shifting to R position.

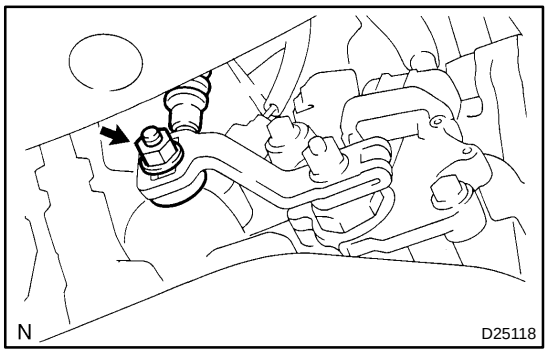

2. ADJUST SHIFT LEVER POSITION

(a) Loosen the nut on the control shaft lever.

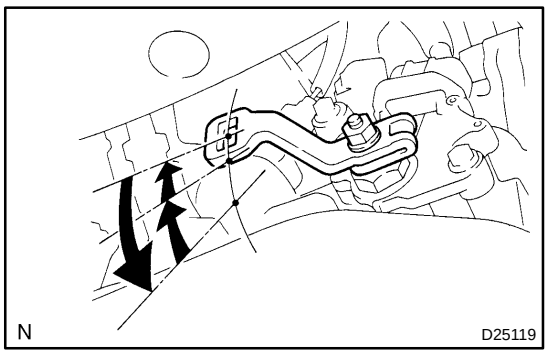

(b) Push the control shaft fully downward.

(c) Return the control shaft lever 2 notches to N position.

(d) Set the shift lever to N position.

(e) While holding the shift lever lightly toward the R position side, tighten the shift lever nut.

Torque: 12 N·m (122 kgf·cm, 9 ft·lbf)

(f) Start the engine and make sure that the vehicle moves forward when shifting the lever from N to D position and moves rearward when shifting it to R position.

FLOOR SHIFT ASSY (ATM)

400NA–01

COMPONENTS

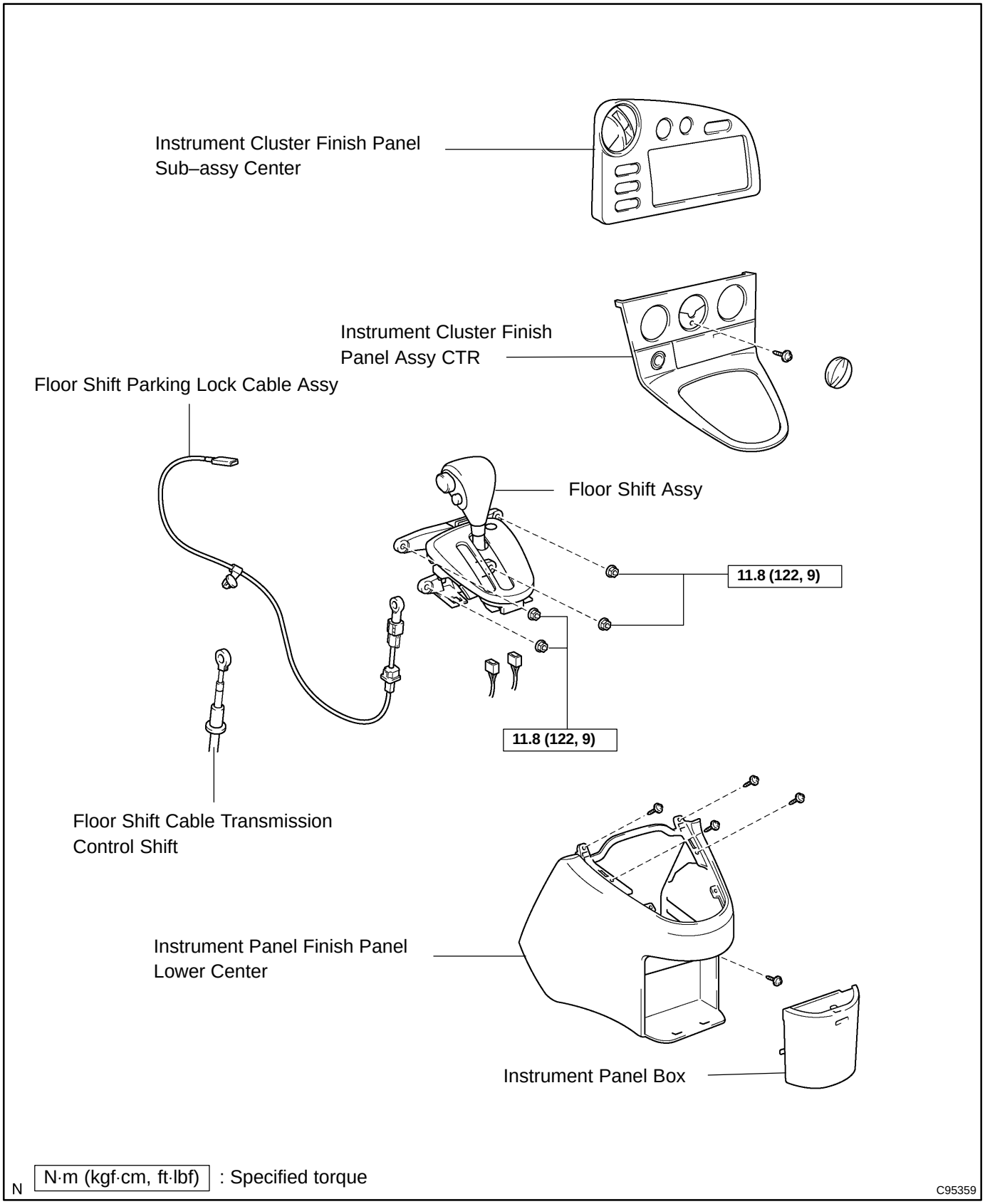

N N·m (kgf·cm, ft·lbf) : Specified torque

C95359

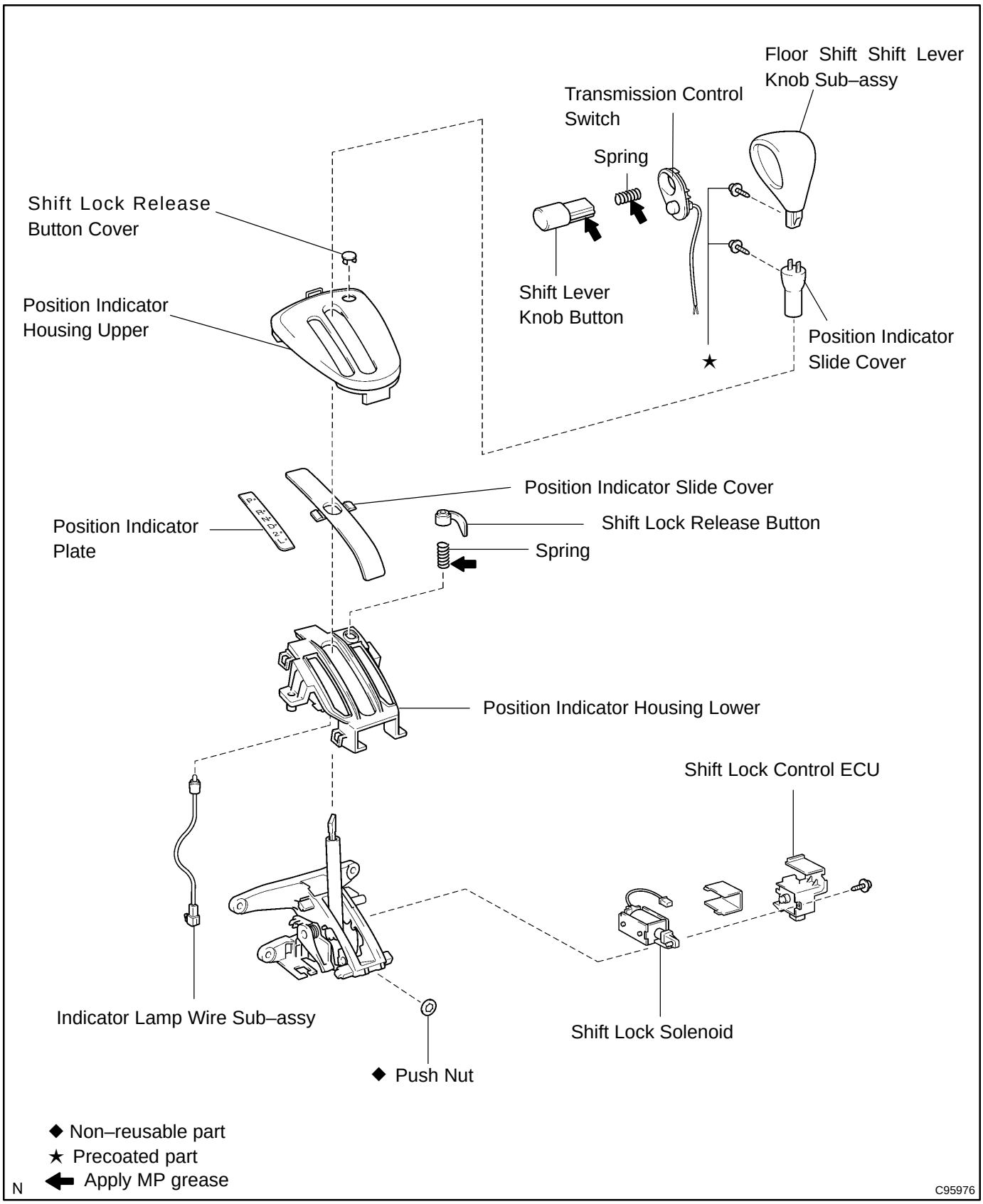
Floor Shift Shift Lever Knob Sub–assy
Transmission Control Switch
Spring
Shift Lock Release Button Cover
Shift Lever Knob Button
Position Indicator Housing Upper
Position Indicator Slide Cover
★
Position Indicator Slide Cover
Position Indicator Plate
Shift Lock Release Button
Spring
Position Indicator Housing Lower
Shift Lock Control ECU
Indicator Lamp Wire Sub–assy
Shift Lock Solenoid
◆ Push Nut
◆ Non–reusable part
★ Precoated part
Apply MP grease
N
C95976

400NB–01

OVERHAUL

1. **REMOVE INSTRUMENT CLUSTER FINISH PANEL SUB–ASSY CENTER (See page 71–10)**
2. **REMOVE INSTRUMENT CLUSTER FINISH PANEL ASSY CTR (See page 71–10)**
3. **REMOVE INSTRUMENT PANEL BOX (See page 71–10)**
4. **REMOVE INSTRUMENT PANEL FINISH PANEL LOWER CENTER (See page 71–10)**

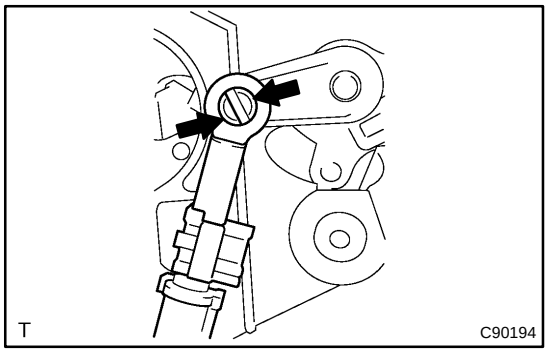

5. DISCONNECT FLOOR SHIFT PARKING LOCK CABLE ASSY

(a) Push the claw and disconnect the parking lock cable assy from the shift lock release link.

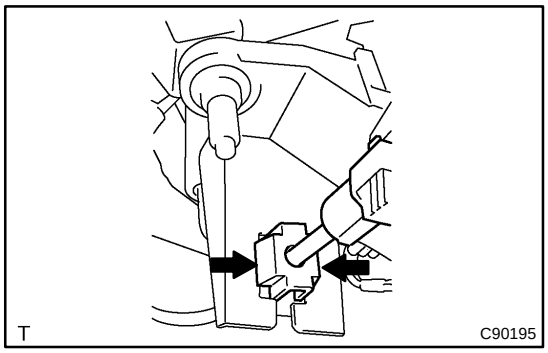

(b) Using a screw driver, disconnect the parking lock cable assy from the shift lever plate.

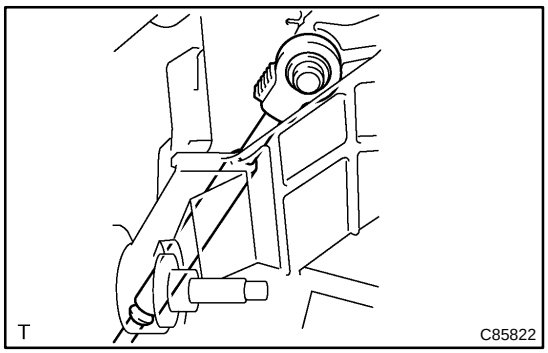

6. DISCONNECT FLOOR SHIFT CABLE TRANSMISSION CONTROL SHIFT

(a) Disconnect the control cable end from the shift lever.

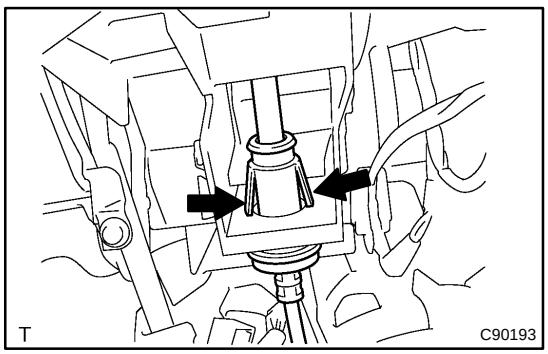

(b) Using a screw driver, disconnect the control cable from the shift lever plate.

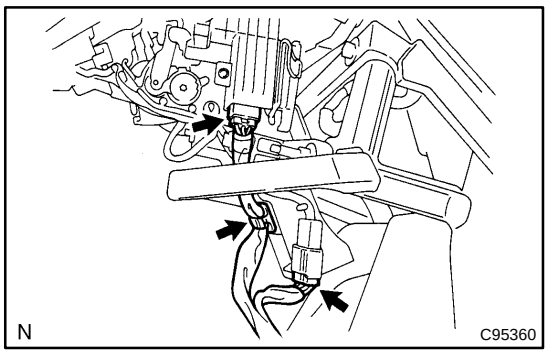

7. REMOVE FLOOR SHIFT ASSY

(a) Disconnect the shift lock control ECU connector and indicator lamp wire connector.

(b) Disconnect the wire harness clamp.

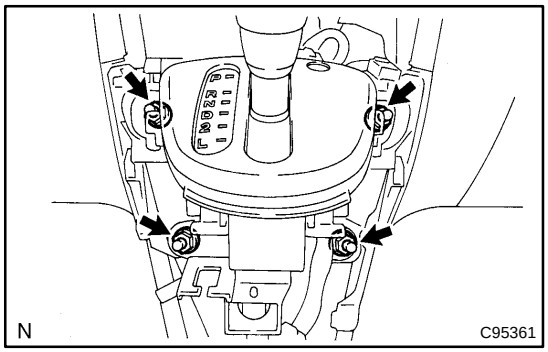

(c) Remove the 4 nuts and floor shift assy.

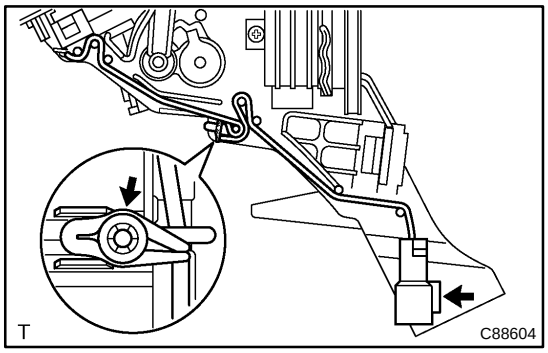

8. REMOVE FLOOR SHIFT SHIFT LEVER KNOB SUB–ASSY

(a) Disconnect the indicator lamp wire connector from the shift lever plate.

(b) Using a small screw driver, remove the push nut.

(c) Separate the wire harness from the shift lever plate.

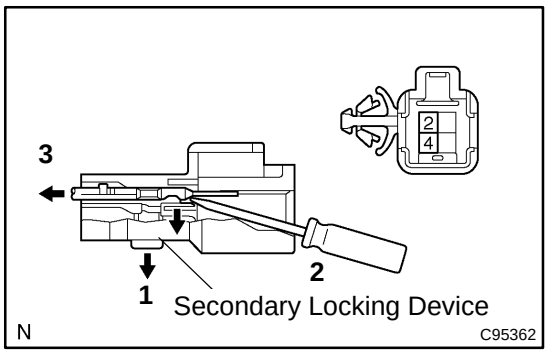

(d) Disengage the secondary locking device.

(e) Release the locking lug of the terminals 2 and 4, and pull the terminals out from the rearward.

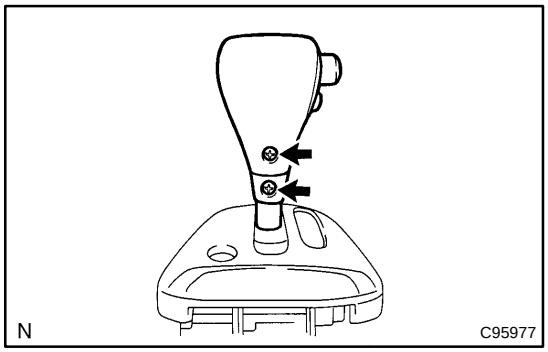

(f) Remove the 2 screws and shift lever knob sub–assy with the position indicator slide cover.

NOTICE:

Pay attention not to apply unnatural load to transmission control switch wire harness.

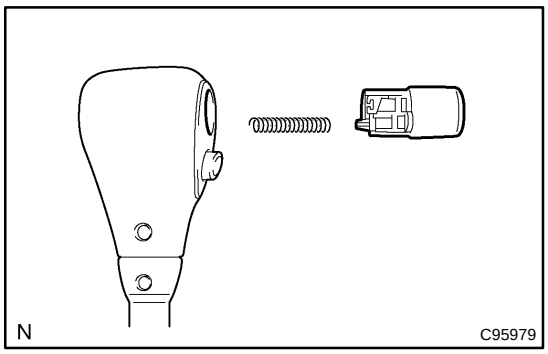

9. REMOVE SHIFT LEVER KNOB BUTTON

(a) Remove the shift lever knob button and spring from the shift lever knob.

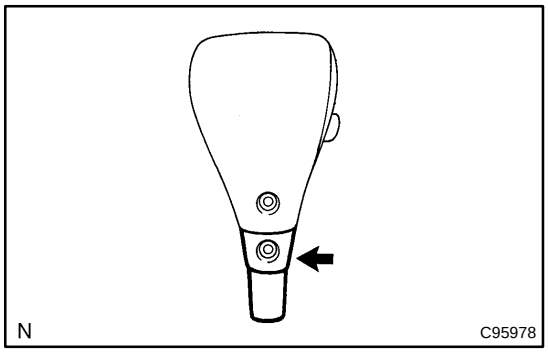

10. REMOVE POSITION INDICATOR SLIDE COVER

(a) Remove the position indicator slide cover No. 2 from the shift lever knob.

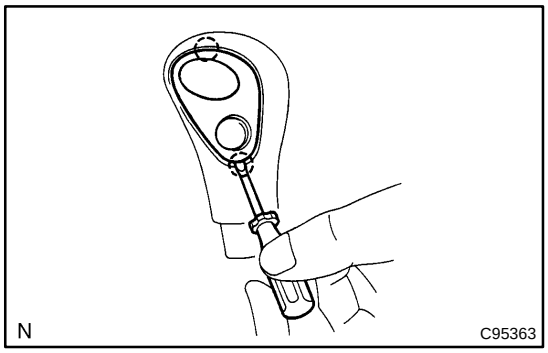

11. REMOVE TRANSMISSION CONTROL SWITCH

(a) Using a small screw driver, remove the transmission control switch from the shift lever knob.

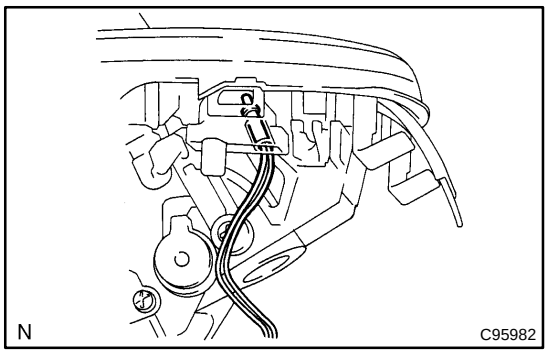

12. REMOVE INDICATOR LAMP WIRE SUB–ASSY

(a) Remove the indicator lamp wire sub–assy from the position indicator housing lower.

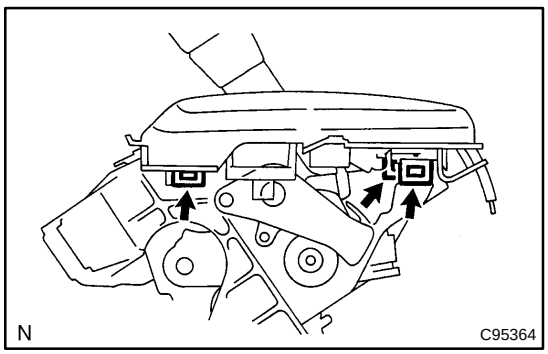

13. REMOVE POSITION INDICATOR HOUSING LOWER

(a) Remove the position indicator housing lower with the position indicator housing upper from the shift lever plate.

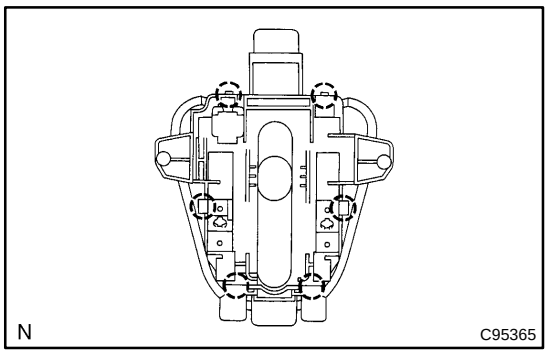

14. REMOVE POSITION INDICATOR HOUSING UPPER

(a) Using a small screw driver, remove the position indicator housing upper from the position indicator housing lower.

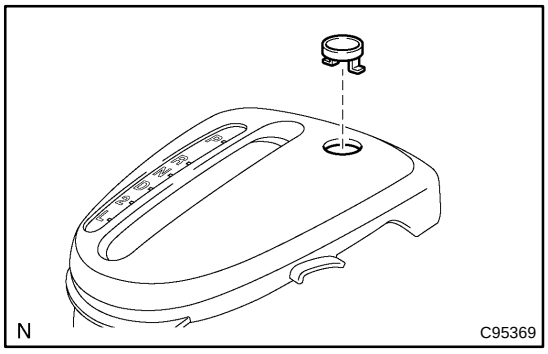

15. REMOVE SHIFT LOCK RELEASE BUTTON COVER

(a) Using a screwdriver, remove the shift lock release button cover.

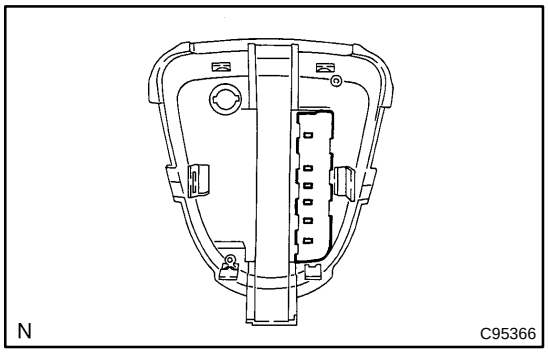

16. REMOVE CONTROL POSITION INDICATOR PLATE

(a) Remove the position indicator plate from the position indicator housing upper.

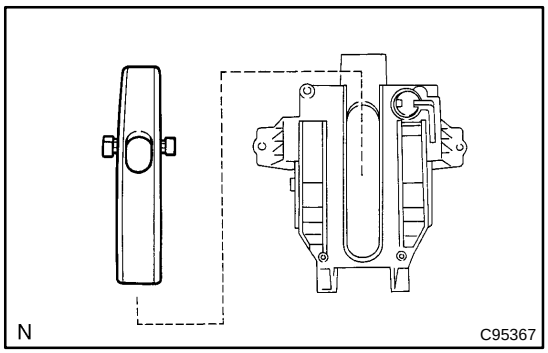

17. REMOVE POSITION INDICATOR SLIDE COVER

(a) Remove the position indicator slide cover from the position indicator housing lower.

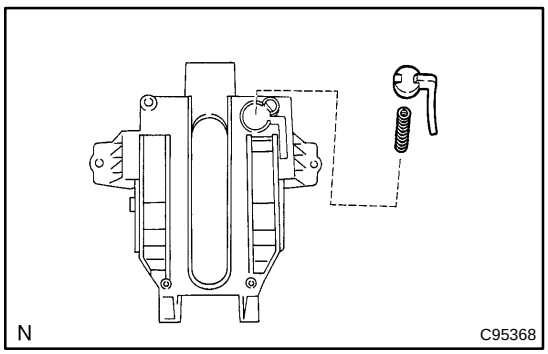

18. REMOVE SHIFT LOCK RELEASE BUTTON

(a) Remove the shift lock release button and spring from the position indicator housing lower.

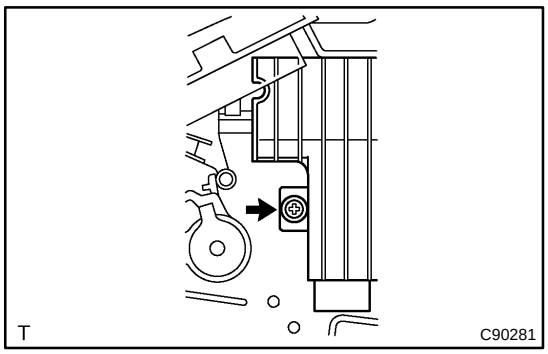

19. REMOVE SHIFT LOCK CONTROL ECU

(a) Remove the screw.

(b) Disconnect the shift lock solenoid connector and remove the shift lock control ECU from the shift lever plate.

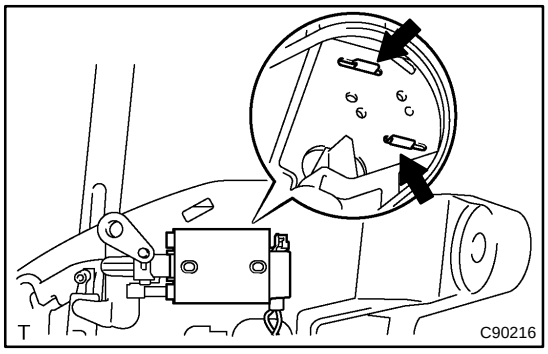

20. REMOVE SHIFT LOCK SOLENOID

(a) Using a screw driver, remove the shift lock solenoid from the shift lever plate.

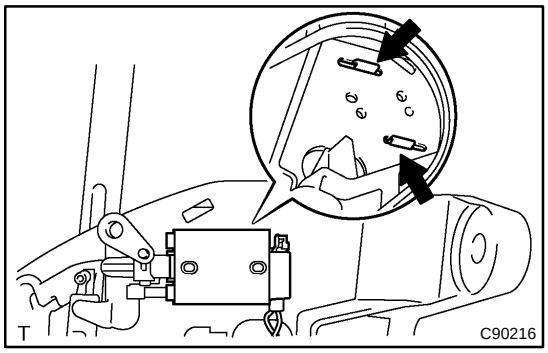

21. INSTALL SHIFT LOCK SOLENOID

(a) Install the shift lock solenoid to the shift lever plate.

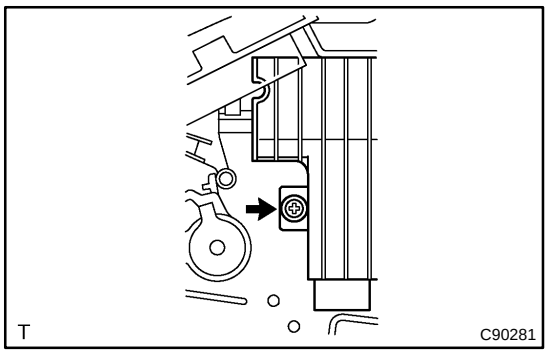

22. INSTALL SHIFT LOCK CONTROL ECU

(a) Connect the shift lock solenoid connector to the shift lock control ECU.

(b) Install the shift lock control ECU with the screw.

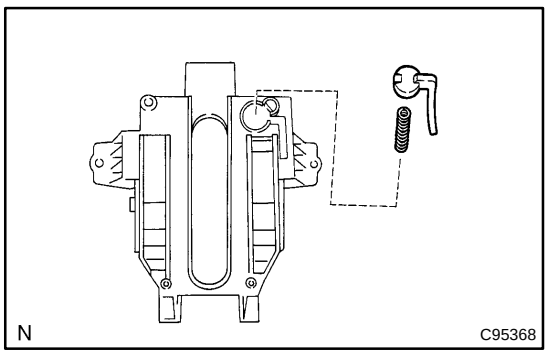

23. INSTALL SHIFT LOCK RELEASE BUTTON

(a) Apply MP grease to the spring.

(b) Install the shift lock release button and spring.

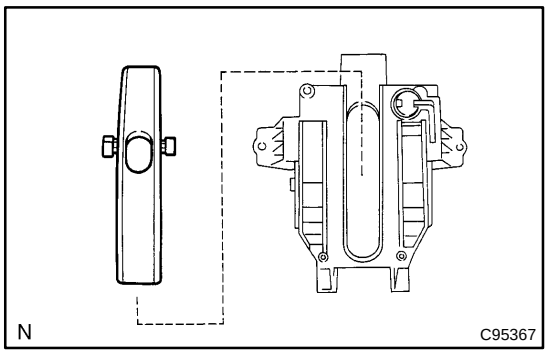

24. INSTALL POSITION INDICATOR SLIDE COVER

(a) Install the position indicator slide cover to the position indicator housing lower.

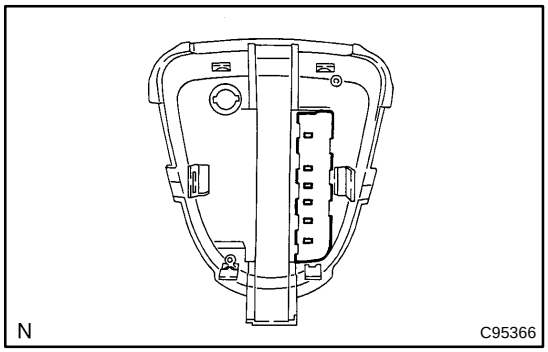

25. INSTALL CONTROL POSITION INDICATOR PLATE

(a) Install the position indicator plate to the position indicator housing upper.

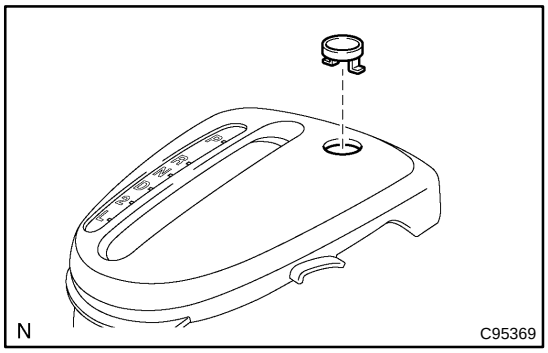

26. INSTALL SHIFT LOCK RELEASE BUTTON COVER

(a) Install the shift lock release button cover.

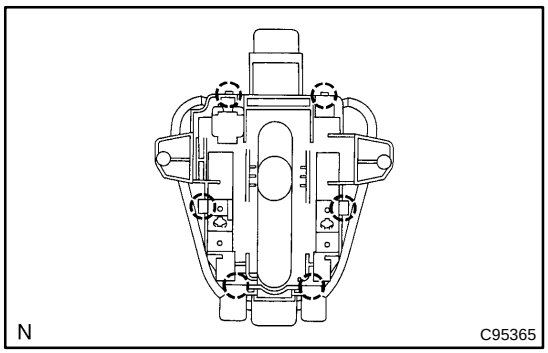

27. INSTALL POSITION INDICATOR HOUSING UPPER

(a) Install the position indicator housing upper to the position indicator housing lower.

HINT:

Fit the claws securely.

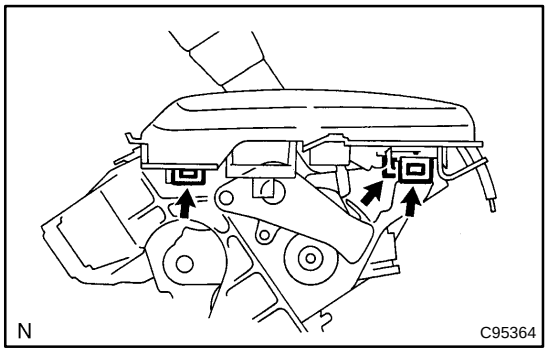

28. INSTALL POSITION INDICATOR HOUSING LOWER

(a) Install the position indicator housing lower with the position indicator housing upper to the shift lever plate.

HINT:

Fit the claws securely.

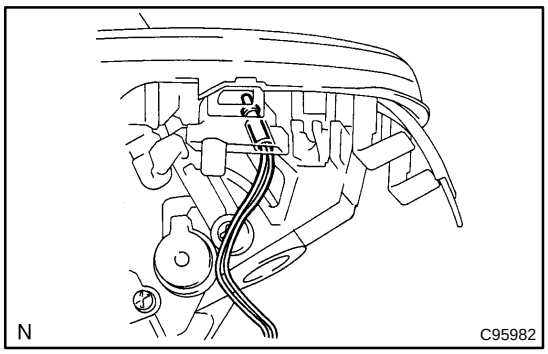

29. INSTALL INDICATOR LAMP WIRE SUB–ASSY

(a) Install the indicator lamp wire sub–assy to the position indicator housing lower.

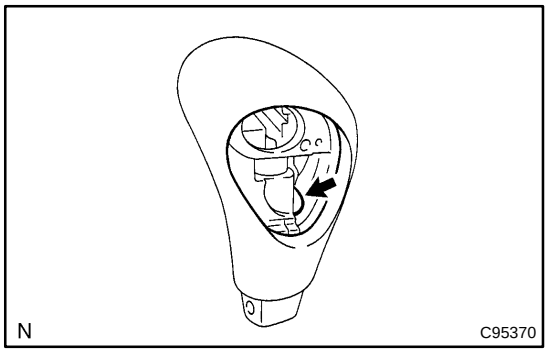

30. INSTALL TRANSMISSION CONTROL SWITCH

(a) Insert the wire harness into the shift lever knob from the part shown by the arrow, and install the transmission control switch to the shift lever knob.

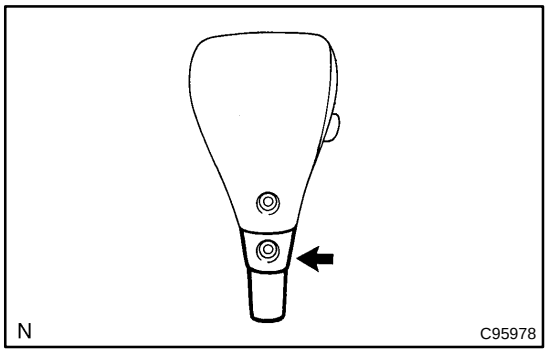

31. INSTALL POSITION INDICATOR SLIDE COVER

(a) Install the position indicator slide cover No. 2 to the shift lever knob.

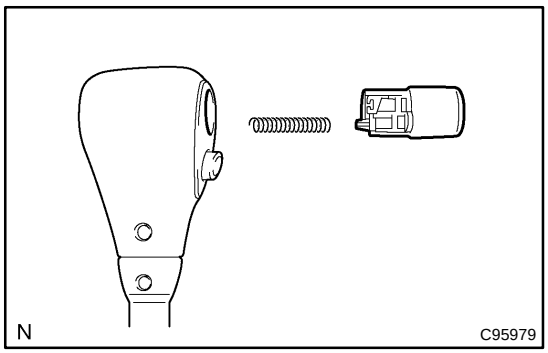

32. INSTALL SHIFT LEVER KNOB BUTTON

(a) Apply MP grease to the spring and shift lever knob button.

(b) Install the spring and shift lever knob button to the shift lever knob.

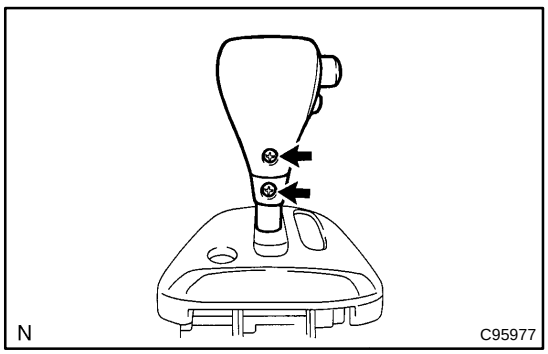

33. INSTALL FLOOR SHIFT SHIFT LEVER KNOB SUB–ASSY

(a) Install the shift lever knob with the 2 screws.

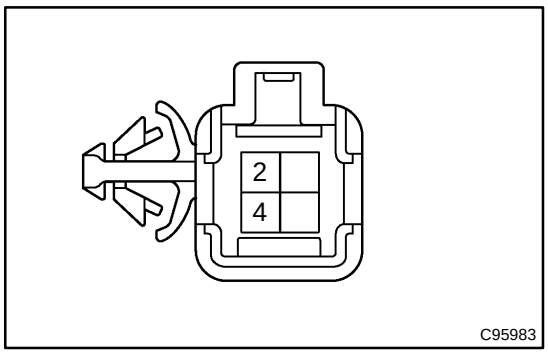

(b) Connect the 2 wire harness of transmission control switch to the connector of indicator lamp wire.

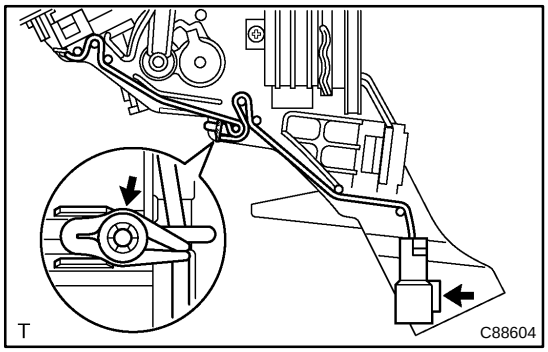

(c) Install the wire harness with a new push nut to the shift lever plate as shown in the illustration.

(d) Connect the indicator lamp wire connector to the shift lever plate.

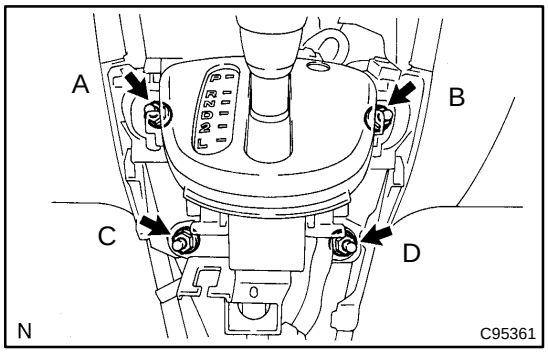

34. INSTALL FLOOR SHIFT ASSY

(a) Install the floor shift assy with the 4 nuts .

Torque: 11.8 N·m (122 kgf·cm, 9 ft·lbf)

HINT:

Tighten them in the order, A, B, C and D.

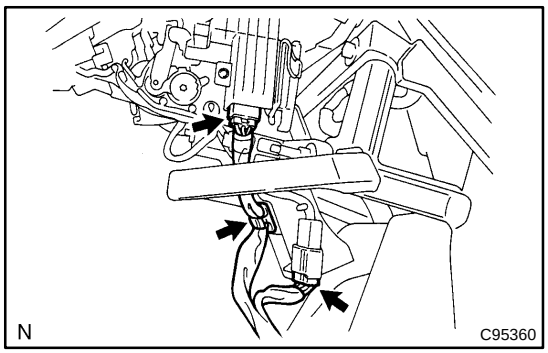

(b) Connect the shift lock control ECU connector and indicator lamp wire connector.

(c) Connect the wire harness clamp.

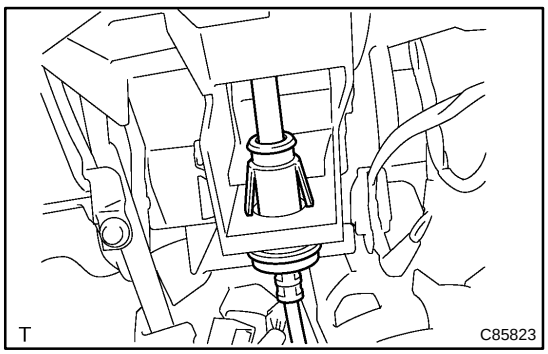

35. CONNECT FLOOR SHIFT CABLE TRANSMISSION CONTROL SHIFT

(a) Install the control cable to the shift lever plate.

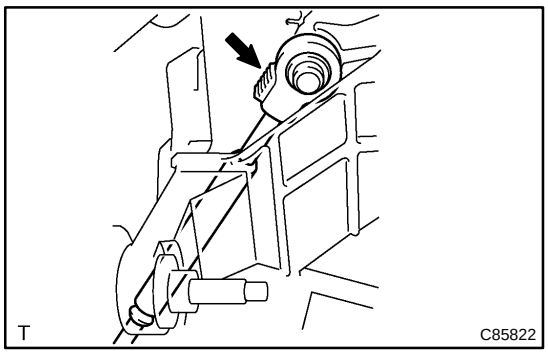

(b) Connect the control cable end to the floor shift assy.

HINT:

Install it with the uneven surface facing up.

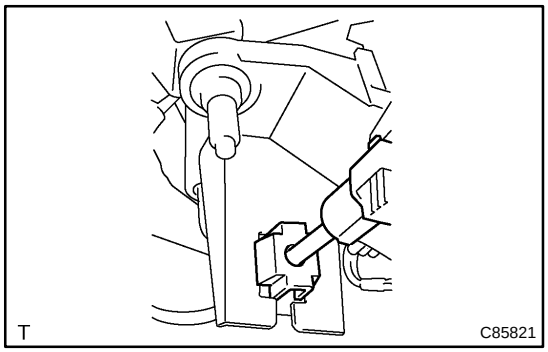

36. CONNECT FLOOR SHIFT PARKING LOCK CABLE ASSY

(a) Pass the parking lock cable through the hole of shift lever plate.

(b) Insert the slide cap into the shift lever plate.

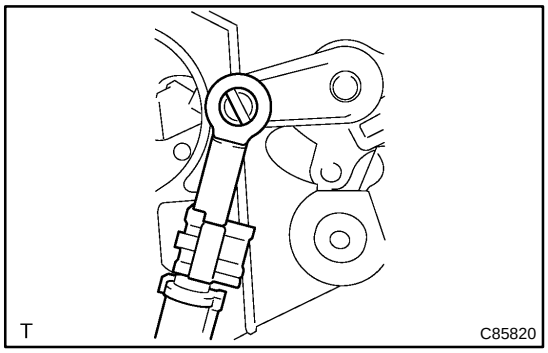

(c) Apply MP grease to the shift lock release link.

(d) Insert the lever pin into the hole in the cable end.

37. CHECK KEY INTERLOCK OPERATION (See page 40–74)

38. CHECK SHIFT LOCK OPERATION (See page 40–74)

39. CHECK SHIFT LOCK RELEASE BUTTON OPERATION (See page 40–74)

SHIFT LOCK SOLENOID (ATM)

400NE–01

INSPECTION

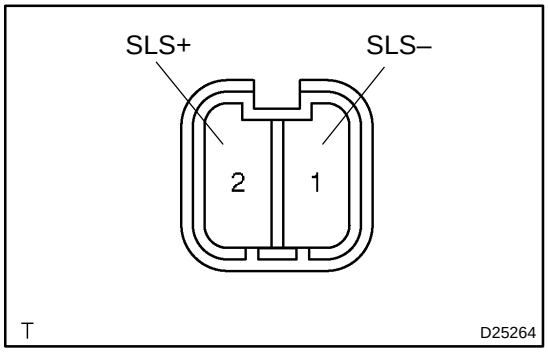

1. INSPECT SHIFT LOCK SOLENOID

(a) Disconnect the solenoid connector.

(b) Apply battery positive voltage between terminals 1 and 2. Check that operation noise can be heard from the solenoid.

If the solenoid does not operate, replace the solenoid.

FLOOR SHIFT CABLE TRANSMISSION CONTROL SELECT (MTM)

4107V–01

REPLACEMENT

HINT:

COMPONENTS: See page 41–5 or 71–7

1. PRECAUTION

NOTICE:

Do not open the cover or the case of the ECU and various electrical devices unless absolutely necessary (If the IC terminals are touched, the IC may be destroyed by static electricity.).

2. DISCONNECT BATTERY NEGATIVE TERMINAL

3. REMOVE FLOOR SHIFT SHIFT LEVER KNOB SUB–ASSY

4. REMOVE INSTRUMENT CLUSTER FINISH PANEL ASSY CTR (See page 71–10)

5. REMOVE INSTRUMENT PANEL BOX (See page 71–10)

6. REMOVE INSTRUMENT PANEL FINISH PANEL LOWER CENTER (See page 71–10)

7. REMOVE AIR BAG SENSOR ASSY CENTER (See page 60–39)

8. REMOVE FLOOR SHIFT CABLE TRANSMISSION CONTROL SELECT

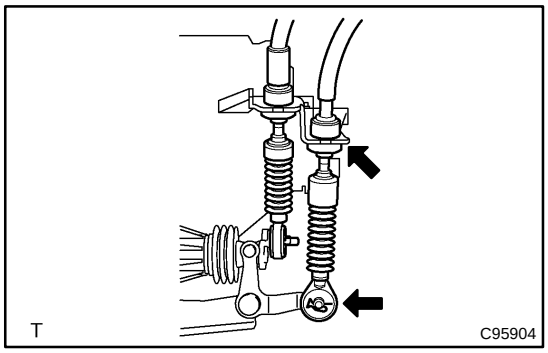

(a) Remove the clip, washer and disconnect the cable end of the select cable from the transaxle.

(b) Remove the clip and disconnect the select cable from the bracket.

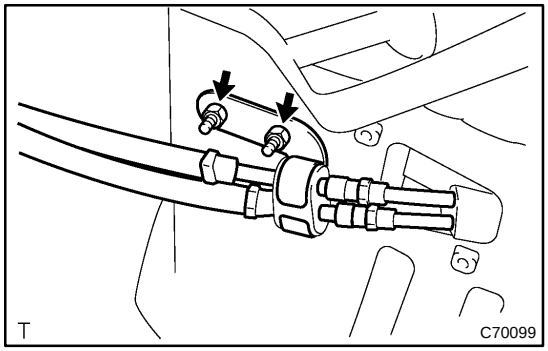

(c) Remove the 2 nuts and disconnect the select cable.

(d) DIsconnect the select cable from the clamp.

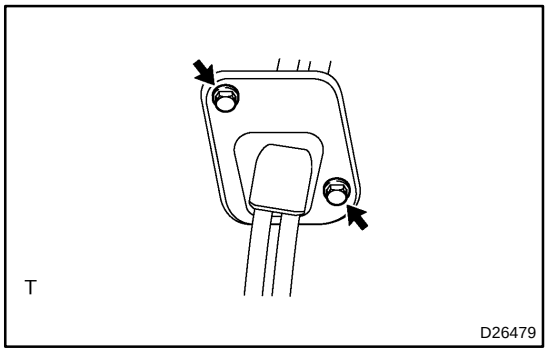

(e) Remove the 2 bolts and shift cable grommet retainer.

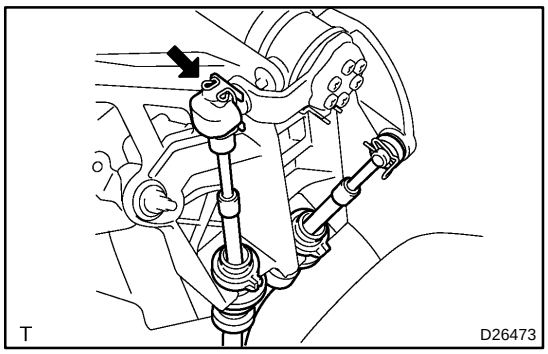

(f) Remove the clip and disconnect the cable end of the select cable from the shift lever assy.

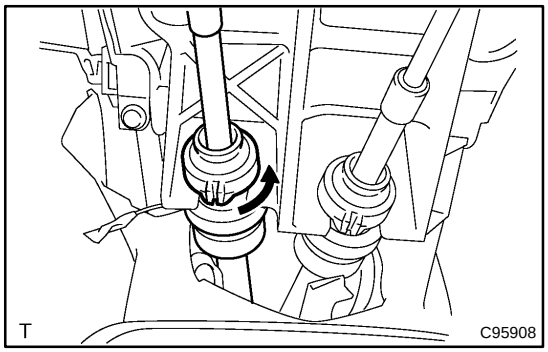

(g) Turn the lock and disconnect the select cable from the shift lever assy.

(h) Pull out the select cable from the floor.

9. INSTALL FLOOR SHIFT CABLE TRANSMISSION CONTROL SELECT

(a) Pull in the select cable to the floor.

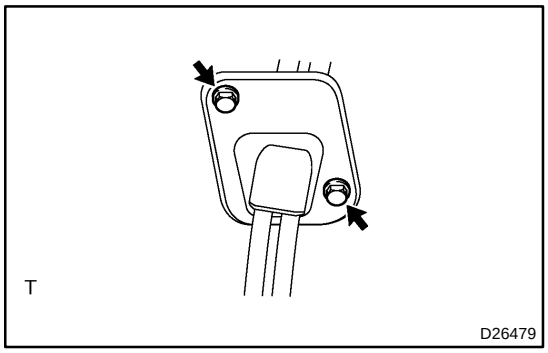

(b) Install the shift cable grommet retainer with the 2 bolts.
Torque: 5.0 N·m (51 kgf·cm, 44 in.·lbf)

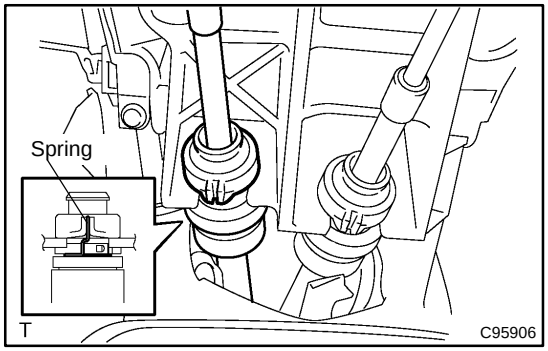

(c) Connect the select cable to the shift lever assy.

NOTICE:

- **The projecting part of the cable outer should face upward when the shift cable is installed.**
- **Make sure that after installation the cable outer spring is moved to the place shown in the illustration.**

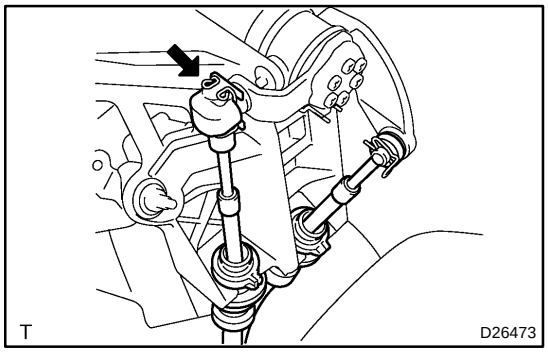

(d) Connect the select cable end with the clip to the shift lever assy.

(e) Connect the select cable to the clamp.

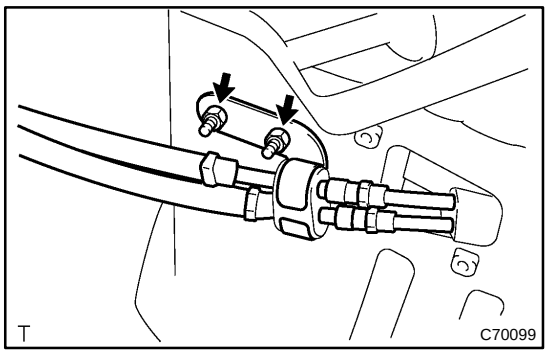

(f) Connect the select cable with the 2 nuts.
Torque: 5.0 N·m (51 kgf·cm, 44 in.·lbf)

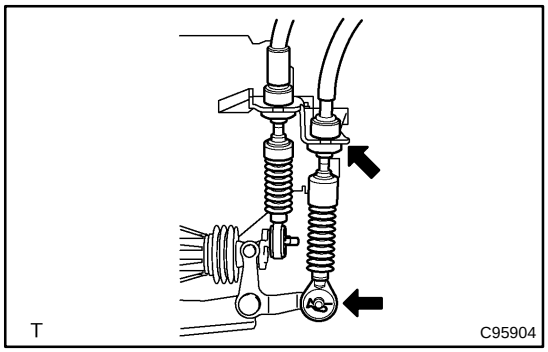

(g) Connect the select cable with the clip from the bracket.
(h) Connect the cable end of the select cable and with the washer and clip to the transaxle.

10. INSTALL AIR BAG SENSOR ASSY CENTER (See page 60–39)
SST 09249–63010

11. INSPECT SRS WARNING LIGHT (See page 05–543)

MANUAL TRANSAXLE ASSY (C59)

COMPONENTS

4107Y–01

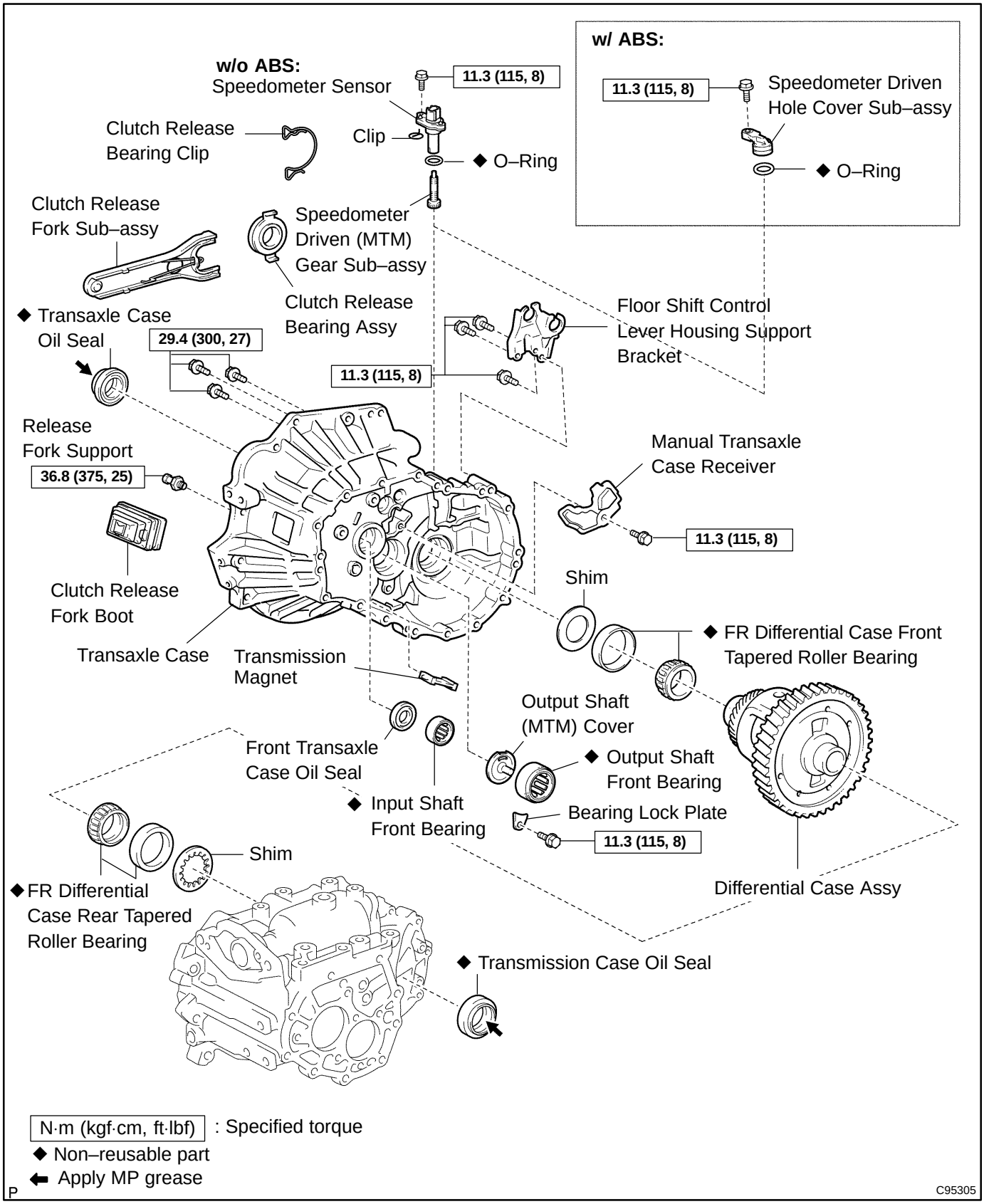

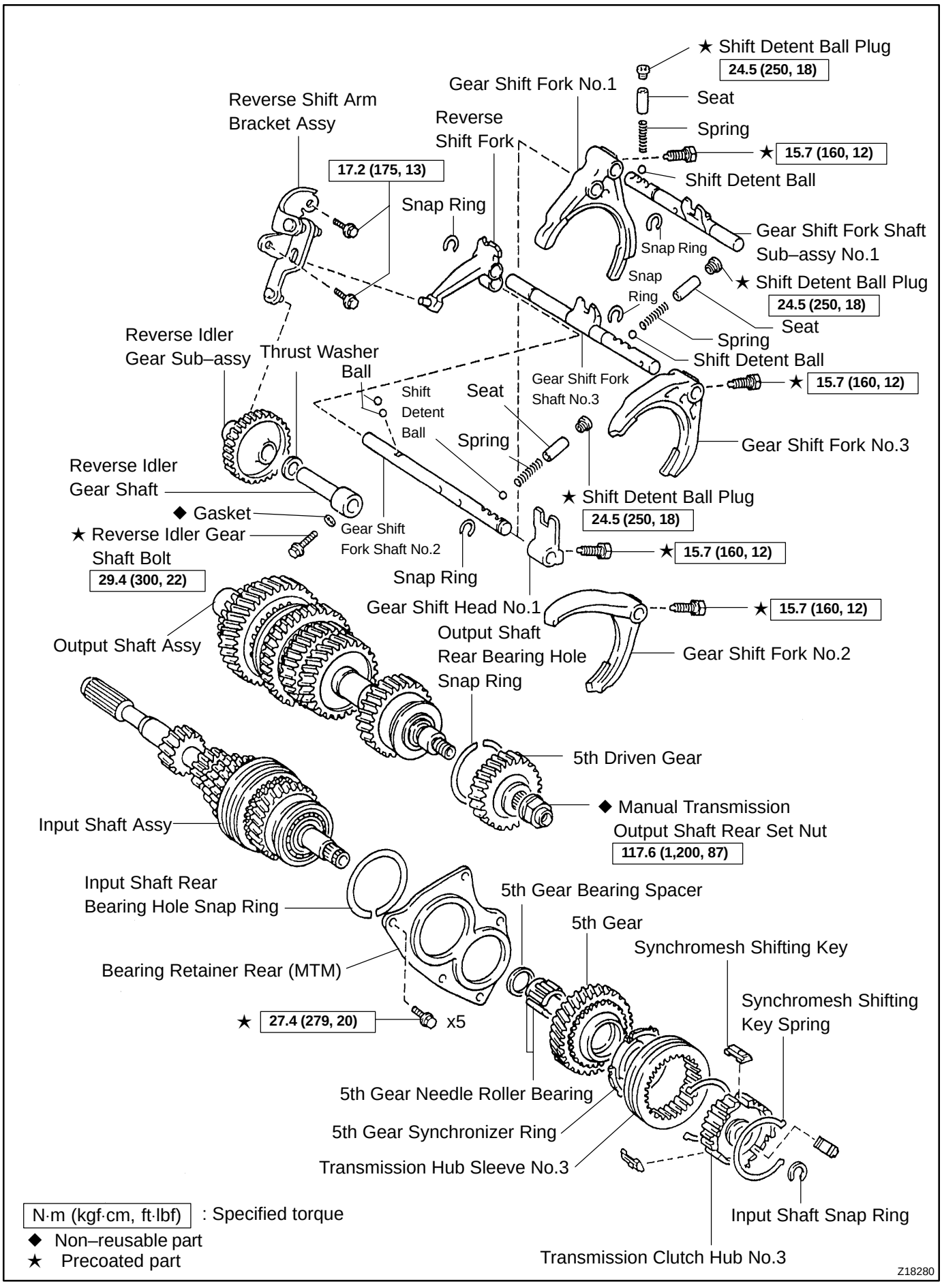
★ Shift Detent Ball Plug
24.5 (250, 18)
Gear Shift Fork No.1
Seat
Spring
★ 15.7 (160, 12)
Shift Detent Ball
Reverse Shift Arm Bracket Assy
Reverse Shift Fork
17.2 (175, 13)
Snap Ring
Snap Ring
Gear Shift Fork Shaft Sub–assy No.1
Snap Ring
★ Shift Detent Ball Plug
24.5 (250, 18)
Seat
Spring
Shift Detent Ball
Reverse Idler Gear Sub–assy
Thrust Washer
Ball
Shift Detent Ball
Seat
Spring
Gear Shift Fork Shaft No.3
★ 15.7 (160, 12)
Gear Shift Fork No.3
Reverse Idler Gear Shaft
◆ Gasket
★ Reverse Idler Gear Shaft Bolt
29.4 (300, 22)
Gear Shift Fork Shaft No.2
Snap Ring
★ Shift Detent Ball Plug
24.5 (250, 18)
★ 15.7 (160, 12)
Gear Shift Head No.1
★ 15.7 (160, 12)
Output Shaft Assy
Output Shaft Rear Bearing Hole Snap Ring
Gear Shift Fork No.2
5th Driven Gear
◆ Manual Transmission Output Shaft Rear Set Nut
117.6 (1,200, 87)
Input Shaft Assy
Input Shaft Rear Bearing Hole Snap Ring
5th Gear Bearing Spacer
5th Gear
Synchromesh Shifting Key
Bearing Retainer Rear (MTM)
★ 27.4 (279, 20) x5
Synchromesh Shifting Key Spring
5th Gear Needle Roller Bearing
5th Gear Synchronizer Ring
Transmission Hub Sleeve No.3
Input Shaft Snap Ring
Transmission Clutch Hub No.3
N·m (kgf·cm, ft·lbf) : Specified torque
◆ Non–reusable part
★ Precoated part
Z18280

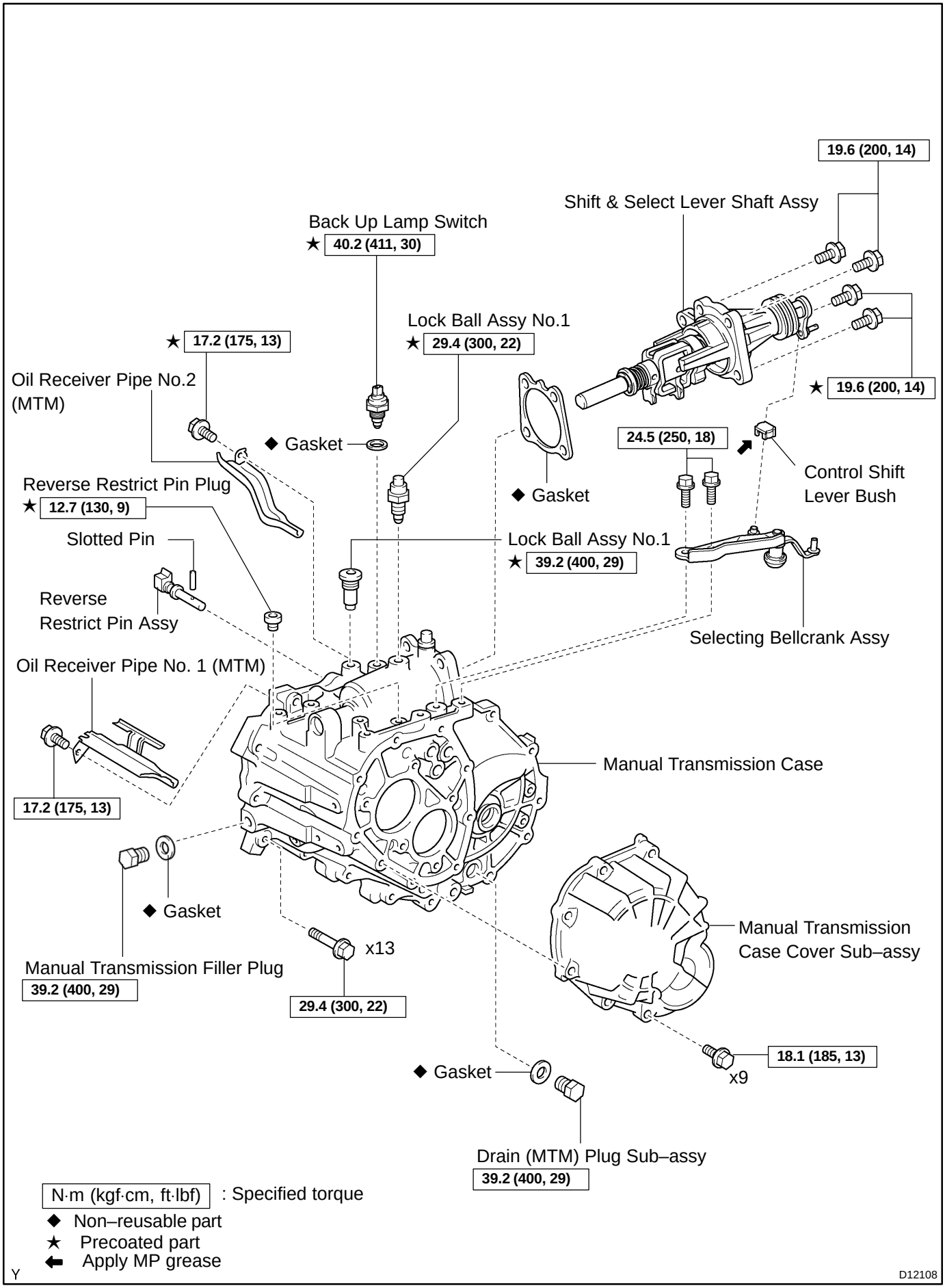
19.6 (200, 14)
Shift & Select Lever Shaft Assy
Back Up Lamp Switch
★ 40.2 (411, 30)
Lock Ball Assy No.1
★ 29.4 (300, 22)
★ 17.2 (175, 13)
Oil Receiver Pipe No.2 (MTM)
◆ Gasket
★ 19.6 (200, 14)
24.5 (250, 18)
Control Shift Lever Bush
◆ Gasket
Reverse Restrict Pin Plug
★ 12.7 (130, 9)
Slotted Pin
Lock Ball Assy No.1
★ 39.2 (400, 29)
Reverse Restrict Pin Assy
Selecting Bellcrank Assy
Oil Receiver Pipe No. 1 (MTM)
Manual Transmission Case
17.2 (175, 13)
◆ Gasket
Manual Transmission Case Cover Sub–assy
x13
Manual Transmission Filler Plug
39.2 (400, 29)
29.4 (300, 22)
18.1 (185, 13)
x9
◆ Gasket
Drain (MTM) Plug Sub–assy
39.2 (400, 29)
N·m (kgf·cm, ft·lbf) : Specified torque
◆ Non–reusable part
★ Precoated part
⬅ Apply MP grease
Y
D12108

OVERHAUL

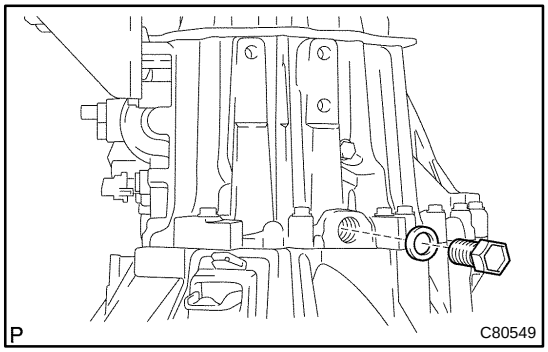

1. REMOVE MANUAL TRANSMISSION FILLER PLUG

(a) Remove the manual transmission filler plug and gasket from the manual transmission case.

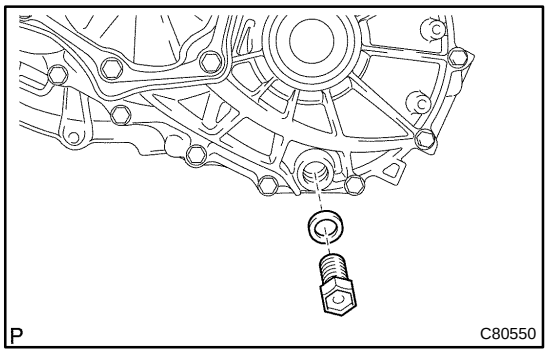

2. REMOVE DRAIN (MTM) PLUG SUB–ASSY

(a) Remove the drain (MTM) plug sub–assy and gasket from the manual transmission case.

3. REMOVE SPEEDOMETER SENSOR (W/O ABS)

(a) Remove the bolt and speedometer sensor from the transaxle case.

(b) Remove the O–ring from the speedometer sensor.

4. REMOVE SPEEDOMETER DRIVEN (MTM) GEAR SUB–ASSY (W/O ABS)

(a) Remove the clip and speedometer driven (MTM) gear sub–assy from the speedometer sensor.

5. REMOVE SPEEDOMETER DRIVEN HOLE COVER SUB–ASSY (W/ ABS)

(a) Remove the bolt and speedometer driven hole cover sub–assy from the transaxle case.

(b) Remove the O–ring from the speedometer driven hole cover.

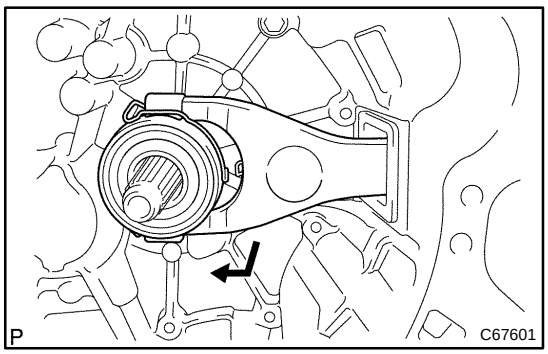

6. REMOVE CLUTCH RELEASE FORK SUB–ASSY

(a) Remove the clutch release fork sub–assy with clutch release bearing assy from the transaxle case.

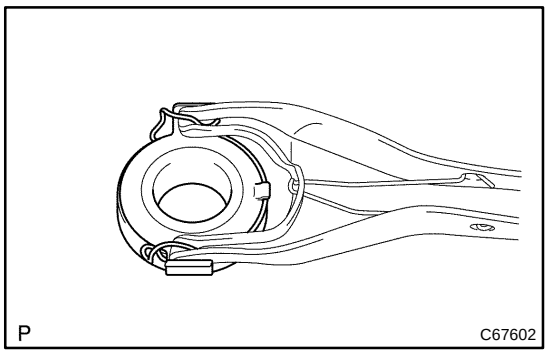

7. REMOVE CLUTCH RELEASE BEARING ASSY

(a) Remove the clutch release bearing clip and clutch release bearing assy from the clutch release fork sub–assy.

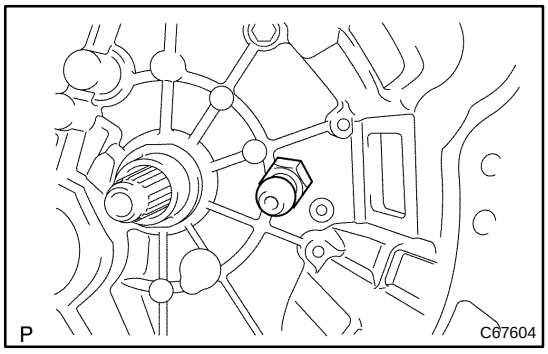

8. REMOVE RELEASE FORK SUPPORT

(a) Remove the clutch release fork support from the transaxle case.

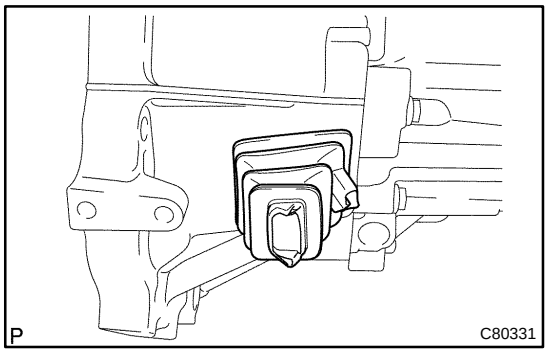

9. REMOVE CLUTCH RELEASE FORK BOOT

(a) Remove the clutch release fork boot from the transaxle case.

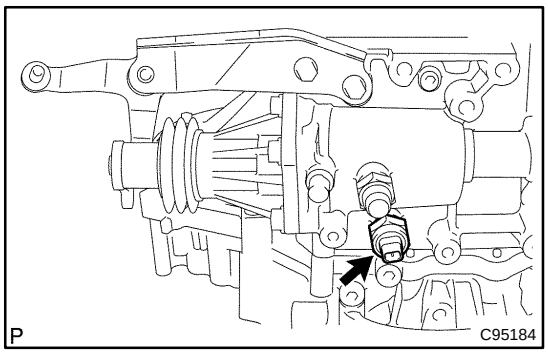

10. REMOVE BACK UP LAMP SWITCH ASSY

(a) Remove the back up lamp switch assy and gasket from the manual transmission case.

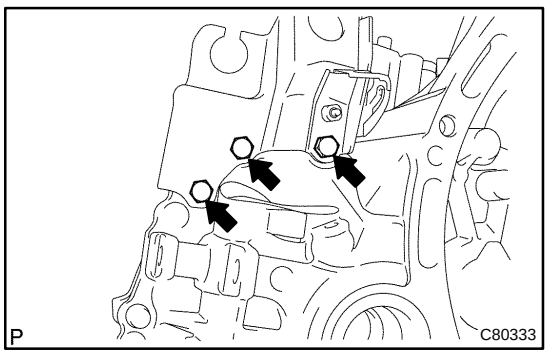

11. REMOVE FLOOR SHIFT CONTROL LEVER HOUSING SUPPORT BRACKET

(a) Remove the 3 bolts and floor shift control lever housing support bracket from the transaxle case.

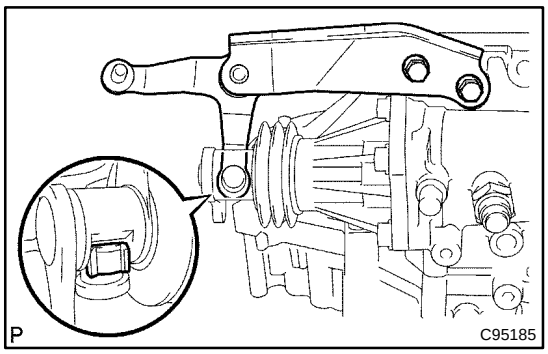

12. REMOVE SELECTING BELL CRANK ASSY

(a) Remove the 2 bolts and selecting bellcrank assy from the manual transmission case.

(b) Remove the control shift lever bush.

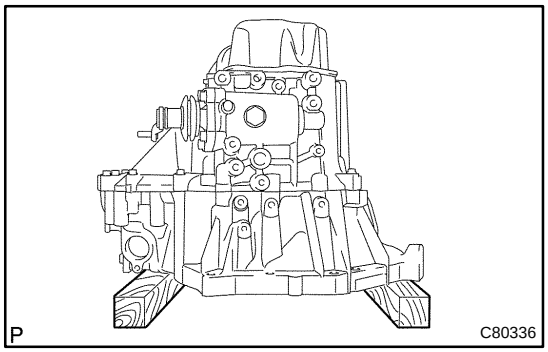

13. FIX MANUAL TRANSAXLE ASSY

(a) Using 2 wooden blocks, fix the manual transaxle assy.

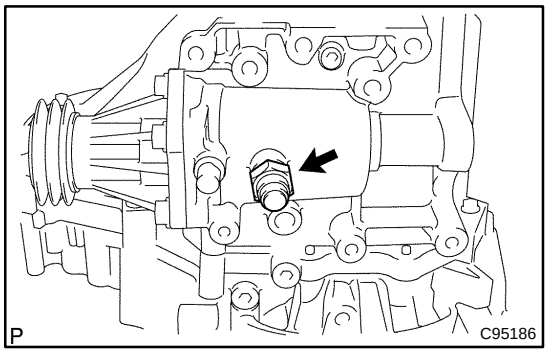

14. REMOVE LOCK BALL ASSY NO.1

(a) Remove the lock ball assy No.1 from the manual transmission case.

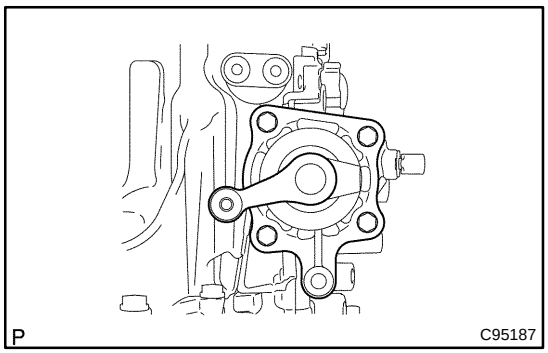

15. REMOVE SHIFT & SELECT LEVER SHAFT ASSY

(a) Remove the 4 bolts, shift & select lever shaft assy and gasket from the manual transmission case.

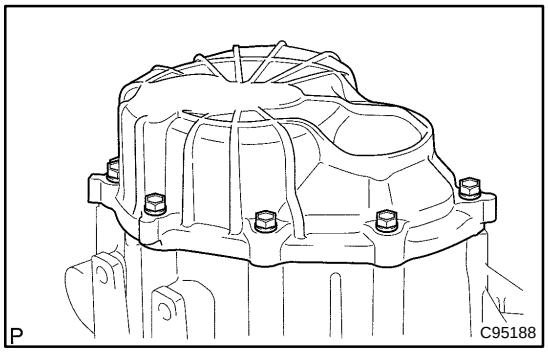

16. REMOVE MANUAL TRANSMISSION CASE COVER SUB–ASSY

(a) Remove the 9 bolts.

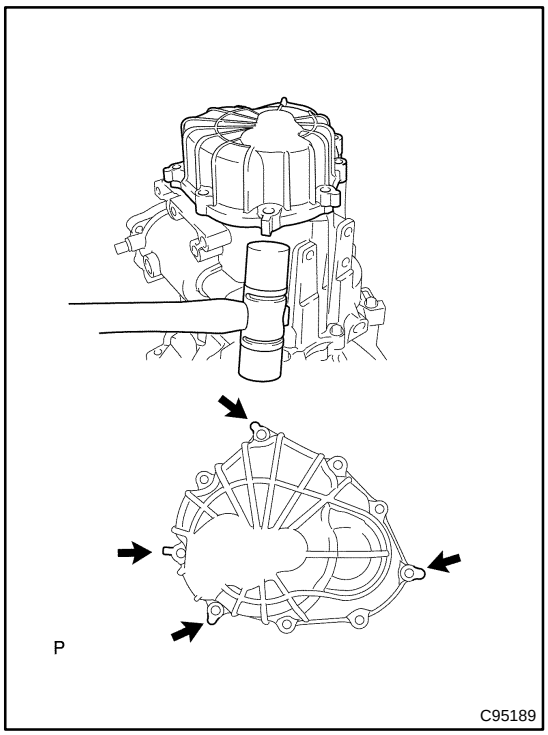

(b) Using a plastic hammer, carefully tap the projection of the manual transmission case cover sub–assy to remove it from the manual transmission case.

NOTICE:

Do not damage the manual transmission case.

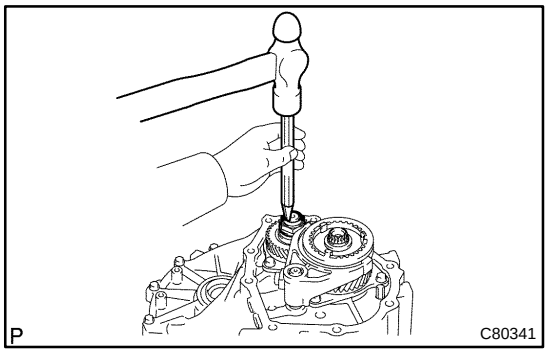

17. REMOVE MANUAL TRANSMISSION OUTPUT SHAFT REAR SET NUT

(a) Using a chisel and a hammer, loosen the staked part of the manual transmission output shaft rear set nut.

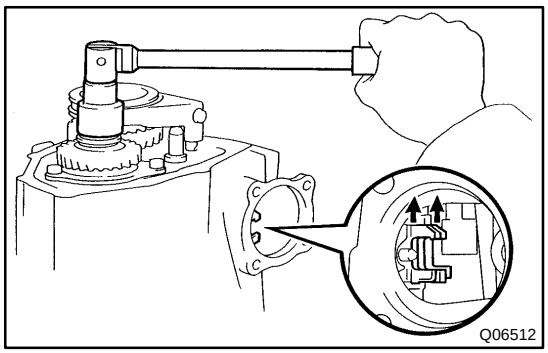

(b) Engage the gear to the double meshing.

(c) Remove the manual transmission output shaft rear set nut.

(d) Disengage the double mashing of the gear.

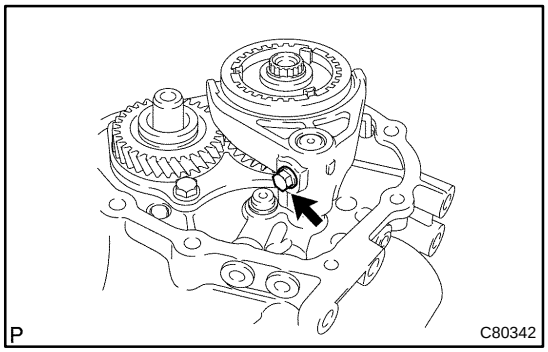

18. REMOVE GEAR SHIFT FORK NO.3

(a) Remove the gear shift fork lock bolt from the gear shift fork No.3.

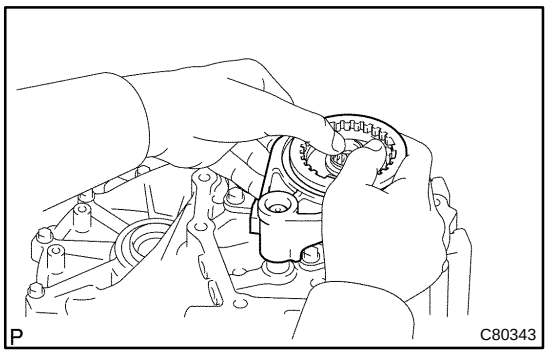

(b) Remove the transmission hub sleeve No.3 with gear shift fork No.3 from the transmission clutch hub No.3.

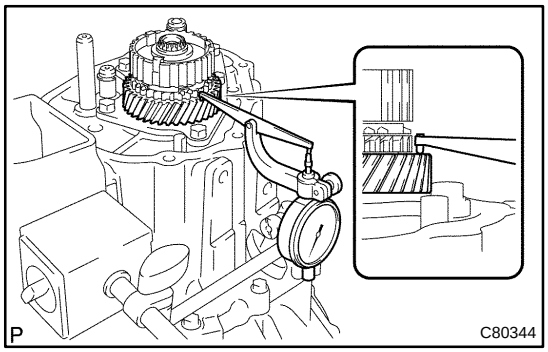

19. INSPECT 5TH GEAR THRUST CLEARANCE

(a) Using a dial indicator, measure the 5th gear thrust clearance.

5th gear thrust clearance:

Standard clearance: mm (in.)	Maximum clearance: mm (in.)
0.10 – 0.57 (0.0039 – 0.00224)	0.57 (0.0224)

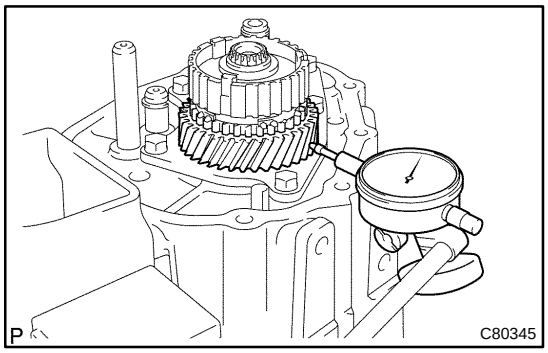

20. INSPECT 5TH GEAR RADIAL CLEARANCE

(a) Using a dial indicator, measure the 5th gear radial clearance.

5th gear radial clearance:

Standard clearance: mm (in.)	Maximum clearance: mm (in.)
KOYO made: 0.015 – 0.058 (0.0006 – 0.0023)	KOYO made: 0.058 (0.0023)
NSK made: 0.015 – 0.056 (0.0006 – 0.0022)	NSK made: 0.056 (0.0022)

If the clearance exceeds the maximum, replace the gear, needle roller bearing or shaft.

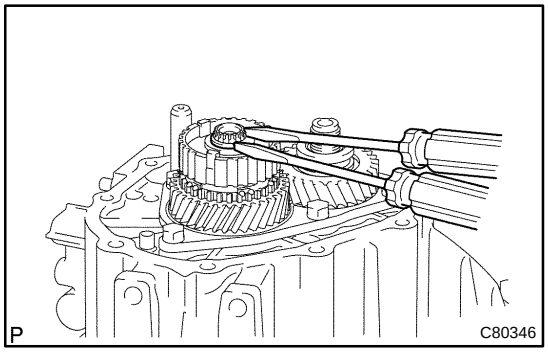

21. REMOVE TRANSMISSION CLUTCH HUB NO.3

(a) Using 2 screwdrivers and a hammer, tap out the snap ring.

HINT:

Using a waste to prevent the snap ring from being scattered.

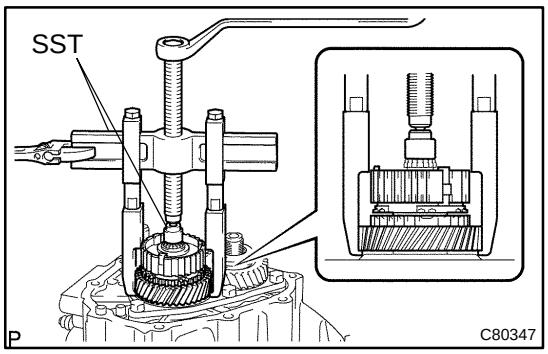

(b) Using SST, remove the transmission clutch hub No.3, 5th gear and synchronizer ring No.3 from the input shaft.
SST 09950–40011 (09951–04020, 09952–04010, 09953–04030, 09954–04010, 09955–04071, 09957–04010), 09950–60010 (09951–00200)

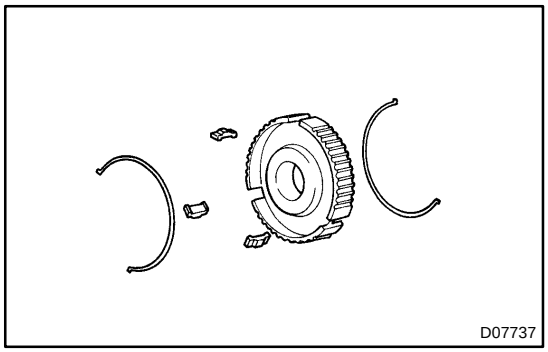

(c) Remove the 3 synchromesh shifting keys and 2 synchromesh shifting key springs from the transmission clutch hub No.3.

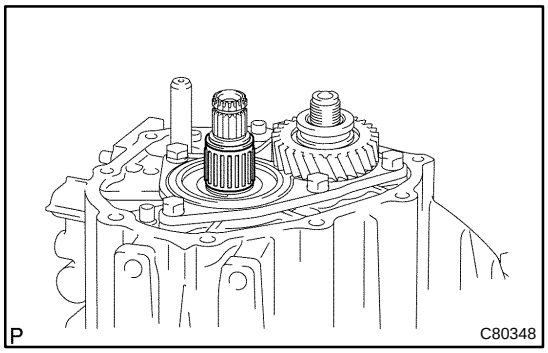

22. REMOVE 5TH GEAR NEEDLE ROLLER BEARING

(a) Remove the 5th gear needle roller bearing and 5th gear bearing spacer from the input shaft.

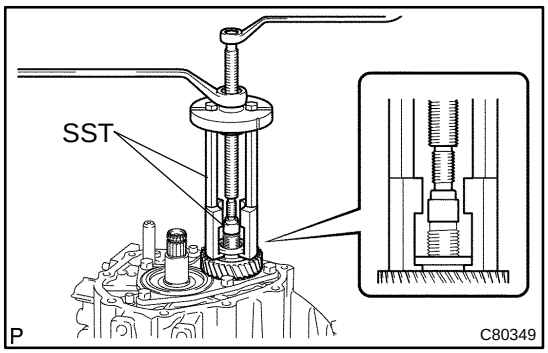

23. REMOVE 5TH DRIVEN GEAR

(a) Using SST, remove the 5th driven gear from the output shaft.
SST 09950–30012 (09951–03010, 09953–03010, 09954–03010, 09955–03011, 09957–04010), 09950–60010 (09951–00190)

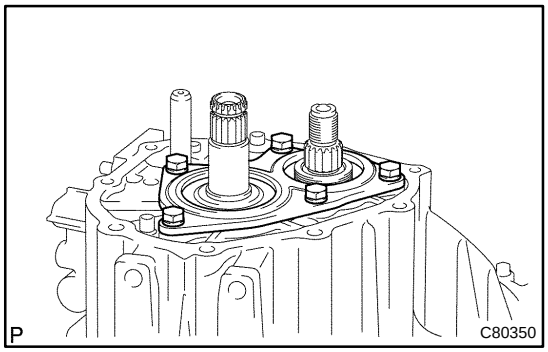

24. REMOVE BEARING RETAINER REAR (MTM)

(a) Remove the 5 bolts and bearing retainer rear (MTM) from the manual transmission case.

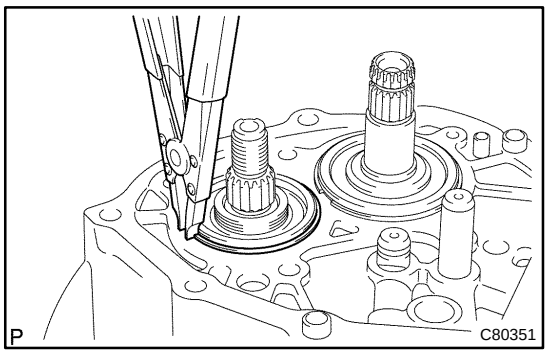

25. REMOVE OUTPUT SHAFT REAR BEARING HOLE SNAP RING

(a) Using a snap ring expander, remove the output shaft rear bearing hole snap ring from the output shaft.

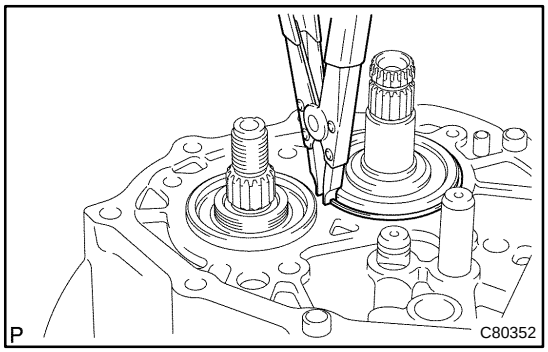

26. REMOVE INPUT SHAFT REAR BEARING HOLE SNAP RING

(a) Using a snap ring expander, remove the input shaft rear bearing hole snap ring from the input shaft.

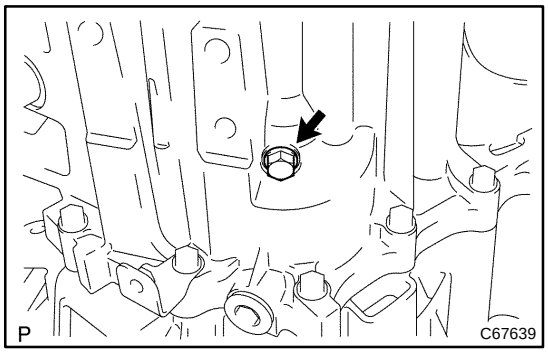

27. REMOVE REVERSE IDLER GEAR SHAFT BOLT

(a) Remove the reverse idler gear shaft bolt and gasket from the manual transmission case.

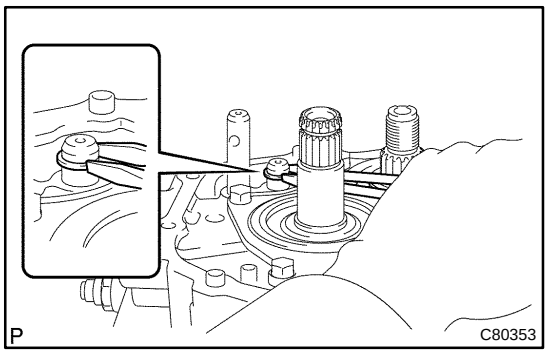

28. REMOVE SHIFT FORK SHAFT SHAFT SNAP RING

(a) Using 2 screwdrivers and a hammer, tap out the snap ring from the gear shift fork shaft No.2.

HINT:

Using a waste to prevent the snap ring from being scattered.

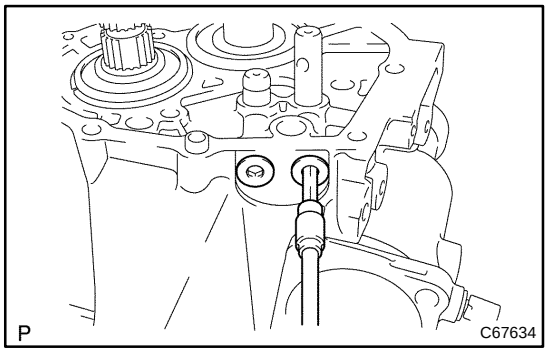

29. REMOVE SHIFT DETENT BALL

(a) Using a hexagon wrench, remove the 2 shift detent ball plugs from the manual transmission case.

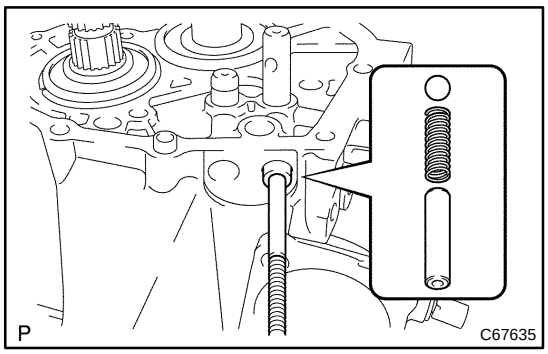

(b) Using a magnetic finger, remove the 2 seats, 2 springs and 2 shift detent balls from the manual transmission case.

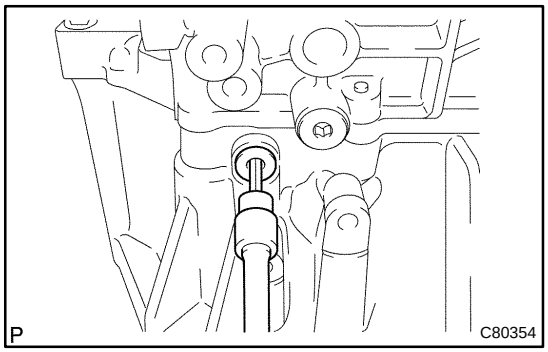

(c) Using a hexagon wrench, remove the shift detent ball plug from the transaxle case.

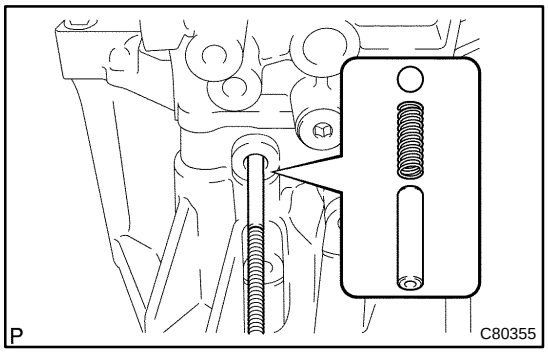

(d) Using a magnetic finger, remove the seat, spring and shift detent ball from the transaxle case.

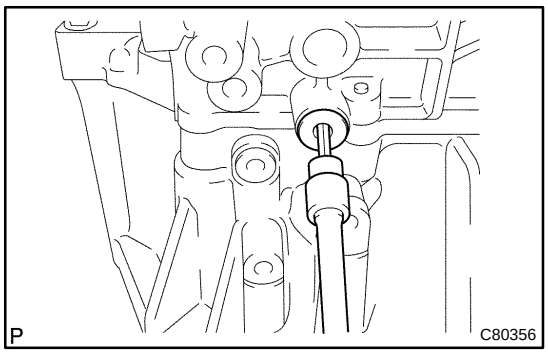

30. REMOVE LOCK BALL ASSY NO.1

(a) Using a hexagon wench, remove the lock ball assy No.1 from the manual transmission case.

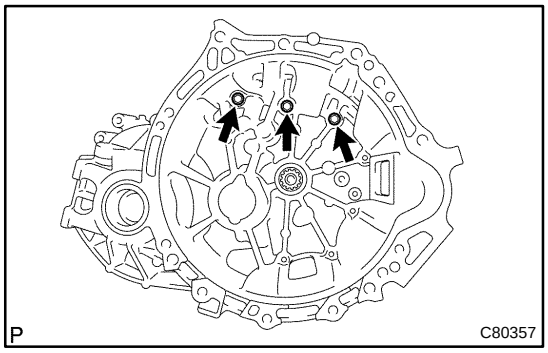

31. REMOVE MANUAL TRANSMISSION CASE

(a) Remove the 3 bolts from the transaxle case side.

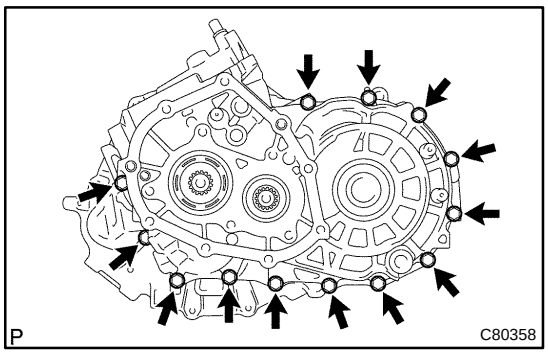

(b) Remove the 13 bolts from the manual transmission case side.

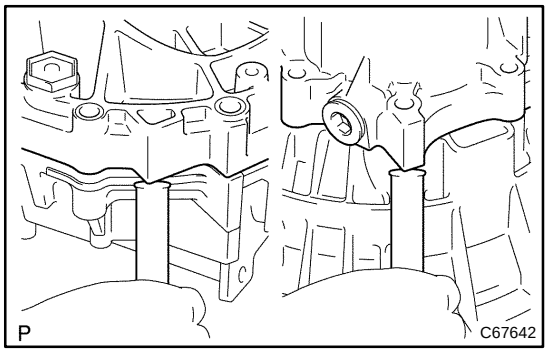

(c) Using a brass bar and a hammer, carefully tap the projection of the manual transmission case to remove it from the transaxle case.

NOTICE:

Do not damage the manual transmission case and transaxle case.

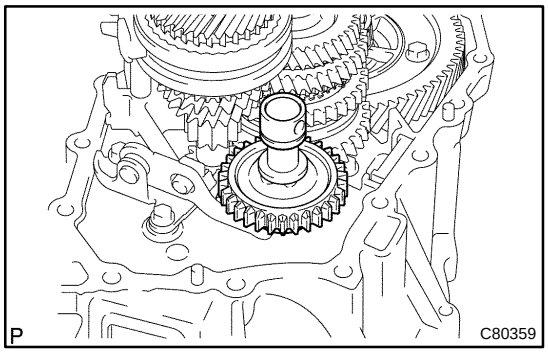

32. REMOVE REVERSE IDLER GEAR SUB–ASSY

(a) Remove the reverse idler gear sub–assy, thrust washer and reverse idler gear shaft from the transaxle case.

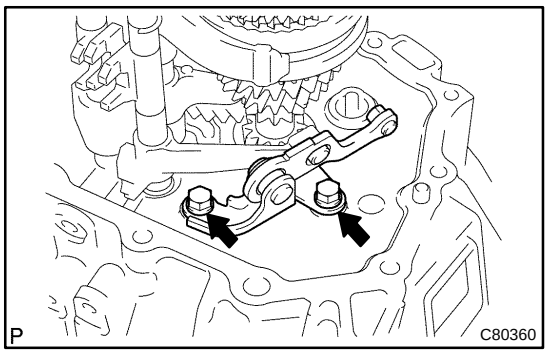

33. REMOVE REVERSE SHIFT ARM BRACKET ASSY

(a) Remove the 2 bolts and reverse shift arm bracket assy from the transaxle case.

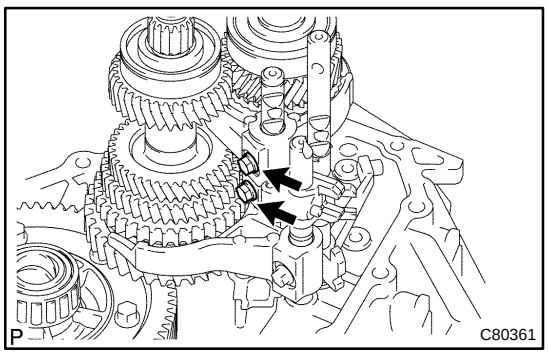

34. REMOVE GEAR SHIFT FORK SHAFT NO.2

(a) Remove the 2 bolts from the gear shift fork No. 2 and gear shift head No.1.

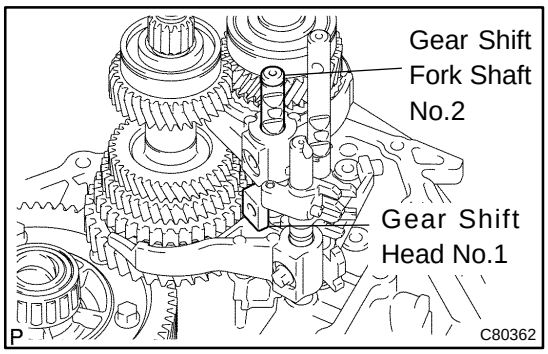

(b) Remove the gear shift fork shaft No.2 and gear shift head No.1 from the transaxle case.

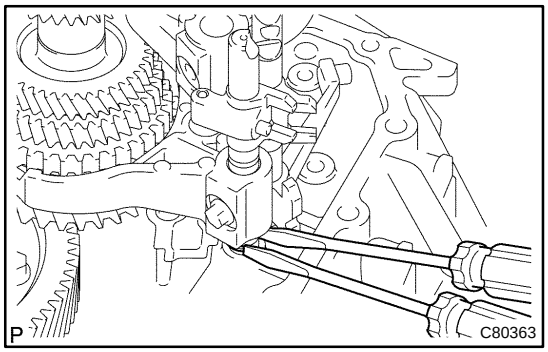

35. REMOVE GEAR SHIFT FORK SHAFT SUB–ASSY NO.1

(a) Using 2 screwdrivers and a hammer, tap out the snap rings.

HINT:

Using a waste to prevent the snap ring from being scattered.

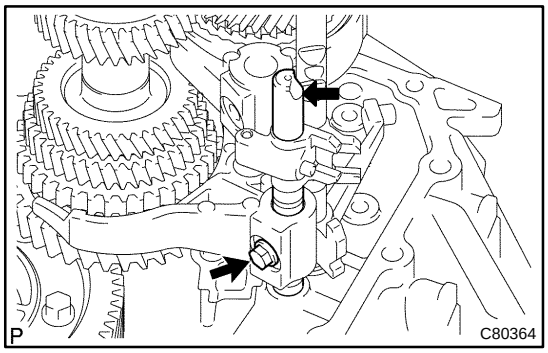

(b) Remove the gear shift fork lock bolt and gear shift fork shaft sub–assy No.1 from the gear shift fork No.1.

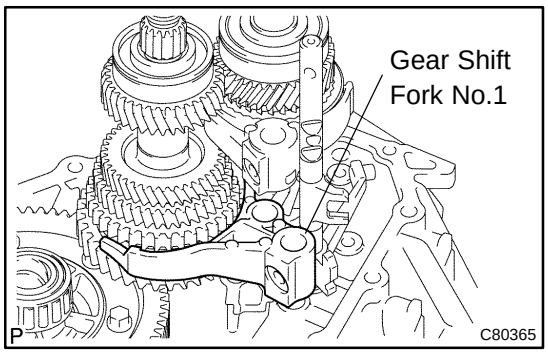

(c) Remove the gear shift fork No.1.

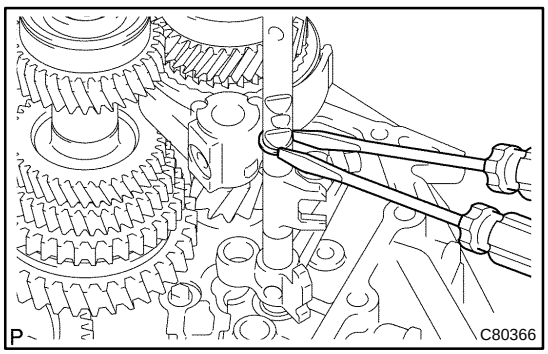

36. REMOVE GEAR SHIFT FORK SHAFT NO.3

(a) Using 2 screwdrivers and a hammer, tap out the snap ring from the gear shift fork shaft No.3.

HINT:

Using a waste to prevent the snap ring from being scattered.

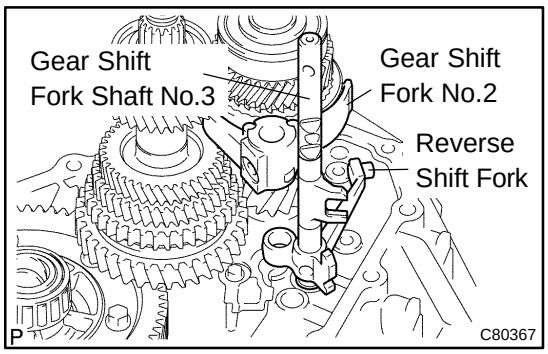

(b) Remove the shift fork shaft No.3 with reverse shift fork and gear shift fork No.2 from the transaxle case.

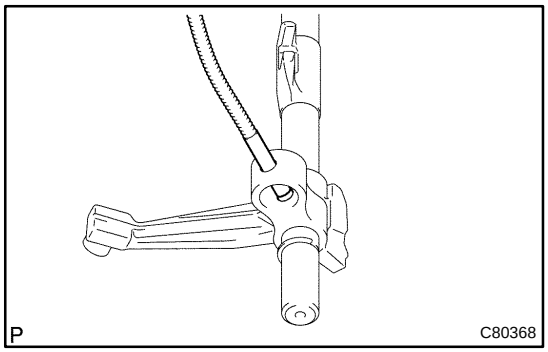

(c) Using a magnetic finger, remove the 2 balls from the reverse shift fork.

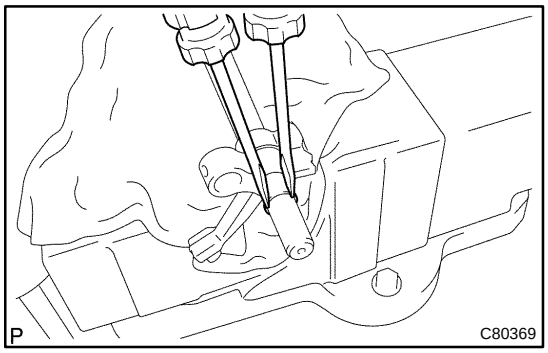

(d) Using 2 screwdrivers and a hammer, tap out the snap ring.

HINT:

Using a waste to prevent the snap ring from being scattered.

(e) Remove the reverse shift fork from the gear shift fork shaft No.3.

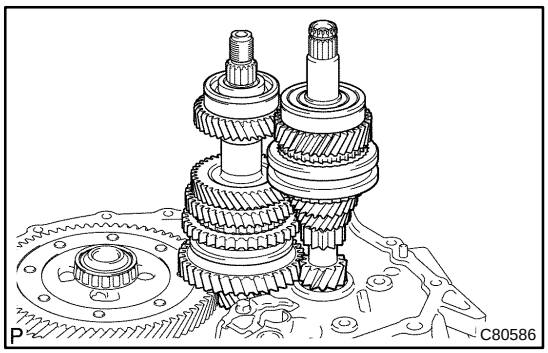

37. REMOVE INPUT SHAFT ASSY

(a) Remove the input and output shaft assy from the transaxle case.

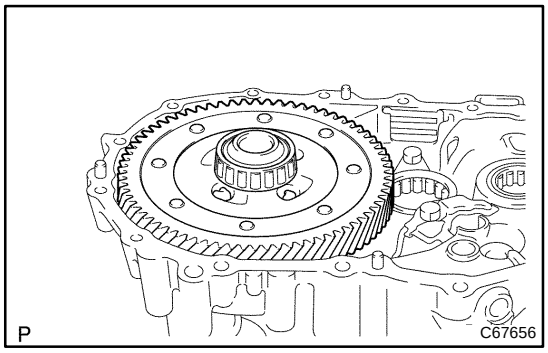

38. REMOVE DIFFERENTIAL CASE ASSY

(a) Remove the differential case assy from the transaxle case.

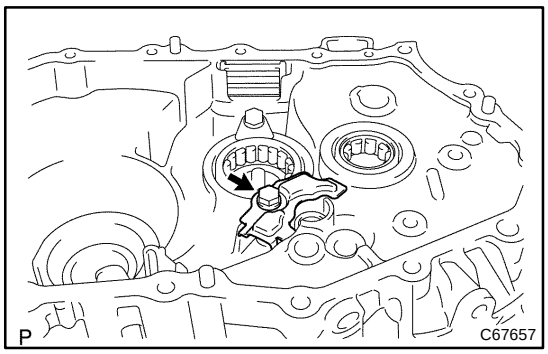

39. REMOVE MANUAL TRANSAXLE CASE RECEIVER

(a) Remove the bolt and manual transaxle case receiver from the transaxle case.

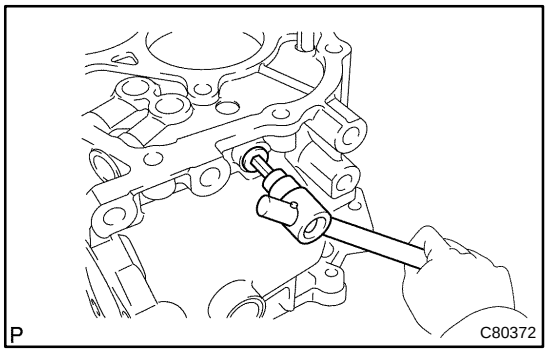

40. REMOVE REVERSE RESTRICT PIN ASSY

(a) Using a hexagon wrench, remove the reverse restrict pin plug from the manual transmission case.

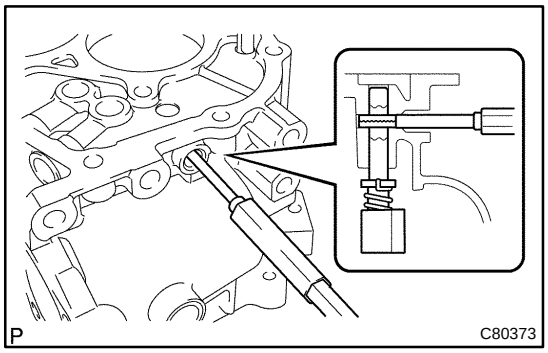

(b) Using a pin punch (ϕ 5 mm) and a hammer, drive out the slotted spring pin and remove the reverse restrict pin assy from the manual transmission case.

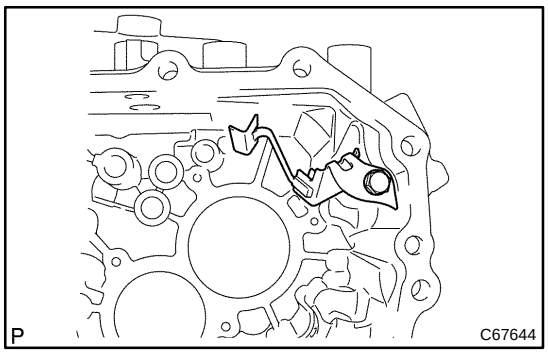

41. REMOVE OIL RECEIVER PIPE NO.1 (MTM)

(a) Remove the bolt and oil receiver pipe No.1 (MTM) from the manual transmission case.

NOTICE:

Be careful not to damage the oil receiver pipe No.1 (MTM).

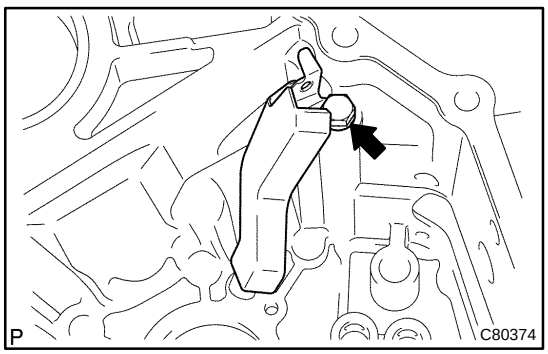

42. REMOVE OIL RECEIVER PIPE NO.2 (MTM)

(a) Remove the bolt and oil receiver pipe No.2 (MTM) from the manual transmission case.

NOTICE:

Be careful not to damage the oil receiver pipe No.2 (MTM).

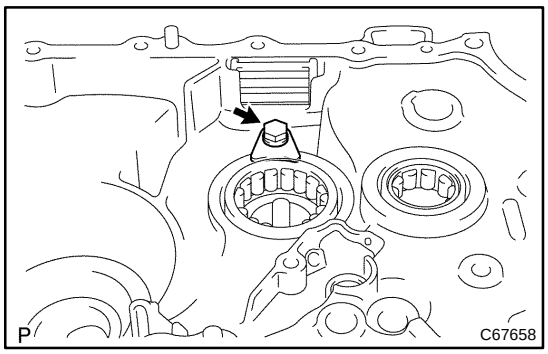

43. REMOVE BEARING LOCK PLATE

(a) Remove the bolt and bearing lock plate from the transaxle case.

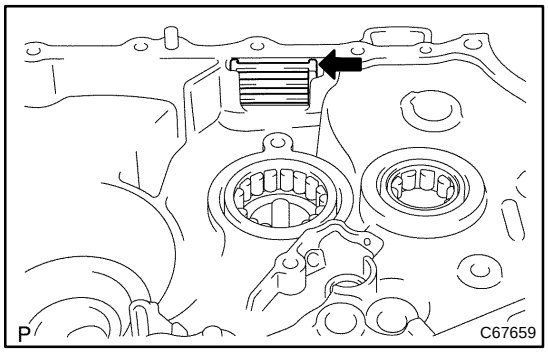

44. REMOVE TRANSMISSION MAGNET

(a) Remove the transmission magnet from the transaxle case.

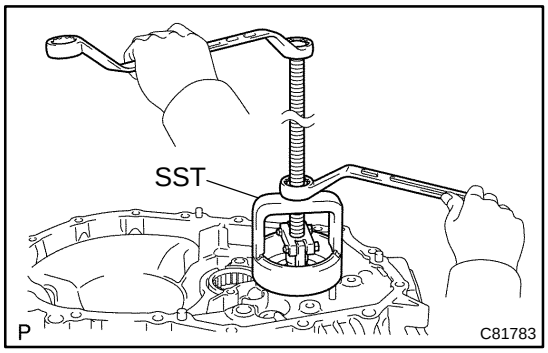

45. REMOVE INPUT SHAFT FRONT BEARING

(a) Using SST, remove the input shaft front bearing from the transaxle case.
SST 09612–65014 (09612–01050, 09612–01060)

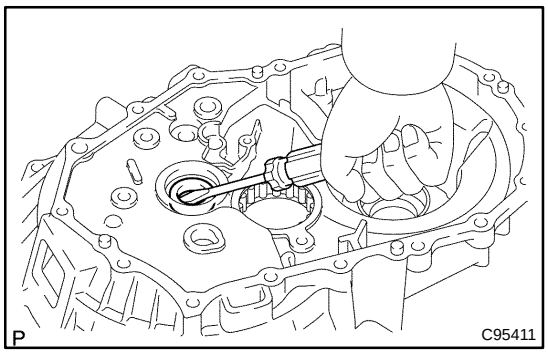

46. REMOVE FRONT TRANSAXLE CASE OIL SEAL

(a) Using a screwdriver, remove the front transaxle case oil seal from the transaxle case.

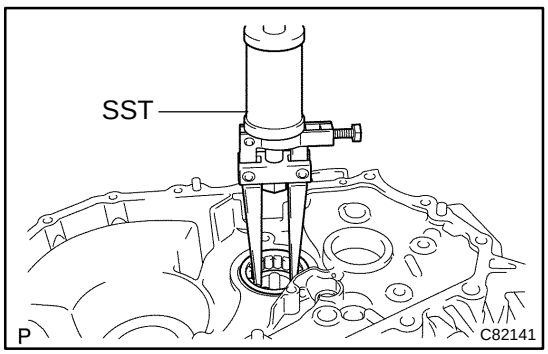

47. REMOVE OUTPUT SHAFT FRONT BEARING

(a) Using SST, remove the output shaft front bearing from the transaxle case.
SST 09308–00010

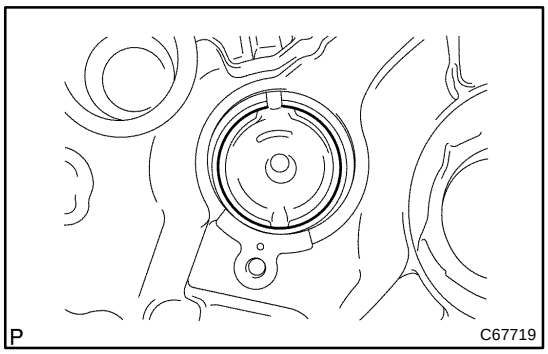

48. REMOVE OUTPUT SHAFT (MTM) COVER

(a) Remove the output shaft (MTM) cover from the transaxle case.

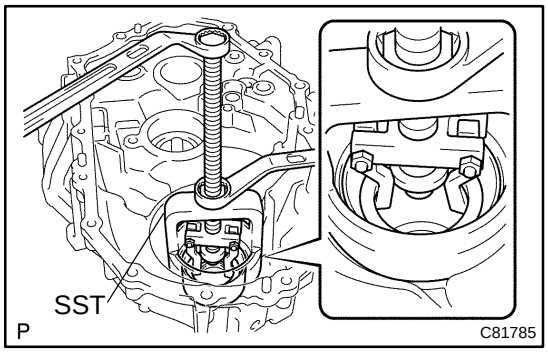

49. REMOVE FR DIFFERENTIAL CASE FRONT TAPERED ROLLER BEARING

(a) Using SST, remove the FR differential case front tapered roller bearing (outer race) and shim from the transaxle case.

SST 09612–65014 (09612–01040, 09612–01050)

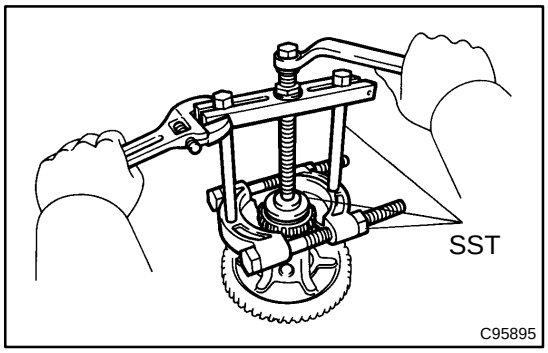

(b) Using SST, remove FR differential case front tapered roller bearing (inner race) from the front differential case.

SST 09950–00020, 09950–00030, 09950–40011 (09957–04010), 09950–60010 (09951–00360)

NOTICE:

Be careful not to damage bearing.

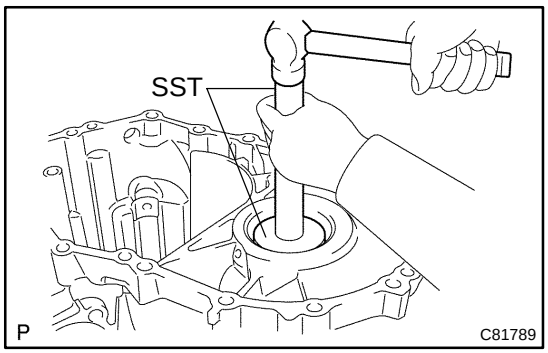

50. REMOVE TRANSAXLE CASE OIL SEAL

(a) Using SST and a hammer, drive out the transaxle case oil seal from the transaxle case.

SST 09950–60010 (09951–00530), 09950–70010 (09951–07150)

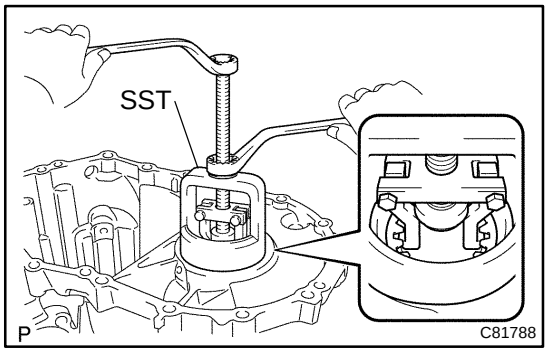

51. REMOVE FR DIFFERENTIAL CASE REAR TAPERED ROLLER BEARING

(a) Using SST, remove the FR differential case rear tapered roller bearing (outer race) and shim from the manual transmission case.

SST 09612–65014 (09612–01040, 09612–01050)

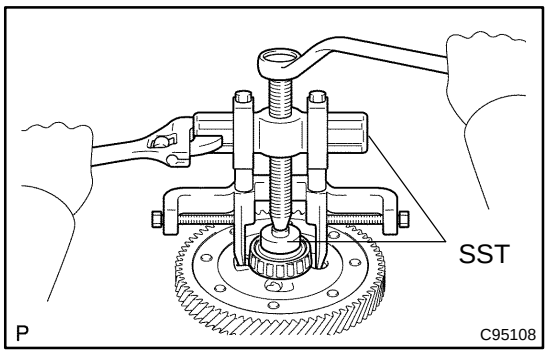

(b) Using SST and a hammer, remove the FR differential case rear tapered roller bearing (inner race) from the front differential case.

SST 09950–40011 (09951–04010, 09952–04010, 09953–04020, 09954–04010, 09955–04061, 09957–04010, 09958–04011), 09950–60010 (09951–00360)

NOTICE:

Be careful not to damage bearing.

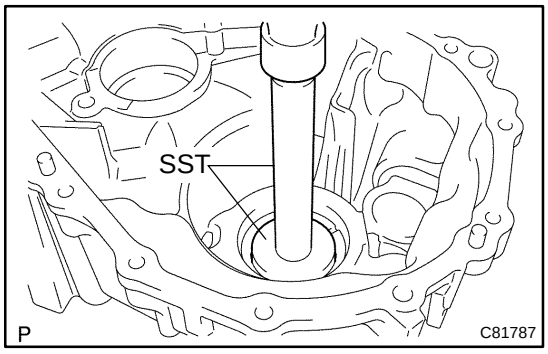

52. REMOVE TRANSMISSION CASE OIL SEAL

(a) Using SST and a hammer, remove the transmission case oil seal from the manual transmission case.

SST 09950–60010 (09951–00600), 09950–70010 (09951–07100)

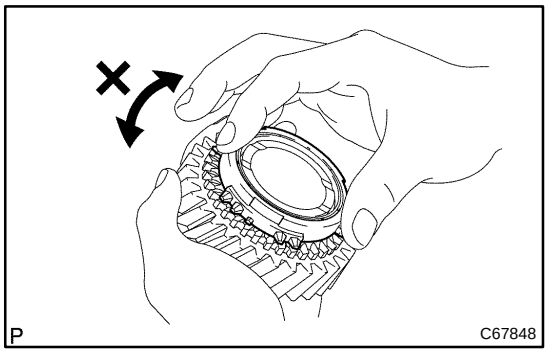

53. INSPECT SYNCHRONIZER RING NO.3

(a) Check for wear or damage.

(b) Check the braking effect of the synchronizer ring. Turn the synchronizer ring in one direction while pushing it to the gear cone, check that the ring locks.

If the braking effect is insufficient, apply a small amount of the fine lapping compound between the synchronizer ring and gear cone. Lightly rub the synchronizer ring and gear cone together.

NOTICE:

Ensure the file lapping compound is completely washed off after rubbing.

(c) Check again the breaking effect of the synchronizer ring.

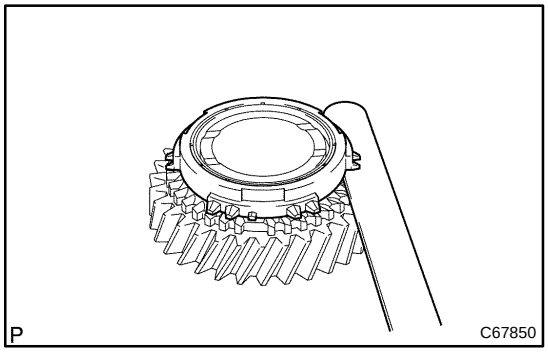

(d) Using a feeler gauge, measure the clearance between the synchronizer ring back and gear spline end.

Minimum clearance: 0.75 mm (0.0295 in.)

If the clearance is less than minimum, replace the synchronizer ring and gear cone by applying a small amount of the fine lapping compound on gear cone.

NOTICE:

Ensure the fine lapping compound is completely washed off after rubbing.

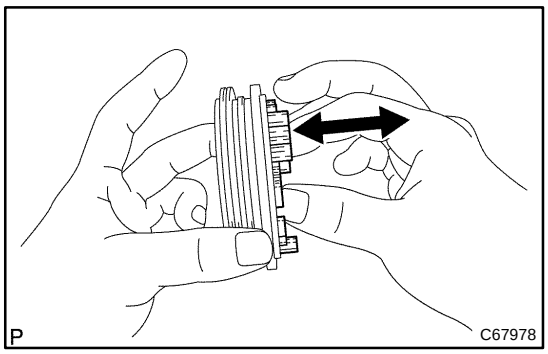

54. INSPECT TRANSMISSION HUB SLEEVE NO.3

(a) Check the sliding condition between the transmission hub sleeve No. 3 and transmission clutch hub No.3.

(b) Check that spline gear's of the transmission hub sleeve No.3 is not worn down.

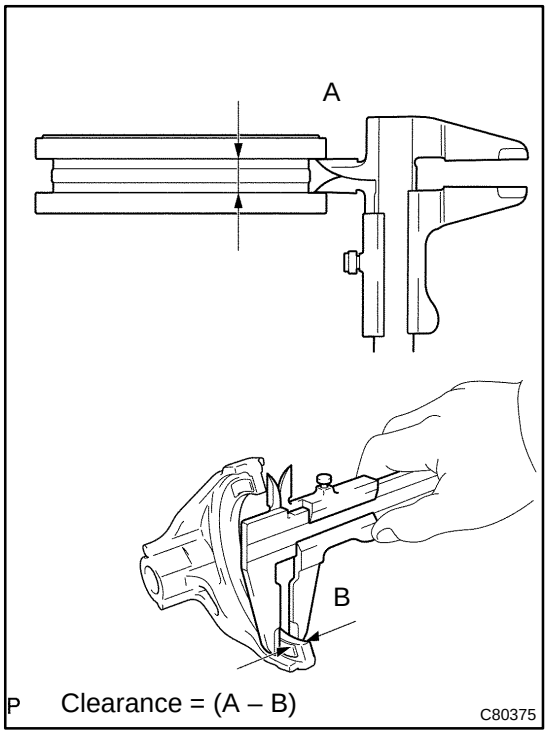

(c) Using a vernier calipers, inspect the transmission hub sleeve No.3 and gear shift fork No.3 as shown in the illustration.

Standard clearance:

0.3 – 0.5 mm (0.012 – 0.0197 in.)

If the clearance is out of specification, replace the transmission hub sleeve No.3 and gear shift fork No.3.

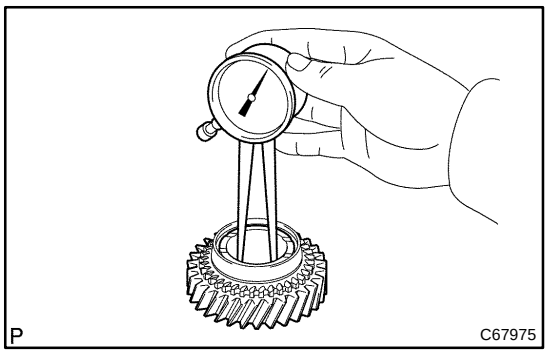

55. INSPECT 5TH GEAR

(a) Using a caliper gauge, inspect 5th gear as shown in the illustration.

5th gear inner diameter:

Standard inner diameter: mm (in.)	Maximum inner diameter: mm (in.)
29.915 – 29.931 (1.1778 – 1.1784)	29.931 (1.1784)

If the inner diameter exceeds the maximum, replace the 5th gear.

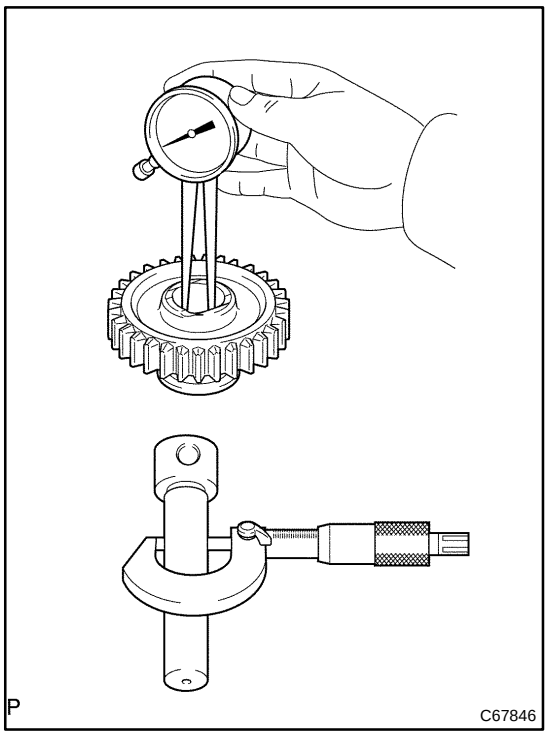

56. INSPECT REVERSE IDLER GEAR SUB–ASSY

(a) Using a caliper gauge, inspect the reverse idler gear sub–assy as shown in the illustration.

Reverse idler gear sub–assy inner diameter:

Standard inner diameter: mm (in.)	Maximum inner diameter: mm (in.)
18.040 – 18.058 (0.7102 – 0.7109)	18.058 (0.7109)

If the inner diameter exceeds the maximum, replace the reverse idler gear sub–assy.

(b) Using a micrometer, inspect the reverse idler gear shaft as shown in the illustration.

Reverse idler gear shaft outer diameter:

Standard inner diameter: mm (in.)	Minimum outer diameter: mm (in.)
17.966 – 17.984 (0.7073 – 0.7080)	17.966 (0.7073)

If the outer diameter is below the minimum, replace the reverse idler gear shaft.

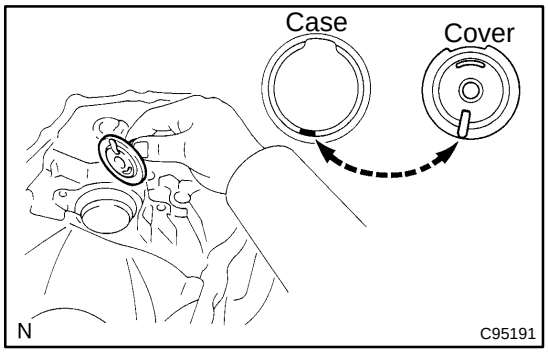

57. INSTALL OUTPUT SHAFT (MTM) COVER

(a) Coat the output shaft (MTM) cover with MP grease, install it to the transaxle case.

NOTICE:

Install the output shaft (MTM) cover projection into the case side hollow.

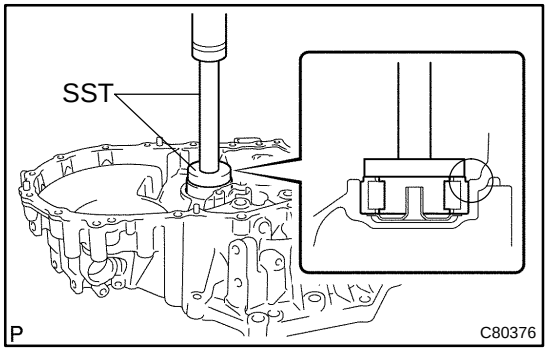

58. INSTALL OUTPUT SHAFT FRONT BEARING

(a) Coat a new output shaft front bearing with gear oil, using SST and a press, install it to the transaxle case.

SST 09950–60010 (09951–00550), 09950–70010 (09951–07150)

NOTICE:

- **Be sure to install a new bearing in the correct direction, as shown in the illustration.**
- **When replacing the output shaft front bearing, replace the output shaft front bearing inner race along with it.**

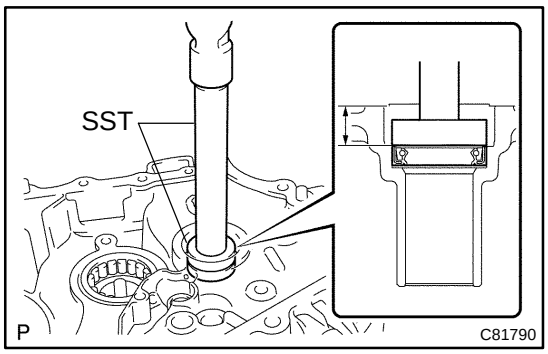

59. INSTALL FRONT TRANSAXLE CASE OIL SEAL

(a) Using SST and a hammer, install a new front transaxle case oil seal to the transaxle case.

SST 09950–60010 (09951–00370), 09950–70010 (09951–07150)

Drive in depth: 15.6 – 16.0 mm (0.6142 – 0.6299 in.)

(b) Coat the lip of the front transaxle case oil seal with MP grease.

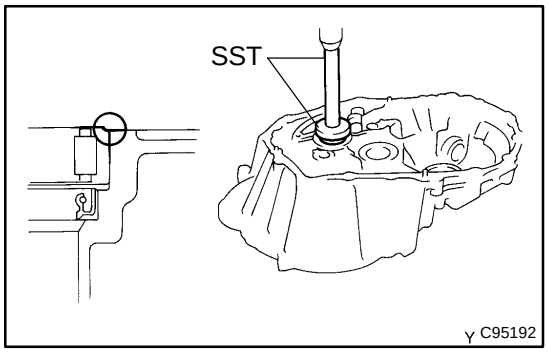

60. INSTALL INPUT SHAFT FRONT BEARING

(a) Coat a new input shaft front bearing with MP grease, using SST and a press, install it to the transaxle case.

SST 09950–60010 (09951–00420), 09950–70010 (09951–07150)

Drive in depth: 0 – 0.3 mm (0 – 0.012 in.)

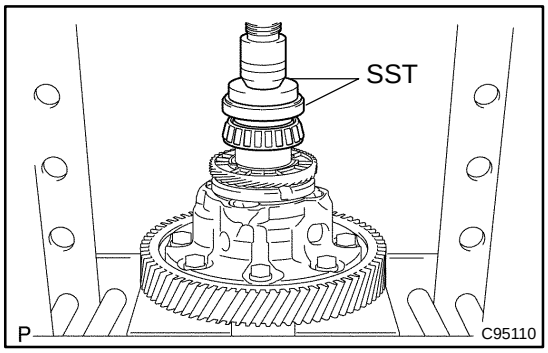

61. INSTALL FR DIFFERENTIAL CASE FRONT TAPERED ROLLER BEARING

(a) Using SST and a press, install a new FR differential case front tapered roller bearing (inner race) to the front differential case.

SST 09350–32014 (09351–32120), 09950–60010 (09951–00530)

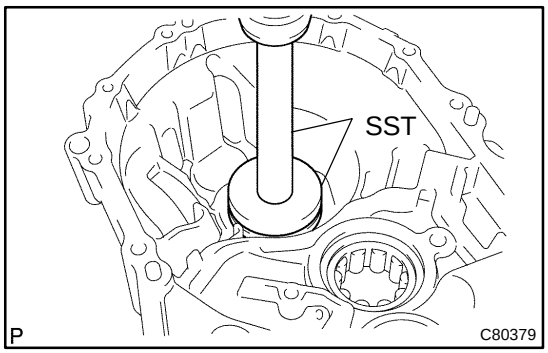

(b) Using SST and a press, install a new FR differential case front tapered roller bearing (outer race) with shim to the transaxle case.

SST 09950–60020 (09951–00680), 09950–70010 (09951–07150)

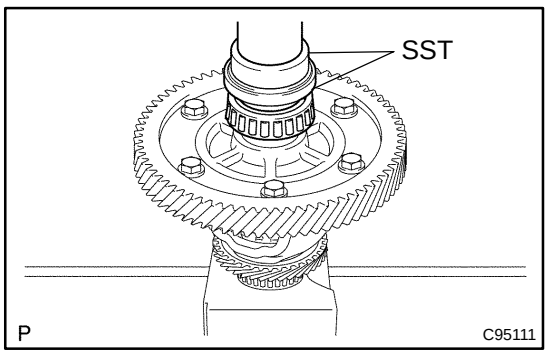

62. INSTALL FR DIFFERENTIAL CASE REAR TAPERED ROLLER BEARING

(a) Using SST and a press, install a new FR differential case rear tapered roller bearing (inner race) to the front differential case.

SST 09350–32014 (09351–32120), 09950–60010 (09951–00530)

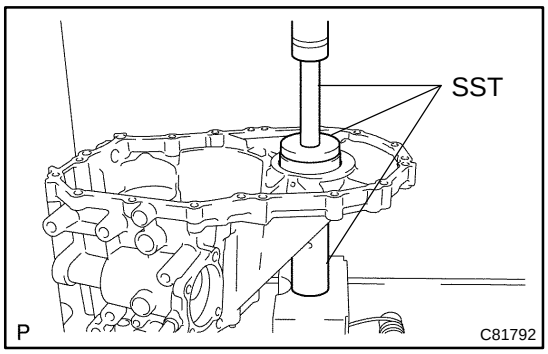

(b) Using SST and a press, install a new FR differential case rear tapered roller bearing (outer race) with shim to the manual transmission case.
SST 09309–36010, 09950–60020 (09951–00710), 09950–70010 (09951–07150)

HINT:
Use a shim of the same thickness with the removed one.

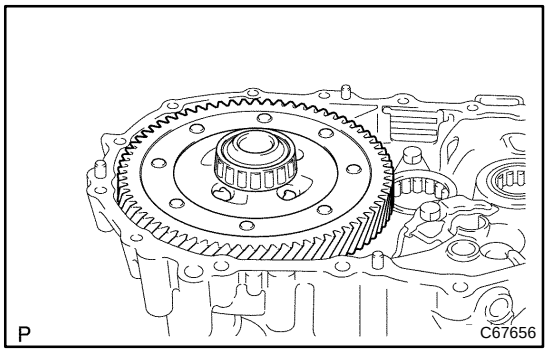

63. ADJUST DIFFERENTIAL SIDE BEARING RRELOAD

(a) Coat the differential case assy with gear oil, install it to the transaxle case.

(b) Install the manual transmission case with 16 bolts.
Torque: 29.4 N·m (300 kgf·cm, 22 ft·lbf)

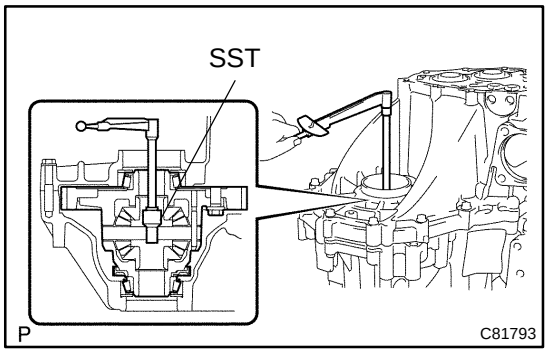

(c) Using SST and a torque wrench, turn the differential case assy to the right and left 2 or 3 times to allow the bearings to settle.
SST 09564–32011

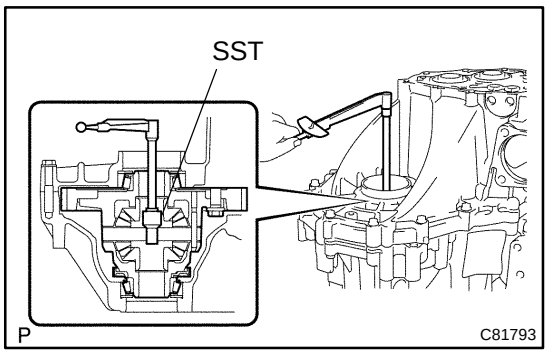

(d) Using SST and a torque wrench, measure the preload.
SST 09564–32011
Preload (at starting):
New bearing:
0.78 – 1.57 N·m (8 – 16 kgf·cm, 6.9 – 13.9 in.·lbf)

If the preload is out of specification, select another shim.

Shim thickness:

Mark	Thickness: mm (in.)	Mark	Thickness: mm (in.)
AA	2.10 (0.0827)	LL	2.60 (0.1024)
BB	2.15 (0.0846)	MM	2.65 (0.1043)
CC	2.20 (0.0866)	NN	2.70 (0.1063)
DD	2.25 (0.0886)	PP	2.75 (0.1083)
EE	2.30 (0.0906)	QQ	2.80 (0.1102)
FF	2.35 (0.0925)	RR	2.85 (0.1122)
GG	2.40 (0.0945)	SS	2.90 (0.1142)
HH	2.45 (0.0965)	TT	2.95 (0.1161)
JJ	2.50 (0.0984)	UU	3.00 (0.1181)
KK	2.55 (0.1004)	–	–

HINT:
The preload will change by about 0.3 – 0.4 N·m (3 – 4 kgf·cm, 2.6 – 3.5 in.·lbf) corresponding to a change of 0.05 mm (0.0020 in.) in shim thickness.

(e) Remove the 16 bolts and manual transmission case from the transaxle case.

(f) Remove the differential case assy from the transaxle case.

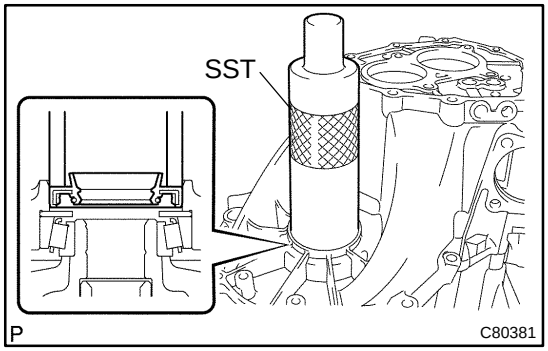

64. INSTALL TRANSMISSION CASE OIL SEAL

(a) Using SST and a hammer, install a new transmission case oil seal to the manual transmission case.
SST 09316–60011 (09316–00011)
Drive in depth: 9.9 ± 0.3 mm (0.390 ± 0.012 in.)

(b) Coat the lip of the transmission case oil seal with MP grease.

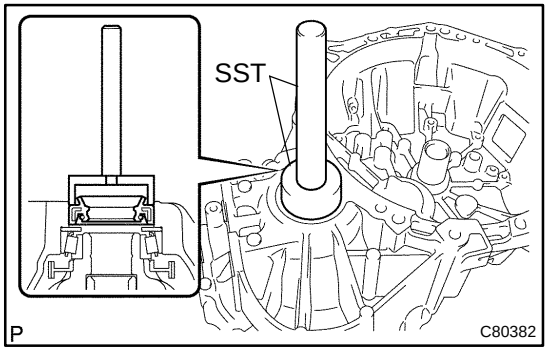

65. INSTALL TRANSAXLE CASE OIL SEAL

(a) Using SST and a hammer, install a new transaxle case oil seal in the transaxle case.
SST 09710–20011 (09710–06071), 09950–70010 (09951–07150)
Drive in depth: 1.9 ± 0.3 mm (0.075 ± 0.012 in.)

(b) Coat the lip of the transaxle case oil seal with MP grease.

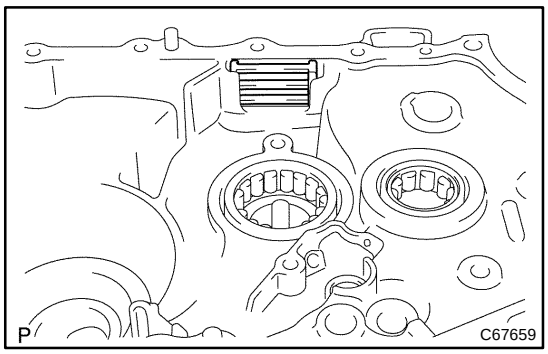

66. INSTALL TRANSMISSION MAGNET

(a) Clean the transmission magnet, install it to the transmission case.

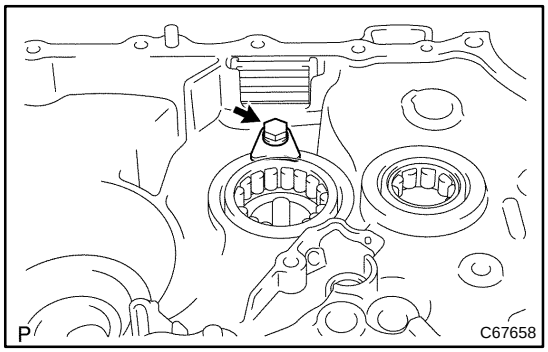

67. INSTALL BEARING LOCK PLATE

(a) Install the bearing lock plate with the bolt.
Torque: 11.3 N·m (115 kgf·cm, 8 ft·lbf)

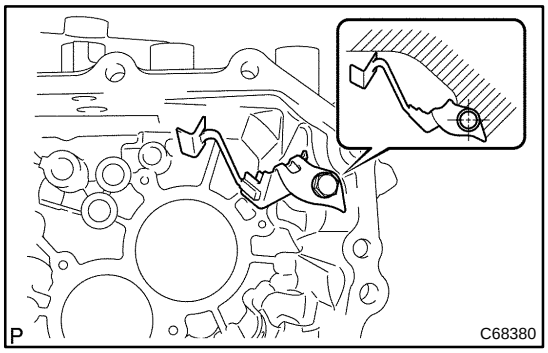

68. INSTALL OIL RECEIVER PIPE NO.1 (MTM)

(a) Install the oil receiver pipe No.1 (MTM) with bolt to the manual transmission case.
Torque: 17.2 N·m (175 kgf·cm, 13 ft·lbf)

NOTICE:

- **Prevent the oil receiver pipe No.1 (MTM) from being deformed.**
- **Install the oil receiver pipe No.1 (MTM) while placing it against the manual transmission case, as shown in the illustration.**

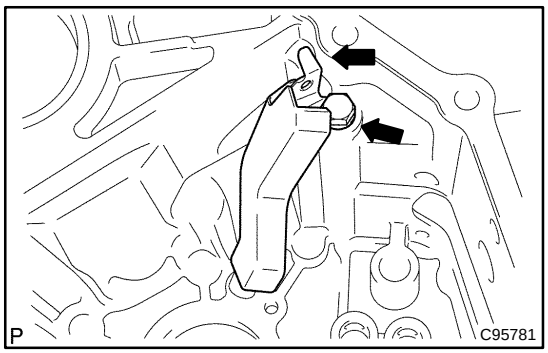

69. INSTALL OIL RECEIVER PIPE NO.2 (MTM)

(a) Install the oil receiver pipe No.2 (MTM) with bolt to the manual transmission case.
Torque: 17.2 N·m (175 kgf·cm, 13 ft·lbf)

NOTICE:

- **Prevent the oil receiver pipe No.2 (MTM) from being deformed.**
- **Install the oil receiver pipe No.2 (MTM) while placing it against the manual transmission case, as shown in the illustration.**

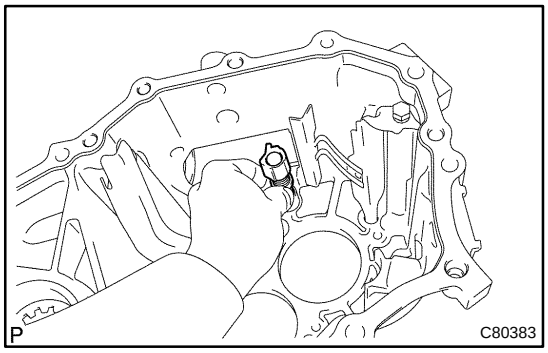

70. INSTALL REVERSE RESTRICT PIN ASSY

(a) Install the reverse restrict pin assy to the manual transmission case.

NOTICE:

Do not set the reverse restrict pin assy in incorrect orientation.

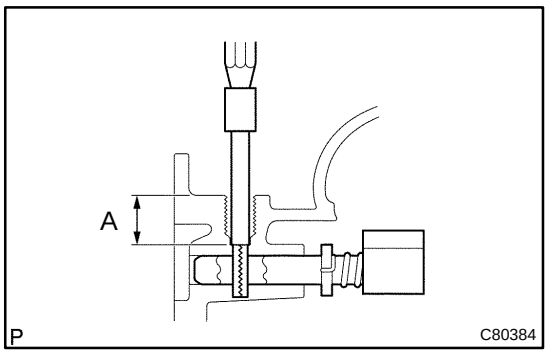

(b) Using a pin punch (ϕ 5 mm) and hammer, install the slotted pin to the reverse restrict pin assy.
Standard clearance (A):
15.5 – 16.5 mm (0.6102 – 0.6496 in.)

(c) Apply sealant to the reverse restrict pin plug.
Sealant:
Part No. 08833–00080, THREE BOND 1344, LOCTITE 242 or equivalent

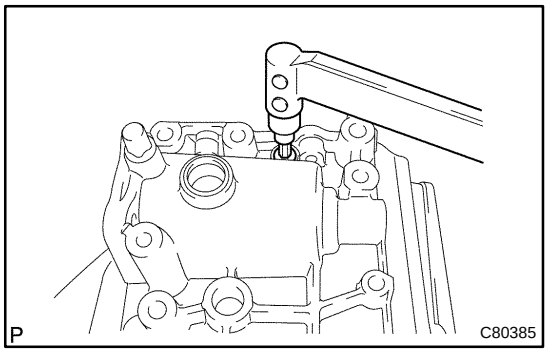

(d) Using a hexagon wrench and a torque wrench, install the reverse restrict pin plug to the manual transmission case.
Torque: 12.7 N·m (130 kgf·cm, 9 ft·lbf)

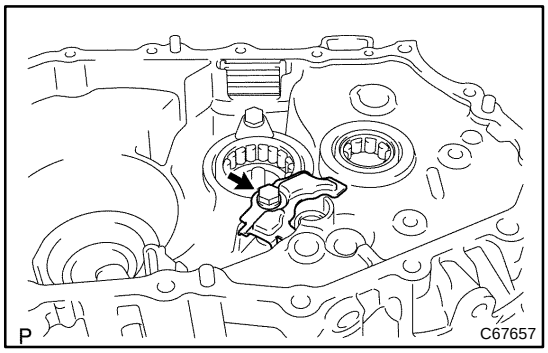

71. INSTALL MANUAL TRANSAXLE CASE RECEIVER

(a) Install the manual transaxle case receiver with the bolt to the transaxle case.
Torque: 11.3 N·m (115 kgf·cm, 8 ft·lbf)

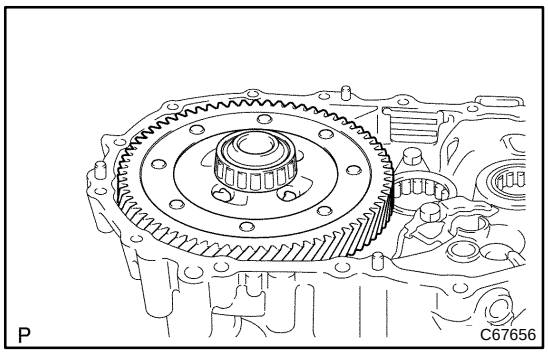

72. INSTALL DIFFERENTIAL CASE ASSY

(a) Coat the differential case tapered roller bearing with gear oil, install the differential case assy to the transaxle case.

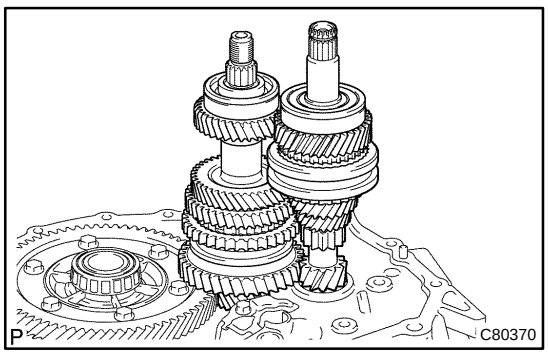

73. INSTALL INPUT SHAFT ASSY

(a) Coat the sliding and rotating surface of the input and out put shafts with gear oil, install them to the transaxle case.

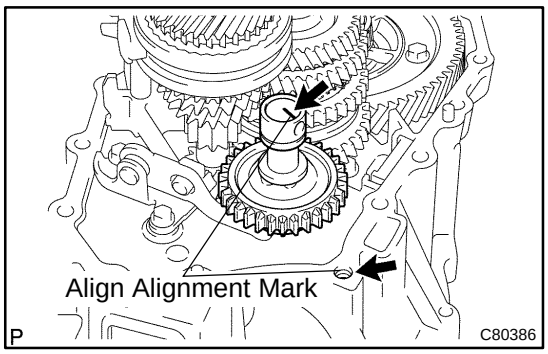

74. INSTALL REVERSE IDLER GEAR SUB–ASSY

(a) Coat the reverse idler gear sub–assy, thrust washer and reverse idler gear shaft with gear oil, install them as shown in the illustration.

HINT:

Align the mark on the reverse idler gear shaft with the bolt hole shown in the illustration.

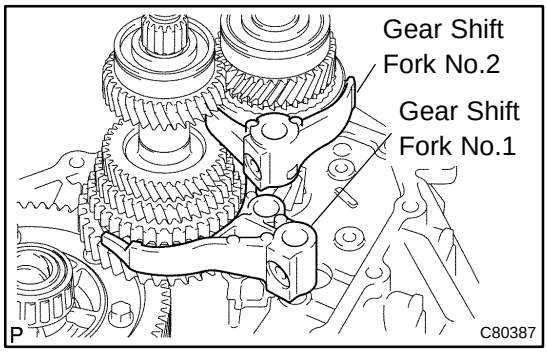

75. INSTALL GEAR SHIFT FORK SHAFT SUB–ASSY NO.1

(a) Coat the gear shift fork No.1 and gear shift fork No.2 with gear oil, install them.

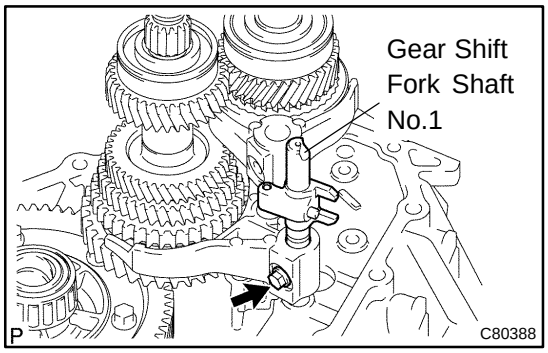

(b) Coat the gear shift fork shaft sub–assy No.1 with gear oil, install it.

(c) Apply sealant to the shift fork lock bolt.
Sealant:
Part No. 08833–00080, THREE BOND 1344, LOCTITE 242 or equivalent

(d) Install the gear shift fork lock bolt.
Torque: 15.7 N·m (160 kgf·cm, 12 ft·lbf)

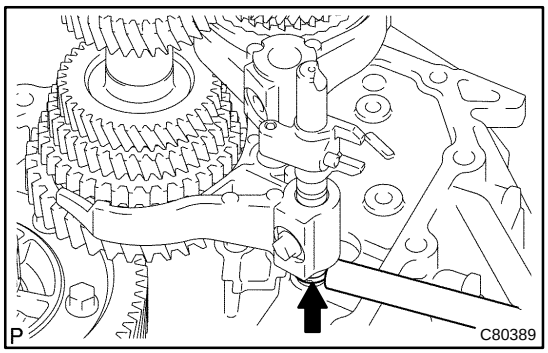

(e) Using a brass bar and a hammer, install the shaft snap ring to the gear shift fork shaft No.1.

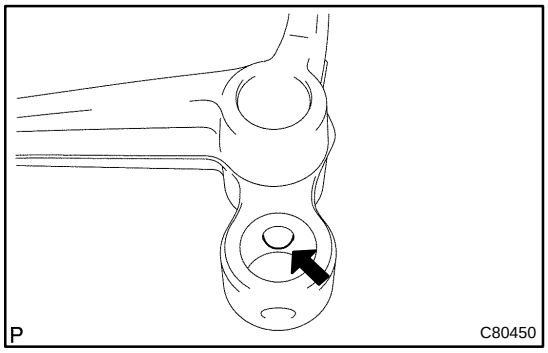

76. INSTALL GEAR SHIFT FORK SHAFT NO.3

(a) Coat the 2 balls with MP grease, install them to the reverse shift fork.

(b) Install the reverse shift fork to the gear shift fork shaft No.3.

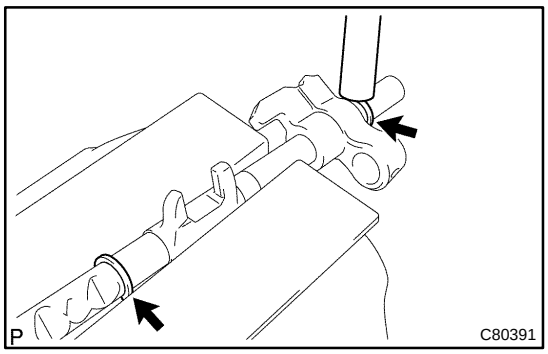

(c) Using a brass bar and a hammer, install the 2 shift fork shaft snap rings to the gear shift fork shaft No.3.

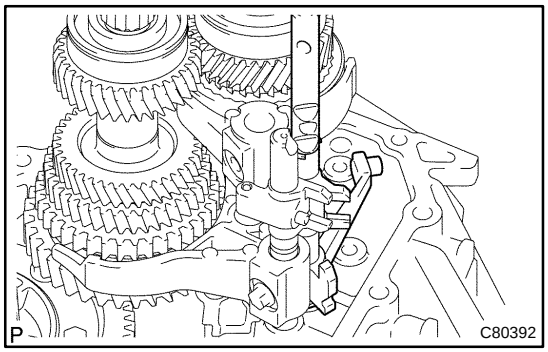

(d) Coat the gear shift fork shaft No.3 with gear oil, install it.

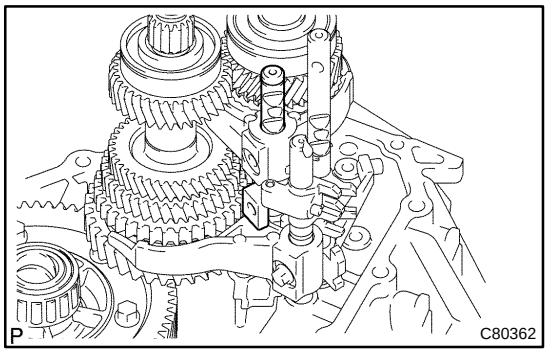

77. INSTALL GEAR SHIFT FORK SHAFT NO.2

(a) Coat the gear shift head No.1 and gear shift fork shaft No.2 with gear oil, install them.

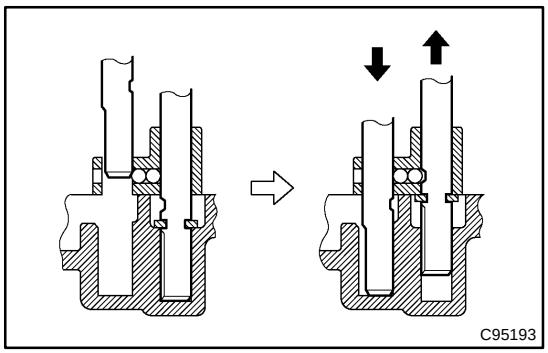

NOTICE:
To avoid the interference of the 2 shift fork balls, lift up the gear shift fork shaft NO.3 at the position shown in the illustration.

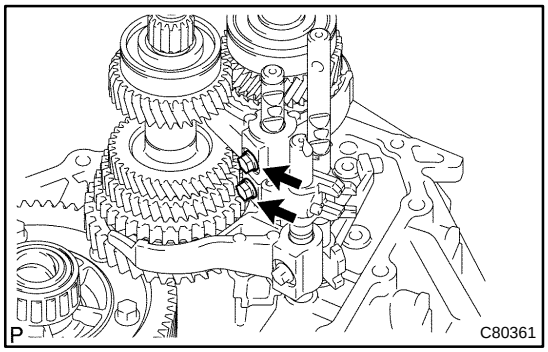

(b) Coat the 2 shift lock bolts with sealant, install then to the gear shift fork No.2 and gear shift head No.1.
Sealant:
Part No. 08833–00080, THREE BOND 1344, LOCTITE 242 or equivalent
Torque: 15.7 N·m (160 kgf·cm, 12 ft·lbf)

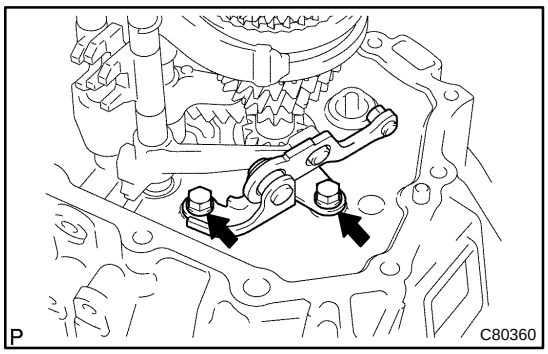

78. INSTALL REVERSE SHIFT ARM BRACKET ASSY

(a) Install the reverse shift arm bracket assy with 2 bolts to the transaxle case.
Torque: 17.2 N·m (175 kgf·cm, 13 ft·lbf)

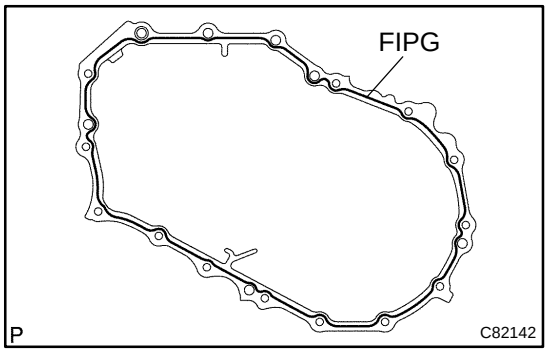

79. INSTALL MANUAL TRANSMISSION CASE

(a) Apply FIPG to the manual transmission case, as shown in the illustration.
FIPG:
Part No. 08826–00090, THREE BOND 1281 or equivalent

NOTICE:
Parts must be assembled within 10 minutes of application. Otherwise, the packing (FIPG) material must be removed and reapplied.

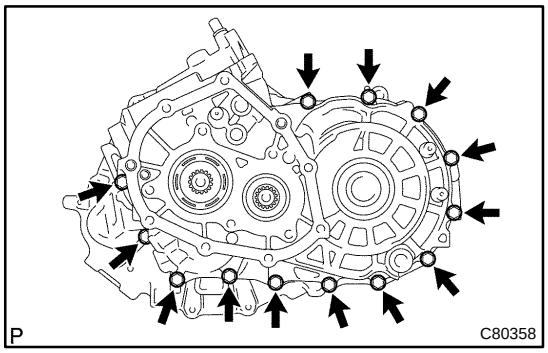

(b) Coat the 13 bolts with sealant, install them to the manual transmission case.
Sealant:
Part No. 08833–00080, THREE BOND 1344, LOCTITE 242 or equivalent
Torque: 29.4 N·m (300 kgf·cm, 22 ft·lbf)

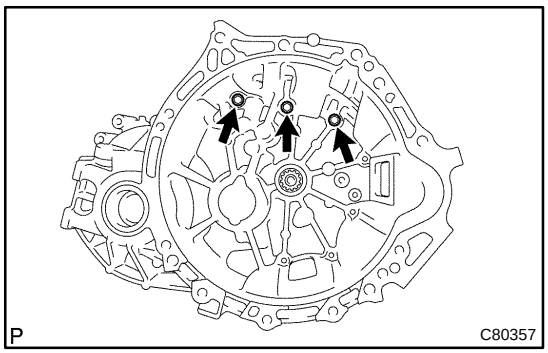

(c) Coat the 3 bolts with sealant, install them to the transaxle case.
Sealant:
Part No. 08833–00080, THREE BOND 1344, LOCTITE 242 or equivalent
Torque: 29.4 N·m (300 kgf·cm, 22 ft·lbf)

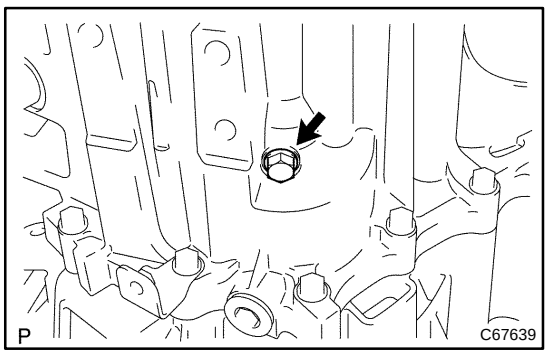

80. INSTALL REVERSE IDLER GEAR SHAFT BOLT

(a) Coat the reverse idler gear shaft bolt with sealant, install it with a new gasket.
Sealant:
Part No. 08833–00080, THREE BOND 1344, LOCTITE 242 or equivalent
Torque: 29.4 N·m (300 kgf·cm, 22 ft·lbf)

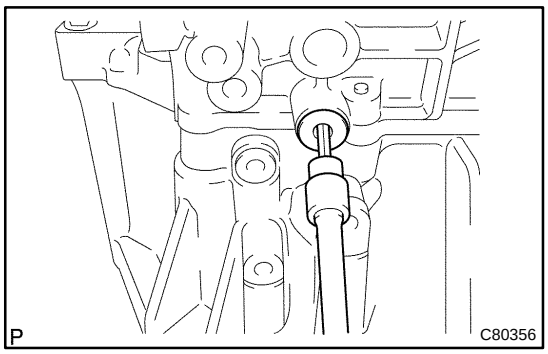

81. INSTALL LOCK BALL ASSY NO.1

(a) Coat the lock ball assy No.1 with sealant, install it with using a hexagon wrench.
Sealant:
Part No. 08833–00080, THREE BOND 1344, LOCTITE 242 or equivalent
Torque: 39.2 N·m (400 kgf·cm, 29 ft·lbf)

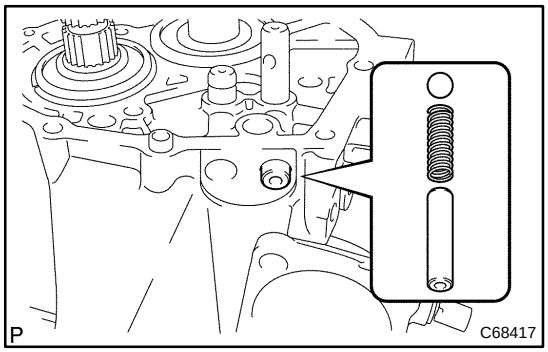

82. INSTALL SHIFT DETENT BALL

(a) Install the 2 shift detent balls, 2 springs with 2 seats to the manual transmission case.

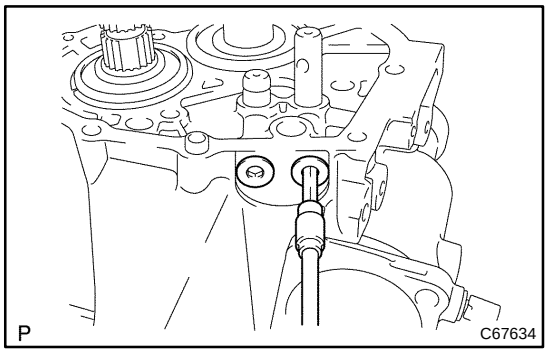

(b) Coat the 2 shift detent ball plugs with sealant, install them with using a hexagon wrench.
Sealant:
Part No. 08833–00080, THREE BOND 1344, LOCTITE 242 or equivalent
Torque: 24.5 N·m (250 kgf·cm, 18 ft·lbf)

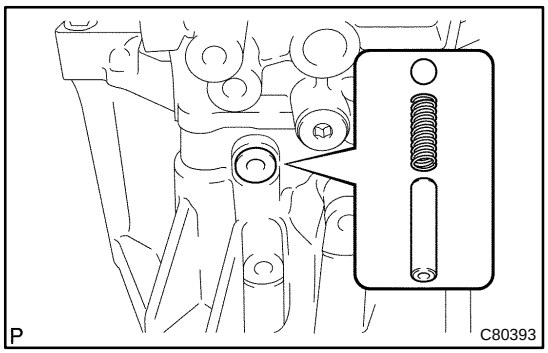

(c) Install the shift detent ball, spring and seat to the transaxle case.

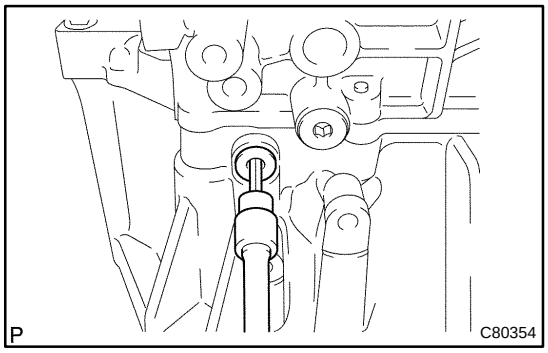

(d) Coat the shift detent ball plug with sealant, install it with using a hexagon wrench.
Sealant:
Part No. 08833–00080, THREE BOND 1344, LOCTITE 242 or equivalent
Torque: 24.5 N·m (250 kgf·cm, 18 ft·lbf)

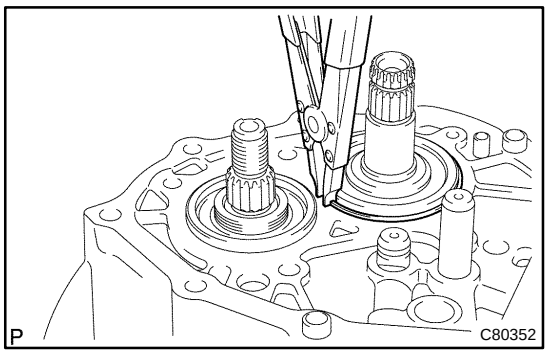

83. INSTALL INPUT SHAFT REAR BEARING HOLE SNAP RING

(a) Using a snap ring expander, install the input shaft rear bearing hole snap ring to the input shaft.

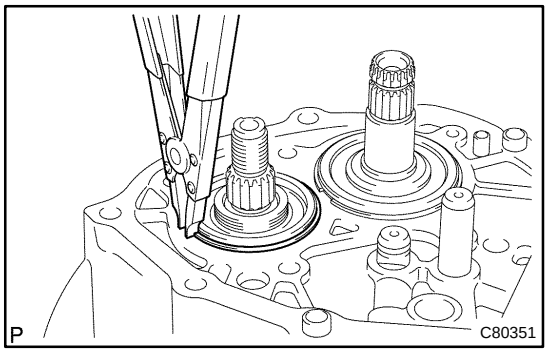

84. INSTALL OUTPUT SHAFT REAR BEARING HOLE SNAP RING

(a) Using a snap ring expander, install the output shaft rear bearing hole snap ring to the output shaft.

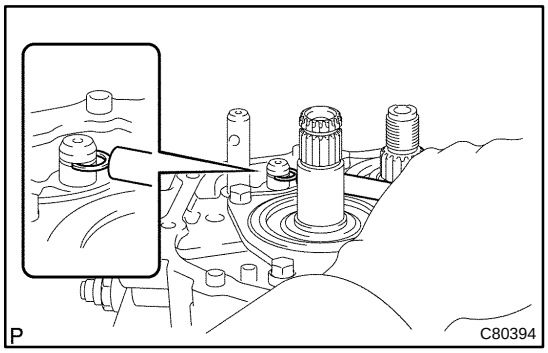

85. INSTALL SHIFT FORK SHAFT SHAFT SNAP RING

(a) Using a brass bar and a hammer, install the shift fork shaft shaft snap ring to the shift fork shaft No.2.

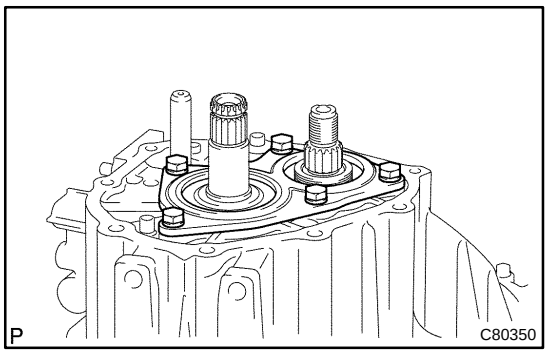

86. INSTALL BEARING RETAINER REAR (MTM)

(a) Coat the 5 bolts with sealant, install them and bearing retainer rear (MTM) to the manual transmission case.
Torque: 27.4 N·m (279 kgf·cm, 20 ft·lbf)

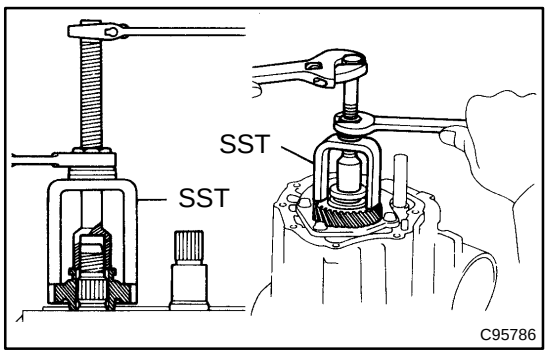

87. INSTALL 5TH DRIVEN GEAR

(a) Using SST, install the 5th driven gear to the output shaft.
SST 09309–12020

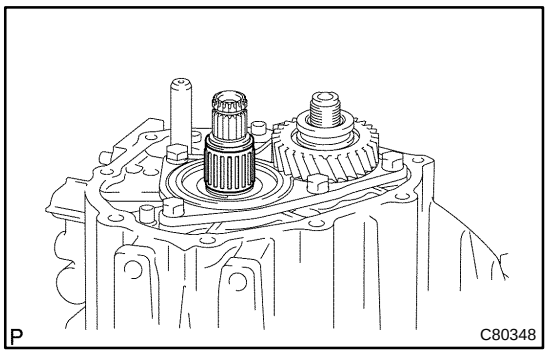

88. INSTALL 5TH GEAR NEEDLE ROLLER BEARING

(a) Coat the 5th gear needle roller bearing and 5th gear bearing spacer with gear oil, install them to the input shaft.

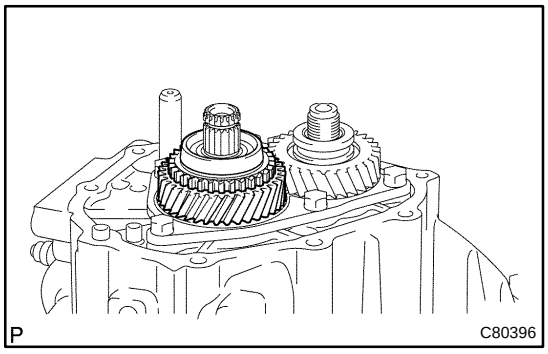

89. INSTALL 5TH GEAR

(a) Coat the 5th gear with gear oil, install it to the input shaft.

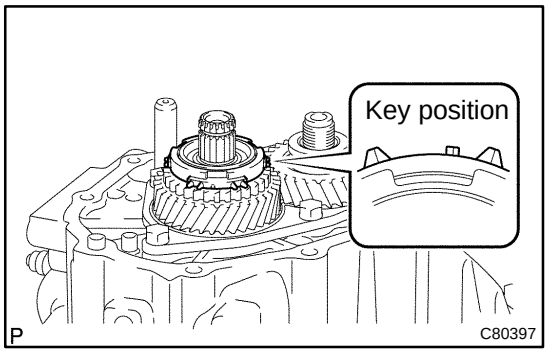

90. INSTALL SYNCHRONIZER RING NO.3

(a) Coat the synchronizer ring No.3 with gear oil, install it to the 5th gear.

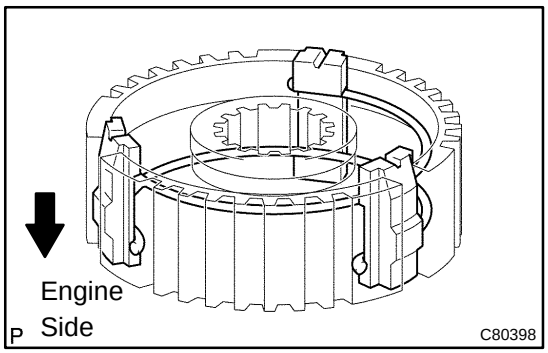

91. INSTALL TRANSMISSION CLUTCH HUB NO.3

(a) Install the 3 synchromesh shifting keys and 2 synchromesh shifting key springs to the transmission clutch hub No.3.

HINT:

Do not set both openings of the shifting key springs in the same position.

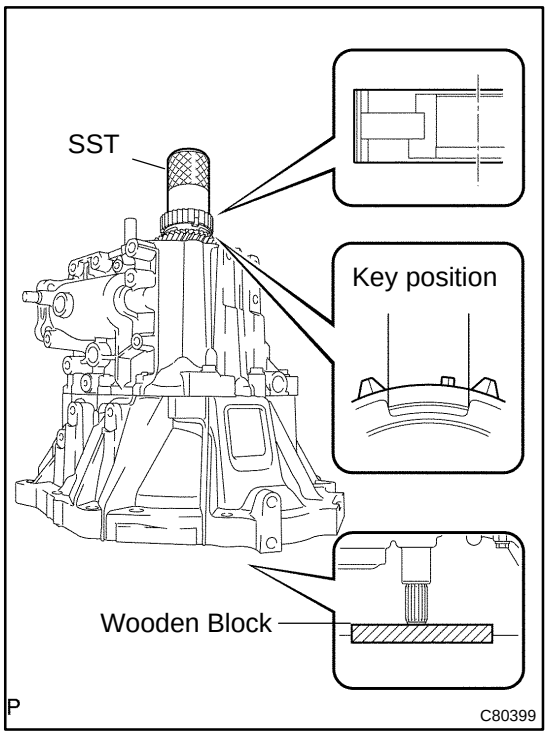

(b) Using SST and a hammer, install the transmission clutch hub No.3 to the input shaft.
SST 09636–20010

HINT:

- Before driving in the No.3 clutch hub assy, place the suitable sized wooden block on the rear side of the input shaft, as shown in the illustration.
- When driving it in, fix the input shaft firmly so that it is not pushed downward. Otherwise the input shaft rear bearing is over loaded, it might be damaged.

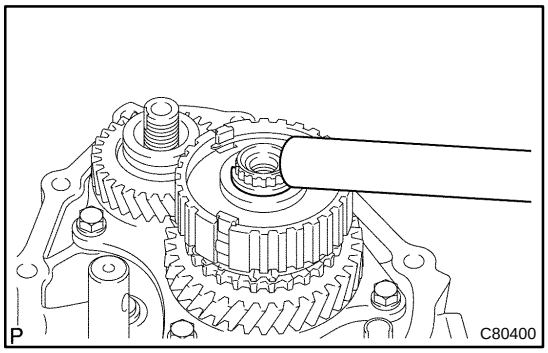

(c) Select a snap ring from the table below that will make the thrust clearance of the transmission clutch hub No.3 below 0.1 mm (0.004 in.).

Snap ring thickness:

Mark	Thickness: mm (in.)	Mark	Thickness: mm (in.)
A	2.25 (0.0886)	E	2.49 (0.0980)
B	2.31 (0.0909)	F	2.55 (0.1004)
C	2.37 (0.0933)	G	2.61 (0.1028)
D	2.43 (0.0957)	–	–

(d) Using a brass bar and a hammer, install the snap ring to the input shaft.

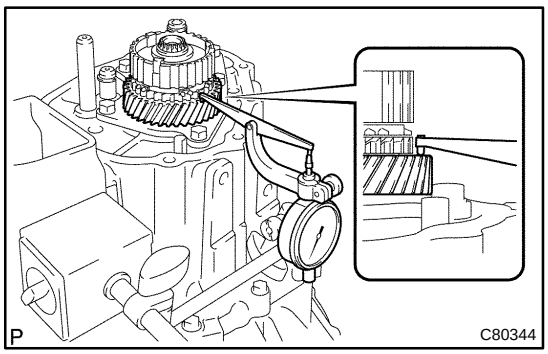

92. INSPECT 5TH GEAR THRUST CLEARANCE

(a) Using a dial indicator, measure the 5th gear thrust clearance.

5th gear thrust clearance:

Standard clearance: mm (in.)	Maximum clearance: mm (in.)
0.10 – 0.57 (0.0039 – 0.0224)	0.57 (0.0224)

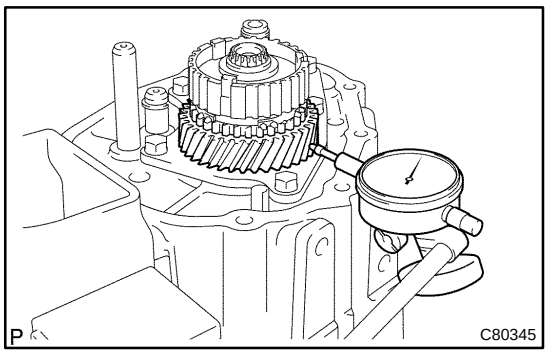

93. INSPECT 5TH GEAR RADIAL CLEARANCE

(a) Using a dial indicator, measure the 5th gear radial clearance.

5th gear radial clearance:

Standard clearance: mm (in.)	Maximum clearance: mm (in.)
KOYO made: 0.015 – 0.058 (0.0006 – 0.0023)	KOYO made: 0.058 (0.0023)
NSK made: 0.015 – 0.056 (0.0006 – 0.0022)	NSK made: 0.056 (0.0022)

If the clearance exceed the maximum value, replace the gear, needle roller bearing or shaft.

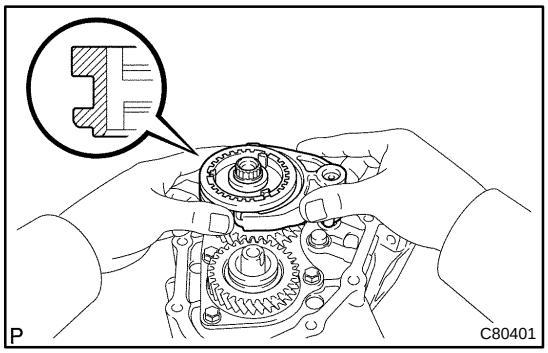

94. INSTALL GEAR SHIFT FORK NO.3

(a) Coat the transmission clutch hub sleeve No.3 with gear oil, install it and gear shift fork No.3 to the transmission clutch hub No.3.

HINT:

Do not set the transmission clutch hub No.3 in incorrect orientation.

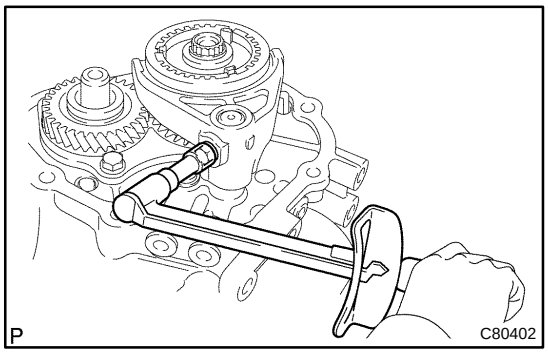

(b) Coat the gear shift lock fork ball with sealant, install it to the gear shift fork No.3.

Sealant:

Part No. 08833–00080, THREE BOND 1344, LOCTITE 242 or equivalent

Torque: 15.7 N·m (160 kgf·cm, 12 ft·lbf)

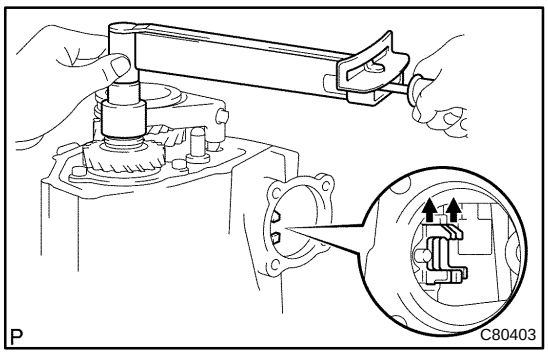

95. INSTALL MANUAL TRANSMISSION OUTPUT SHAFT REAR SET NUT

(a) Engage the gear double meshing.

(b) Install a new manual transmission output shaft rear set nut.

Torque: 117.6 N·m (1,200 kgf·cm, 87 ft·lbf)

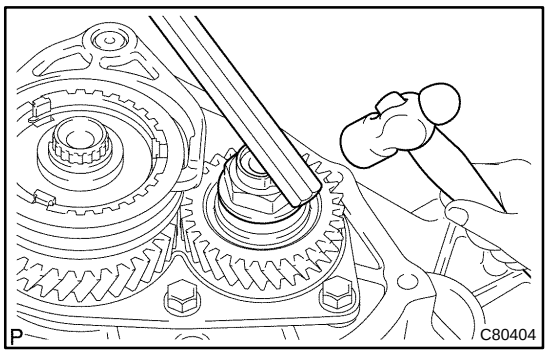

(c) Using a chisel and a hammer, stake the manual transmission output shaft rear set nut.

(d) Disengage the gear double meshing.

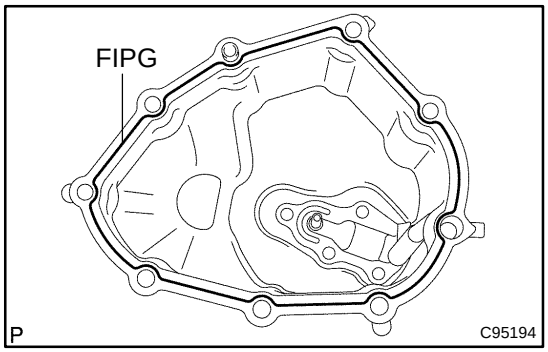

96. INSTALL MANUAL TRANSMISSION CASE COVER SUB–ASSY

(a) Apply FIPG to the manual transmission case cover sub–assy as shown in the illustration.

FIPG:

Part No. 08826–00090, THREE BOND 1281 or equivalent

NOTICE:

Parts must be assembled within 10 minutes of application. Otherwise, the packing (FIPG) material must be removed and reapplied.

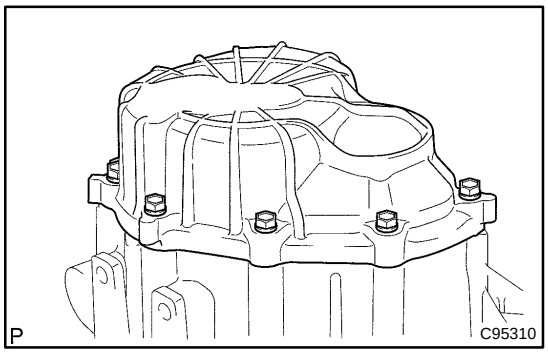

(b) Install the manual transmission case cover sub–assy with the 9 bolts to the manual transmission case.

Torque: 18.1 N·m (185 kgf·cm, 13 ft·lbf)

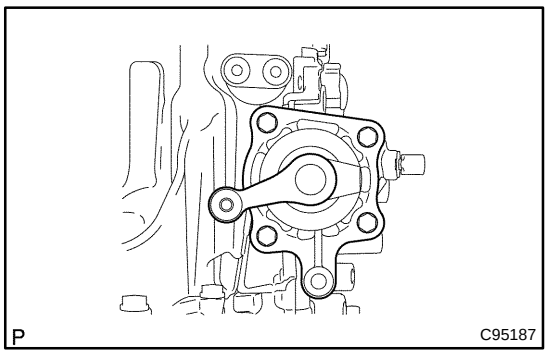

97. INSTALL SHIFT & SELECT LEVER SHAFT ASSY

(a) Coat the 4 bolts with sealant, install them, new gasket and shift & select lever shaft assy to the manual transmission case.

Sealant:

Part No. 08833–00080, THREE BOND 1344, LOCTITE 242 or equivalent

Torque: 19.6 N·m (200 kgf·cm, 14 ft·lbf)

NOTICE:

Set the claws of the shift interlock plate into the shift head part of the gear shift fork shaft securely.

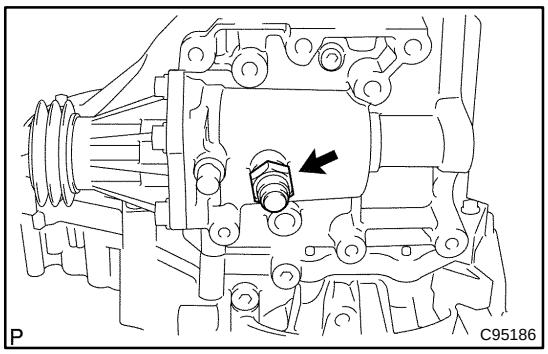

98. INSTALL LOCK BALL ASSY NO.1

(a) Coat the lock ball assy No.1 with sealant, install it to the manual transmission case.
Sealant:
Part No. 08833–00080, THREE BOND 1344, LOCTITE 242 or equivalent
Torque: 29.4 N·m (300 kgf·cm, 22 ft·lbf)

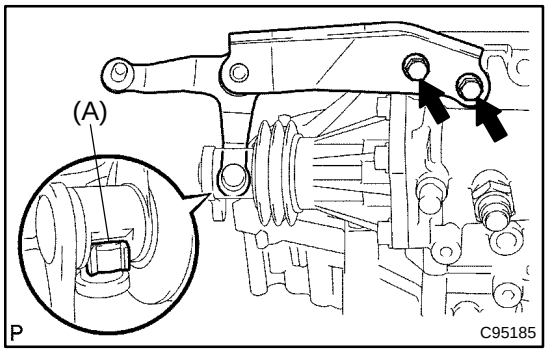

99. INSTALL SELECTING BELL CRANK ASSY

(a) Install the selecting bellcrank assy with control shift lever bush with the 2 bolts to the manual transmission case.
Torque: 24.5 N·m (250 kgf·cm, 18 ft·lbf)

NOTICE:
Apply MP grease to the inside circumferential surface of the control shift lever bush (A).

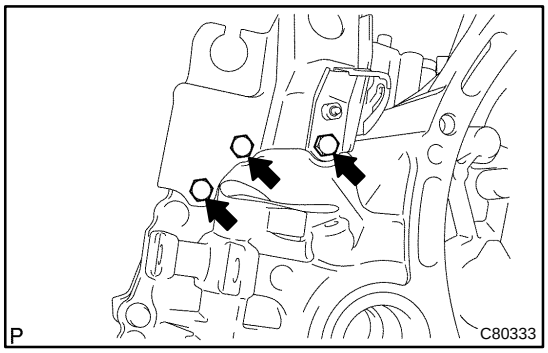

100. INSTALL FLOOR SHIFT CONTROL LEVER HOUSING SUPPORT BRACKET

(a) Install the floor shift control lever housing support bracket with the 3 bolts to the transaxle case.
Torque: 11.3 N·m (115 kgf·cm, 8 ft·lbf)

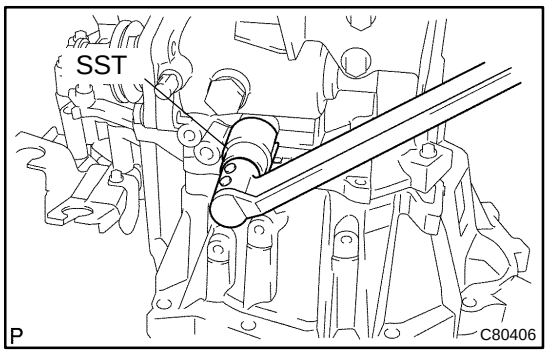

101. INSTALL BACK UP LAMP SWITCH ASSY

(a) Using SST, install the back up lamp switch assy with a new gasket to the manual transmission case.
Torque: 40.2 N·m (411 kgf·cm, 30 ft·lbf)
SST 09817–16011

102. INSTALL SPEEDOMETER DRIVEN HOLE COVER SUB–ASSY (W/ ABS)

(a) Install a new O–ring to the speedometer driver hole cover sub–assy.
(b) Install the speedometer driver hole cover sub–assy with the bolt.
Torque: 11.3 N·m (115 kgf·cm, 8 ft·lbf)

103. INSTALL SPEEDOMETER DRIVEN (MTM) GEAR SUB–ASSY (W/O ABS)

(a) Install the speedometer driven (MTM) gear sub–assy with clip to the speedometer sensor.

104. INSTALL SPEEDOMETER SENSOR (W/O ABS)

(a) Install a new O–ring to the speedometer sensor.

(b) Install the speedometer sensor with the bolt.
Torque: 11.3 N·m (115 kgf·cm, 8 ft·lbf)

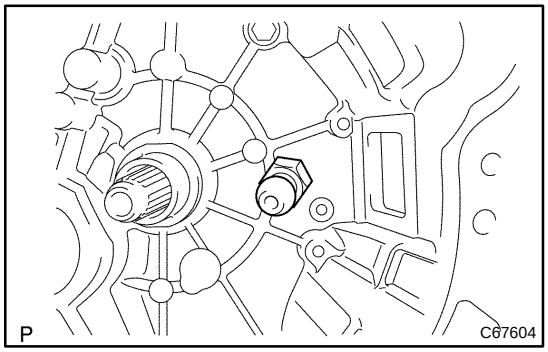

105. INSTALL RELEASE FORK SUPPORT

(a) Install the release fork support to the transaxle case.
Torque: 36.8 N·m (375 kgf·cm, 27 ft·lbf)

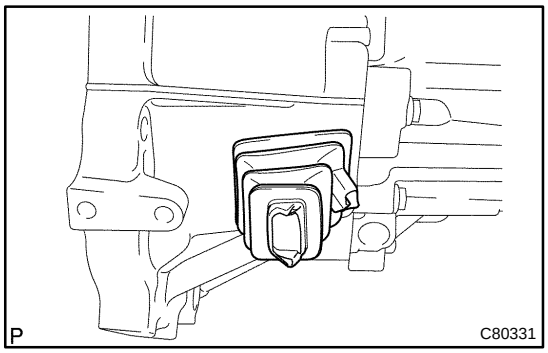

106. INSTALL CLUTCH RELEASE FORK BOOT

(a) Install the clutch release fork boot to the transaxle case.

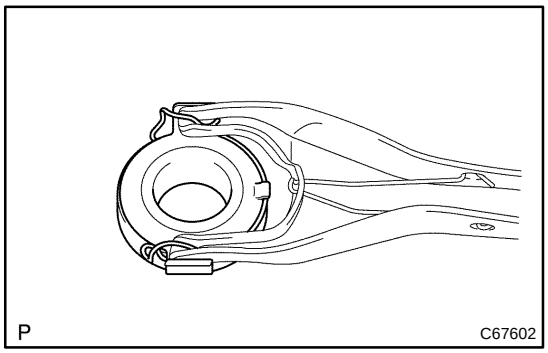

107. INSTALL CLUTCH RELEASE BEARING ASSY

(a) Coat the clutch release bearing assy with the release hub grease, install it to the clutch release fork sub–assy.
Sealant:
Part No. 08887–01806, RELEASE HUB GREASE or equivalent

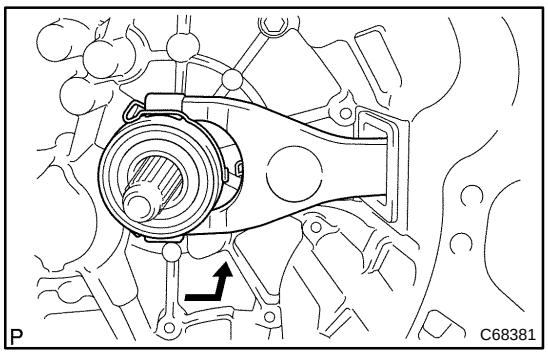

108. INSTALL CLUTCH RELEASE FORK SUB–ASSY

(a) Install the clutch release fork sub–assy to the input shaft.

(b) Apply clutch spline grease to spline of the input shaft .
Sealant:
Part No. 08887–01806, CLUTCH SPLINE GREASE or equivalent

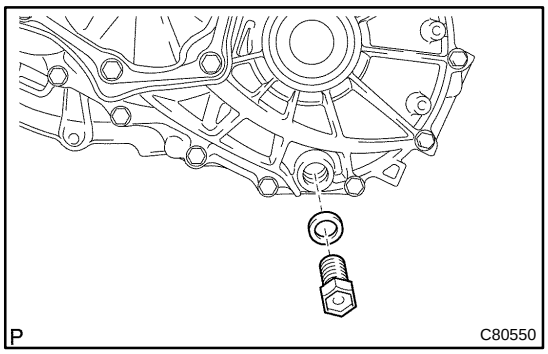

109. INSTALL MANUAL TRANSMISSION FILLER PLUG

(a) Install a new gasket with the drain (MTM) plug sub–assy.
Torque: 39.2 N·m (400 kgf·cm, 29 ft·lbf)

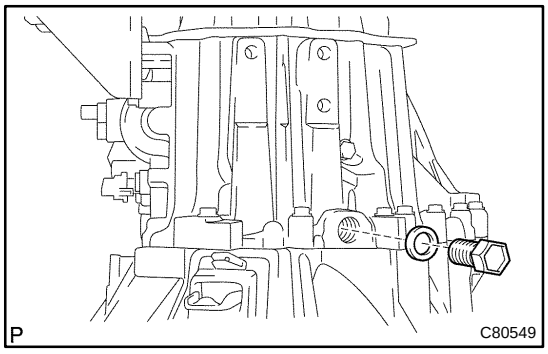

110. INSTALL DRAIN (MTM) PLUG SUB–ASSY

(a) Install a new gasket with the manual transmission filler plug.
Torque: 39.2 N·m (400 kgf·cm, 29 ft·lbf)

INPUT SHAFT ASSY (C59)

COMPONENTS

41082–01

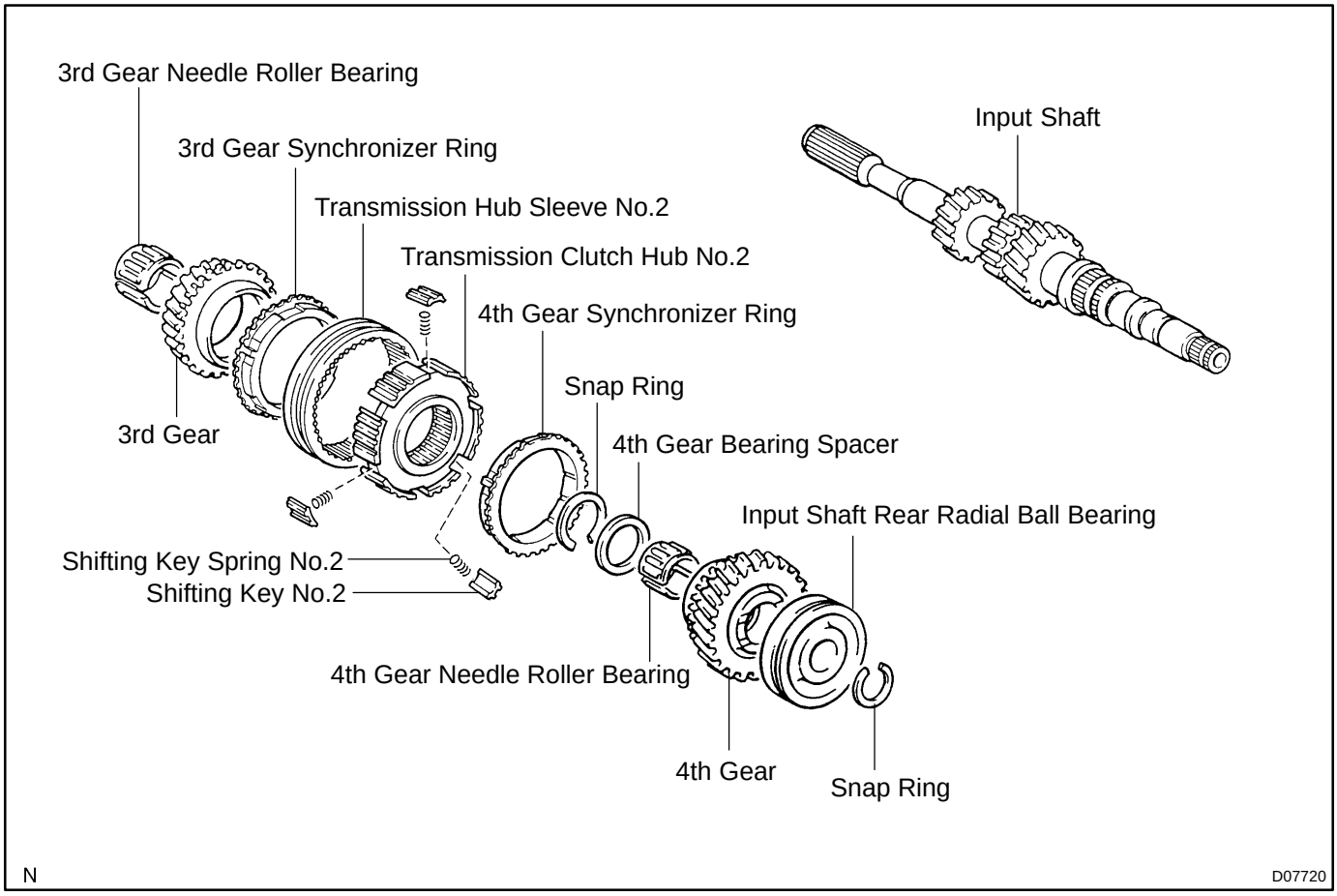

41083–01

OVERHAUL

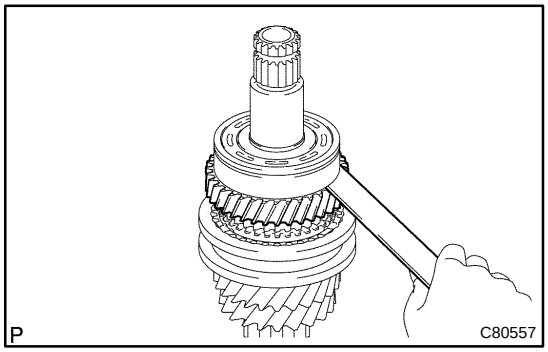

1. INSPECT 4TH GEAR THRUST CLEARANCE

(a) Using a feeler gauge, measure the 4th gear thrust clearance.

4th gear thrust clearance:

Standard clearance: mm (in.)	Maximum clearance: mm (in.)
0.10 – 0.55 (0.0039 – 0.0217)	0.55 (0.0217)

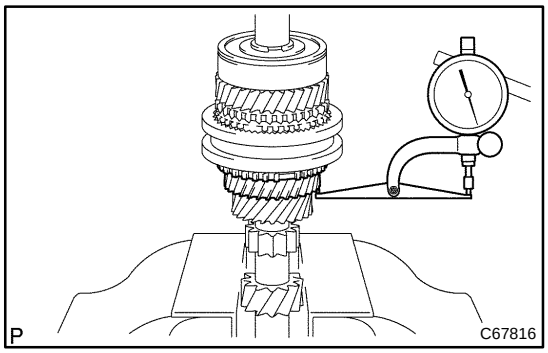

2. INSPECT 3RD GEAR THRUST CLEARANCE

(a) Using a dial indicator, measure the 3rd gear thrust clearance.

3rd gear thrust clearance:

Standard clearance: mm (in.)	Maximum clearance: mm (in.)
0.10 – 0.35 (0.0039 – 0.0138)	0.35 (0.0138)

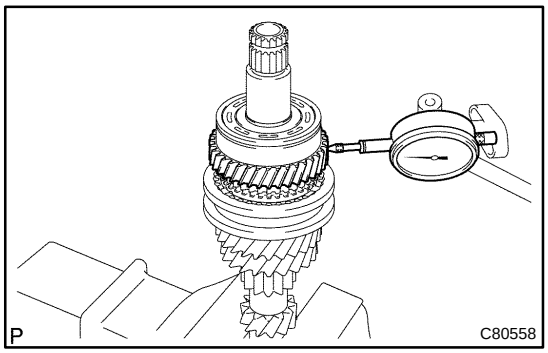

3. INSPECT 4TH GEAR RADIAL CLEARANCE

(a) Using a dial indicator, measure the 4th gear radial clearance.

4th gear radial clearance:

	Standard clearance: mm (in.)	Maximum clearance: mm (in.)
KOYO made	0.015 – 0.058 (0.0006 – 0.0023)	0.058 (0.0023)
NSK made	0.015 – 0.056 (0.0006 – 0.0022)	0.056 (0.0022)

If the clearance exceeds the maximum, replace the gear, needle roller bearing or shaft.

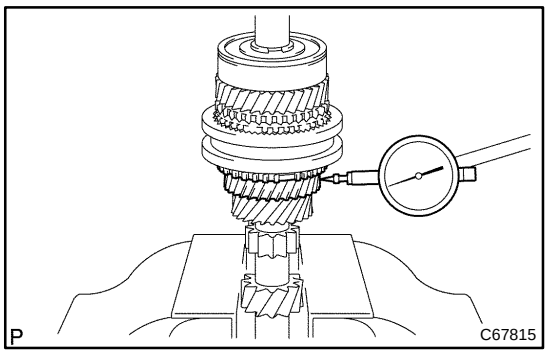

4. INSPECT 3RD GEAR RADIAL CLEARANCE

(a) Using a dial indicator, measure the 3rd gear radial clearance.

3rd gear radial clearance:

	Standard clearance: mm (in.)	Maximum clearance: mm (in.)
KOYO made	0.015 – 0.058 (0.0006 – 0.0023)	0.058 (0.0023)
NSK made	0.015 – 0.056 (0.0006 – 0.0022)	0.0056 (0.0022)

If the clearance exceeds the maximum, replace the gear, needle roller bearing or shaft.

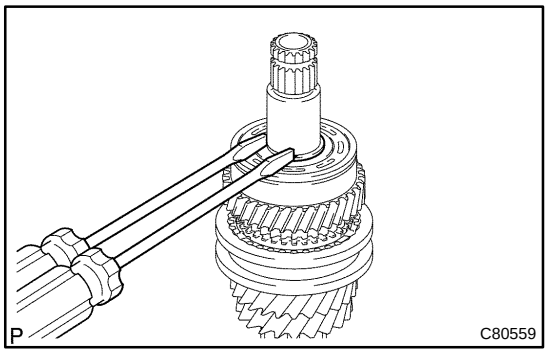

5. REMOVE 4TH GEAR

(a) Using 2 screwdrivers and a hammer, tap out the snap ring.

HINT:

Using a waste to prevent the snap ring from being scattered.

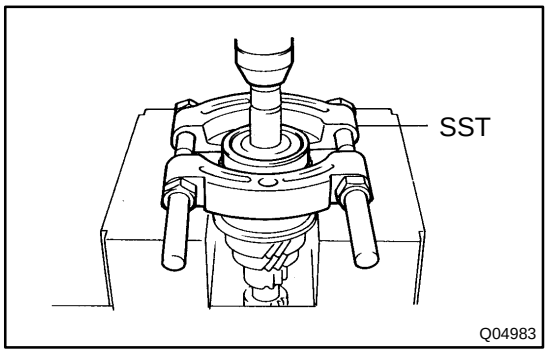

(b) Using SST and a press, remove the input shaft radial ball bearing rear and 4th gear from the input shaft.

SST 09950–00020

NOTICE:

- **Do not tighten SST excessively.**
- **Support the input shaft assy by hand so that it will not be dropped off.**

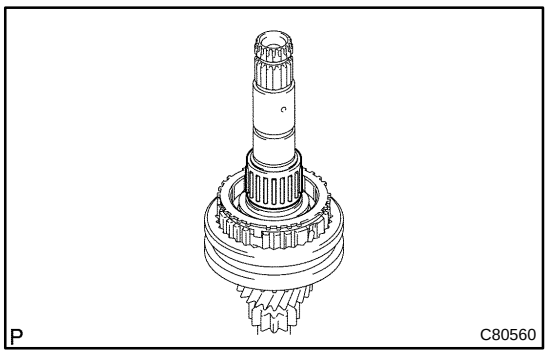

6. REMOVE 4TH GEAR NEEDLE ROLLER BEARING

(a) Remove the 4th gear needle roller bearing and 4th gear bearing spacer from the input shaft.

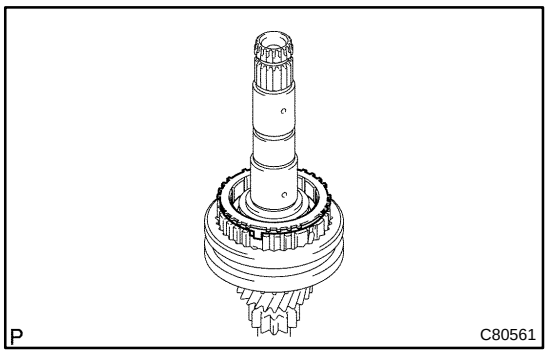

7. REMOVE 4TH GEAR SYNCHRONIZER RING

(a) Remove the 4th gear synchronizer ring from the transmission clutch hub No.2.

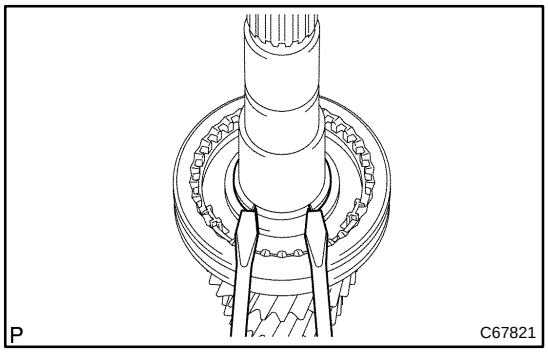

8. REMOVE 3RD GEAR

(a) Using 2 screwdrivers and a hammer, tap out the snap ring.

HINT:

Using a waste to prevent the snap ring from being scattered.

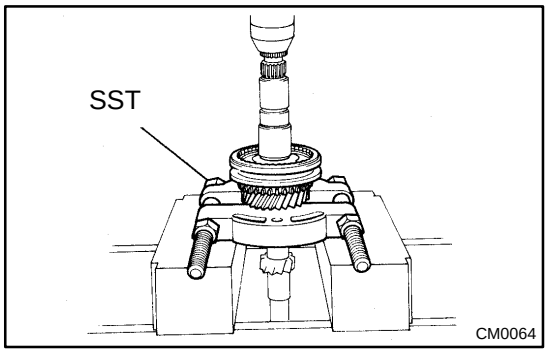

(b) Using SST and a press, remove the transmission clutch hub No.2 and 3rd gear from the input shaft.

SST 09950–00020

NOTICE:

- **Do not tighten SST excessively.**
- **Support the input shaft by hand so that it will not be dropped off.**

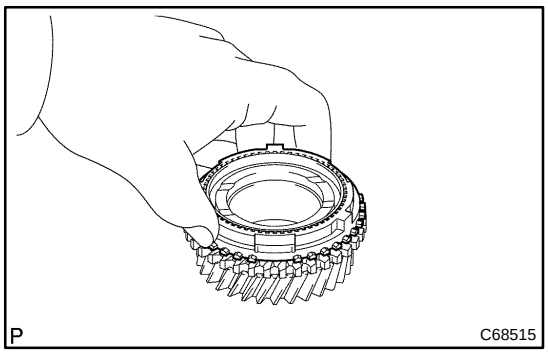

9. REMOVE 3RD GEAR SYNCHRONIZER RING

(a) Remove the 3rd gear synchronizer ring from the 3rd gear.

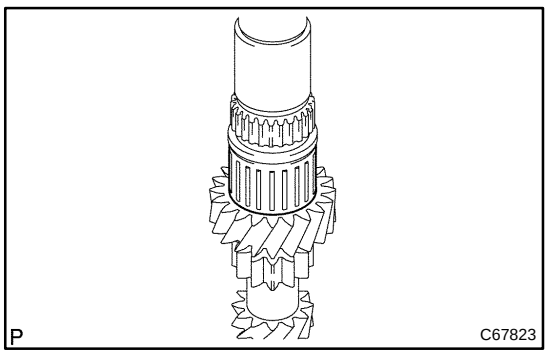

10. REMOVE 3RD GEAR NEEDLE ROLLER BEARING

(a) Remove the 3rd gear needle roller bearing from the input shaft.

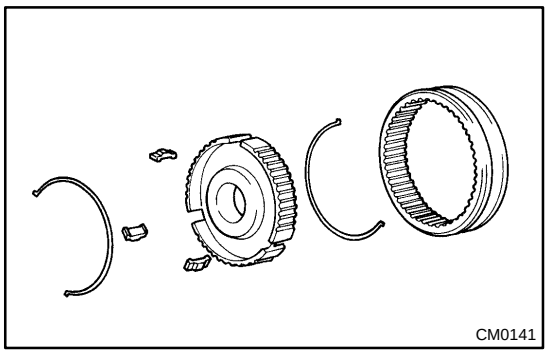

11. REMOVE TRANSMISSION HUB SLEEVE NO.2

(a) Remove the transmission hub sleeve No.2, 3 synchromesh shifting keys and 2 synchromesh shifting key springs from the transmission clutch hub No.2.

HINT:

Using a waste to prevent the shifting key and shifting key spring from being scattered.

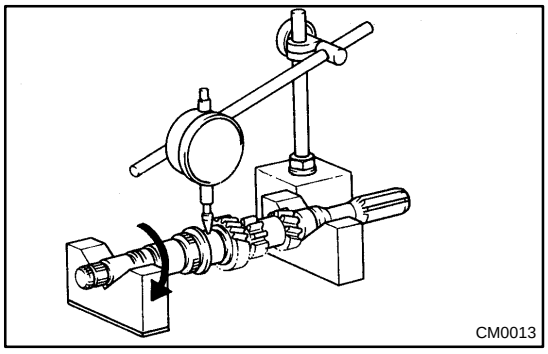

12. INSPECT INPUT SHAFT

(a) Using a dial indicator, check the shaft runout.

Maximum runout: 0.015 mm (0.006 in.)

If the runout exceeds the maximum, replace the input shaft.

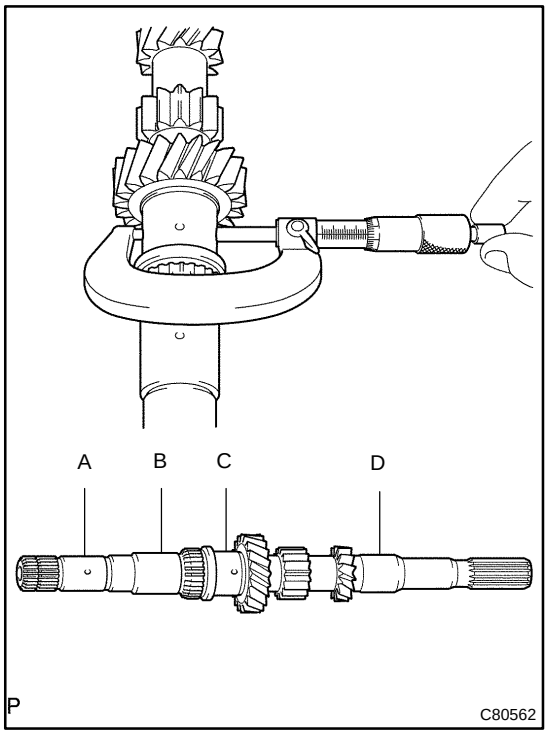

(b) Using a micrometer, measure the outer diameter of the input shaft journal surface.

Input shaft outer diameter:

Part	Standard outer diameter: mm (in.)	Minimum outer diameter: mm (in.)
A	24.885 – 24.900 (0.9797 – 0.9803)	24.885 (0.9797)
B	28.985 – 29.000 (1.1411 – 1.1417)	28.985 (1.1411)
C	30.985 – 31.000 (1.2198 – 1.2204)	30.985 (1.2198)
D	24.985–25.000 (0.9836 – 0.9842)	24.985 (0.9836)

If the outer diameter is below the minimum, replace the input shaft.

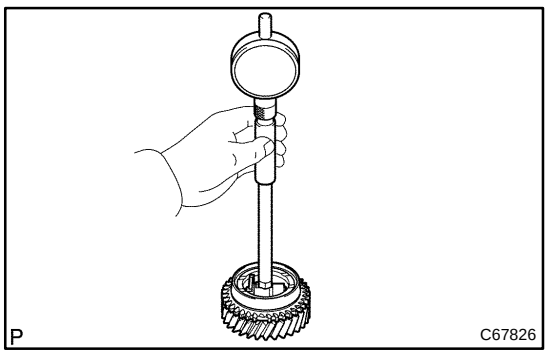

13. INSPECT 4TH GEAR

(a) Using a cylinder gauge, measure the inside diameter of the 4th gear.

Standard inside diameter:
34.015 – 34.031 mm (1.3391 – 1.3398 in.)
Maximum inside diameter:
34.031 mm (1.3398 in.)

If the inside diameter exceeds the maximum, replace the 4th gear.

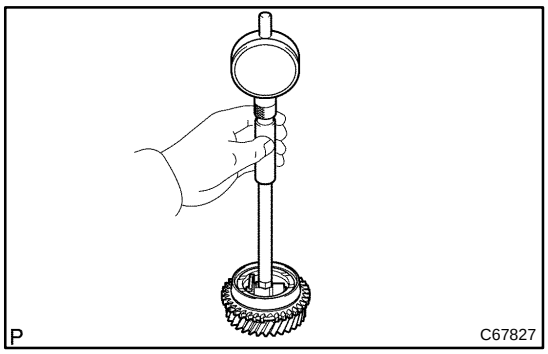

14. INSPECT 3RD GEAR

(a) Using a cylinder gauge, measure the inside diameter of the 3rd gear.

Standard inside diameter:
36.015 – 36.031 mm (1.4179 – 1.4185 in.)
Maximum inside diameter:
36.031 mm (1.4185 in.)

If the inside diameter exceeds the maximum, replace the 3rd gear.

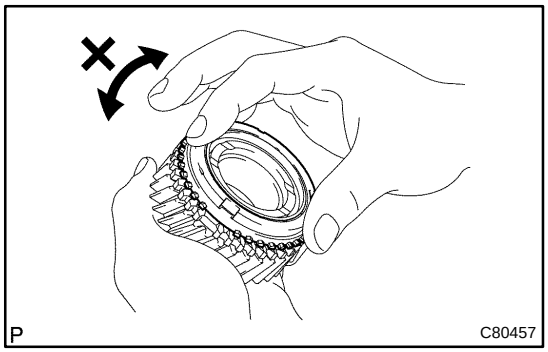

15. INSPECT 4TH GEAR SYNCHRONIZER RING

(a) Check for wear or damage.

(b) Check the braking effect of the 3rd gear synchronizer ring. Turn the 3rd gear synchronizer ring in one direction while pushing it to the gear cone. Check that the ring locks.

If the braking effect is insufficient, apply a small amount of the fine lapping compound between 3rd gear synchronizer ring and 3rd gear cone. Lightly rub the 3rd gear synchronizer ring and 3rd gear cone together.

NOTICE:

Ensure the fine lapping compound is completely washed off after rubbing.

(c) Check again the braking effect of the synchronizer ring.

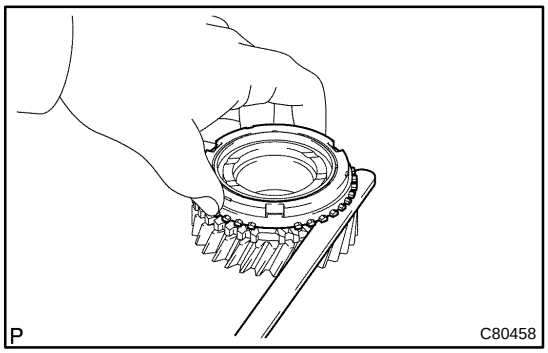

(d) Using a feeler gauge, measure the clearance between 3rd gear synchronizer ring back and 3rd gear spline end.

Minimum clearance:
0.65 mm (0.0256 in.)

If the clearance below than the minimum, replace the 3rd gear synchronizer ring, and apply small amount of the fine lapping compound on gear cone.

NOTICE:

Ensure the fine lapping compound is completely washed off after rubbing.

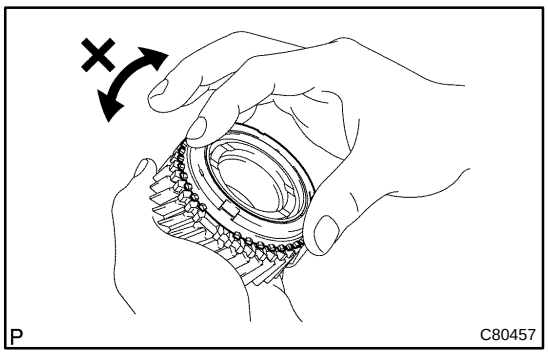

16. INSPECT 3RD GEAR SYNCHRONIZER RING

(a) Check for wear or damage.

(b) Check the braking effect of the 4th gear synchronizer ring. Turn the 4th gear synchronizer ring in one direction while pushing it to the gear cone. Check that the ring locks.

If the braking effect is insufficient, apply a small amount of the fine lapping compound between 4th gear synchronizer ring and 4th gear cone. Lightly rub the 4th gear synchronizer ring and 4th gear cone.

NOTICE:

Ensure the fine lapping compound is completely washed off after rubbing.

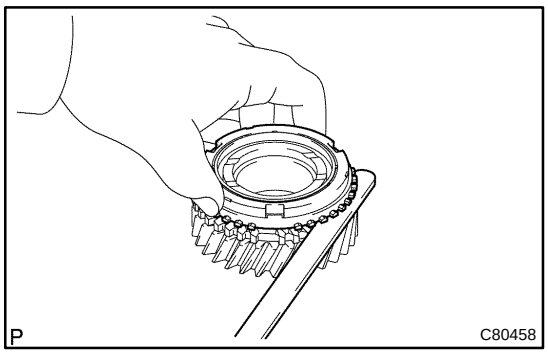

(c) Using a feeler gauge, measure the clearance between 4th gear synchronizer ring back and 4th gear spline end.
Minimum clearance: 0.75 mm (0.0295 in.)

If the clearance below than the minimum, replace the 4th gear synchronizer ring, and apply small amount of the fine lapping compound on gear cone.

NOTICE:

Ensure the fine lapping compound is completely washed off after rubbing.

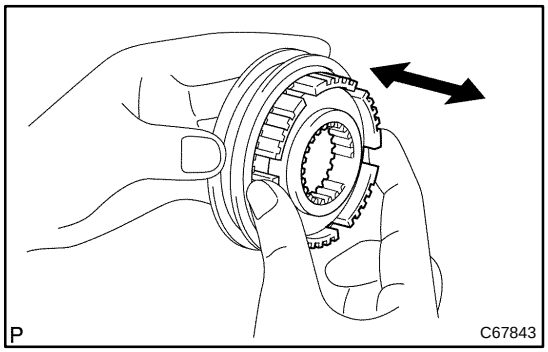

17. INSPECT TRANSMISSION HUB SLEEVE NO.2

(a) Check the sliding condition between the transmission hub sleeve No.2 and transmission clutch hub No.2.

(b) Check that the spline gear's edges of the transmission hub sleeve No.2 is not worn down.

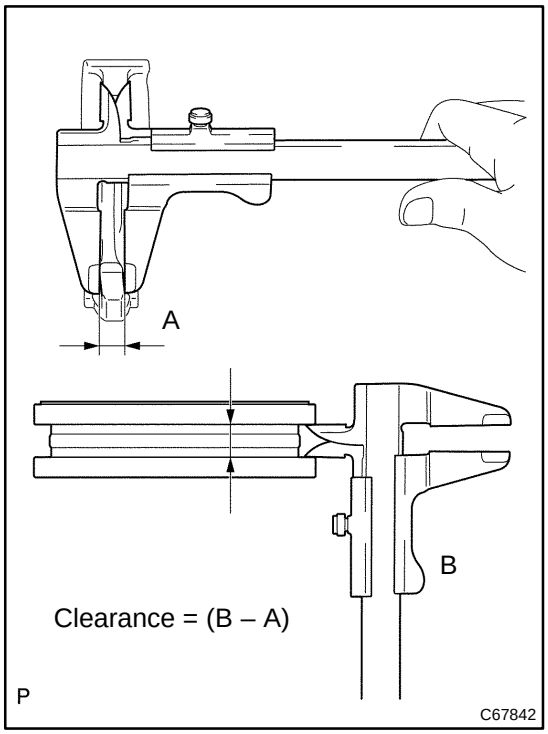

(c) Using a vernier caliper, inspect the transmission hub sleeve No.2 and gear shift fork No.2 as shown in the illustration.
Standard clearance:
0.15 – 0.35 mm (0.0059 – 0.0137 in.)

If the clearance is out of specification, replace the transmission hub sleeve No.2 and gear shift fork No.2.

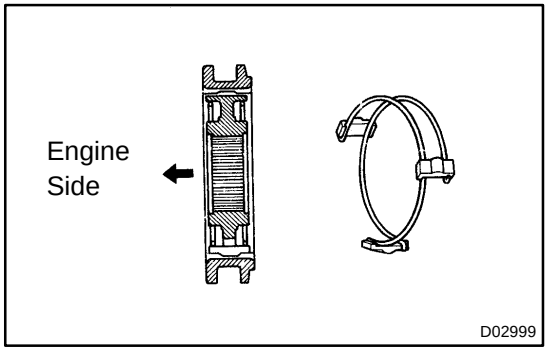

18. INSTALL TRANSMISSION HUB SLEEVE NO.2

(a) Coat the transmission hub sleeve No.2 with gear oil, install it to the transmission clutch hub No.2.

NOTICE:

Do not set the transmission clutch hub sleeve No.2 and the transmission clutch hub No.2 in incorrect orientation.

(b) Install the 2 synchromesh key springs with 3 synchromesh shifting keys to the transmission clutch hub No.2.

HINT:

Do not set the both openings of the shifting key springs in the same position.

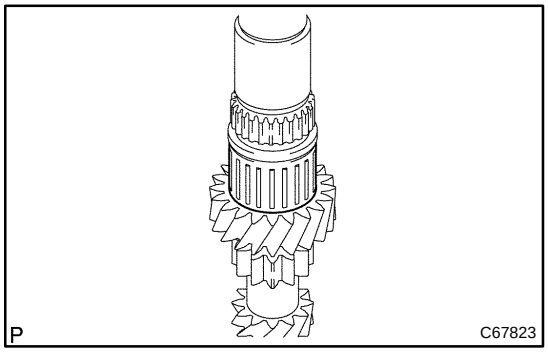

19. INSTALL 3RD GEAR NEEDLE ROLLER BEARING

(a) Coat the 3rd gear needle roller bearing with gear oil, install it to the input shaft.

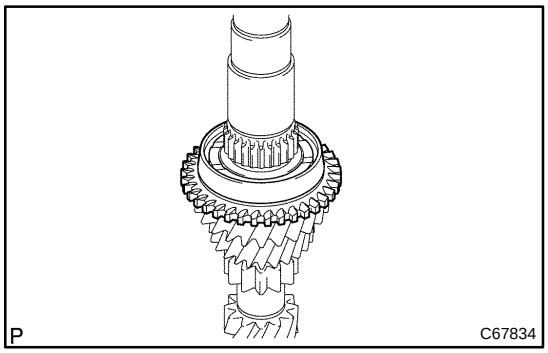

20. INSTALL 3RD GEAR

(a) Coat the 3rd gear with gear oil, install it to the input shaft.

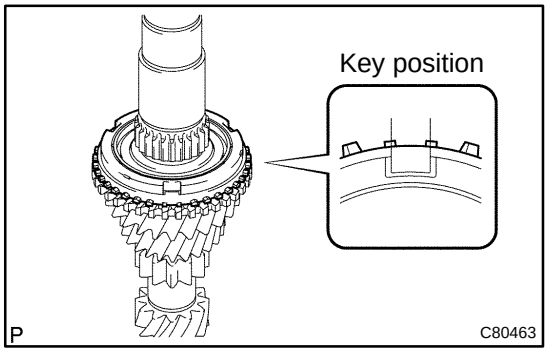

21. INSTALL 3RD GEAR SYNCHRONIZER RING

(a) Coat the 3rd gear synchronizer ring with gear oil, install it to the 3rd gear.

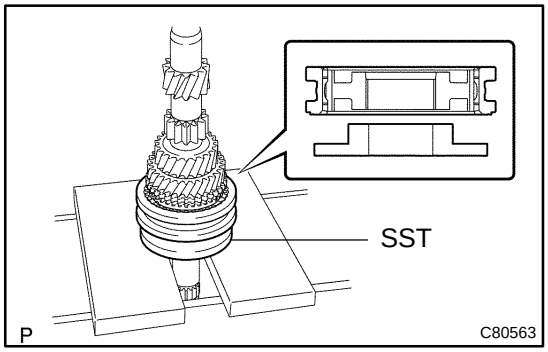

22. INSTALL TRANSMISSION CLUTCH HUB NO.2

(a) Using SST and a press, install the transmission clutch hub No.2 to the input shaft.

SST 09316–60011 (09316–00021)

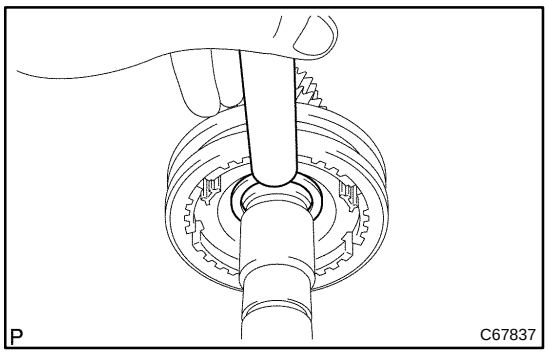

(b) Select a snap ring from the table below that will make the thrust clearance of the transmission clutch hub No.2 below 0.1 mm (0.004 in.).

Snap ring thickness:

Mark	Thickness: mm (in.)	Mark	Thickness: mm (in.)
0	2.30 (0.0906)	3	2.48 (0.0976)
1	2.36 (0.0929)	4	2.54 (0.1000)
2	2.42 (0.0953)	5	2.60 (0.1024)

(c) Using a brass bar and a hammer, tap in the snap ring.

NOTICE:

Take care not to damage the journal surface of the input shaft.

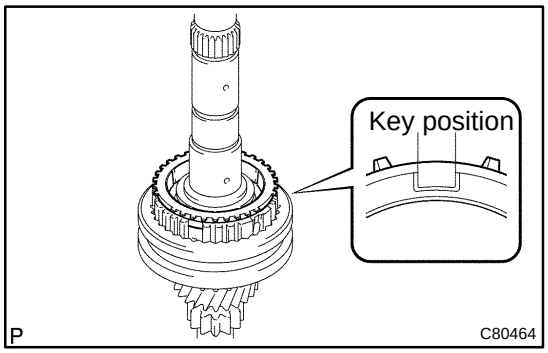

23. INSTALL 4TH GEAR SYNCHRONIZER RING

(a) Coat the 4th gear synchronizer ring with gear oil, install it to the transmission clutch hub No.2.

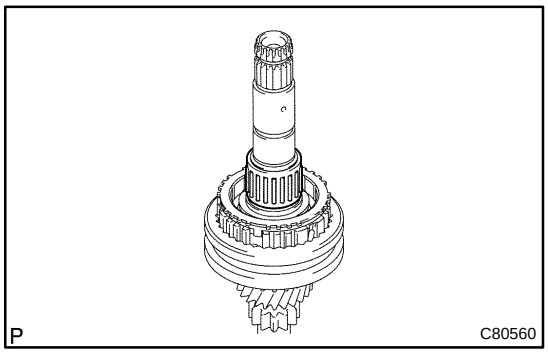

24. INSTALL 4TH GEAR NEEDLE ROLLER BEARING

(a) Coat the 4th gear needle roller bearing and 4th gear bearing spacer with gear oil, install them to the input shaft.

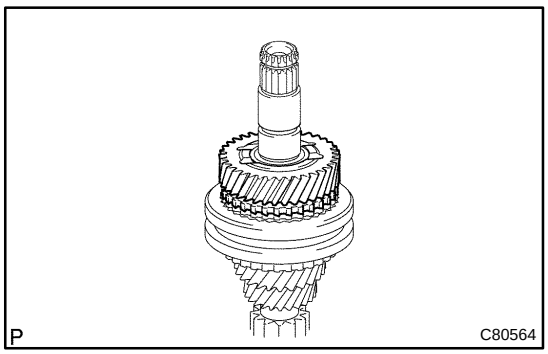

25. INSTALL 4TH GEAR

(a) Coat the 4th gear with gear oil, install it to the input shaft.

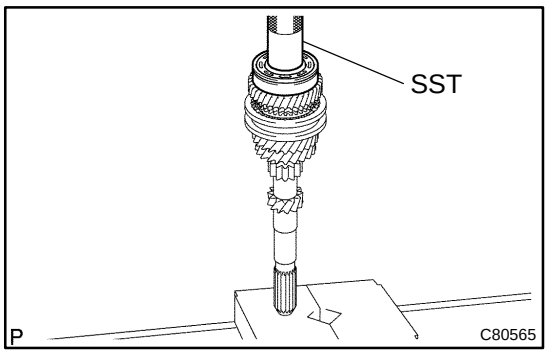

26. INSTALL INPUT SHAFT REAR RADIAL BALL BEARING

(a) Using SST and a press, install the input shaft rear radial ball bearing to the input shaft.
SST 09636–20010

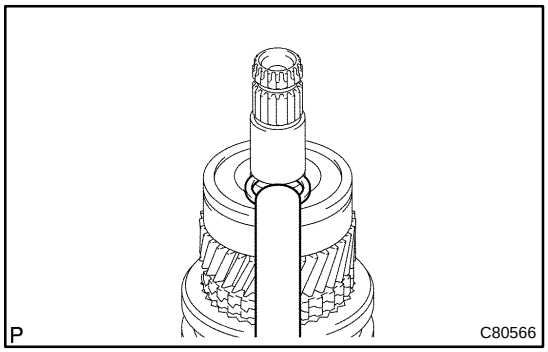

(b) Select a snap ring from the table below that will make the thrust clearance of the input shaft rear radial ball bearing below 0.1 mm (0.004 in.).

Snap ring thickness:

Mark	Thickness: mm (in.)	Mark	Thickness: mm (in.)
0	2.29 (0.0901)	3	2.47 (0.0972)
1	2.35 (0.0925)	4	2.53 (0.0996)
2	2.41 (0.0948)	5	2.59 (0.1019)

(c) Using a brass bar and a hammer, tap in the snap ring.

NOTICE:

Take care not to damage the journal surface of the snap ring.

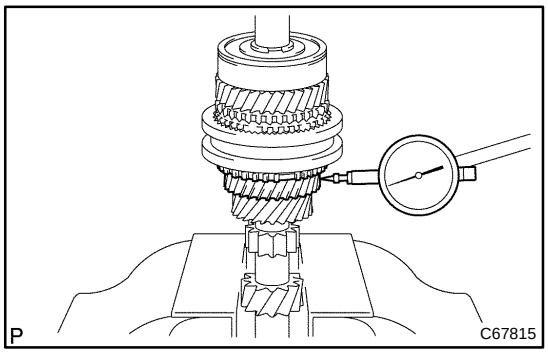

27. INSPECT 3RD GEAR RADIAL CLEARANCE

(a) Using a dial indicator, measure the 3rd gear radial clearance.

3rd gear radial clearance:

	Standard clearance: mm (in.)	Maximum clearance: mm (in.)
KOYO made	0.015 – 0.058 (0.0006 – 0.0023)	0.058 (0.0023)
NSK made	0.015 – 0.056 (0.0006 – 0.0022)	0.0056 (0.0022)

If the clearance exceeds the maximum, replace the gear, needle roller bearing or shaft.

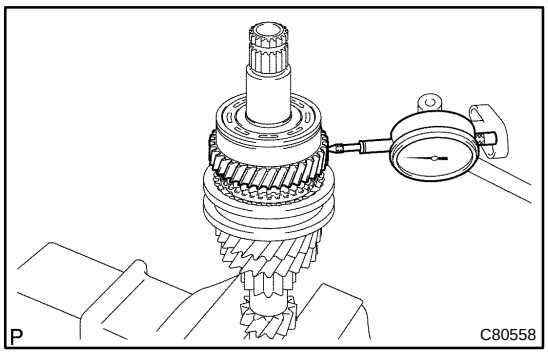

28. INSPECT 4TH GEAR RADIAL CLEARANCE

(a) Using a dial indicator, measure the 4th gear radial clearance.

4th gear radial clearance:

	Standard clearance: mm (in.)	Maximum clearance: mm (in.)
KOYO made	0.015 – 0.058 (0.0006 – 0.0023)	0.058 (0.0023)
NSK made	0.015 – 0.056 (0.0006 – 0.0022)	0.056 (0.0022)

If the clearance exceeds the maximum, replace the gear, needle roller bearing or shaft.

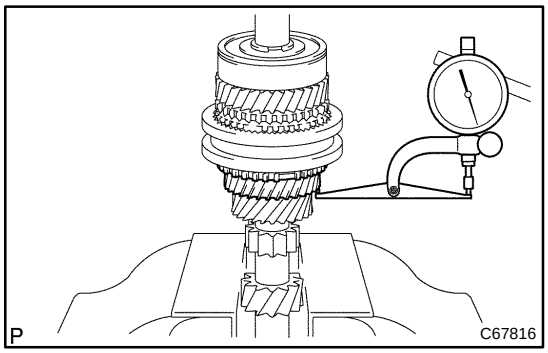

29. INSPECT 3RD GEAR THRUST CLEARANCE

(a) Using a dial indicator, measure the 3rd gear thrust clearance.

3rd gear thrust clearance:

Standard clearance: mm (in.)	Maximum clearance: mm (in.)
0.10 – 0.35 (0.0039 – 0.0138)	0.10 (0.0138)

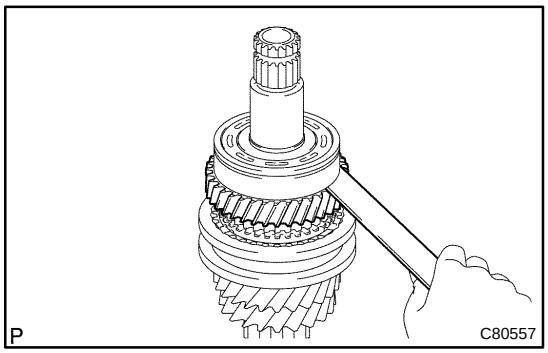

30. INSPECT 4TH GEAR THRUST CLEARANCE

(a) Using a feeler gauge, measure the 4th gear thrust clearance.

4th gear thrust clearance:

Standard clearance: mm (in.)	Maximum clearance: mm (in.)
0.10 – 0.55 (0.0039 – 0.0217)	0.55 (0.0217)

OUTPUT SHAFT ASSY (C59)

41086–01

COMPONENTS

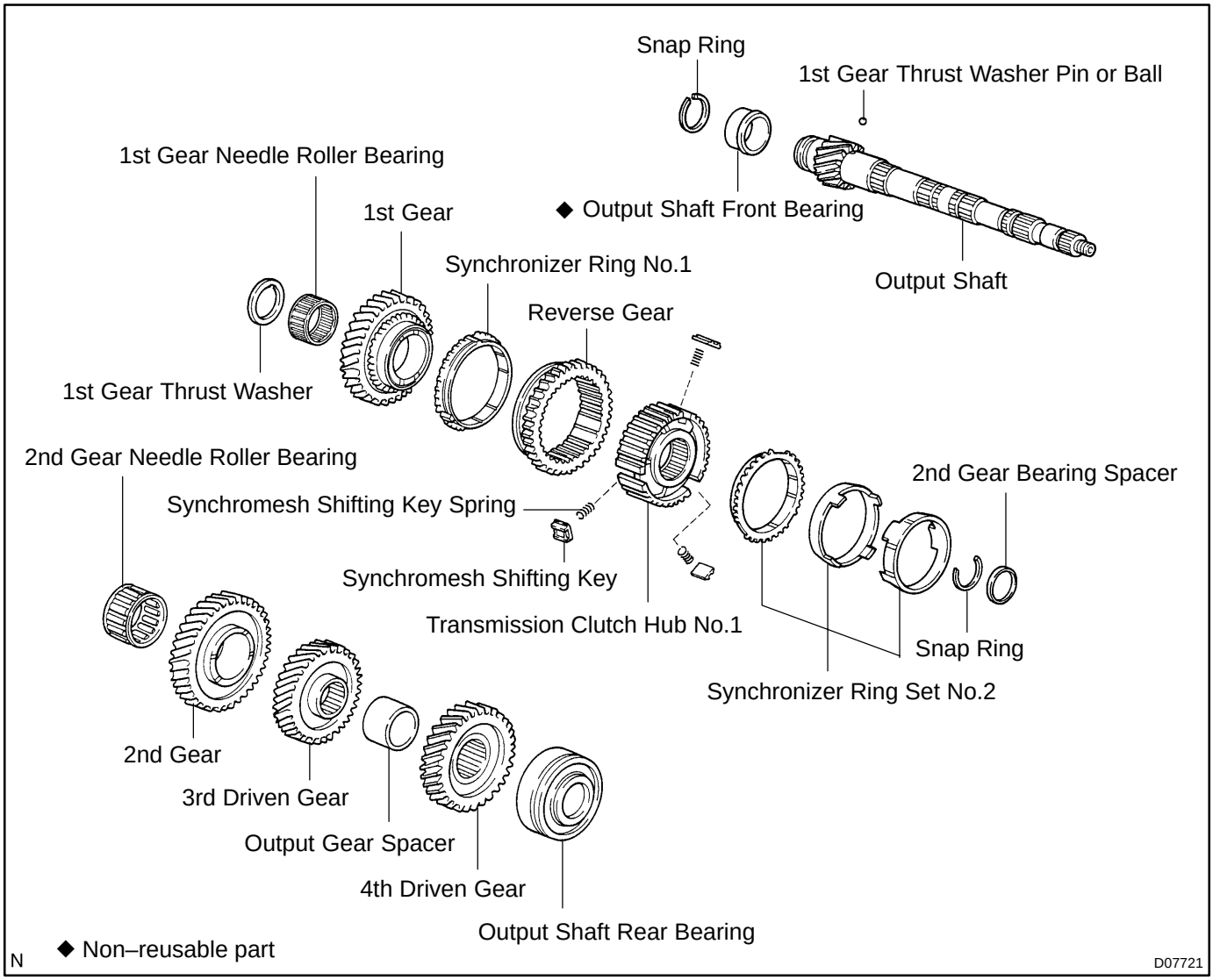

OVERHAUL

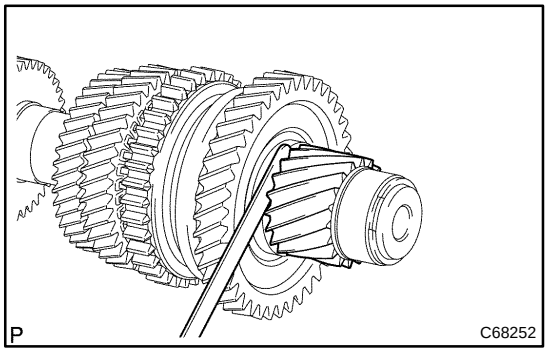

1. INSPECT 1ST GEAR THRUST CLEARANCE

(a) Using a feeler gauge, measure the 1st gear thrust clearance.

Standard clearance:
0.10 – 0.40 mm (0.0039 – 0.0157 in.)

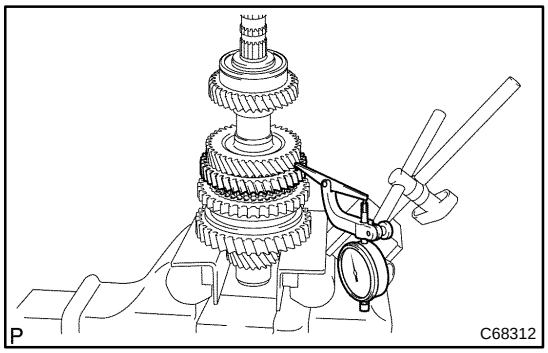

2. INSPECT 2ND GEAR THRUST CLEARANCE

(a) Using a dial indicator, measure the 2nd gear thrust clearance.

Standard clearance:
0.10 – 0.45 mm (0.0039 – 0.0177 in.)

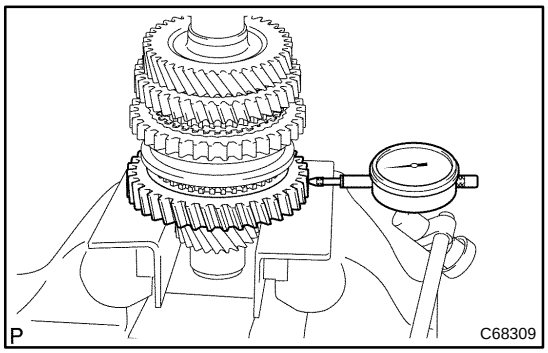

3. INSPECT 1ST GEAR RADIAL CLEARANCE

(a) Using a dial indicator, measure the 1st gear radial clearance.

Standard clearance:

Bearing	Clearance: mm (in.)
KOYO made	0.015 – 0.058 (0.0006 – 0.0023)
NSK made	0.015 – 0.056 (0.0006 – 0.0022)

If the clearance is out of specification, replace the 1st gear needle roller bearing.

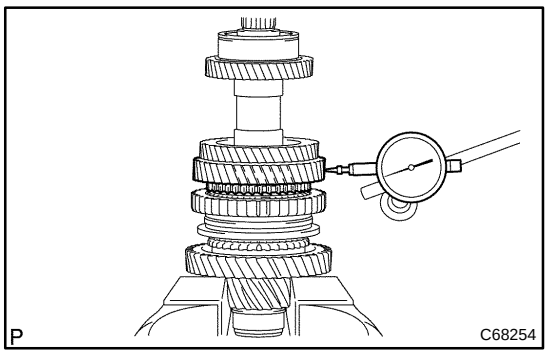

4. INSPECT 2ND GEAR RADIAL CLEARANCE

(a) Using a dial indicator, measure the 2nd gear radial clearance.

Standard clearance:

Bearing	Clearance: mm (in.)
KOYO made	0.015 – 0.058 (0.0006 – 0.0023)
NSK made	0.015 – 0.056 (0.0006 – 0.0022)

If the clearance is out of specification, replace the 2nd gear needle roller bearing.

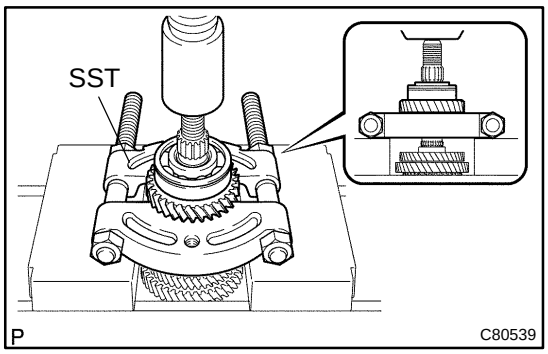

5. REMOVE 4TH DRIVEN GEAR

(a) Using SST and a press, remove the output shaft rear bearing with 4th driven gear from the output shaft.
SST 09950–00020

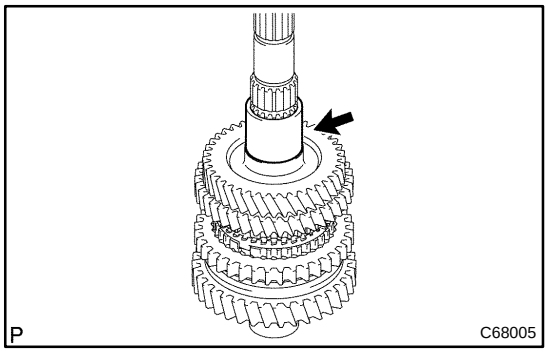

6. REMOVE OUTPUT GEAR SPACER

(a) Remove the output gear spacer from the output shaft.

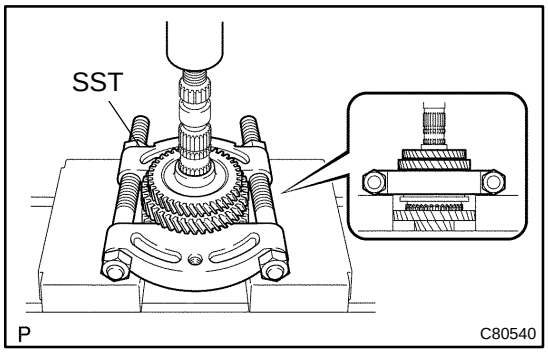

7. REMOVE 2ND GEAR

(a) Using SST and a press, remove the 3rd driven gear with 2nd gear from the output shaft.
SST 09950–00020

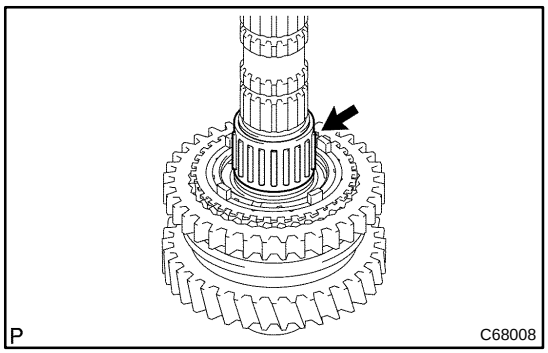

8. REMOVE 2ND GEAR NEEDLE ROLLER BEARING

(a) Remove the 2nd gear needle roller bearing from the output shaft.

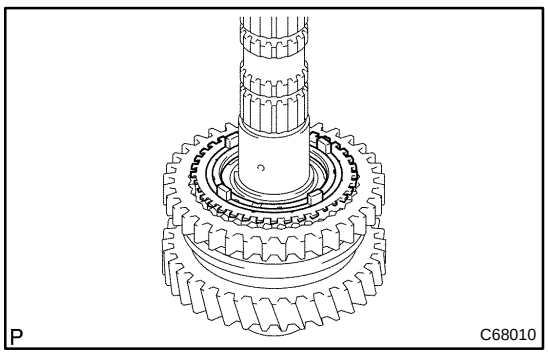

9. REMOVE SYNCHRONIZER RING SET NO.2

(a) Remove the synchronizer ring set No.2 from the output shaft.

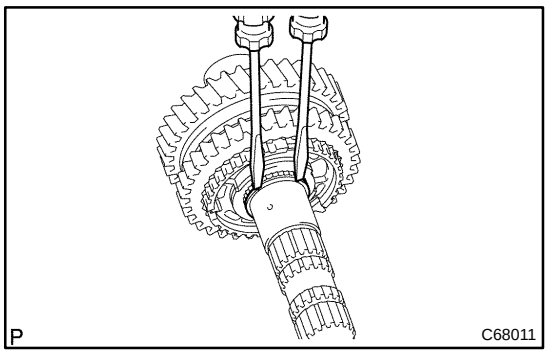

10. REMOVE 1ST GEAR

(a) Using 2 screwdrivers and a hammer, tap out the snap ring.

HINT:

Using a waste to prevent the snap ring from being scattered.

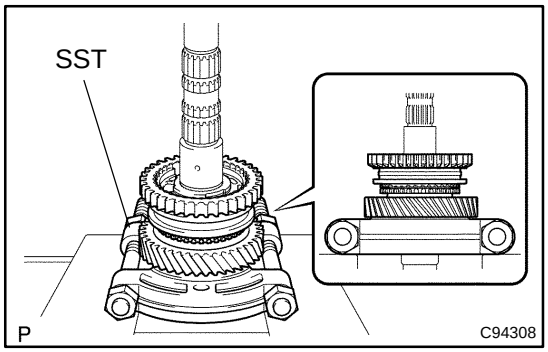

(b) Using SST and a press, remove the transmission clutch hub No.1 with 1st gear from the output shaft.

SST 09950–00020

NOTICE:

- **Do not tighten SST excessively.**
- **Support the input shaft by hand so that it will not be dropped off.**

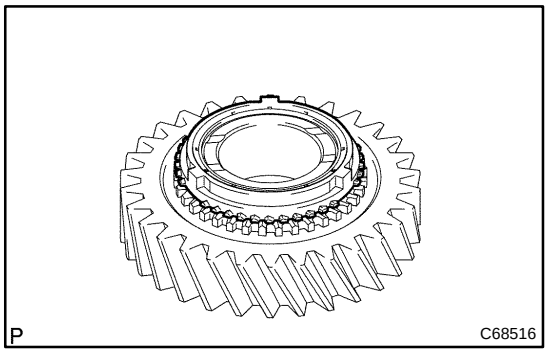

11. REMOVE SYNCHRONIZER RING NO.1

(a) Remove the synchronizer ring No.1 from the 1st gear.

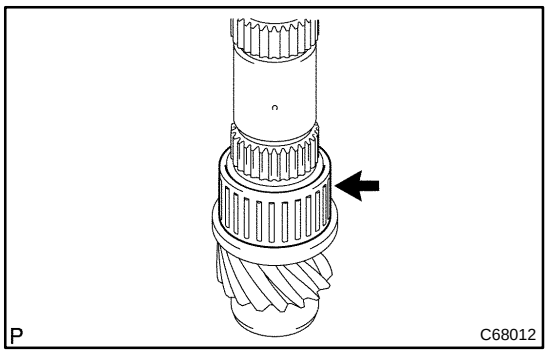

12. REMOVE 1ST GEAR NEEDLE ROLLER BEARING

(a) Remove the 1st gear needle roller bearing from the output shaft.

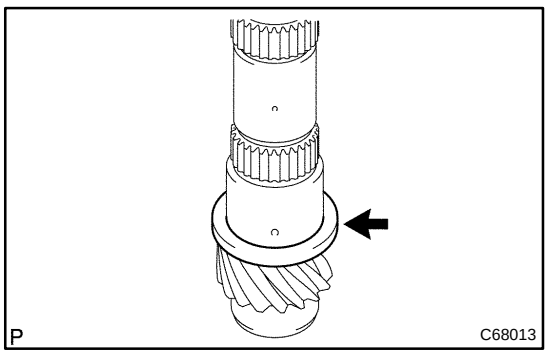

13. REMOVE 1ST GEAR THRUST WASHER

(a) Remove the 1st gear thrust washer from the output shaft.

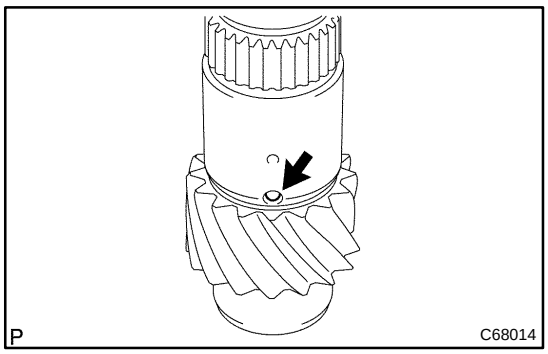

14. REMOVE 1ST GEAR THRUST WASHER PIN OR BALL

(a) Remove the 1st gear thrust washer pin or ball from the output shaft.

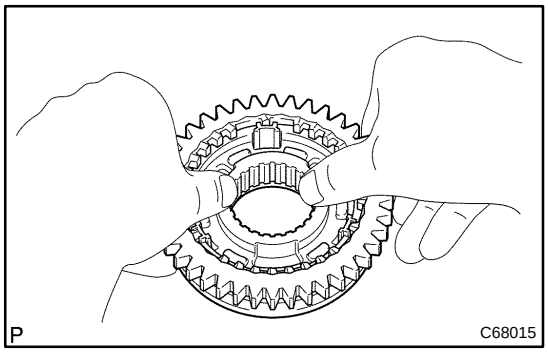

15. REMOVE REVERSE GEAR

(a) Remove the 3 synchromesh shifting keys, 3 synchromesh shifting key springs and reverse gear.

NOTICE:

Using a waste to prevent the synchromesh shifting key and spring from being scattered.

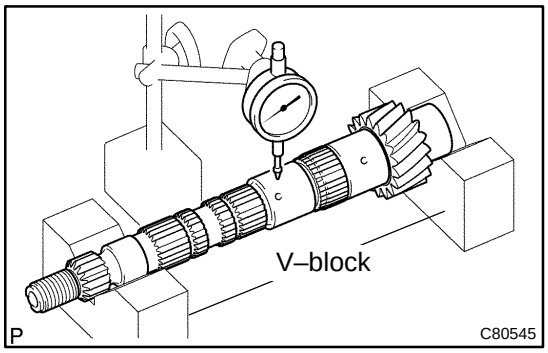

16. INSPECT OUTPUT SHAFT

(a) Using a dial indicator and 2 V–blocks, measure the shaft runout.

Maximum runout: 0.015 mm (0.0006 in.)

If the runout exceeds the maximum, replace the output shaft.

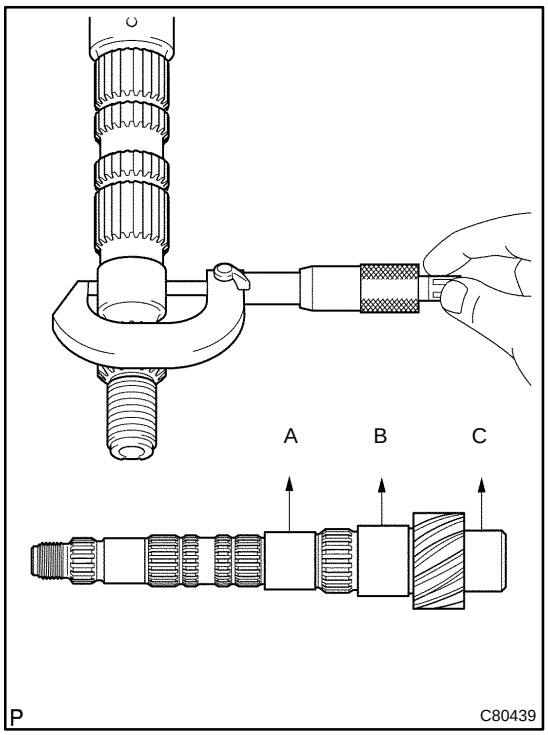

(b) Using a micrometer, measure the outer diameter of the output shaft journal surface.

Outer diameter:

Part A: 31.985 mm (1.2592 in.)

Part B: 37.985 mm (1.4955 in)

Part C: 32.985 mm (1.2986 in)

If the outer diameter is below the minimum, replace the output shaft.

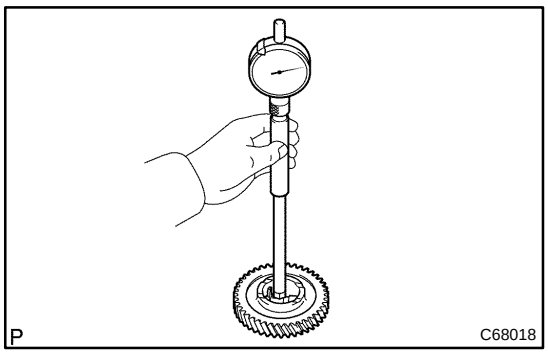

17. INSPECT 2ND GEAR

(a) Using a cylinder gauge, measure the inside diameter of the 2nd gear.

Inside diameter:

New gear: mm (in.)	Maximum inside diameter: mm (in.)
38.015 – 38.031 (1.4967 – 1.4973)	38.031 (1.4973)

If the inside diameter exceeds the maximum, replace the 2nd gear.

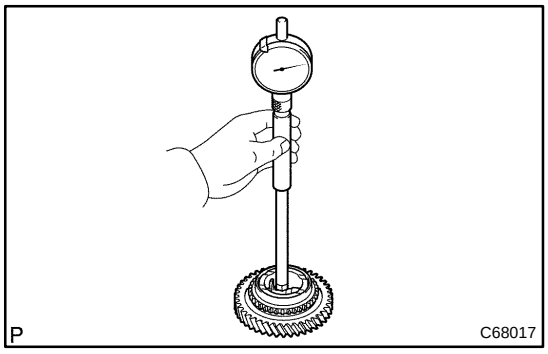

18. INSPECT 1ST GEAR

(a) Using a cylinder gauge, measure the inside diameter of the 1st gear.

Inside diameter:

New gear: mm (in.)	Maximum inside diameter: mm (in.)
44.015 – 44.031 (1.7329 – 1.7335)	44.031 (1.7335)

If the inside diameter exceeds the maximum, replace the 1st gear.

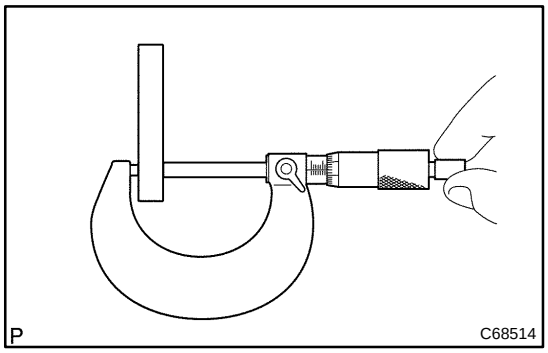

19. INSPECT 1ST GEAR THRUST WASHER

(a) Using a micrometer, measure the thickness of 1st gear thrust washer.

Thickness:

New thrust washer: mm (in.)	Minimum thickness: mm (in.)
5.975 – 6.025 (0.2352 – 0.2372)	5.975 (0.2352)

If the thickness is below the minimum, replace the 1st gear thrust washer.

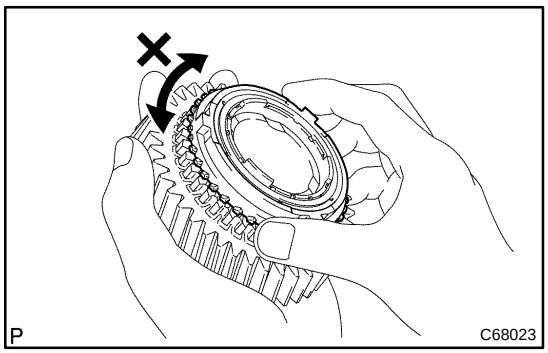

20. INSPECT SYNCHRONIZER RING SET NO.2

(a) Coat the 2nd gear cone with gear oil.
Check the braking effect of the synchronizer ring set No.2.

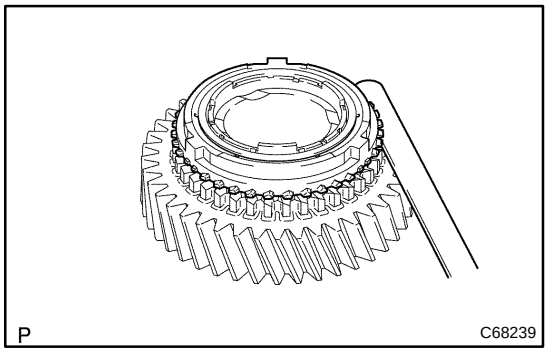

(b) Using a feeler gauge, measure the clearance between the synchronizer ring back and gear spline end.
Standard clearance: 0.7 – 1.3 mm (0.0276 – 0.0512)

If the clearance is out of specification, replace the synchronizer ring set No.2.

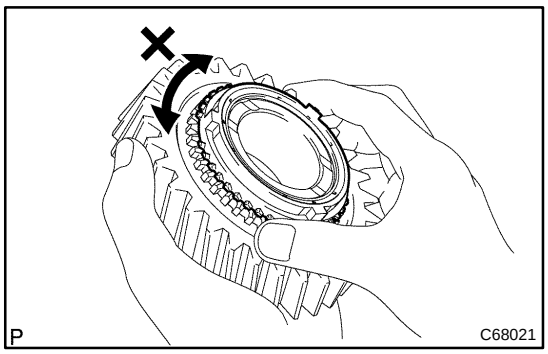

21. INSPECT SYNCHRONIZER RING NO.1

(a) Coat the 1st gear cone with gear oil.
Check the braking effect of the synchronizer ring No.1.

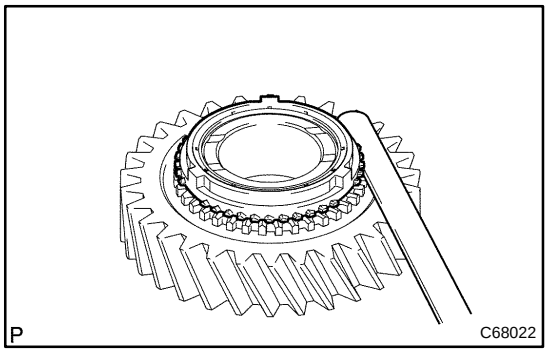

(b) Using a feeler gauge, measure the clearance between the synchronizer ring back and gear spline end.
Standard clearance: 0.75 – 1.65 mm (0.0295 – 0.065)

If the clearance is out of specification, replace the synchronizer ring No.1.

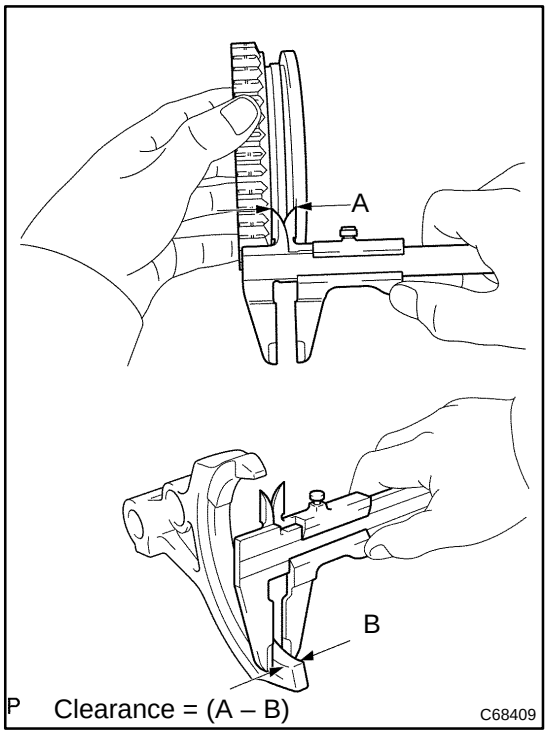

22. INSPECT REVERSE GEAR

(a) Using a vernier caliper gauge, measure the clearance between reverse gear and shift fork.
Standard clearance:
0.15 – 0.35 mm (0.0059 – 0.0138 in.)

If the clearance is out of specification, replace the reverse gear and reverse shift fork.

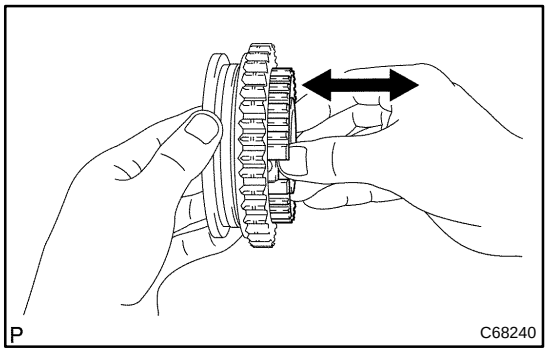

23. INSPECT TRANSMISSION CLUTCH HUB NO.1

(a) Check that the transmission clutch hub No.1 and reverse gear sub–assy slides smoothly.

(b) Check that the spline gear's edges of the reverse gear sub–assy is not worn down.

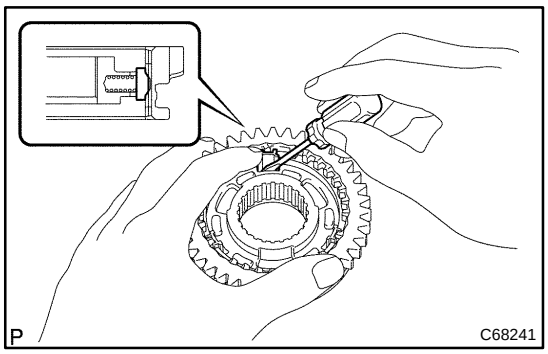

24. INSTALL REVERSE GEAR

(a) Coat the reverse gear with gear oil, install it to the transmission clutch hub No.1.

NOTICE:

Be sure to set the reverse gear and transmission clutch hub No.1 in incorrect orientation.

(b) Using a screwdriver, install the 3 synchromesh shifting key springs and 3 synchromesh shifting keys.

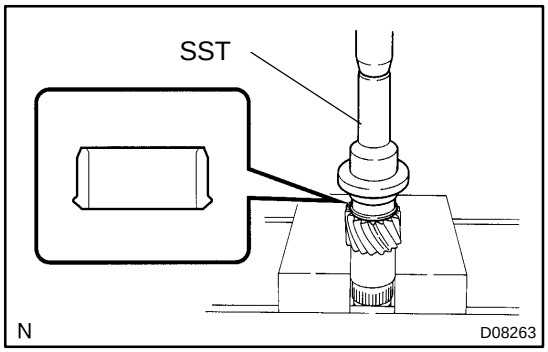

25. INSTALL OUTPUT SHAFT FRONT BEARING

(a) Using SST and a press, install the output shaft front bearing (inner race) to the output shaft.

SST 09223–50010

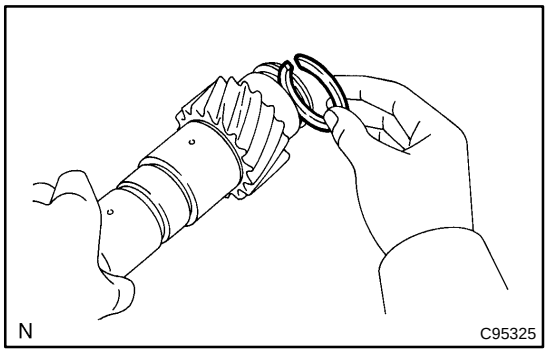

(b) Select a snap ring from the table below that will make the thrust clearance of the output shaft front bearing (inner race) below 0.1 mm (0.004 in.).

Snap ring thickness:

Part No.	Thickness: mm (in.)	Mark
90520 – 30032	1.85 – 1.90 (0.0728 – 0.0748)	7
90520 – 30033	1.90 – 1.95 (0.0748 – 0.0768)	8
90520 – 30002	1.95 – 2.00 (0.0768 – 0.0787)	1
90520 – 30003	2.00 – 2.05 (0.0787 – 0.0807)	2
90520 – 30004	2.05 – 2.10 (0.0807 – 0.0827)	3
90520 – 30005	2.10 – 2.15 (0.0827 – 0.0846)	4
90520 – 30006	2.15 – 2.20 (0.0846 – 0.0866)	5
90520 – 30007	2.20 – 2.25 (0.0866 – 0.0886)	6

(c) Using a brass bar and a hammer, tap in the snap ring.

NOTICE:

Take care not to damage the journal surface of the output shaft.

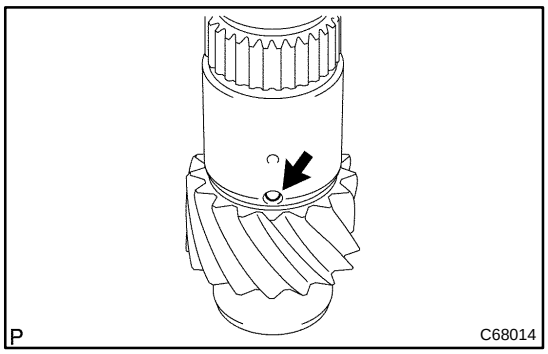

26. INSTALL 1ST GEAR THRUST WASHER PIN OR BALL

(a) Coat the 1st gear thrust washer pin or ball with MP grease, install it to the output shaft.

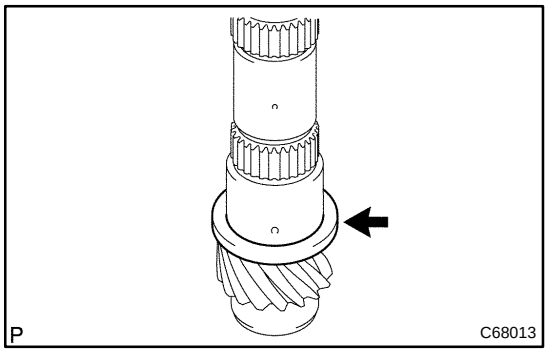

27. INSTALL 1ST GEAR THRUST WASHER

(a) Coat the 1st gear thrust washer with gear oil, install it to the output shaft.

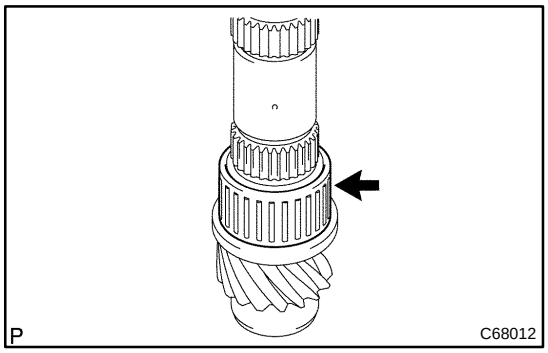

28. INSTALL 1ST GEAR NEEDLE ROLLER BEARING

(a) Coat the 1st gear needle roller bearing with gear oil, install it to the output shaft.

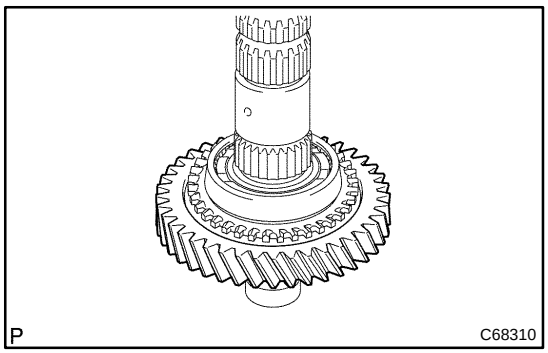

29. INSTALL 1ST GEAR

(a) Coat the 1st gear with gear oil, install it to the output shaft.

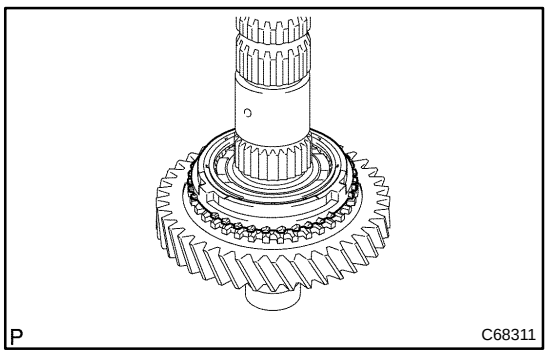

30. INSTALL SYNCHRONIZER RING NO.1

(a) Coat the synchronizer ring No.1 with gear oil, install it to the 1st gear.

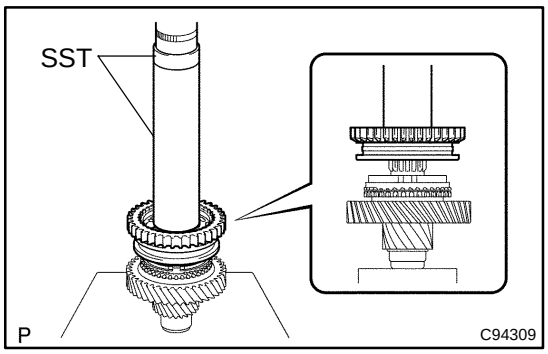

31. INSTALL TRANSMISSION CLUTCH HUB NO.1

(a) Using SST and a press, install the transmission clutch hub No.1 to the output shaft.
SST 09316–60011 (09316–00031)

NOTICE:
The 1st gear can be turned.

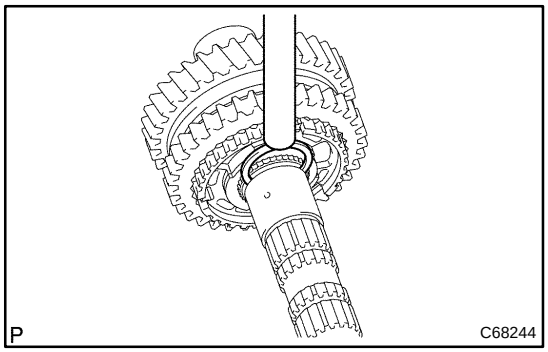

(b) Select a snap ring from the table below that will make the thrust clearance of the transmission clutch hub No.1 below 0.1 mm (0.004 in.).

Snap ring thickness:

Part No.	Thickness: mm (in.)	Mark
90520 – 29018	2.50 (0.0984)	A
90520 – 29019	2.56 (0.1008)	B
90520 – 29020	2.62 (0.1031)	C
90520 – 29021	2.68 (0.1055)	D
90520 – 29022	2.74 (0.1079)	E
90520 – 29023	2.80 (0.1102)	F

(c) Using a brass bar and a hammer, install the snap ring to the output shaft.

NOTICE:
Take care not to damage the journal surface of the output shaft.

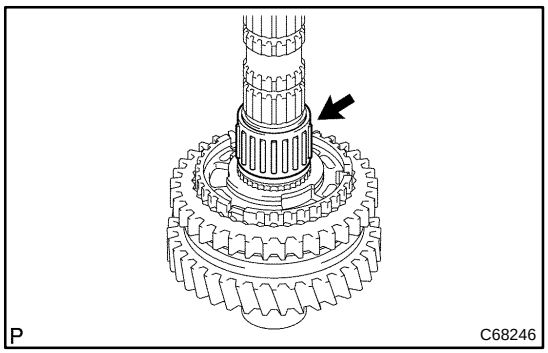

32. INSTALL 2ND GEAR NEEDLE ROLLER BEARING

(a) Coat the 2nd gear needle roller bearing with gear oil, install it to the output shaft.

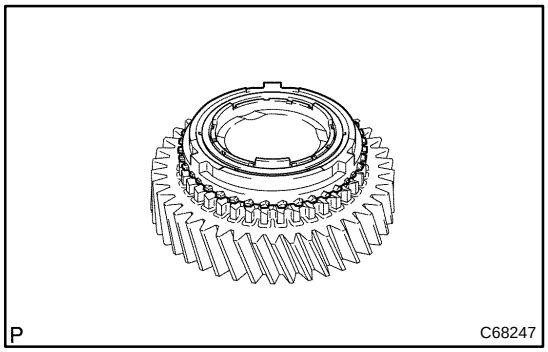

33. INSTALL SYNCHRONIZER RING SET NO.2

(a) Coat the synchronizer ring set No.2 with gear oil, install it to the 2nd gear.

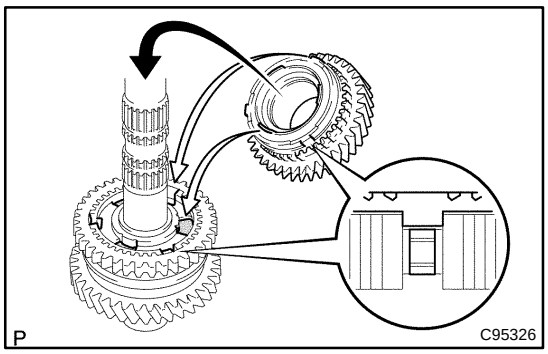

34. INSTALL 2ND GEAR

(a) Coat the 2nd gear with gear oil, install it to the output shaft.

NOTICE:

Fit the synchronizer inner ring claws into the slots in the transmission clutch hub No.1.

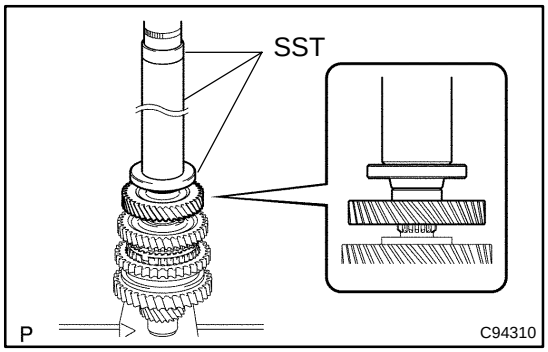

35. INSTALL 3RD DRIVEN GEAR

(a) Using SST and a press, install the 3rd driven gear to the output shaft.

SST 09309–36100 (09309–03610), 09608–00071, 09950–60010 (09951–00450)

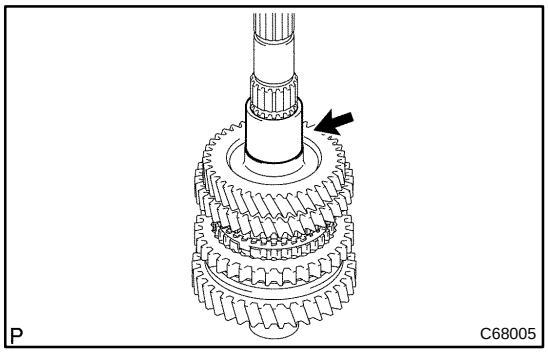

36. INSTALL OUTPUT GEAR SPACER

(a) Install the output gear spacer to the output shaft.

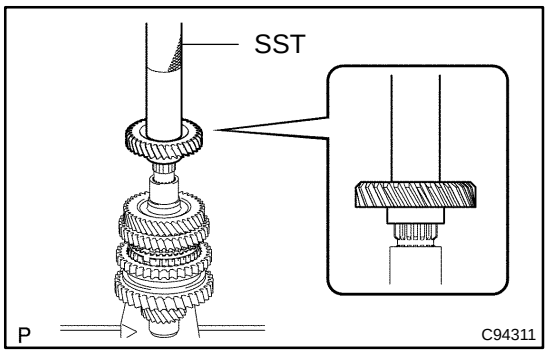

37. INSTALL 4TH DRIVEN GEAR

(a) Using SST and a press, install 4th driven gear to the output shaft.

SST 09612–22011

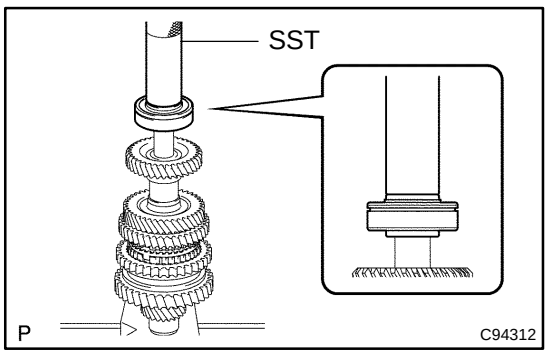

38. INSTALL OUTPUT SHAFT REAR BEARING

(a) Using SST and a press, install output shaft rear bearing to the output shaft.

SST 09612–22011

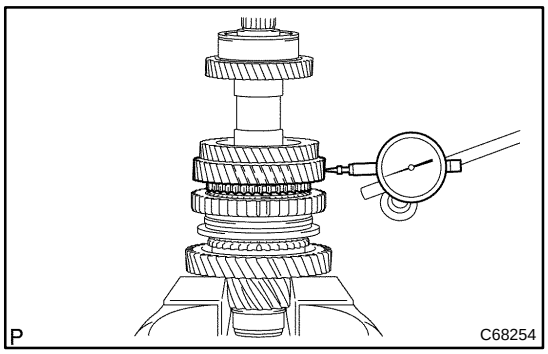

39. INSPECT 2ND GEAR RADIAL CLEARANCE

(a) Using a dial indicator, measure the 2nd gear radial clearance.

Standard clearance:

Bearing	Clearance: mm (in.)
KOYO made	0.015 – 0.058 (0.0006 – 0.0023)
NSK made	0.015 – 0.056 (0.0006 – 0.0022)

If the clearance is out of specification, replace the 2nd gear needle roller bearing.

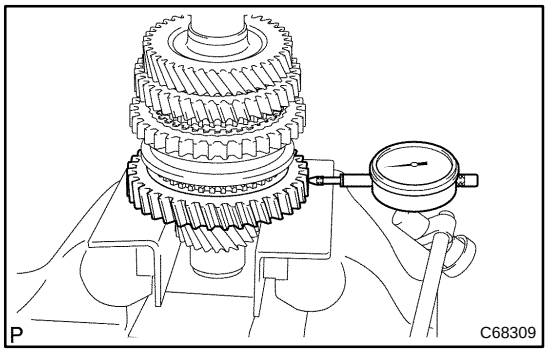

40. INSPECT 1ST GEAR RADIAL CLEARANCE

(a) Using a dial indicator, measure the 1st gear radial clearance.

Standard clearance:

Bearing	Clearance: mm (in.)
KOYO made	0.015 – 0.058 (0.0006 – 0.0023)
NSK made	0.015 – 0.056 (0.0006 – 0.0022)

If the clearance is out of specification, replace the 1st gear needle roller bearing.

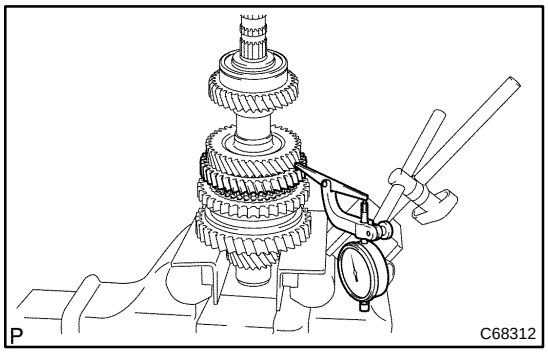

41. INSPECT 2ND GEAR THRUST CLEARANCE

(a) Using a dial indicator, measure the 2nd gear thrust clearance.

Standard clearance:
0.10 – 0.45 mm (0.0039 – 0.0177 in.)

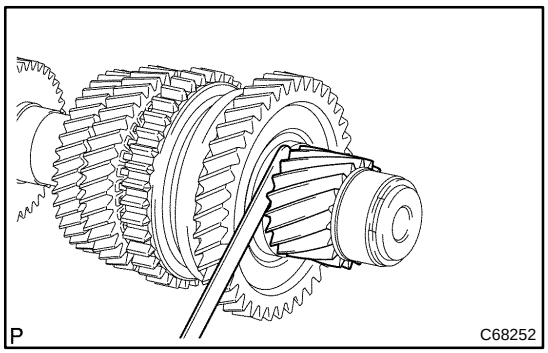

42. INSPECT 1ST GEAR THRUST CLEARANCE

(a) Using a feeler gauge, measure the 1st gear thrust clearance.

Standard clearance:
0.10 – 0.40 mm (0.0039 – 0.0157 in.)

DIFFERENTIAL CASE ASSY (MTM)

4108A–01

COMPONENTS

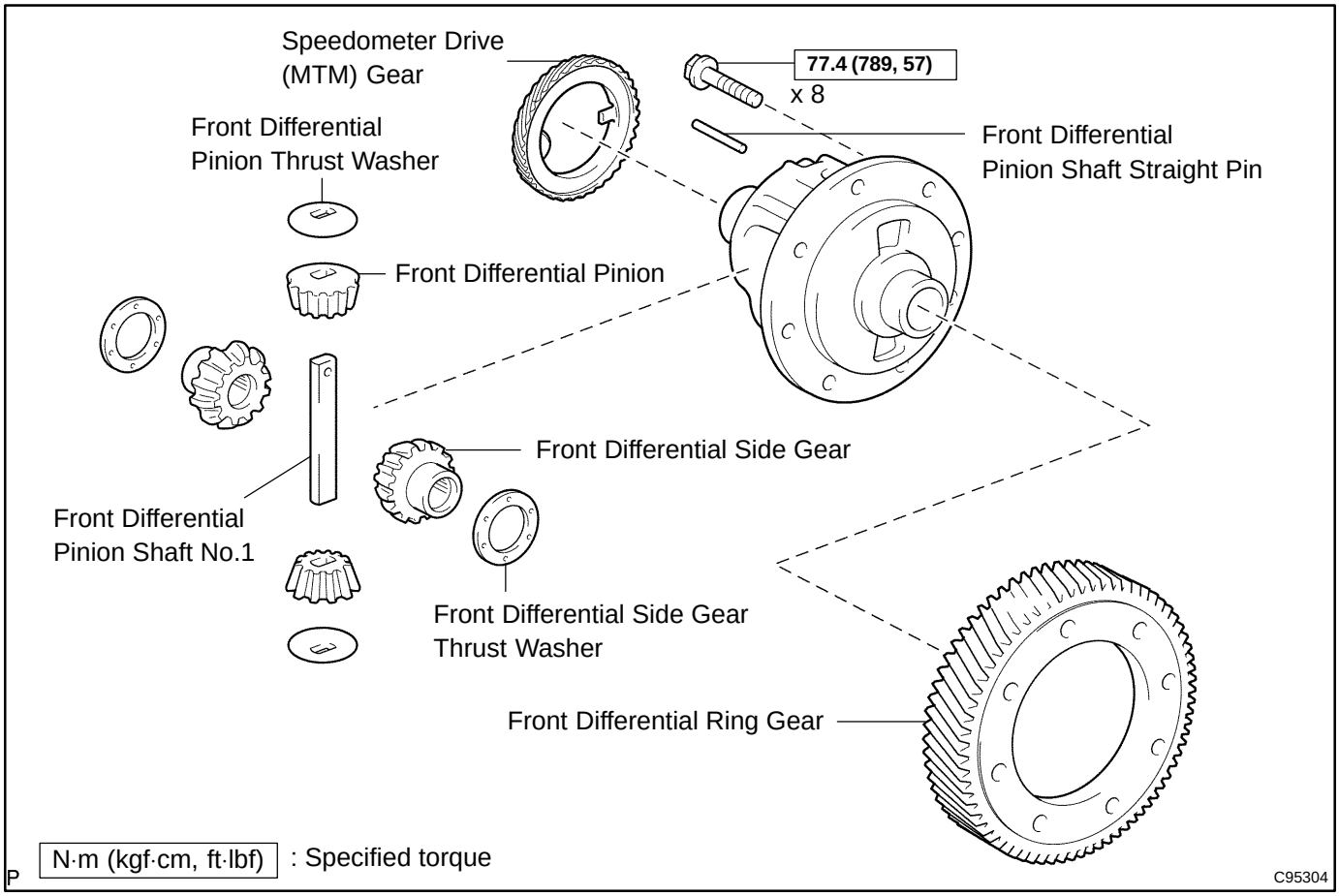

OVERHAUL

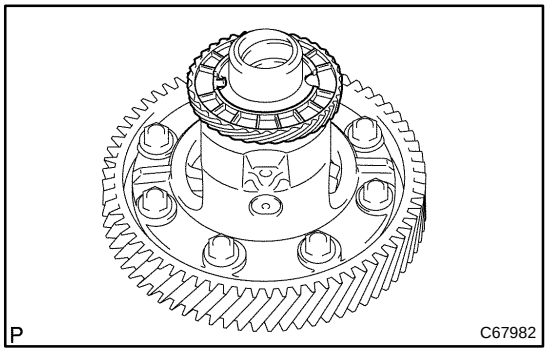

1. REMOVE SPEEDOMETER DRIVE (MTM) GEAR

(a) Remove the speedometer drive (MTM) gear from the front differential case.

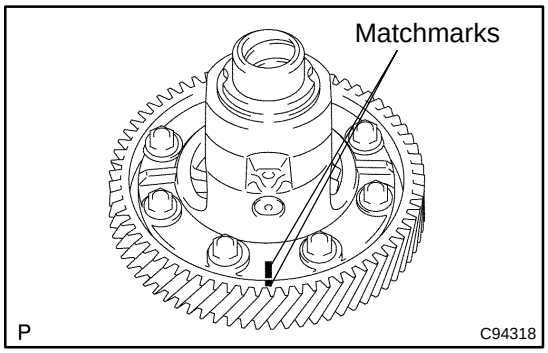

2. REMOVE FRONT DIFFERENTIAL RING GEAR

(a) Place matchmarks on the front differential ring gear and front differential case.

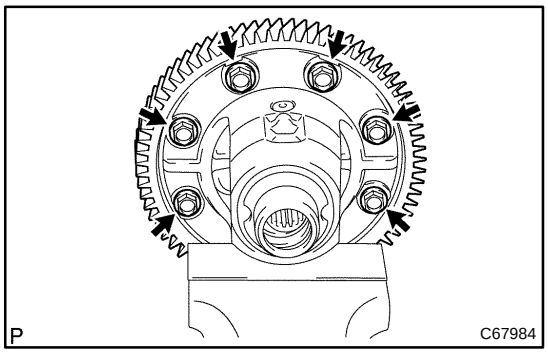

(b) Remove the 8 bolts. Using a hammer, remove the front differential ring gear.

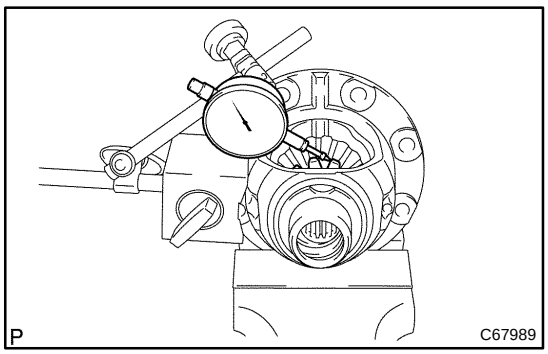

3. INSPECT FRONT DIFFERENTIAL SIDE GEAR BACKLASH

(a) Fixing the front differential pinion from the front differential case side. Using a dial indicator, measure the backlash of the front differential side gear.

Standard backlash:

0.05 – 0.20 mm (0.0020 – 0.0079 in.)

If the backlash is not within the specification, install the connect side gear thrust washers.

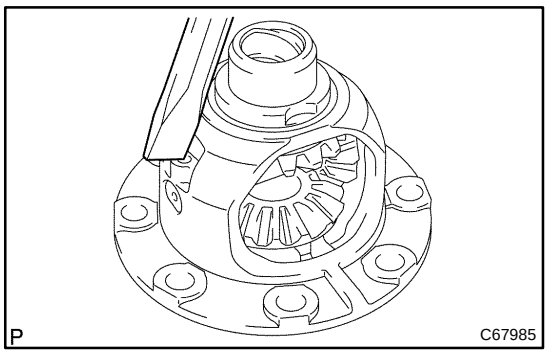

4. REMOVE FRONT DIFFERENTIAL PINION SHAFT STRAIGHT PIN

(a) Using a chisel and a hammer, loosen the staked part of the front differential case.

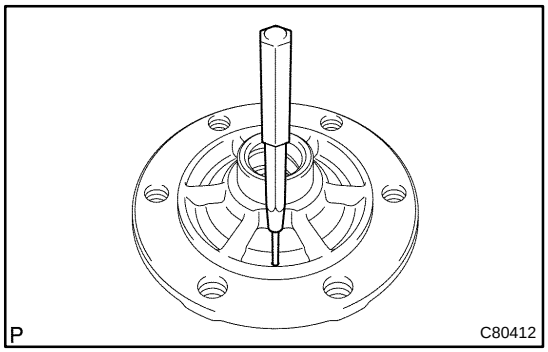

(b) Using a pin punch (ϕ 3 mm) and a hammer, remove the front differential pinion shaft straight pin from the front differential case.

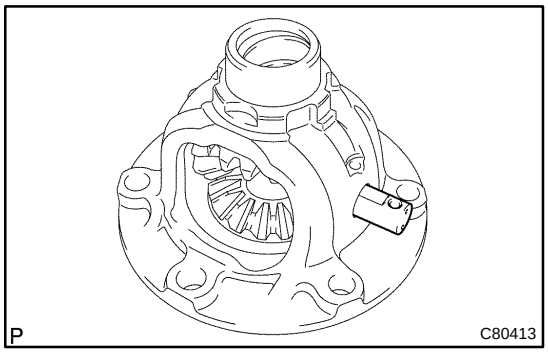

5. REMOVE FRONT DIFFERENTIAL PINION SHAFT NO.1

(a) Remove the front differential pinion shaft No.1 from the front differential case.

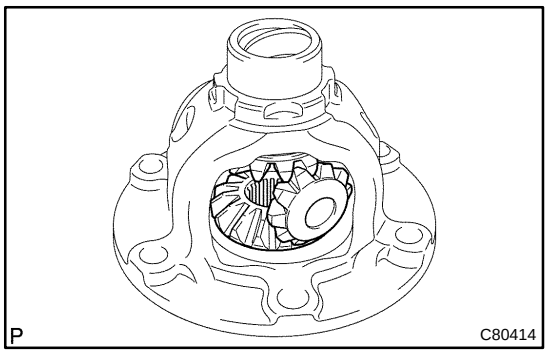

6. REMOVE FRONT DIFFERENTIAL SIDE GEAR

(a) Remove the 2 front differential pinions, 2 front differential pinion thrust washers, 2 front differential side gear thrust washers and 2 front differential side gears from the front differential case.

HINT:
Turning the front differential pinion, remove the 2 pinions and side gear.

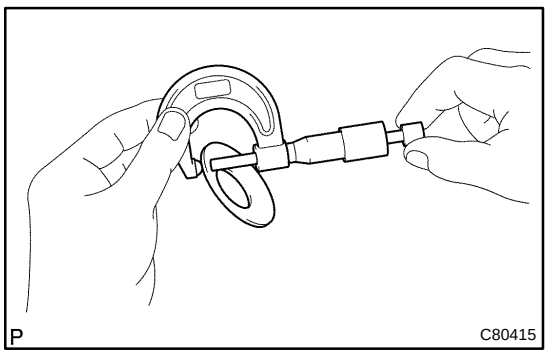

7. INSPECT FRONT DIFFERENTIAL PINION THRUST WASHER

(a) Using a micrometer, measure the thickness of the front differential pinion thrust washer.

Minimum thickness: 0.92 mm (0.0362 in.)

If the clearance is below the minimum, replace the front differential pinion thrust washer.

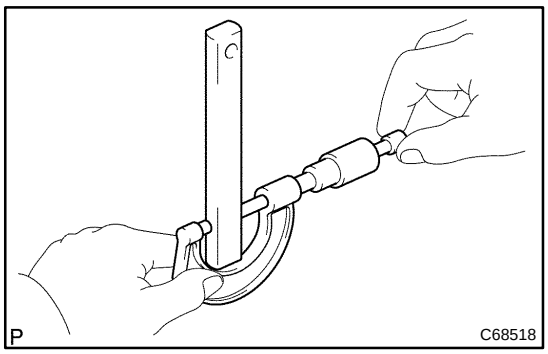

8. INSPECT FRONT DIFFERENTIAL PINION SHAFT NO.1

(a) Using a micrometer, measure the the outer diameter of the front differential pinion shaft No.1.

Minimum outer diameter: 16.982 mm (0.6686 in.)

If the outer diameter is less than the minimum, replace the front differential pinion shaft No.1.

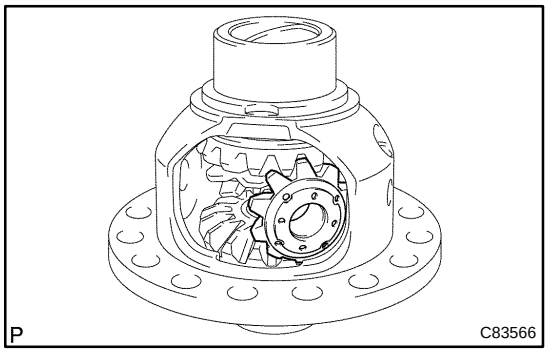

9. INSTALL FRONT DIFFERENTIAL SIDE GEAR

(a) Coat the sliding and rotating surface of the 2 front differential side gears with MP grease.

(b) Install the 2 front differential side gear thrust washers to the 2 front differential side gear.

HINT:

Install the front differential side gear thrust washer that has the same thickness as the removed one.

(c) Install the 2 front differential side gears, 2 front differential pinions and 2 front differential side gear thrust washers to the front differential case.

HINT:

Turning the front differential pinion, install the 2 front differential pinions with front differential case.

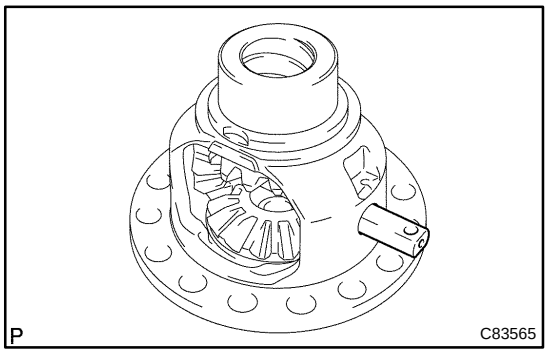

10. INSTALL FRONT DIFFERENTIAL PINION SHAFT NO.1

(a) Coat the rotating surface of the front differential pinion shaft No.1 with gear oil.

(b) Install the front differential pinion shaft No.1 to the front differential case so that the hole for the front differential pinion shaft straight pin is aligned with the hole in the front differential case.

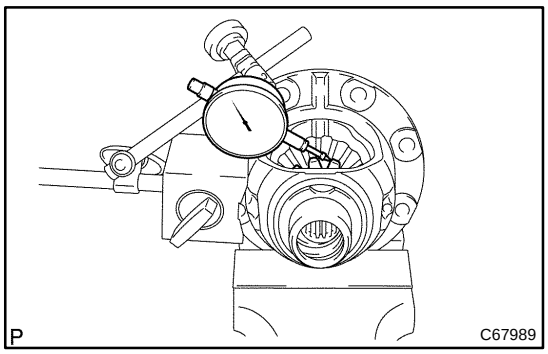

11. ADJUST FRONT DIFFERENTIAL SIDE GEAR BACKLASH

(a) Fixing the front differential pinion to the front differential case side. Using a dial indicator, measure the front differential side gear backlash.

Standard backlash:

0.05 – 0.20 mm (0.0020 – 0.0079 in.)

If the backlash is out of specification, replace the side gear thrust washer.

Thrust washer thickness:

Part No.	Thickness: mm (in.)
41361 – 22140	0.95 (0.0374)
41361 – 22020	1.00 (0.0394)
41361 – 22150	1.05 (0.0413)
41361 – 22030	1.10 (0.0433)
41361 – 22160	1.15 (0.0453)
41361 – 22040	1.20 (0.0472)

HINT:

- Because the thrust washer does not have any identification mark, measure the front thickness with a micrometer to select a proper thrust washer.
- Select washers that has the same thickness as both the right and left.

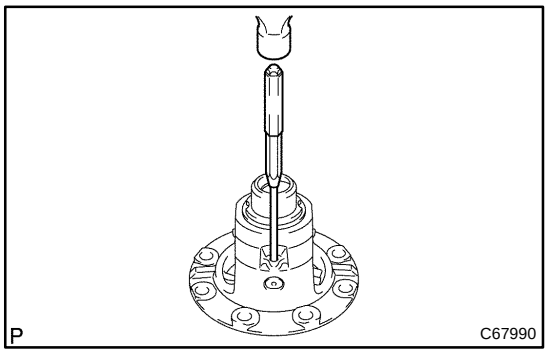

12. INSTALL FRONT DIFFERENTIAL PINION SHAFT STRAIGHT PIN

(a) Using a pin punch (ϕ 3 mm) and a hammer, install the front differential pinion shaft straight pin to the front differential case.

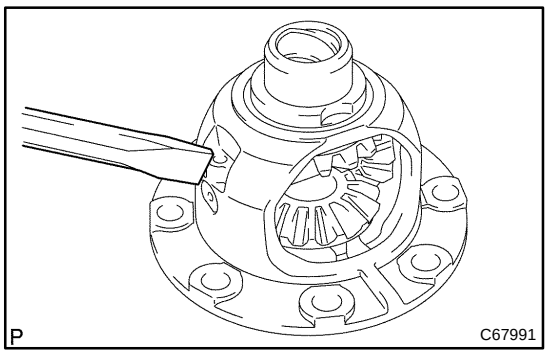

(b) Using a chisel and a hammer, stake the front case hole.

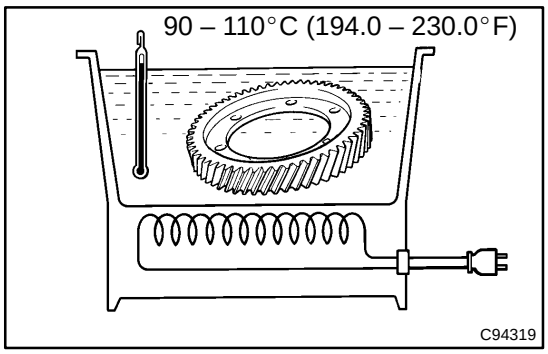

13. INSTALL FRONT DIFFERENTIAL RING GEAR

(a) Using a heater, heat the front differential ring gear to 90 – 110°C (194.0 – 230.0°F)

(b) Clean the contact surface of the front differential case.

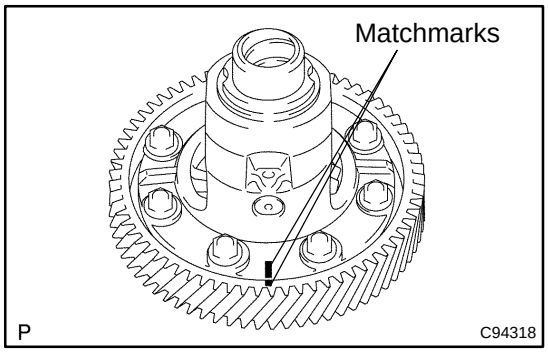

(c) Align the both matchmarks, quickly install the 8 bolts with the front differential ring gear to the front differential case.
Torque: 77.4 N·m (789 kgf·cm, 57 ft·lbf)

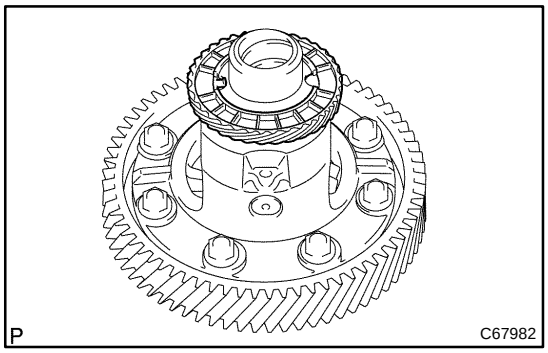

14. INSTALL SPEEDOMETER DRIVE (MTM) GEAR

(a) Install the speedometer drive (MTM) gear to the front differential case.

SHIFT & SELECT LEVER SHAFT ASSY (C59)

4108C–01

COMPONENTS

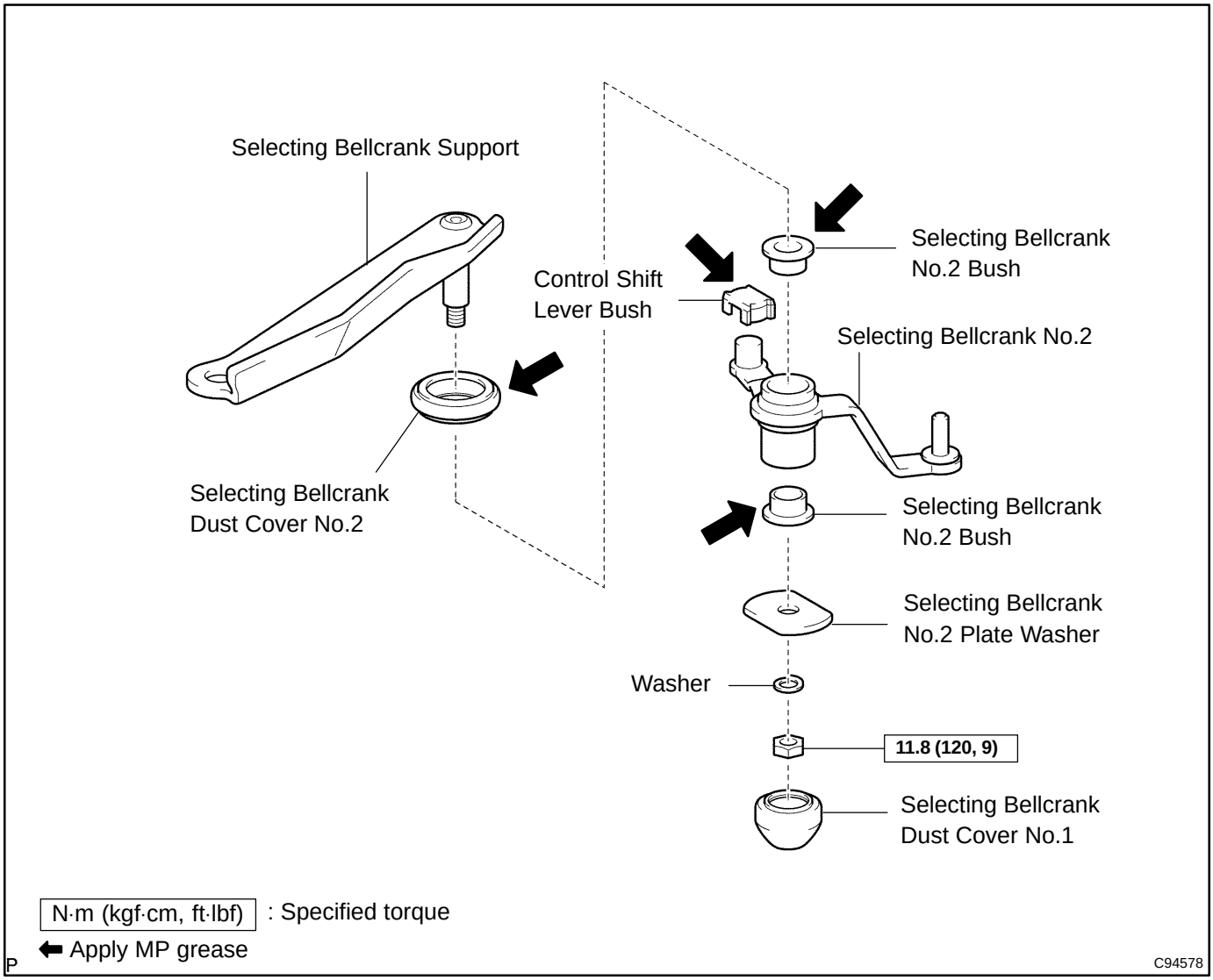

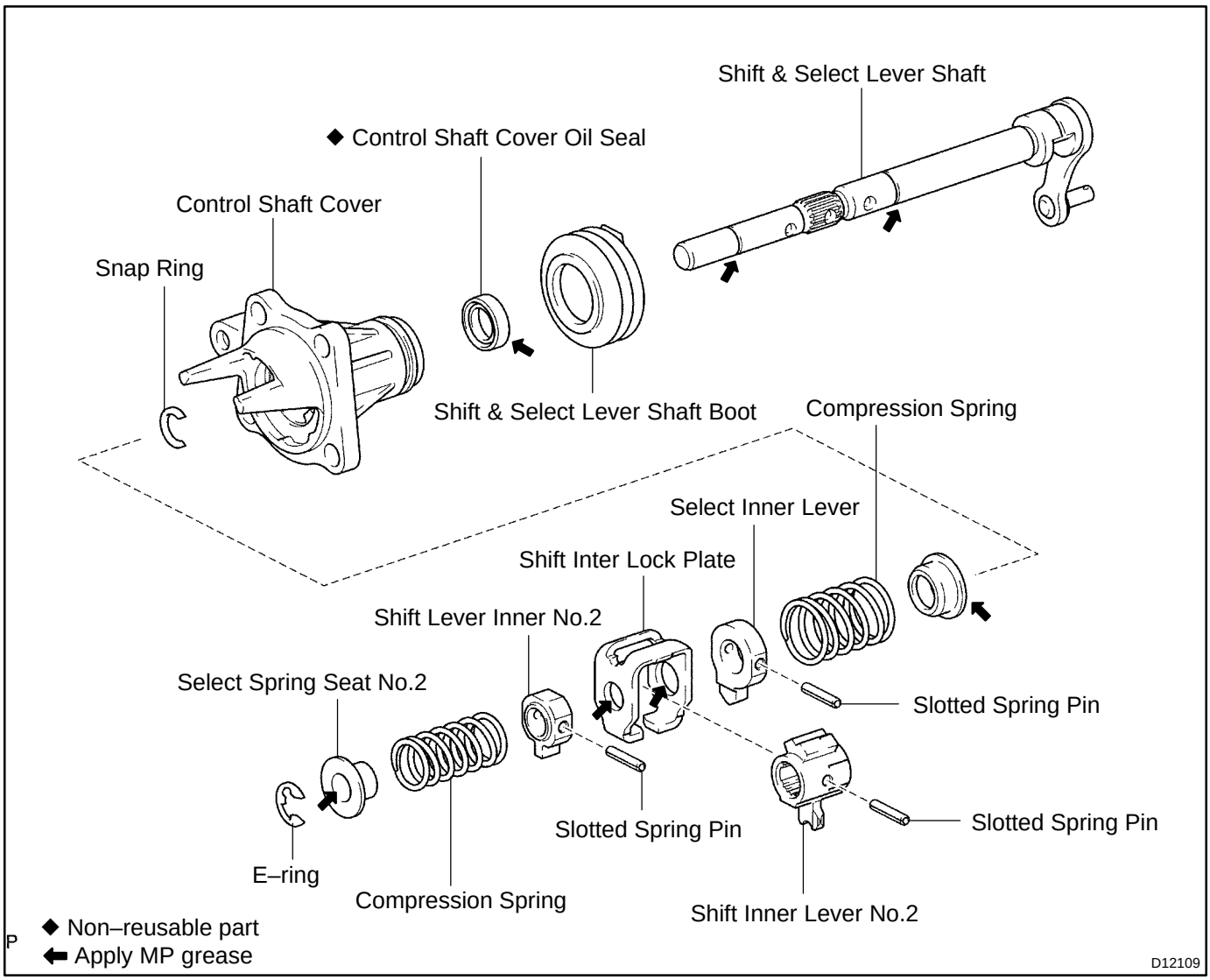
Shift & Select Lever Shaft
◆ Control Shaft Cover Oil Seal
Control Shaft Cover
Snap Ring
Shift & Select Lever Shaft Boot
Compression Spring
Select Inner Lever
Shift Inter Lock Plate
Shift Lever Inner No.2
Select Spring Seat No.2
Slotted Spring Pin
Slotted Spring Pin
Slotted Spring Pin
E–ring
Compression Spring
Shift Inner Lever No.2
◆ Non–reusable part
Apply MP grease
P
D12109

4108D–01

OVERHAUL

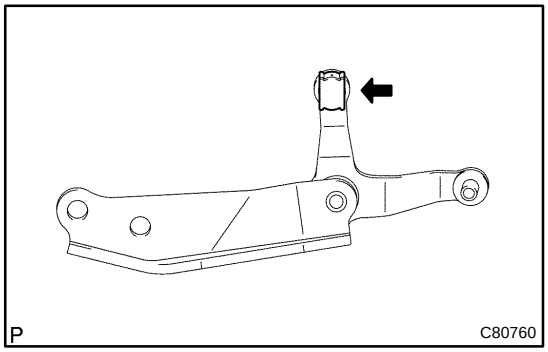

1. REMOVE CONTROL SHIFT LEVER BUSH

(a) Remove the control shift lever bush from the selecting bellcrank assy.

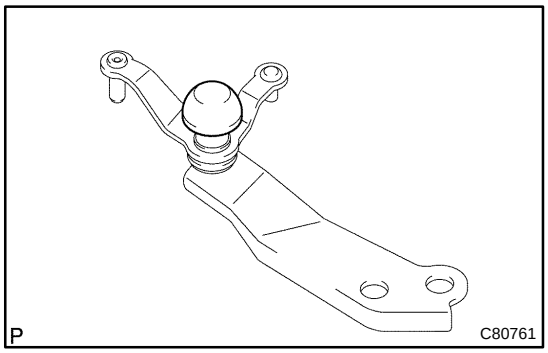

2. REMOVE SELECTING BELLCRANK DUST COVER NO.1

(a) Remove the selecting bellcrank dust cover No.1 from the selecting bellcrank assy.

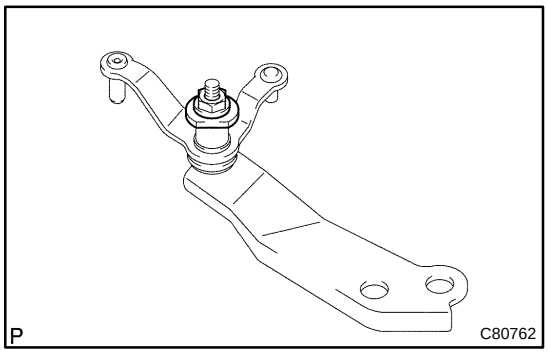

3. REMOVE SELECTING BELL CRANK NO.2

(a) Remove the nut, spring washer and selecting bellcrank No.2 plate washer.

(b) Remove the selecting bellcrank No.2 from the selecting bellcrank support.

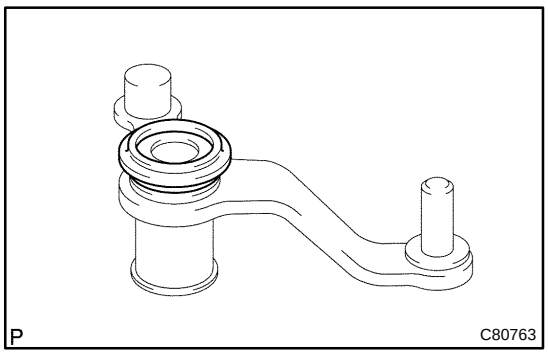

4. REMOVE SELECTING BELLCRANK DUST COVER NO.2

(a) Remove the selecting bellcrank dust cover No.2 from the selecting bellcrank No.2.

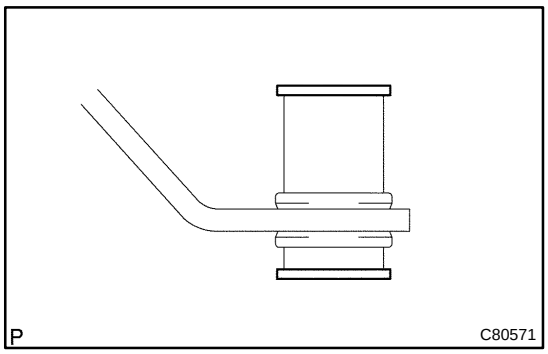

5. REMOVE SELECTING BELLCRANK NO.2 BUSH

(a) Remove the 2 selecting bellcrank No.2 bushes from the selecting bellcrank No.2.

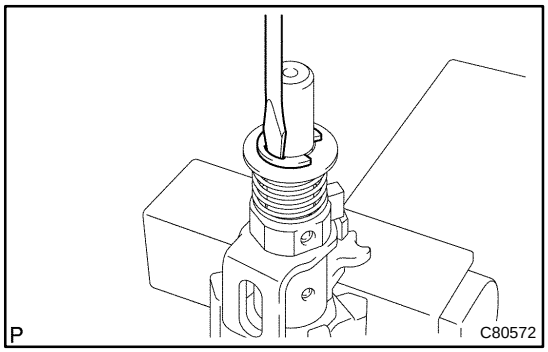

6. REMOVE SELECT SPRING SEAT NO.2

(a) Using a screwdriver, remove the E–ring, select spring seat No.2 and select return spring No.2 from the shift & select lever shaft.

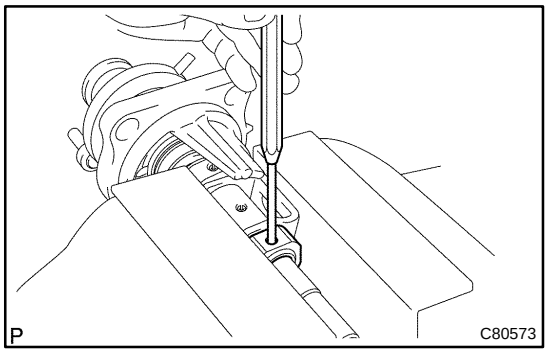

7. REMOVE SHIFT LEVER INNER NO.2

(a) Using a pin punch (ϕ 5 mm) and a hammer, remove the slotted pin and shift lever inner No.2 from the shift & select lever shaft.

HINT:

Make sure the orientation of the shift lever inner No.2.

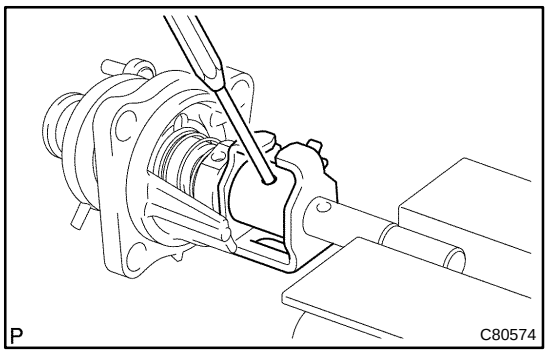

8. REMOVE SHIFT LEVER INNER NO.1

(a) Using a pin punch (ϕ 5 mm) and a hammer, remove the slotted pin, shift lever inner No.1 and shift inter lock plate from the shift & select lever shaft.

HINT:

Make sure the orientation of the shift lever inner No.1.

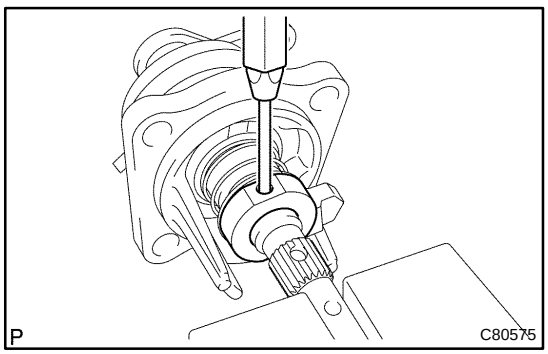

9. REMOVE SELECT INNER LEVER

(a) Using a pin punch (ϕ 5 mm) and a hammer, remove the slotted pin, select inner lever, select return spring No.1 and select return spring seat No.1.

HINT:

Make sure the orientation of the select inner lever.

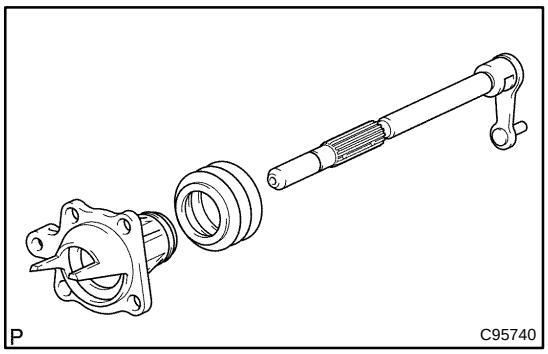

10. REMOVE CONTROL SHAFT COVER

(a) Using 2 screwdrivers and a hammer, tap out the snap ring.

(b) Remove the control shaft cover and shift & select lever shaft dust boot.

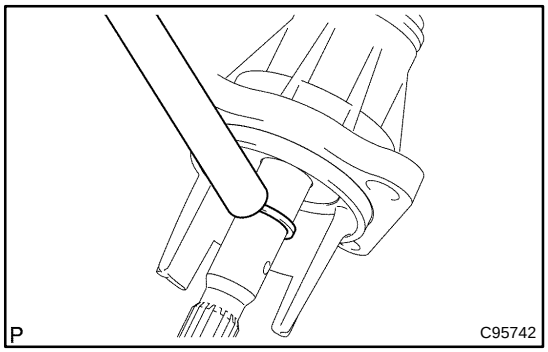

11. REMOVE CONTROL SHAFT COVER OIL SEAL

(a) Using a screwdriver, remove the control shaft cover oil seal from the control shaft cover.

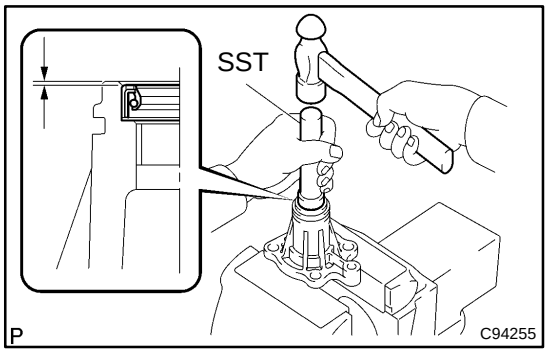

12. INSTALL CONTROL SHAFT COVER OIL SEAL

(a) Using SST and a hammer, install a new control shaft cover oil seal to the control shaft cover.

SST 09950–60010 (09951–00220), 09950–70010 (09951–07100)

Drive in depth: 0.7 ± 0.5 mm (0.0276 ± 0.0197 in.)

(b) Coat the lip of control shaft cover oil seal with MP grease.

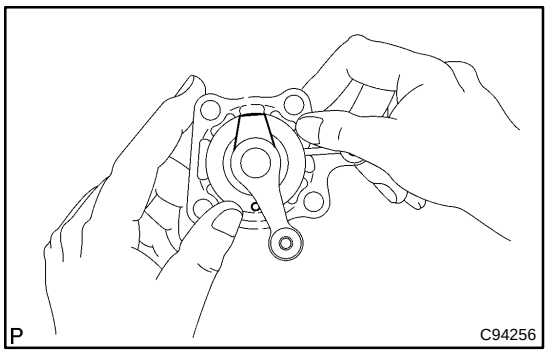

13. INSTALL CONTROL SHAFT COVER

(a) Coat the shift & select lever shaft boot with MP grease, install it to the control shaft cover.

(b) Install the control shaft cover to the shift & select lever.

HINT:

Install the dust boot with the projection up and the hole side down.

(c) Coat the shift & select lever shaft with MP grease.

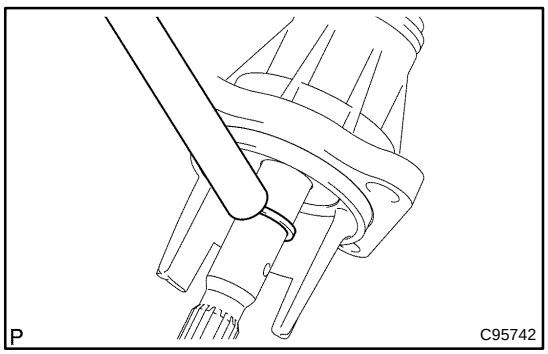

(d) Using a brass bar and a hammer, tap in the snap ring to the shift & select lever shaft.

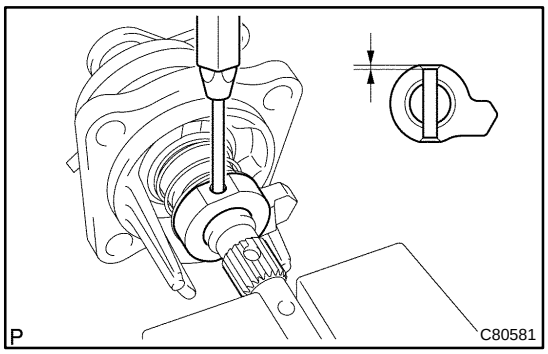

14. INSTALL SELECT INNER LEVER

(a) Coat the select spring seat No.1 with MP grease, install it to the shift & select lever shaft.

(b) Install the select return spring and select inner lever to the shift & select lever shaft.

(c) Using a pin punch (ϕ 5 mm) and a hammer, install the slotted pin to the select lever inner lever.
Drive in depth: 3.5 ± 0.5 mm (0.1378 – 0.0197 in.)

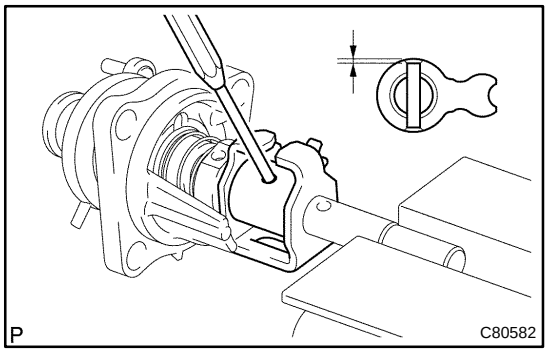

15. INSTALL SHIFT LEVER INNER NO.1

(a) Coat the shift interlock plate and shift lever inner No.1 with MP grease.

(b) Install the shift interlock plate with shift lever inner No.1 to the shift & select lever shaft.

(c) Using a pin punch (ϕ 5 mm) and a hammer, install the slotted pin to the shift lever inner No.1.
Drive in depth: 0 ± 0.5 mm (0 ± 0.0197 in.)

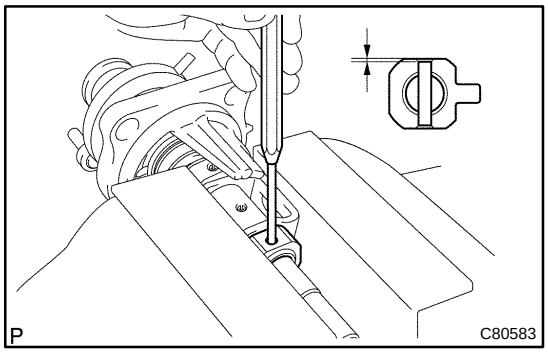

16. INSTALL SHIFT LEVER INNER NO.2

(a) Install the shift lever inner No.2 to the shift & select lever shaft.

(b) Using a pin punch (ϕ 5 mm) and a hammer, install the slotted pin to the shift lever inner No.2.
Drive in depth: 0 ± 0.5 mm (0 ± 0.0197 in.)

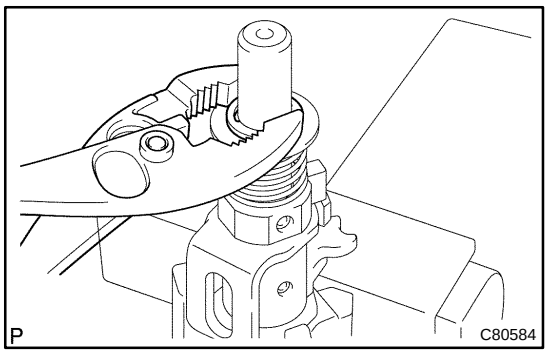

17. INSTALL SELECT SPRING SEAT NO.2

(a) Coat the select spring seat No.2 with MP grease, install it with select return spring to the shift & select lever shaft.

(b) Using a plier, install the E–ring to the shift & select lever shaft.

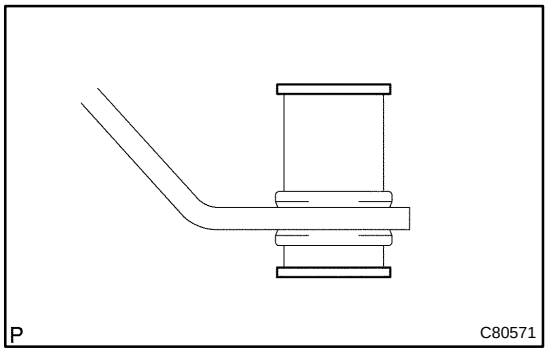

18. INSTALL SELECTING BELLCRANK NO.2 BUSH

(a) Coat the selecting bellcrank No.2 bushes with MP grease, install them to the selecting bellcrank.

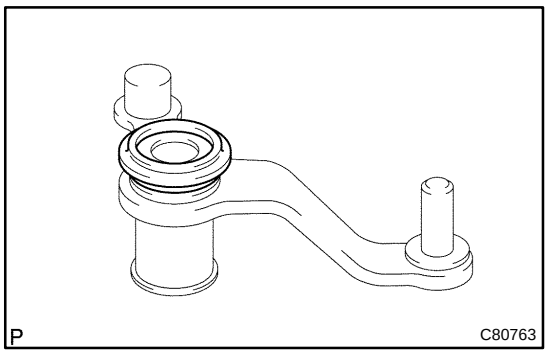

19. INSTALL SELECTING BELLCRANK DUST COVER NO.2

(a) Coat the selecting bellcrank dust cover No.2 with MP grease, install it to the selecting bellcrank No.2.

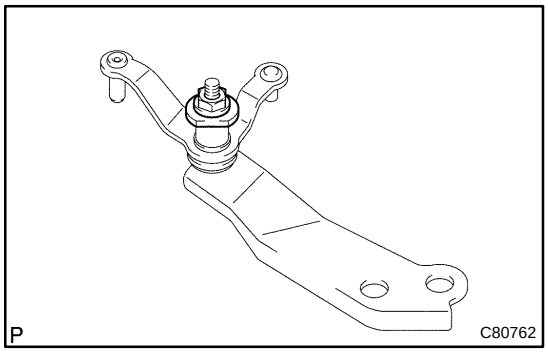

20. INSTALL SELECTING BELL CRANK NO.2

(a) Install the selecting bellcrank No.2, selecting bellcrank No.2 plate washer and spring washer with nut.
Torque: 11.8 N·m (120 kgf·cm, 9 ft·lbf)

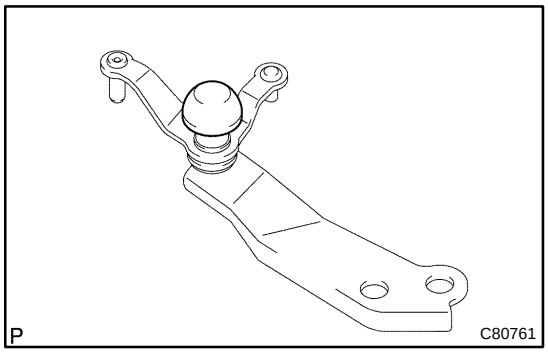

21. INSTALL SELECTING BELLCRANK DUST COVER NO.1

(a) Install the selecting bellcrank dust cover No.1 to the selecting bellcrank assy.

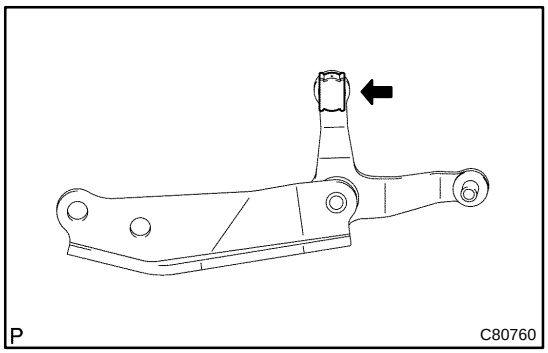

22. INSTALL CONTROL SHIFT LEVER BUSH

(a) Coat the control shift lever bush with MP grease, install it to the selecting bellcrank assy.

MANUAL TRANSAXLE SYSTEM (MTM)

4107P–01

PROBLEM SYMPTOMS TABLE

Use the table below to help you find the cause of the problem. The numbers indicate the priority of the likely cause of the problem. Check each part in order. If necessary, replace parts.

Symptom	Suspect Area	See page
Noise	6. Oil (Level low)	41–2
	7. Oil (Wrong)	41–2
	8. Gear (Worn or damaged) ¿C59:	41–102
		41–123
	¿C60:	41–113
		41–135
	9. Bearing (Worn or damaged) ¿C59:	41–102
		41–123
	¿C60:	41–113
		41–135
Oil leakage	1. Oil (Level too high)	41–2
	2. Gasket (Damaged) ¿C59:	41–29
	¿ C60:	41–66
	3. Oil seal (Worn or damaged)	41–3
	4. O–Ring (Worn or damaged) C59:	41–29
	¿ C60:	41–66
Hard to shift or will not shift	1. Control cable (Faulty)	41–9
		41–12
	2. Synchronizer ring (Worn or damaged) ¿C59:	41–102
		41–123
	¿ C60:	41–113
		41–135
	3. Shifting key spring (Damaged) ¿C59:	41–102
		41–123
	¿C60:	41–113
		41–135
Jumps out of gear	1. Locking ball spring (Damaged) ¿C59:	41–29
	¿ C60:	41–66
	2. Gear Shift fork (Worn) ¿C59:	41–29
	¿ C60:	41–66
	3. Gear (Worn or damaged) C59:	41–102
		41–123
	¿ ¿C60:	41–113
		41–135
	4. Bearing (Worn or damaged) ¿ C59:	41–102
		41–123
	¿ C60:	41–113
		41–135

MANUAL TRANSAXLE OIL (MTM)

ON–VEHICLE INSPECTION

4107Q–01

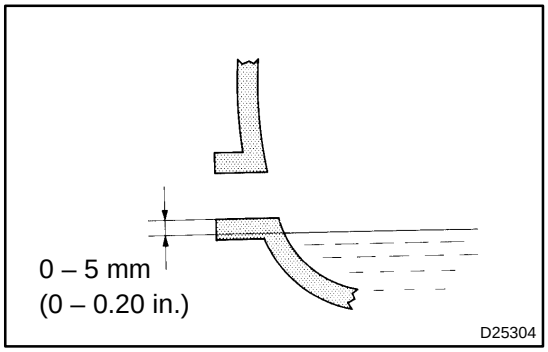

1. INSPECT TRANSAXLE OIL

(a) Stop the vehicle on the level place.

(b) Remove the transmission filler plug and gasket.

(c) Check that the oil surface is within 5 mm (0.20 in.) from the lowest position of the inner surface of the transmission filler plug opening.

NOTICE:

- **Excessively large or small amount of oil may cause troubles.**
- **After replacing oil, drive the vehicle and check the oil level.**

(d) Check for oil leakage when the oil level is low.

(e) Install the transmission filler plug and new gasket.
Torque: 39.2 N·m (400 kgf·cm, 29 ft·lbf)

MANUAL TRANSAXLE ASSY (MTM)

4107W–01

COMPONENTS

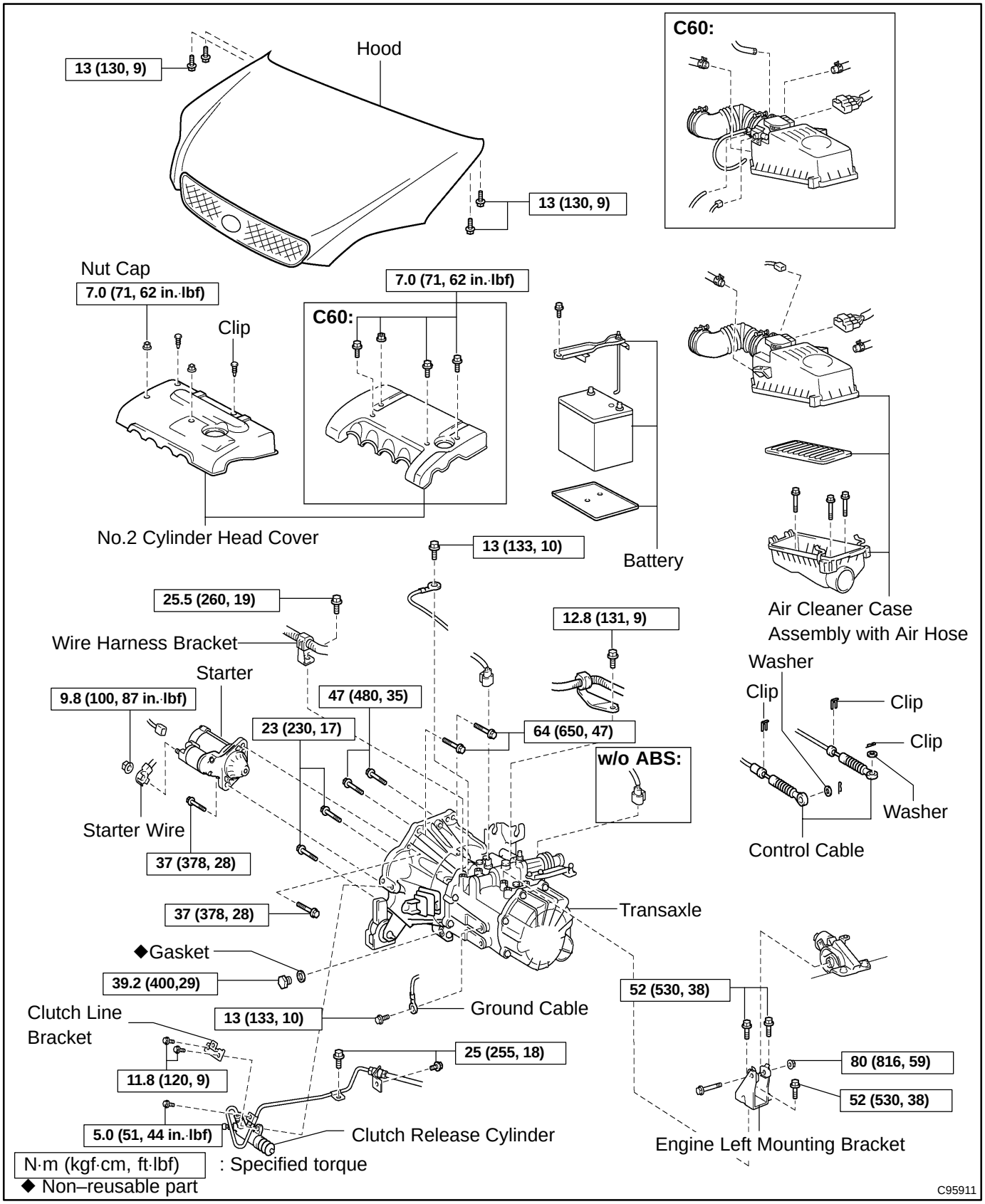

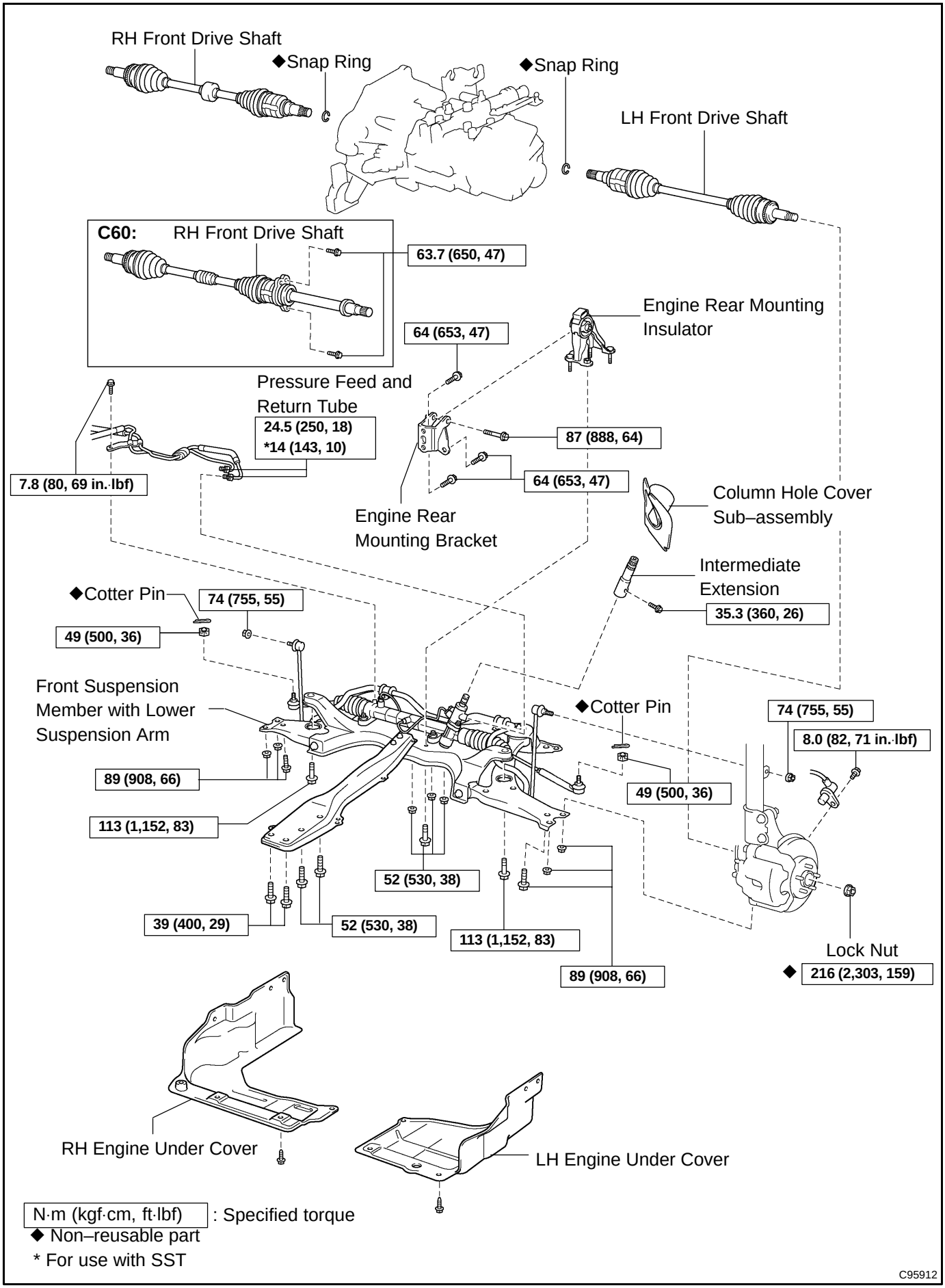
RH Front Drive Shaft
◆Snap Ring
◆Snap Ring
LH Front Drive Shaft
C60:
RH Front Drive Shaft
63.7 (650, 47)
Engine Rear Mounting Insulator
64 (653, 47)
Pressure Feed and Return Tube
24.5 (250, 18)
*14 (143, 10)
87 (888, 64)
7.8 (80, 69 in.·lbf)
64 (653, 47)
Column Hole Cover Sub–assembly
Engine Rear Mounting Bracket
Intermediate Extension
35.3 (360, 26)
◆Cotter Pin
74 (755, 55)
49 (500, 36)
Front Suspension Member with Lower Suspension Arm
◆Cotter Pin
74 (755, 55)
8.0 (82, 71 in.·lbf)
89 (908, 66)
49 (500, 36)
113 (1,152, 83)
52 (530, 38)
39 (400, 29)
52 (530, 38)
113 (1,152, 83)
89 (908, 66)
Lock Nut
◆ 216 (2,303, 159)
RH Engine Under Cover
LH Engine Under Cover
N·m (kgf·cm, ft·lbf) : Specified torque
◆ Non–reusable part
* For use with SST
C95912

4107X–01

REPLACEMENT

1. PLACE FRONT WHEELS FACING STRAIGHT AHEAD
2. SEPARATE STEERING INTERMEDIATE SHAFT (See page 51–22)
3. REMOVE FRONT WHEELS
4. REMOVE ENGINE UNDER COVER LH
5. REMOVE ENGINE UNDER COVER RH
6. REMOVE EXHAUST PIPE (See page 15–4 or 15–9)
7. DRAIN TRANSAXLE OIL
8. REMOVE HOOD SUB–ASSY
9. REMOVE CYLINDER HEAD COVER NO.2
(a) C59 T/M:
Remove the 2 nuts caps,clips and No.2 cylinderhead cover.
(b) C60 T/M:
Remove the 3 bolts,nut and No.2 cylinderhead cover.
10. REMOVE AIR CLEANER ASSY
11. REMOVE BATTERY CLAMP SUB–ASSY
12. REMOVE BATTERY
13. REMOVE BATTERY TRAY

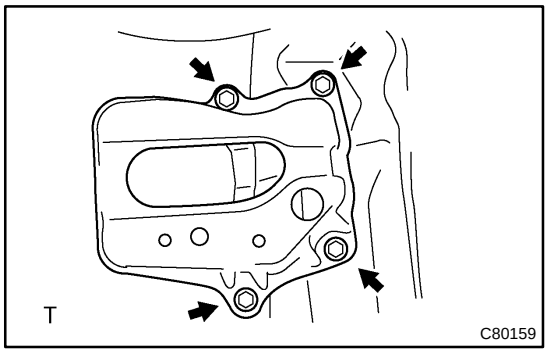

14. REMOVE BATTERY CARRIER
(a) Remove the 4 bolts and battery carrier.

15. REMOVE CRUISE CONTROL ACTUATOR ASSY (W/ CRUISE CONTROL) (See page 82–5)

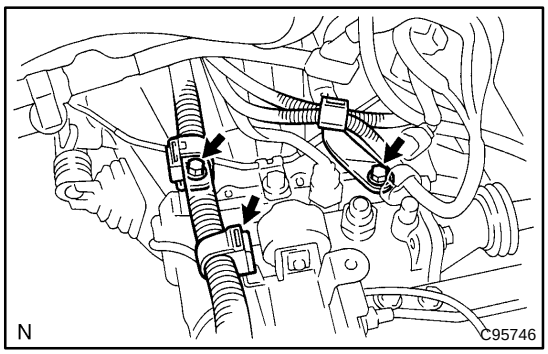

16. DISCONNECT WIRE HARNESS
(a) Disconnect the wire harness clamp.
(b) Remove the 2 bolts and disconnect the 2 wire harness brackets.

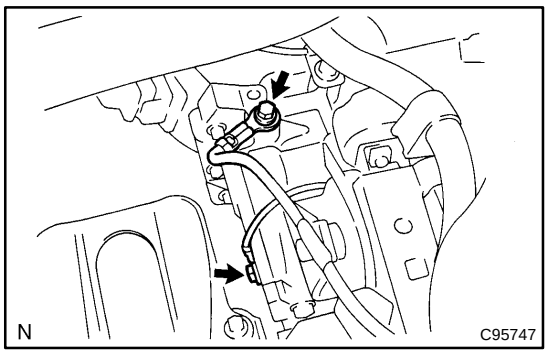

(c) Remove the 2 bolts and 2 ground cables.

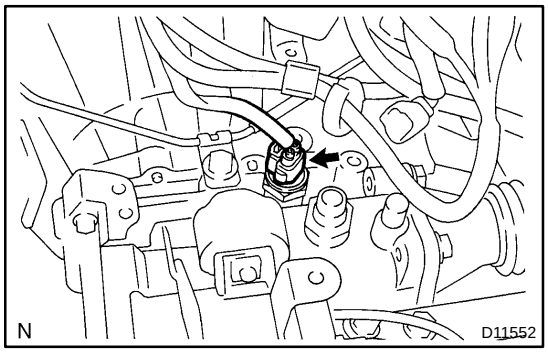

17. DISCONNECT CONNECTOR

(a) Disconnect the back–up lamp switch connector.

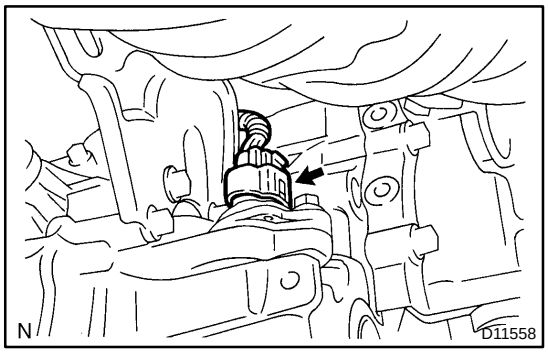

(b) w/o ABS:
Disconnect the speed sensor connector.

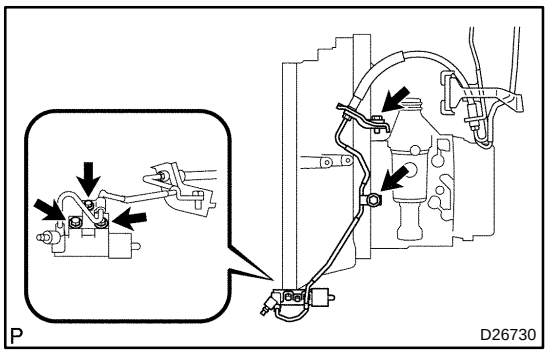

18. SEPARATE CLUTCH RELEASE CYLINDER ASSY

(a) Remove the 5 bolts, separate the release cylinder assy with clutch piping from the transaxle.

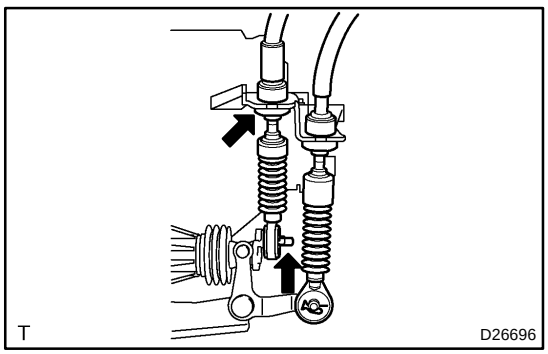

19. SEPARATE FLOOR SHIFT CABLE TRANSMISSION CONTROL SHIFT

(a) Remove the clip, washer and disconnect the shift cable from the transaxle.

(b) Remove the clip and disconnect the shift cable from the bracket.

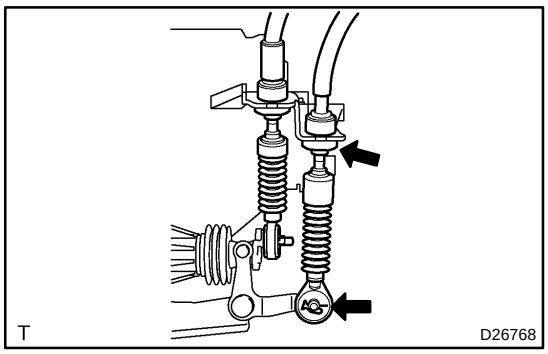

20. SEPARATE FLOOR SHIFT CABLE TRANSMISSION CONTROL SELECT

(a) Remove the clip, washer and disconnect the select cable from the transaxle.

(b) Remove the clip and disconnect the select cable from the bracket.

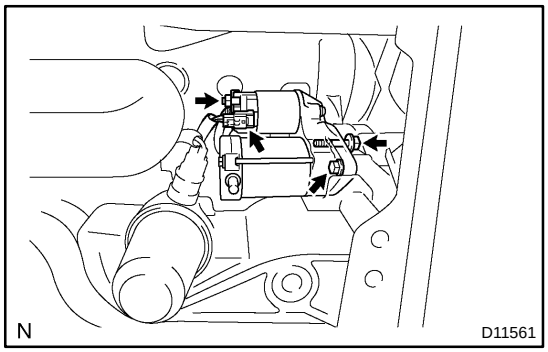

21. REMOVE STARTER ASSY

(a) Remove the nut and disconnect the starter wire.

(b) Disconnect the connector.

(c) Remove the 2 bolts and starter assy.

22. DISCONNECT TIE ROD END SUB–ASSY LH (See page 51–22)
SST 09628–62011

23. DISCONNECT TIE ROD END SUB–ASSY RH (See page 51–22)
SST 09628–62011

24. DISCONNECT PRESSURE FEED TUBE ASSY (See page 51–22)
SST 09023–38400

25. DISCONNECT RETURN TUBE SUB–ASSY (See page 51–22)
SST 09023–38400

26. REMOVE FRONT DRIVE SHAFT ASSY LH (See page 30–15 or 30–32)
SST 09520–01010, 09520–24010 (09520–32040)

27. REMOVE FRONT DRIVE SHAFT ASSY RH (See page 30–15 or 30–32)
SST 09520–01010, 09520–24010 (09520–32040)

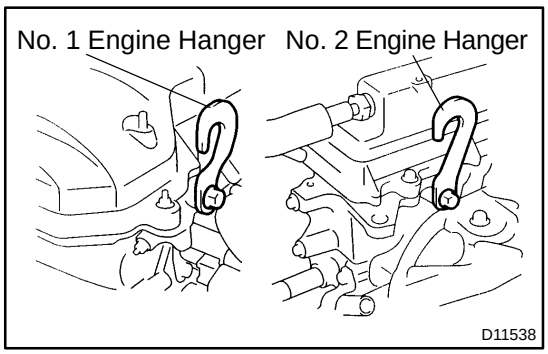

28. SUSPEND ENGINE ASSY

(a) Remove the 2 PCV hoses.

(b) C59 T/M:
Install the No.1 and No.2 engine hangers in the correct direction.
Parts No.:
No.1 engine hanger: 12281–22021
No.2 engine hanger: 12281–15040
Bolt: 91512–B1016
Torque: 38 N·m (387 kgf·cm,28 ft·lbf)

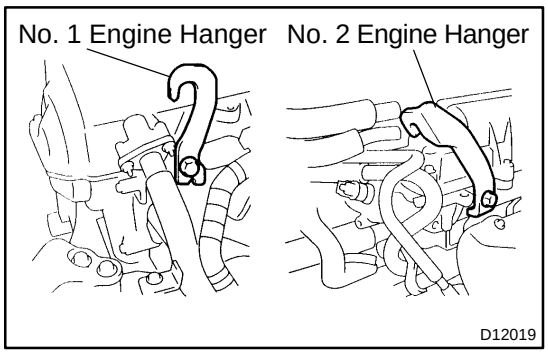

(c) C60 T/M:
Install the No.1 and No.2 engine hangers in the correct direction.
Parts No.:
No.1 engine hanger: 12281–88600
No.2 engine hanger: 12282–88600
Bolt: 91512–61020
Torque: 38 N·m (387 kgf·cm,28 ft·lbf)

(d) Attach the engine chain hoist to the hangers.

CAUTION:
Do not attempt to hang the engine by hooking the chain to any other part.

29. REMOVE FRONT SUSPENSION CROSSMEMBER SUB–ASSY (See page 26–15)

30. SUPPORT MANUAL TRANSAXLE ASSY

(a) Support the transaxle with a transmission jack.

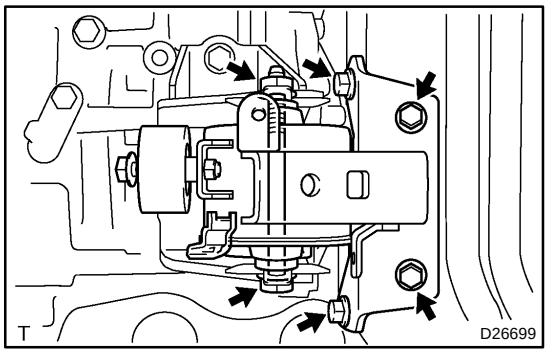

31. REMOVE TRANSVERSE ENGINE ENGINE MOUNTING INSULATOR

(a) Remove the 5 bolts, nut and engine mounting insulator LH from the body.

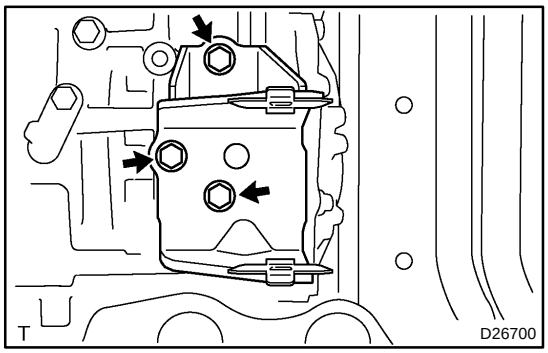

32. REMOVE TRANSVERSE ENGINE ENGINE MOUNTING BRACKET

(a) Remove the 3 bolts and engine mounting bracket LH from the transaxle.

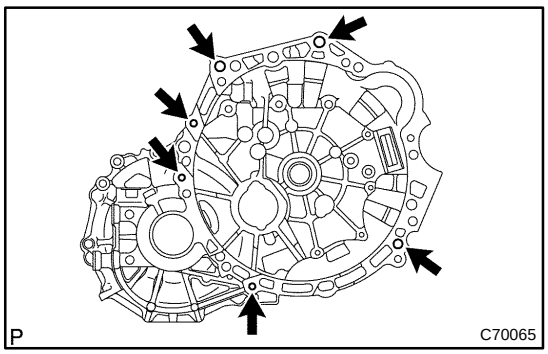

33. REMOVE MANUAL TRANSAXLE ASSY

(a) Remove the 6 bolts and transaxle from the engine.

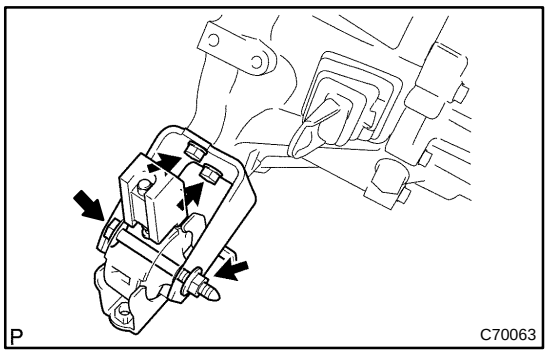

34. REMOVE TRANSVERSE ENGINE ENGINE MOUNTING BRACKET

(a) Remove the bolt, nut and engine mounting insulator FR from the engine mounting bracket FR.

(b) Remove the 2 bolts and engine mounting bracket FR from the transaxle.

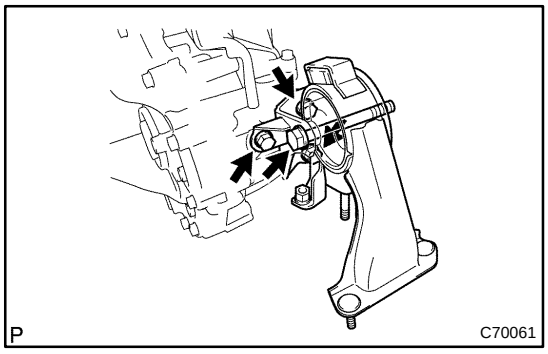

35. REMOVE TRANSVERSE ENGINE ENGINE MOUNTING BRACKET

(a) Remove the bolt and engine mounting insulator RR from the engine mounting bracket RR.

(b) Remove the 3 bolts and engine mounting bracket RR from the transaxle.

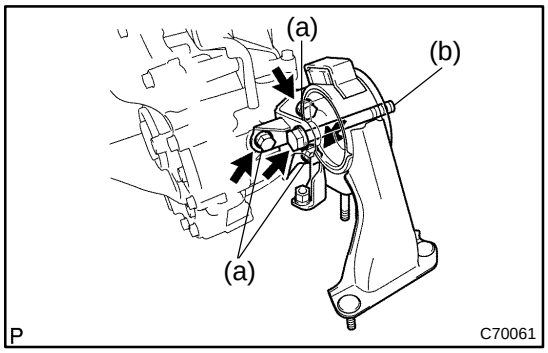

36. INSTALL TRANSVERSE ENGINE ENGINE MOUNTING BRACKET

(a) Install the engine mounting bracket RR and 3 bolts to the transaxle.
Torque: 64 N·m (653 kgf·cm, 47 ft·lbf)

(b) Install the engine mounting insulator RR and bolt to the engine mounting bracket RR.
Torque: 87 N·m (888 kgf·cm, 64 ft·lbf)

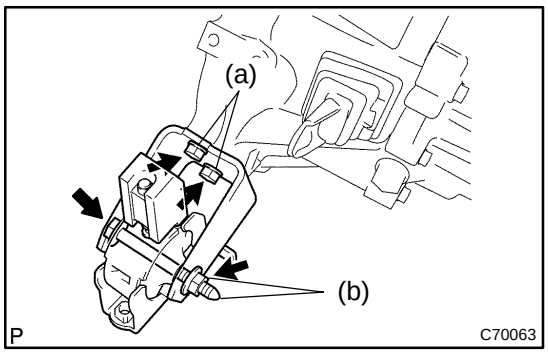

37. INSTALL TRANSVERSE ENGINE ENGINE MOUNTING BRACKET

(a) Install the engine mounting bracket FR and 2 bolts to the transaxle.
Torque: 64 N·m (653 kgf·cm, 47 ft·lbf)

(b) Install the engine mounting insulator FR, bolt and nut to the engine mounting bracket FR.
Torque: 52 N·m (530 kgf·cm, 38 ft·lbf)

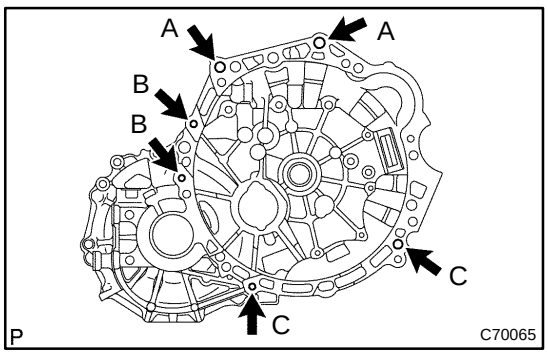

38. INSTALL MANUAL TRANSAXLE ASSY

(a) Align the input shaft with the clutch disc and install the transaxle to the engine.

(b) Install the 6 bolts.
Torque:
Bolt A: 64 N·m (650 kgf·cm, 47 ft·lbf)
Bolt B: 47 N·m (480 kgf·cm, 35 ft·lbf)
Bolt C: 23 N·m (230 kgf·cm, 17 ft·lbf)

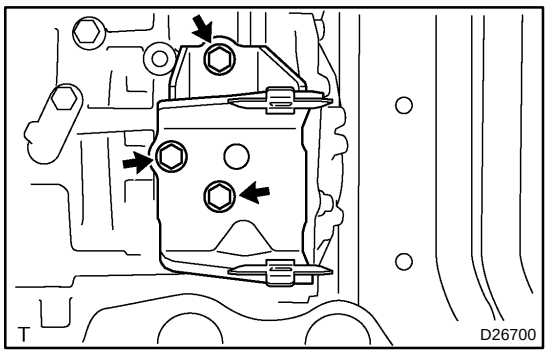

39. INSTALL TRANSVERSE ENGINE ENGINE MOUNTING BRACKET

(a) Install the engine mounting bracket LH to the transaxle with the 3 bolts.
Torque: 52 N·m (530 kgf·cm, 38 ft·lbf)

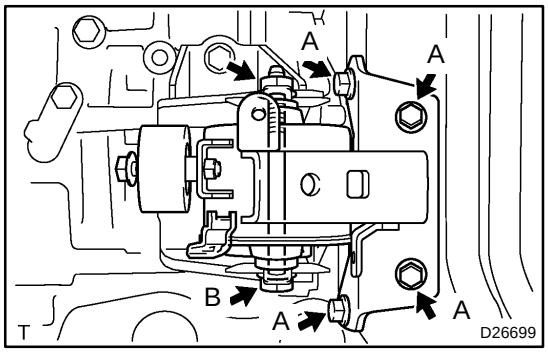

40. INSTALL TRANSVERSE ENGINE ENGINE MOUNTING INSULATOR

(a) Install the engine mounting insulator LH with the 5 bolts and nut.
Torque:
Bolt A: 52 N·m (530 kgf·cm, 38 ft·lbf)
Bolt B: 80 N·m (816 kgf·cm, 59 ft·lbf)

41. INSTALL FRONT SUSPENSION CROSSMEMBER SUB–ASSY (See page 26–15)
SST 09670–00010

42. INSTALL FRONT DRIVE SHAFT ASSY LH (See page 30–15 or 30–32)

43. INSTALL FRONT DRIVE SHAFT ASSY RH (See page 30–15 or 30–32)

44. CONNECT RETURN TUBE SUB–ASSY (See page 51–22)
SST 09023–38400

45. CONNECT PRESSURE FEED TUBE ASSY (See page 51–22)
SST 09023–38400

46. CONNECT TIE ROD END SUB–ASSY LH (See page 51–22)

47. CONNECT TIE ROD END SUB–ASSY RH (See page 51–22)

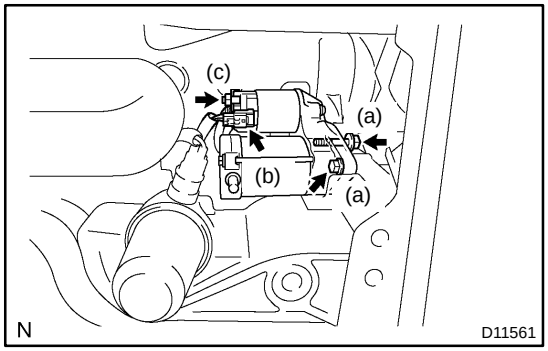

48. INSTALL STARTER ASSY

(a) Install the starter assy and 2 bolts to the transaxle.
Torque: 37 N·m (378 kgf·cm, 27 ft·lbf)

(b) Connect the starter connector.

(c) Install the wire and nut to starter assy.
Torque: 9.8 N·m (100 kgf·cm, 87 ft·lbf)

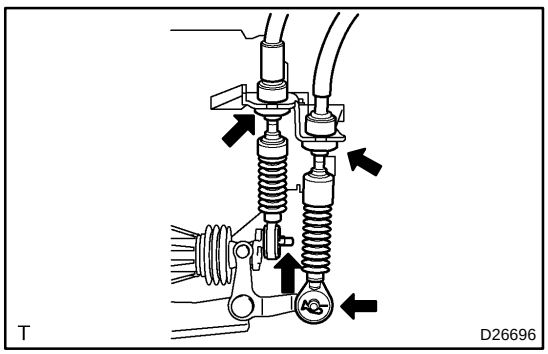

49. CONNECT FLOOR SHIFT CABLE TRANSMISSION CONTROL SHIFT

(a) Connect the shift cable end, and install the washer and clip.

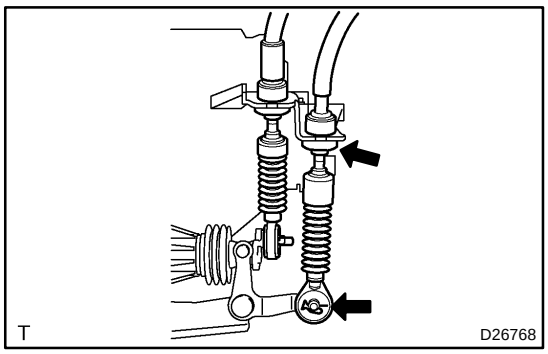

50. FLOOR SHIFT CABLE TRANSMISSION CONTROL SELECT

(a) Connect the select cable end, and install the washer and clip.

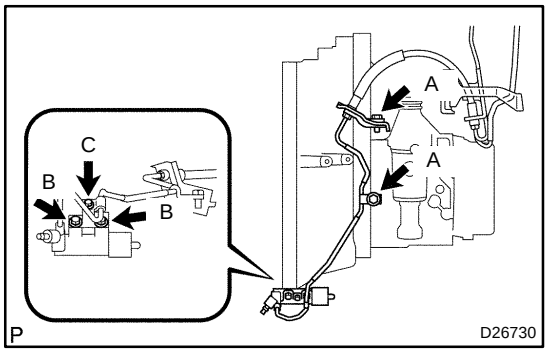

51. CONNECT CLUTCH RELEASE CYLINDER ASSY

(a) Install the release cylinder with the 5 bolts.

Torque:
Bolt A: 25 N·m (250 kgf·cm, 19 ft·lbf)
Bolt B: 12 N·m (120 kgf·cm, 9 ft·lbf)
Bolt C: 5.0 N·m (51 kgf·cm, 44 ft·lbf)

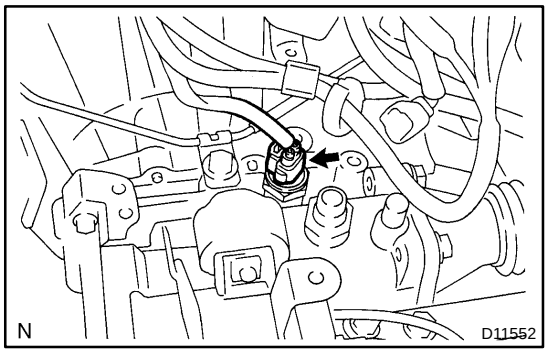

52. CONNECT CONNECTOR

(a) Connect the back–up lamp switch connector.

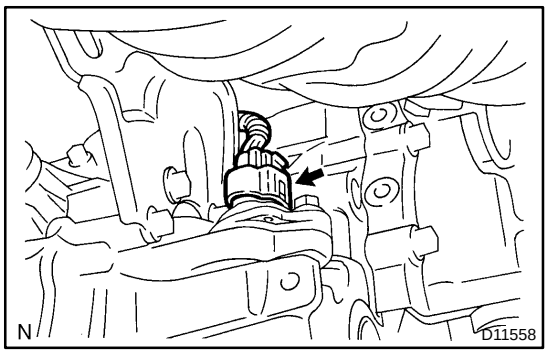

(b) w/o ABS:
Connect the speed sensor connector.

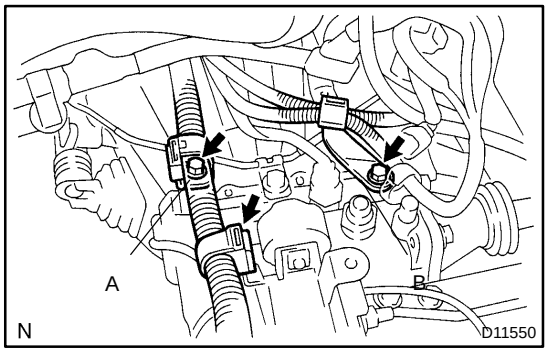

53. CONNECT WIRE HARNESS

(a) Install the 2 wire harness clamps to the transaxle with the 2 bolts.

Torque:
Bolt A: 25.5 N·m (260 kgf·cm, 19 ft·lbf)
Bolt B: 12.8 N·m (131 kgf·cm, 9 ft·lbf)

(1) Connect the wire harness clamp.

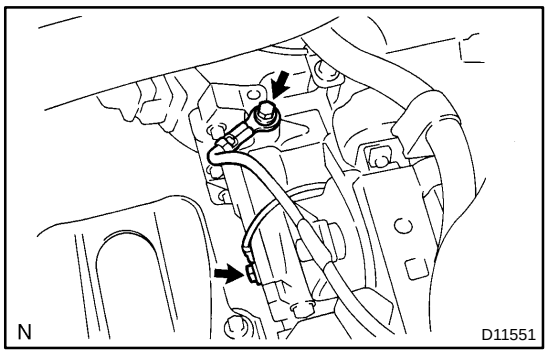

(b) Install the 2 bolts and 2 ground cables.
Torque: 13 N·m (133 kgf·cm, 10 ft·lbf)

54. INSTALL CRUISE CONTROL ACTUATOR ASSY (W/ CRUISE CONTROL) (See page 82–5)

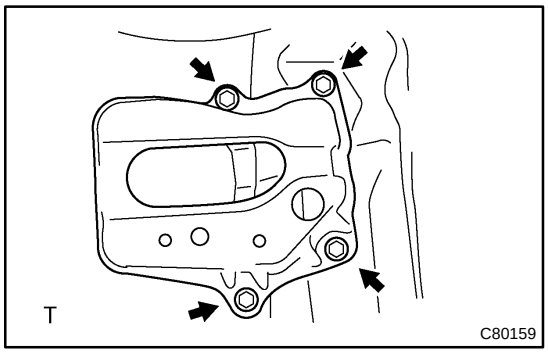

55. INSTALL BATTERY CARRIER
(a) Install the battery carrier and 4 bolts.
Torque: 13 N·m (133 kgf·cm, 10 ft·lbf)

56. INSTALL BATTERY TRAY
57. INSTALL BATTERY
58. INSTALL BATTERY CLAMP SUB–ASSY
Torque:
Bolt: 5.0 N·m (51 kgf·cm, 44 in.·lbf)
Nut: 3.5 N·m (36 kgf·cm, 31 in.·lbf)
59. INSTALL AIR CLEANER ASSY
Torque: 7.0 N·m (71 kgf·cm, 62 in.·lbf)
60. INSTALL CYLINDER HEAD COVER NO.2
Torque: 7.0 N·m (71 kgf·cm, 62 in.·lbf)
61. INSTALL HOOD SUB–ASSY
Torque: 13 N·m (133 kgf·cm, 10 ft·lbf)
62. INSPECT HOOD SUB–ASSY
63. ADJUST HOOD SUB–ASSY (See page 75–1)
64. ADD TRANSAXLE OIL (See page 41–2)
65. INSPECT TRANSAXLE OIL (See page 41–2)
66. INSTALL FRONT WHEELS
Torque: 103 N·m (1,050 kgf·cm, 76 ft·lbf)
67. INSTALL STEERING COLUMN HOLE COVER SUB–ASSY NO.1
68. CONNECT STEERING INTERMEDIATE SHAFT (See page 51–22)
69. PLACE FRONT WHEELS FACING STRAIGHT AHEAD
70. CENTER SPIRAL CABLE (See page 60–22)
71. STEERING WHEEL CENTER POINT (See page 50–8)
72. INSTALL EXHAUST PIPE (See page 15–4 or 15–9)
73. INSTALL ENGINE UNDER COVER LH

74. INSTALL ENGINE UNDER COVER RH

75. INSPECT FRONT WHEEL ALIGNMENT (See page 26–6)

76. CHECK ABS SPEED SENSOR SIGNAL (See page 05–316)

FRONT DIFFERENTIAL OIL SEAL (MTM)

4107R–01

REPLACEMENT

HINT:

COMPONENTS: See page 41–26 or 41–63

1. **DRAIN MANUAL TRANSAXLE OIL**
2. **REMOVE FRONT WHEELS**
3. **REMOVE ENGINE UNDER COVER LH**
4. **REMOVE ENGINE UNDER COVER RH**
5. **REMOVE FRONT DRIVE SHAFT ASSY LH (See page 30–15 or 30–32)**
   SST 09520–01010, 09520–24010 (09520–32040)
6. **REMOVE FRONT DRIVE SHAFT ASSY RH (See page 30–15 or 30–32)**
   SST 09520–01010, 09520–24010 (09520–32040)

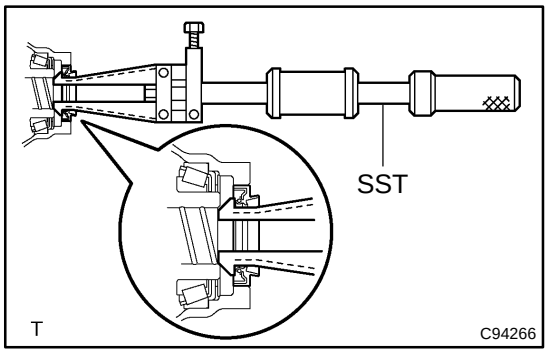

7. **REMOVE FRONT TRANSAXLE CASE OIL SEAL**
(a) Using SST, remove the oil seal.
SST 09308–00010

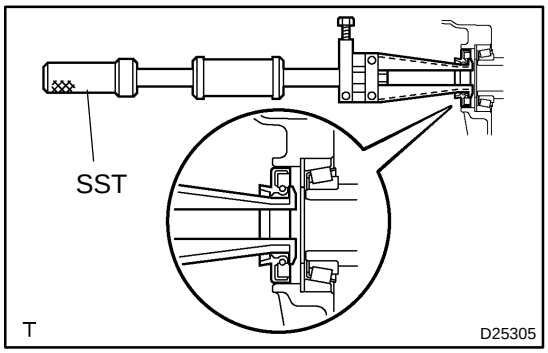

8. **REMOVE TRANSMISSION CASE OIL SEAL**
(a) Using SST, remove the oil seal.
SST 09308–00010

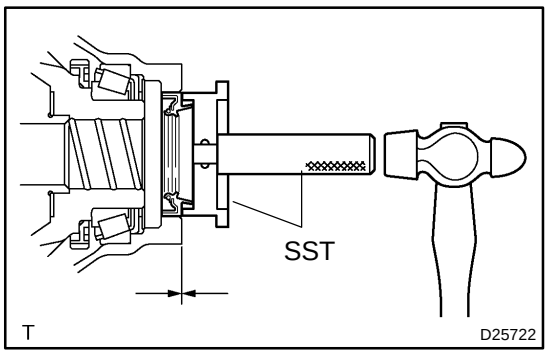

9. **INSTALL FRONT TRANSAXLE CASE OIL SEAL**
(a) Coat a new oil seal lip with MP grease.
(b) Using SST and a hammer, install the oil seal.
SST 09554–14010, 09950–70010 (09951–07200)
Drive in depth: 1.9 ± 0.3 mm (0.075 ± 0.012 in.)

NOTICE:
Be careful not to damage the oil seal lip.

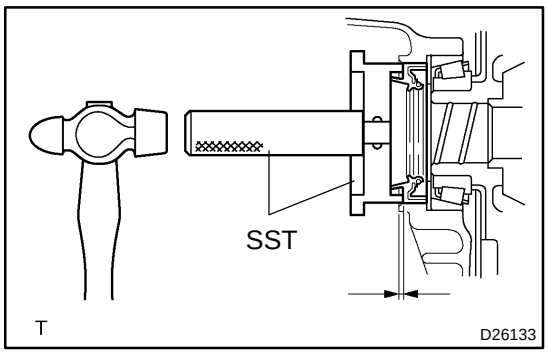

10. INSTALL TRANSMISSION CASE OIL SEAL

(a) Coat a new oil seal lip with MP grease.

(b) Using SST and a hammer, install the oil seal.

SST 09554–14010, 09950–70010 (09951–07200)

Drive in depth: 9.9 ± 0.3 mm (0.390 ± 0.012 in.)

NOTICE:

Be careful not to damage the oil seal lip.

11. INSTALL FRONT DRIVE SHAFT ASSY LH (See page 30–15 or 30–32)

12. INSTALL FRONT DRIVE SHAFT ASSY RH (See page 30–15 or 30–32)

13. INSTALL FRONT WHEELS

Torque: 103 N·m (1,050 kgf·cm, 76 ft·lbf)

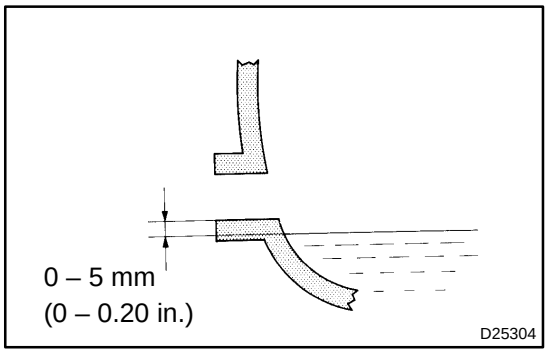

14. ADD MANUAL TRANSAXLE OIL

Oil grade: API GL–4 or GL–5

Viscosity: SAE 75 W–90

Capacity:

C59 T/M: 1.9 liters (2.0 US qts, 1.7 lmp. qts)

C60 T/M: 2.3 liters (2.4 US qts, 2.0 lmp. qts)

Torque: 39.2 N·m (400 kgf·cm, 29 ft·lbf)

15. INSPECT AND ADJUST MANUAL TRANSAXLE OIL (See page 41–2)

16. CHECK ABS SPEED SENSOR SIGNAL (See page 05–316)

MANUAL TRANSAXLE ASSY (C60)

41080–01

COMPONENTS

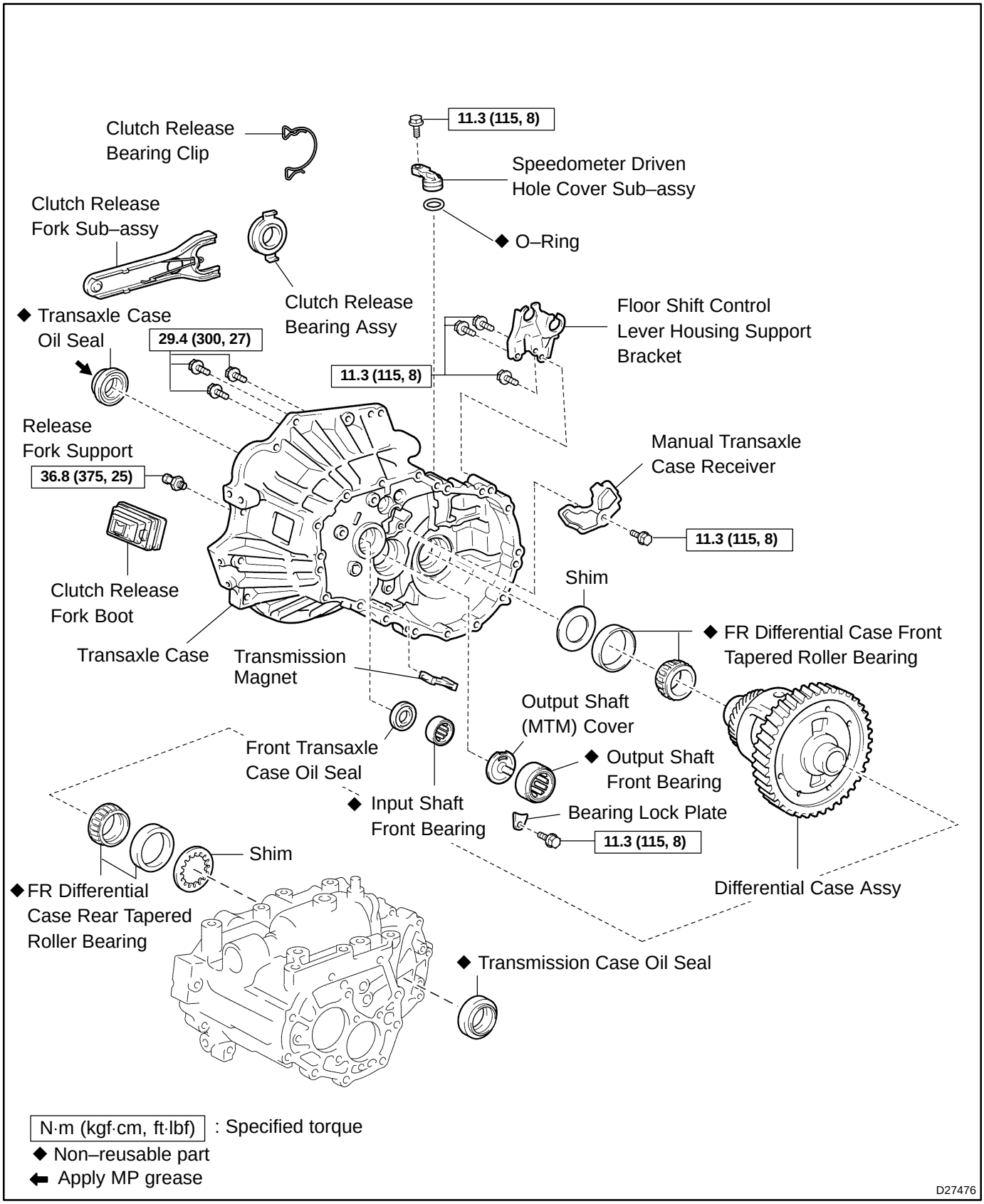

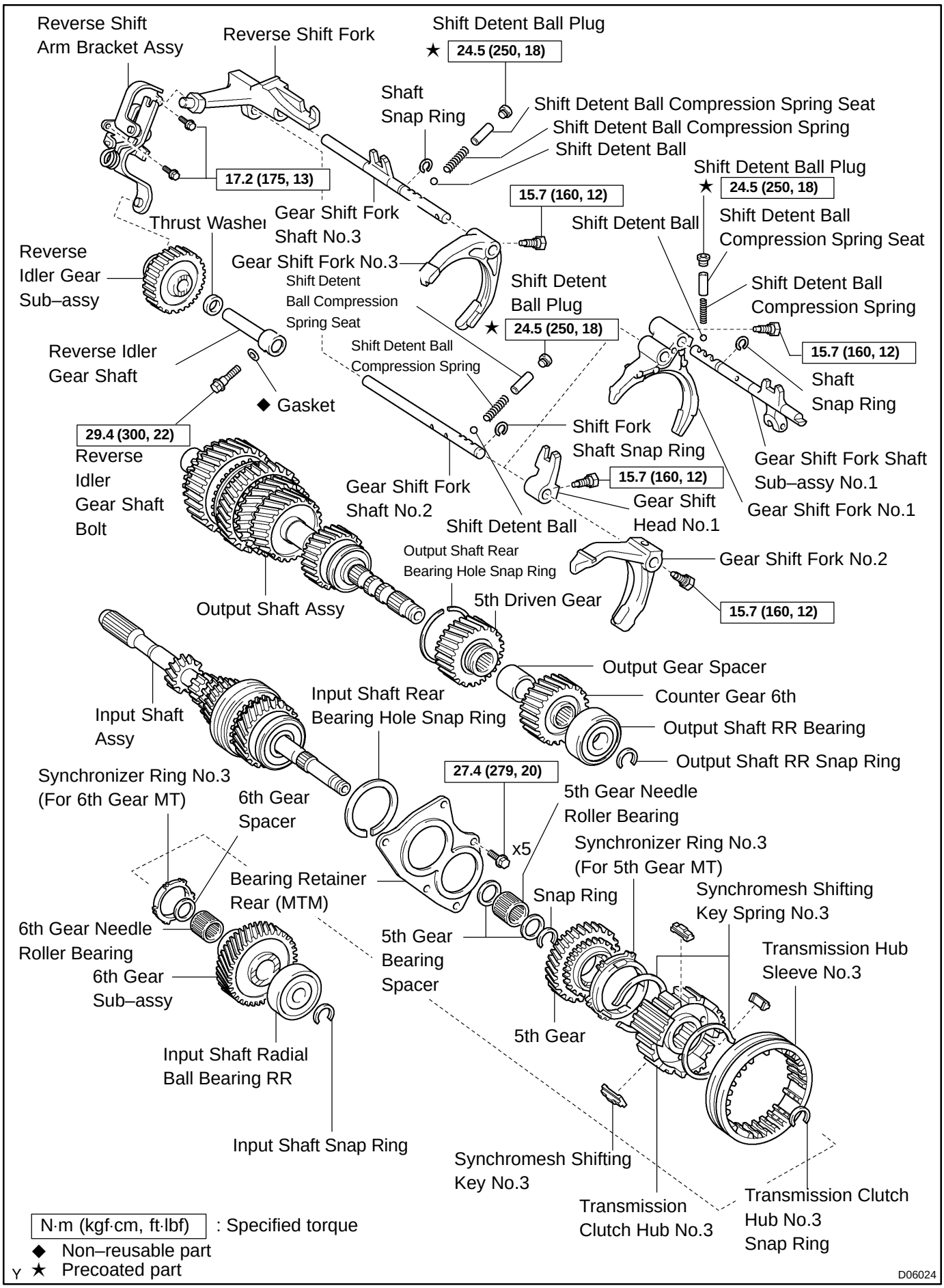
Reverse Shift Arm Bracket Assy
Reverse Shift Fork
Shift Detent Ball Plug
★ 24.5 (250, 18)
Shift Snap Ring
Shift Detent Ball Compression Spring Seat
Shift Detent Ball Compression Spring
Shift Detent Ball
17.2 (175, 13)
Gear Shift Fork Shaft No.3
15.7 (160, 12)
Shift Detent Ball Plug
★ 24.5 (250, 18)
Thrust Washer
Shift Detent Ball
Shift Detent Ball Compression Spring Seat
Reverse Idler Gear Sub–assy
Gear Shift Fork No.3
Shift Detent Ball Compression Spring Seat
Shift Detent Ball Plug
★ 24.5 (250, 18)
Shift Detent Ball Compression Spring
Reverse Idler Gear Shaft
Shift Detent Ball Compression Spring
15.7 (160, 12)
Shaft Snap Ring
◆ Gasket
29.4 (300, 22)
Reverse Idler Gear Shaft Bolt
Shift Fork Shaft Snap Ring
Gear Shift Fork Shaft Sub–assy No.1
15.7 (160, 12)
Gear Shift Head No.1
Gear Shift Fork Shaft No.2
Shift Detent Ball
Gear Shift Fork No.1
Output Shaft Rear Bearing Hole Snap Ring
Gear Shift Fork No.2
Output Shaft Assy
5th Driven Gear
15.7 (160, 12)
Output Gear Spacer
Input Shaft Assy
Input Shaft Rear Bearing Hole Snap Ring
Counter Gear 6th
Output Shaft RR Bearing
Output Shaft RR Snap Ring
Synchronizer Ring No.3 (For 6th Gear MT)
27.4 (279, 20)
6th Gear Spacer
5th Gear Needle Roller Bearing
x5
Synchronizer Ring No.3 (For 5th Gear MT)
Bearing Retainer Rear (MTM)
Snap Ring
Synchromesh Shifting Key Spring No.3
6th Gear Needle Roller Bearing
5th Gear Bearing Spacer
Transmission Hub Sleeve No.3
6th Gear Sub–assy
5th Gear
Input Shaft Radial Ball Bearing RR
Input Shaft Snap Ring
Synchromesh Shifting Key No.3
Transmission Clutch Hub No.3
Transmission Clutch Hub No.3 Snap Ring
N·m (kgf·cm, ft·lbf) : Specified torque
◆ Non–reusable part
★ Precoated part
D06024

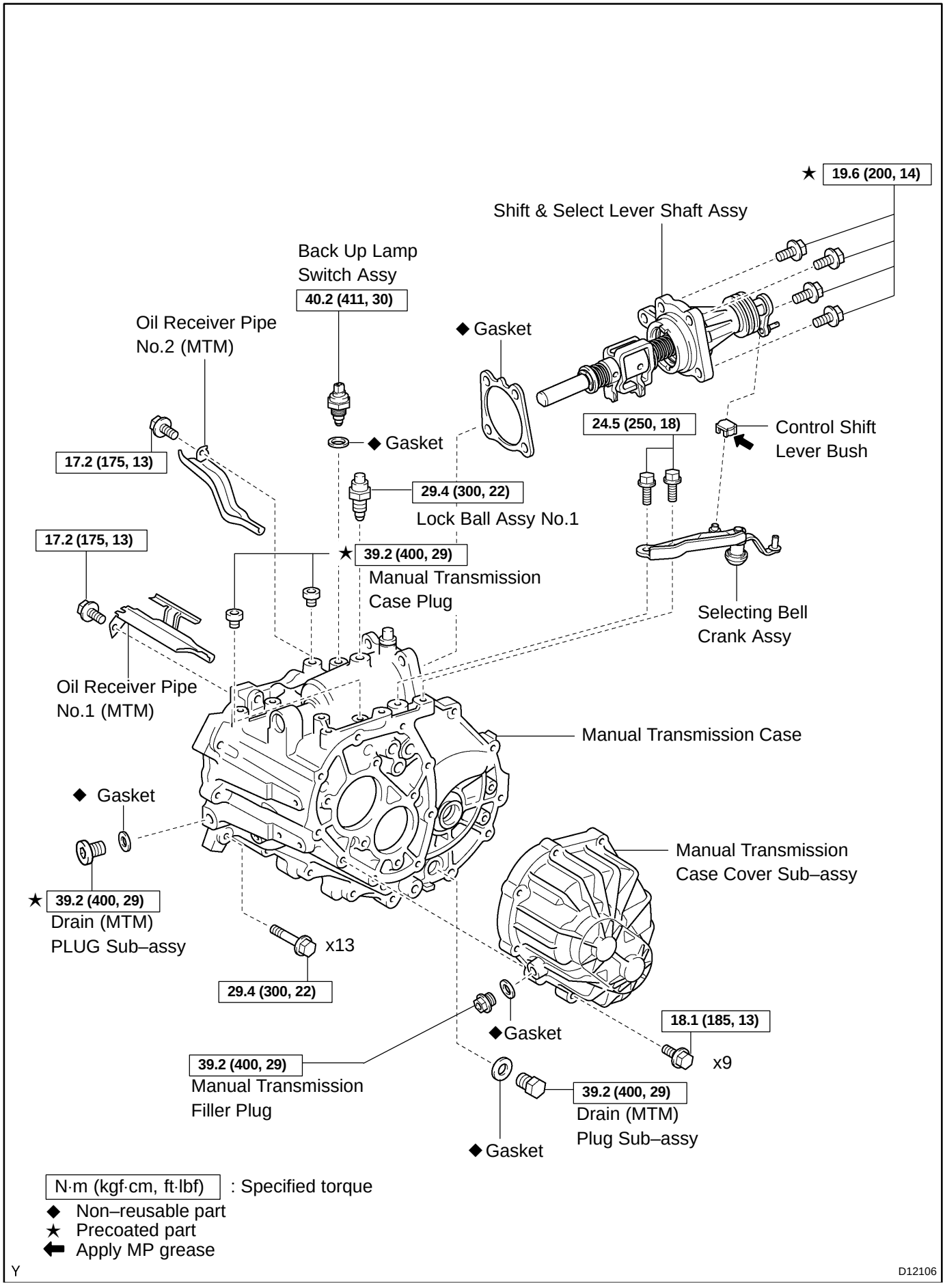
★ 19.6 (200, 14)
Shift & Select Lever Shaft Assy
Back Up Lamp Switch Assy
40.2 (411, 30)
Oil Receiver Pipe No.2 (MTM)
◆ Gasket
◆ Gasket
24.5 (250, 18)
Control Shift Lever Bush
17.2 (175, 13)
29.4 (300, 22)
Lock Ball Assy No.1
17.2 (175, 13)
★ 39.2 (400, 29)
Manual Transmission Case Plug
Selecting Bell Crank Assy
Oil Receiver Pipe No.1 (MTM)
Manual Transmission Case
◆ Gasket
Manual Transmission Case Cover Sub–assy
★ 39.2 (400, 29)
Drain (MTM) PLUG Sub–assy
x13
29.4 (300, 22)
◆Gasket
18.1 (185, 13)
x9
39.2 (400, 29)
Manual Transmission Filler Plug
39.2 (400, 29)
Drain (MTM) Plug Sub–assy
◆ Gasket
N·m (kgf·cm, ft·lbf) : Specified torque
◆ Non–reusable part
★ Precoated part
Apply MP grease
Y
D12106

41081–01

OVERHAUL

1. REMOVE SPEEDOMETER DRIVEN HOLE COVER SUB–ASSY

(a) Remove the bolt and speedometer driven hole cover sub–assy.

(b) Remove the O–ring from the speedometer driven hole cover sub–assy.

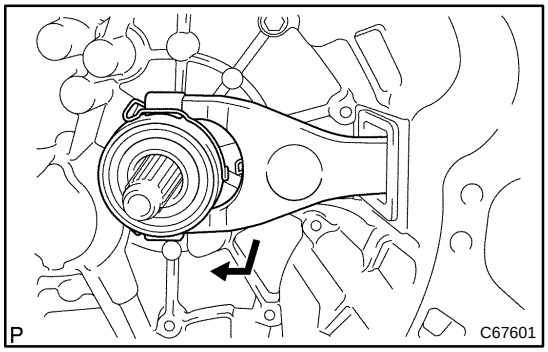

2. REMOVE CLUTCH RELEASE FORK SUB–ASSY

(a) Remove the clutch release fork sub–assy with clutch release bearing assy from the transaxle case.

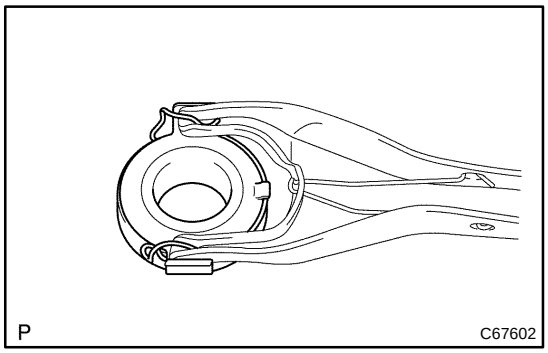

3. REMOVE CLUTCH RELEASE BEARING ASSY

(a) Remove the clutch release bearing hub clip and clutch release bearing assy from the clutch release fork sub–assy.

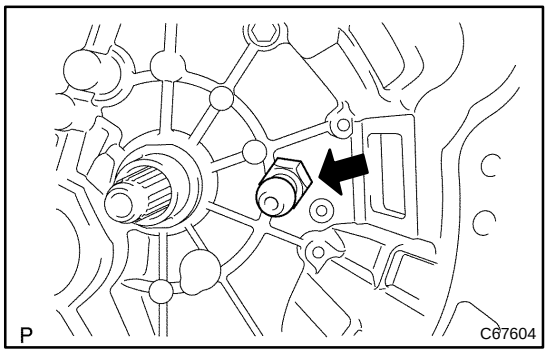

4. REMOVE RELEASE FORK SUPPORT

(a) Remove release fork support from the transaxle case.

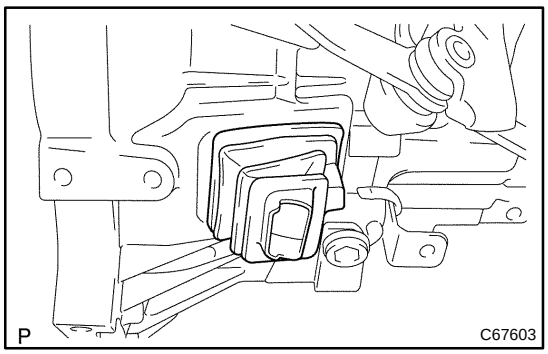

5. REMOVE CLUTCH RELEASE FORK BOOT

(a) Remove the clutch release fork boot from the transaxle case.

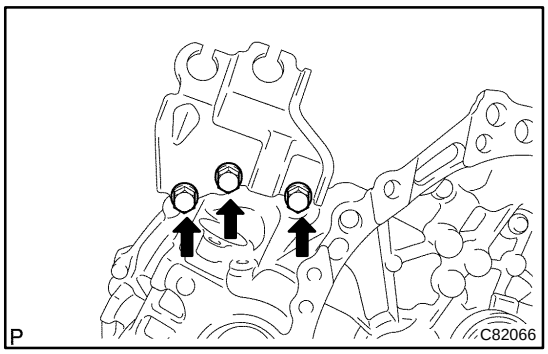

6. REMOVE FLOOR SHIFT CONTROL LEVER HOUSING SUPPORT BRACKET

(a) Remove the 3 bolts and floor shift control lever housing support bracket from the transaxle case.

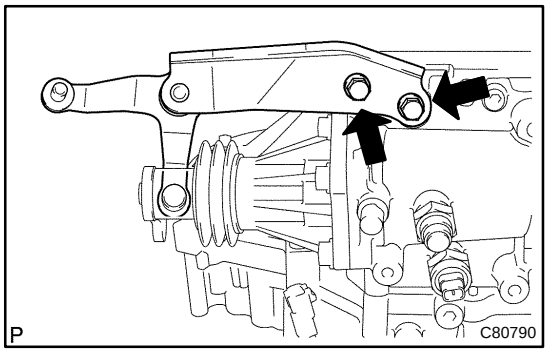

7. REMOVE SELECTING BELL CRANK ASSY

(a) Remove the 2 bolts and selecting bellcrank assy from the manual transmission case.

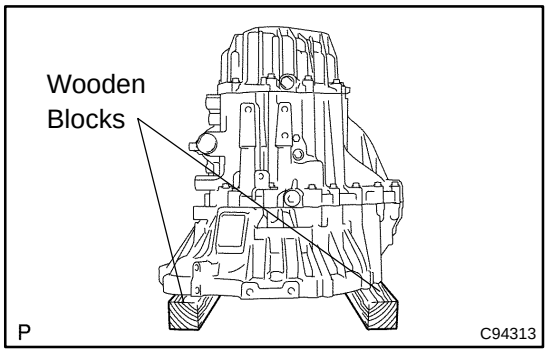

8. FIX MANUAL TRANSAXLE ASSY

(a) Using wooden blocks, fix the manual transaxle assy.

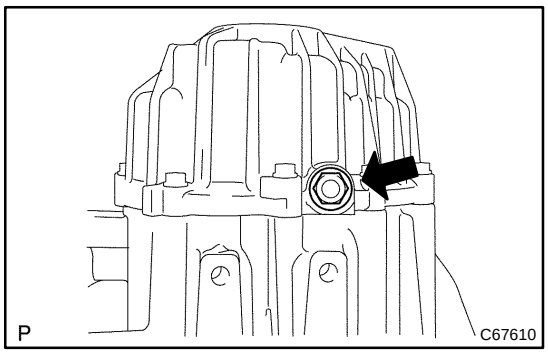

9. REMOVE MANUAL TRANSMISSION FILLER PLUG

(a) Remove the manual transmission filler plug and gasket from the manual transmission case cover.

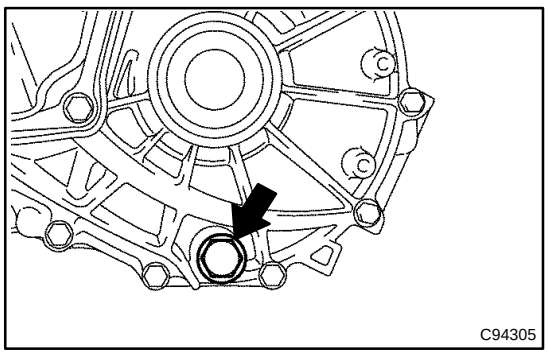

10. REMOVE DRAIN (MTM) PLUG SUB–ASSY

(a) Remove the drain (MTM) plug sub–assy and gasket from the manual transmission case.

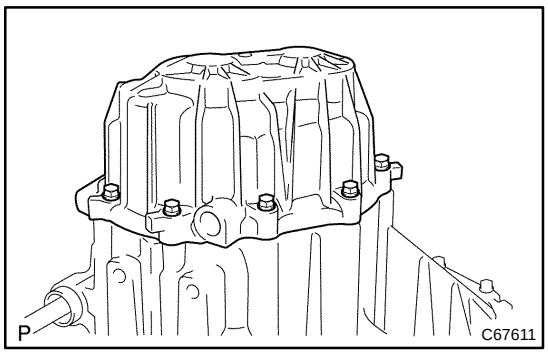

11. REMOVE MANUAL TRANSMISSION CASE COVER SUB–ASSY

(a) Remove the 9 bolts.

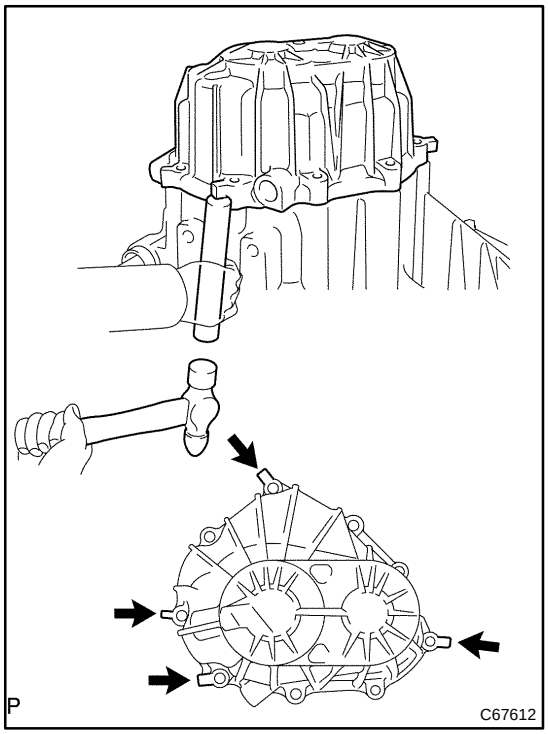

(b) Using a brass bar and a hammer, remove the manual transmission case cover sub–assy.

NOTICE:

Do not damage the manual transmission case cover sub–assy.

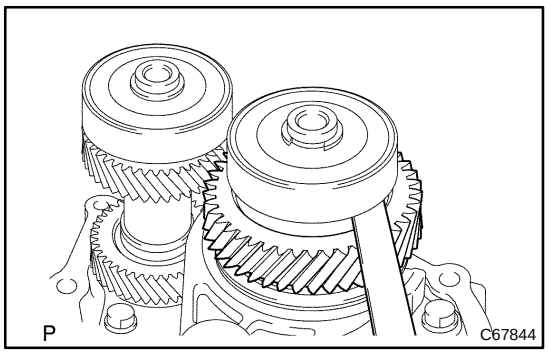

12. INSPECT 6TH GEAR THRUST CLEARANCE

(a) Using a feeler gauge, measure the 6th gear thrust clearance.

Standard clearance:

0.10 – 0.60 mm (0.0039 – 0.0236 in.)

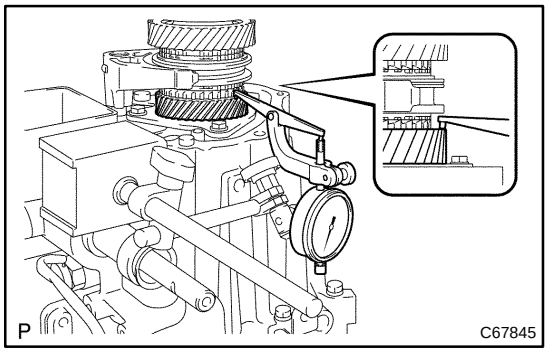

13. INSPECT 5TH GEAR THRUST CLEARANCE

(a) Using a dial indicator, measure the 5th gear thrust clearance.

Standard clearance:

0.10 – 0.62 mm (0.0039 – 0.0244 in.)

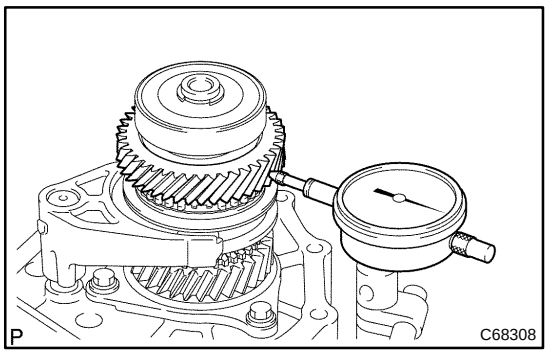

14. INSPECT 6TH GEAR RADIAL CLEARANCE

(a) Using a dial indicator, measure the 6th gear radial clearance.

Standard clearance:

0.009 – 0.050 mm (0.0004 – 0.0020 in.)

If the clearance is out of the specification, replace the 6th gear needle roller bearing.

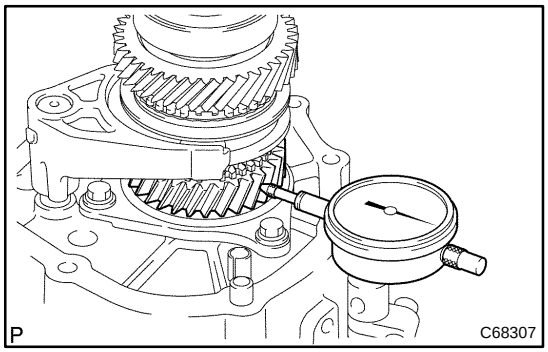

15. INSPECT 5TH GEAR RADIAL CLEARANCE

(a) Using a dial indicator, measure the 5th gear radial clearance.

Standard clearance:

0.015 – 0.056 mm (0.0006 – 0.0022 in.)

If the clearance is out of specification, replace the 5th gear needle roller bearing.

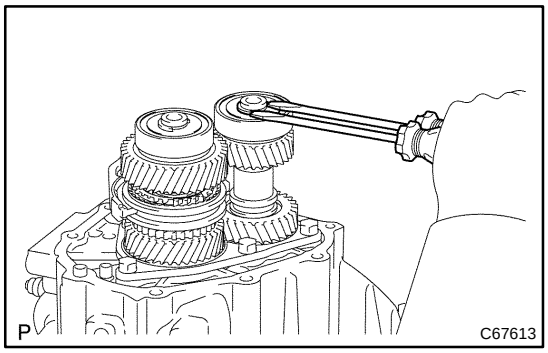

16. REMOVE COUNTER GEAR 6TH

(a) Using 2 screwdrivers and a hammer, remove the output shaft RR snap ring from the output shaft.

NOTICE:

Using a waste to prevent the snap ring from the being scattered.

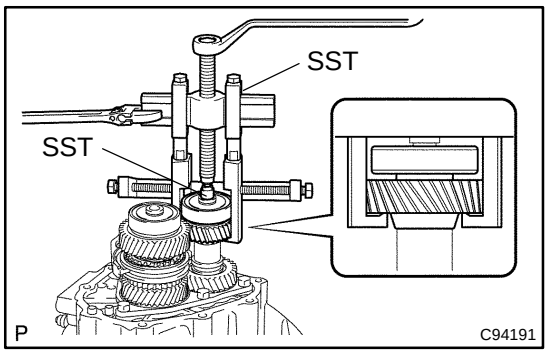

(b) Using SST, remove output shaft RR bearing with 6th counter gear from the output shaft.

SST 09950–40011 (09951–04010, 09952–04010, 09953–04020, 09954–04010, 09955–04021, 09957–04010, 09958–04011), 09950–60010 (09951–00190)

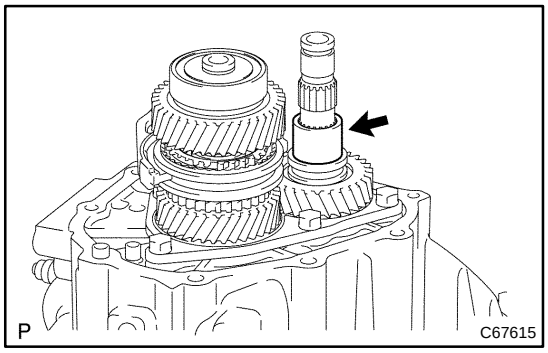

17. REMOVE OUTPUT GEAR SPACER

(a) Remove the output gear spacer from the output shaft.

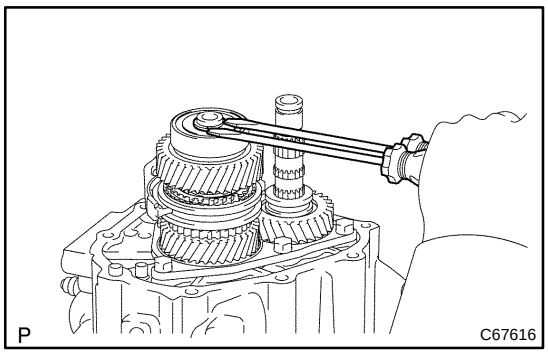

18. REMOVE 6TH GEAR SUB–ASSY

(a) Using 2 screwdrivers and a hammer, remove the input shaft snap ring from the input shaft.

NOTICE:

Using a waste to prevent the snap ring from the being scattered.

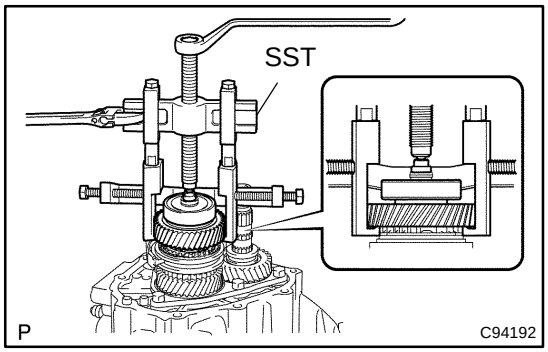

(b) Using SST, remove the input shaft radial ball bearing RR with 6th gear sub–assy from the input shaft.

SST 09950–40011 (09951–04010, 09952–04010, 09953–04020, 09954–04010, 09955–04021, 09957–04010, 09958–04011)

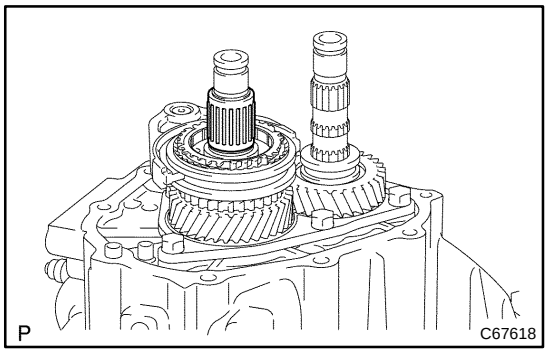

19. REMOVE 6TH GEAR NEEDLE ROLLER BEARING

(a) Remove 6th gear needle roller bearing from the input shaft.

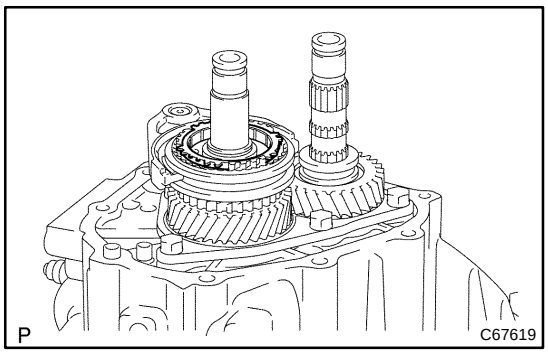

20. REMOVE SYNCHRONIZER RING NO.3 (FOR 6TH GEAR MT)

(a) Remove the synchronizer ring No.3 from the input shaft.

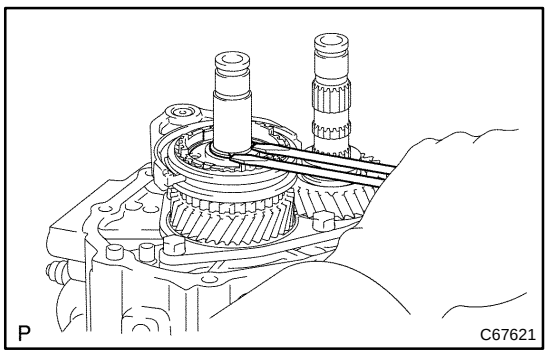

21. REMOVE TRANSMISSION CLUTCH HUB NO.3

(a) Remove the 6th gear spacer.

(b) Using 2 screwdrivers and a hammer, remove the transmission clutch hub No.3 shaft snap ring from the input shaft.

NOTICE:

Using a waste to prevent the snap ring from the being scattered.

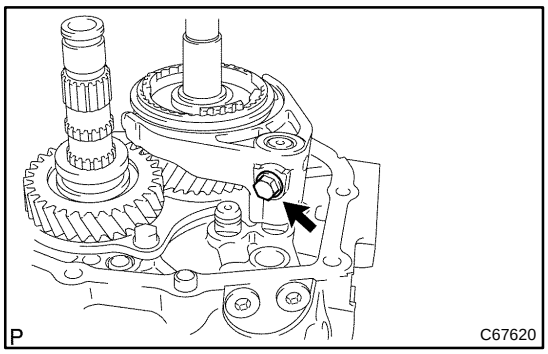

(c) Remove the shift fork lock bolt from the shift fork No.3.

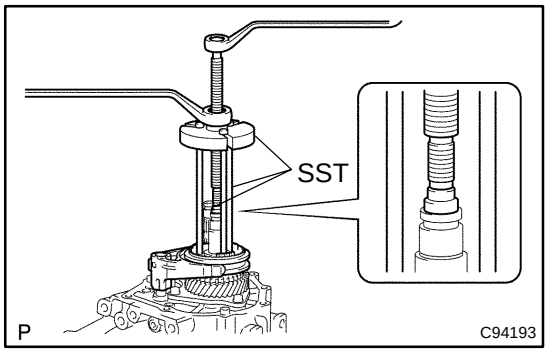

(d) Using SST, remove the transmission clutch hub No.3 with gear shift fork No.3 from the input shaft.
SST 09950–30012 (09951–03010, 09953–03010, 09957–04010), 09950–50013 (09954–05040)

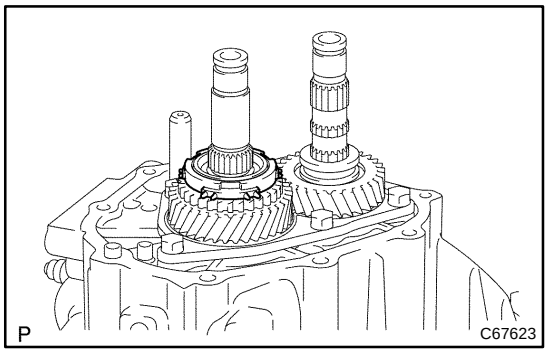

22. REMOVE SYNCHRONIZER RING NO.3 (FOR 5TH GEAR MT)

(a) Remove the synchronizer ring No.3 from the 5th gear.

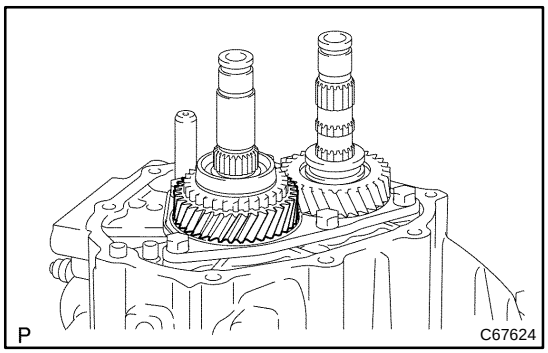

23. REMOVE 5TH GEAR

(a) Remove the 5th gear from the input shaft.

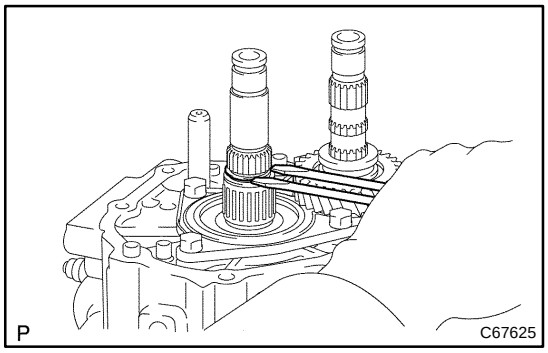

24. REMOVE 5TH GEAR NEEDLE ROLLER BEARING

(a) Using 2 screwdrivers and a hammer, remove the transmission clutch hub No.3 shaft snap ring from the input shaft.

NOTICE:

Using a waste to prevent the snap ring from the being scattered.

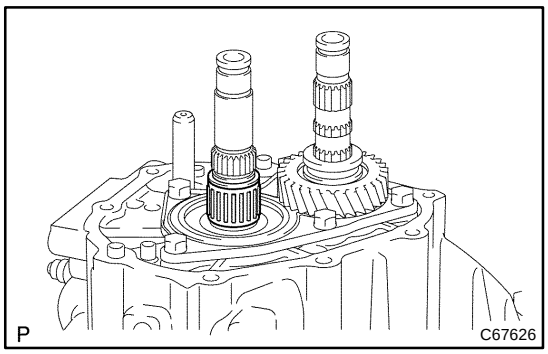

(b) Remove the 5th gear needle roller bearing and 2 5th gear bearing spacers from the input shaft.

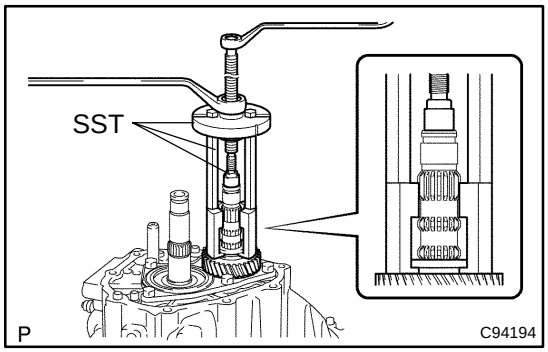

25. REMOVE 5TH DRIVEN GEAR

(a) Using SST, remove the 5th driven gear from the output shaft.

SST 09950–30012 (09951–03010, 09953–03010, 09954–03010, 09955–03011, 09957–04010), 09950–60010 (09951–00190)

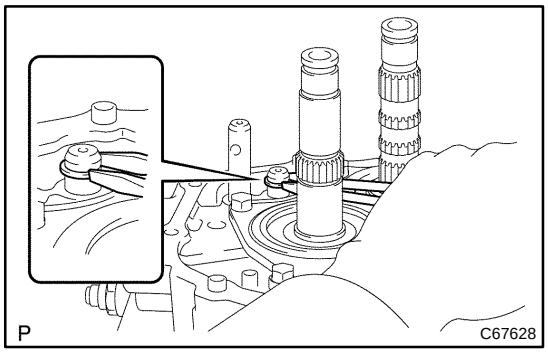

26. REMOVE SHIFT FORK SHAFT SHAFT SNAP RING

(a) Using 2 screwdrivers and a hammer, remove the shift fork shaft snap ring from the shift fork shaft No.2.

NOTICE:

Using a waste to prevent the snap ring from the being scattered.

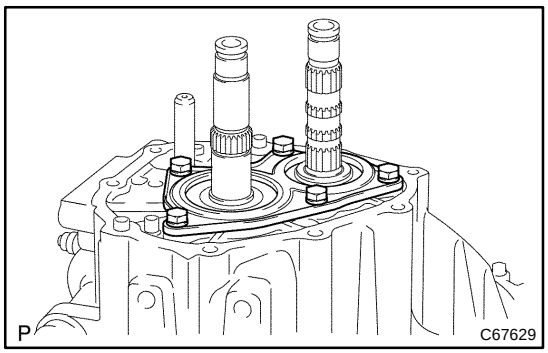

27. REMOVE BEARING RETAINER REAR (MTM)

(a) Remove the 5 bolts and bearing retainer rear (MTM) from the manual transmission case.

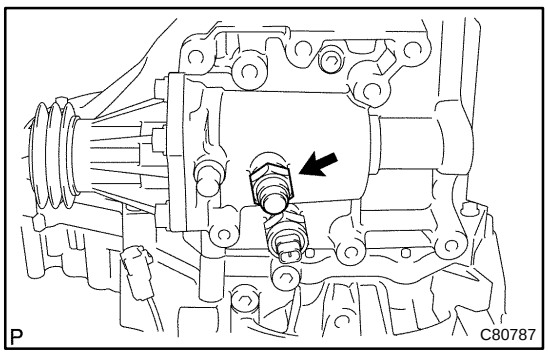

28. REMOVE LOCK BALL ASSY NO.1

(a) Remove the lock ball assy No.1 from the manual transmission case.

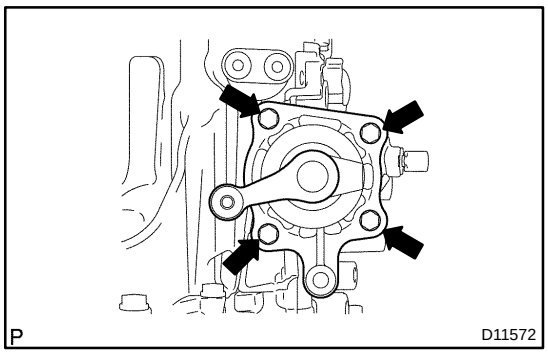

29. REMOVE SHIFT & SELECT LEVER SHAFT ASSY

(a) Remove the 4 bolts and shift & select lever shaft assy and gasket from the manual transmission case.

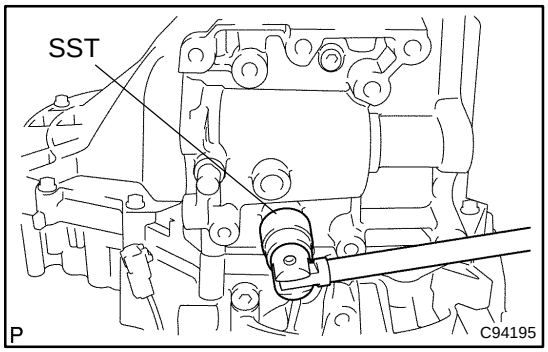

30. REMOVE BACK UP LAMP SWITCH ASSY

(a) Using SST, remove the back up lamp switch assy and gasket from the manual transmission case.
SST 09817–16011

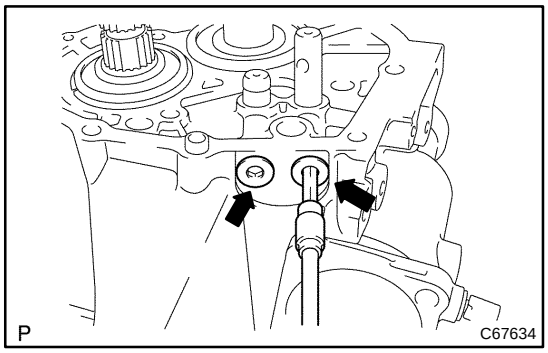

31. REMOVE SHIFT DETENT BALL

(a) Using a socket hexagon wrench 6, remove the 2 shift detent ball plugs from the manual transmission case.

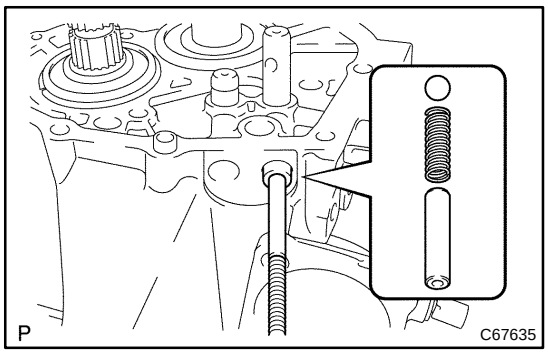

(b) Using a magnetic finger, remove the 2 shift detent ball spring seats, 2 shift detent ball compression springs and 2 shift detent balls from the manual transmission case.

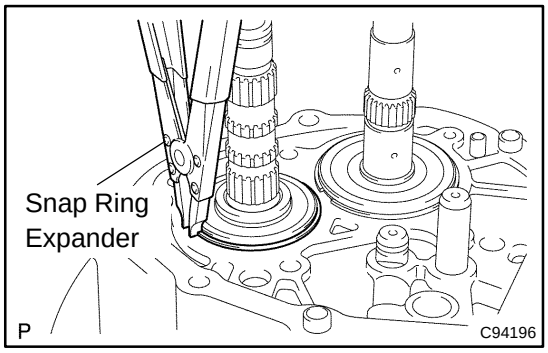

32. REMOVE OUTPUT SHAFT REAR BEARING HOLE SNAP RING

(a) Using a snap ring expander, remove the output shaft rear bearing hole snap ring from the output shaft.

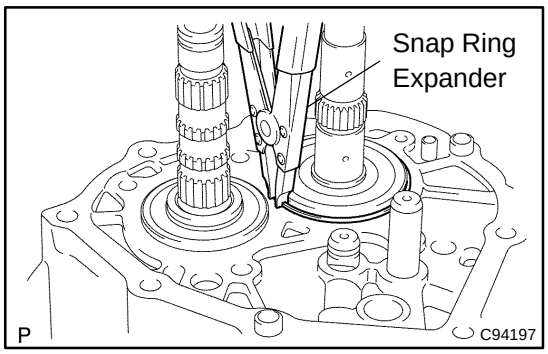

33. REMOVE INPUT SHAFT REAR BEARING HOLE SNAP RING

(a) Using a snap ring expander, remove the input shaft rear bearing hole snap ring.

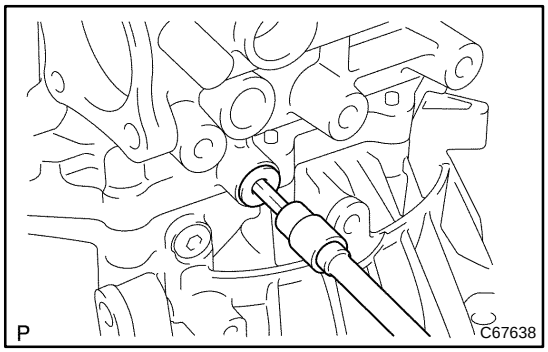

34. REMOVE MANUAL TRANSMISSION CASE PLUG

(a) Using a socket hexagon wrench 6, remove the manual transmission case plug from the manual transmission case.

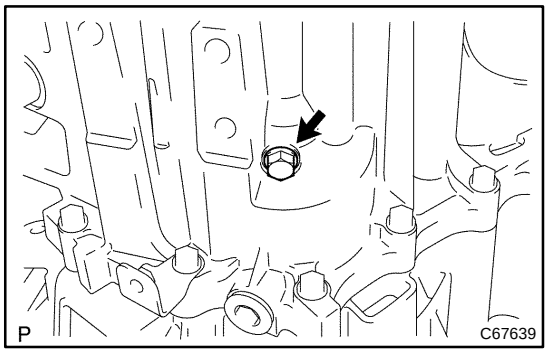

35. REMOVE REVERSE IDLER GEAR SHAFT BOLT

(a) Remove the reverse idler gear shaft bolt and gasket from the manual transmission case.

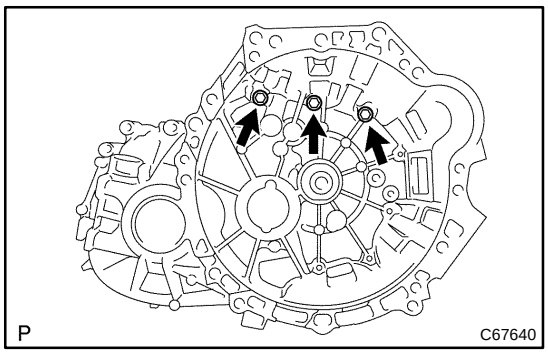

36. REMOVE MANUAL TRANSMISSION CASE

(a) Remove the 3 bolts from the transaxle case side.

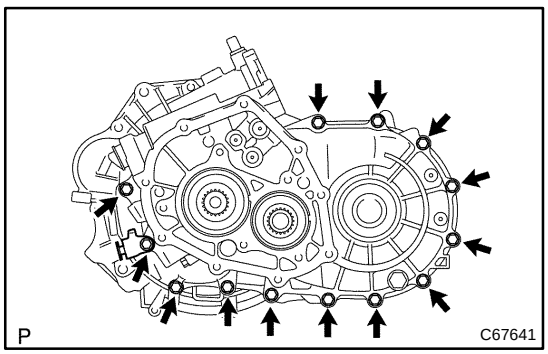

(b) Remove the 13 bolts from manual transmission case side.

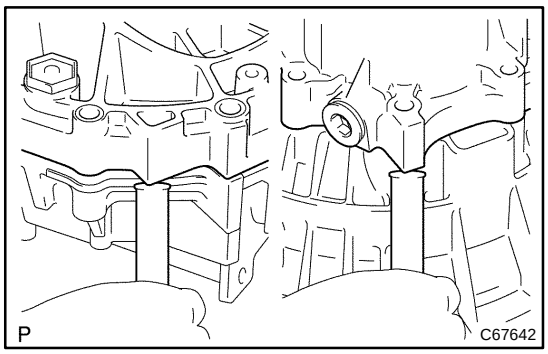

(c) Using a brass bar and a hammer, remove the manual transmission case from the transaxle case.

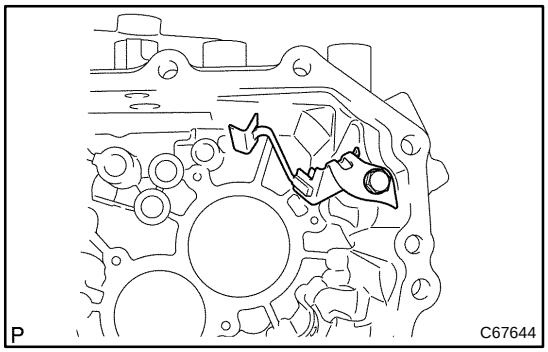

37. REMOVE OIL RECEIVER PIPE NO.1 (MTM)

(a) Remove the bolt and oil receiver pipe No.1 from the manual transmission case.

NOTICE:

Be careful not to damage the oil receiver pipe No.1.

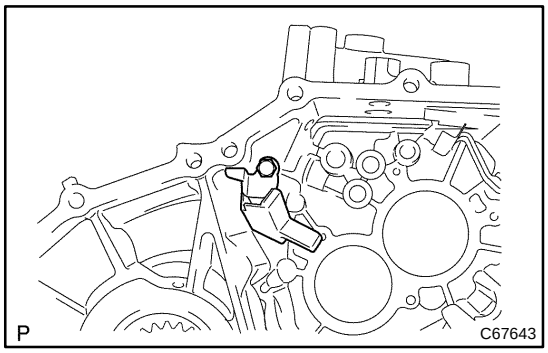

38. REMOVE OIL RECEIVER PIPE NO.2 (MTM)

(a) Remove the bolt and oil receiver pipe No.2 from the manual transmission case.

NOTICE:

Be careful not to damage the oil receiver pipe No.2.

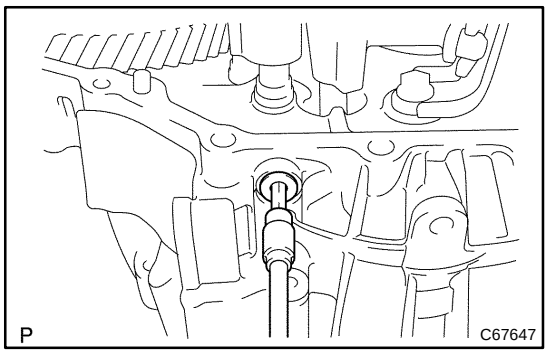

39. REMOVE 1ST GEAR THRUST WASHER PIN OR BALL

(a) Using a socket hexagon wrench 6, remove the shift detent ball plug from the transaxle case.

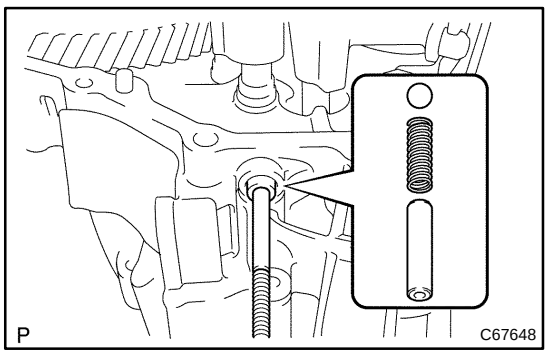

(b) Using a magnetic finger, remove the shift detent ball spring seat, shift detent ball compression spring and shift detent ball from the transaxle case.

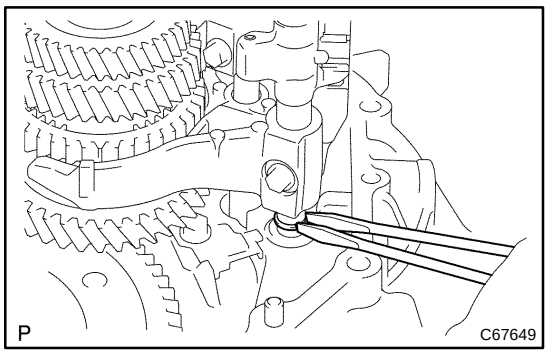

40. REMOVE GEAR SHIFT FORK SHAFT SUB–ASSY NO.1

(a) Using 2 screwdrivers and a hammer, remove shaft snap ring.

NOTICE:

Using a waste to prevent the snap ring from the being scattered.

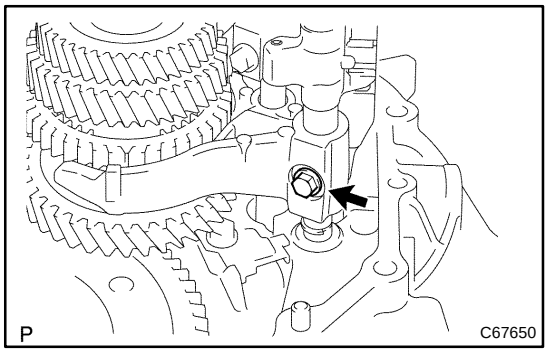

(b) Remove the gear shift fork lock bolt and gear shift fork shaft sub–assy No.1.

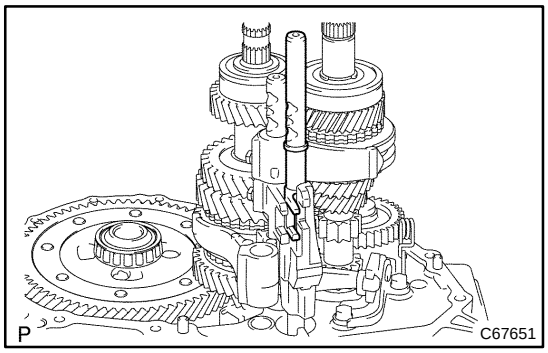

41. REMOVE GEAR SHIFT FORK SHAFT NO.3

(a) Remove the shift fork shaft No.3 from the transaxle case.

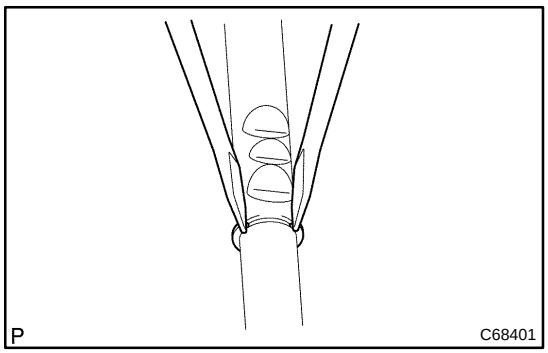

(b) Using 2 screwdrivers and a hammer, remove the shaft snap ring from the shift fork shaft No.3.

NOTICE:

Using a waste to prevent the snap ring from the being scattered.

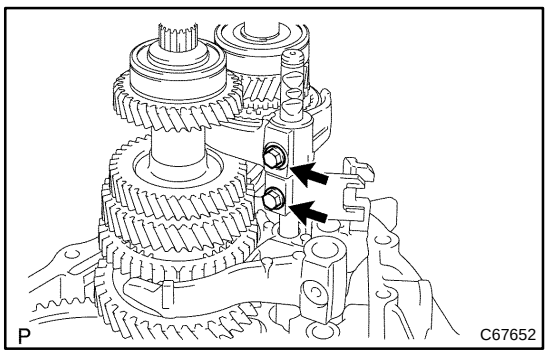

42. REMOVE GEAR SHIFT FORK SHAFT NO.2

(a) Remove the 2 gear shift fork lock bolts from the gear shift fork No.2 and gear shift head No.1.

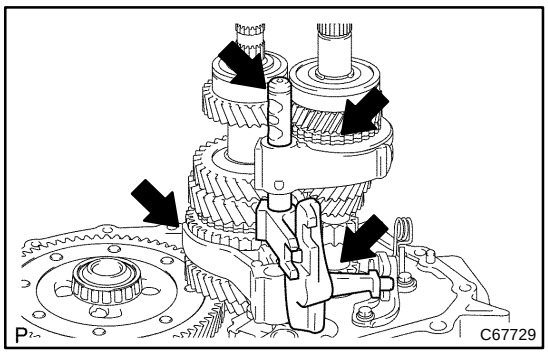

(b) Remove the gear shift fork shaft No.2, gear shift fork No.2, gear shift fork No.1, gear shift head No.1 and reverse shift fork.

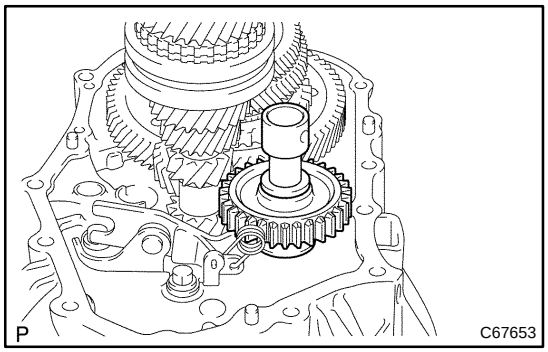

43. REMOVE REVERSE IDLER GEAR SUB–ASSY

(a) Remove the reverse idler gear shaft, thrust washer and reverse idler gear sub–assy from the transaxle case.

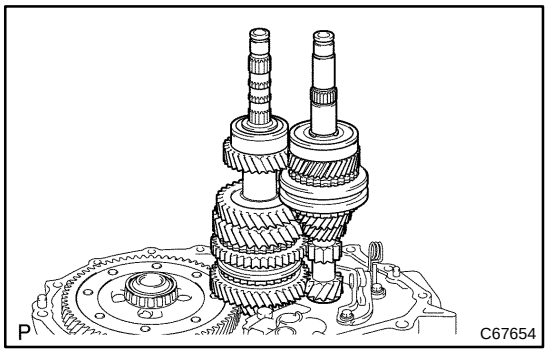

44. REMOVE INPUT SHAFT ASSY

(a) Remove the input shaft assy with output shaft assy from the transaxle case.

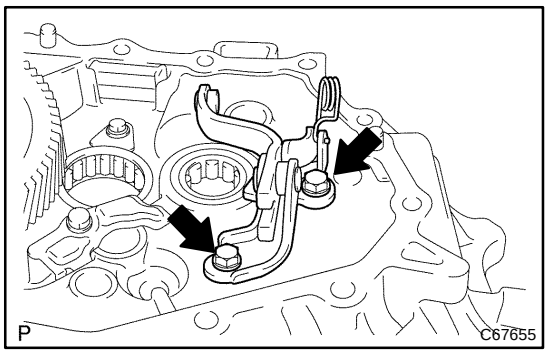

45. REMOVE REVERSE SHIFT ARM BRACKET ASSY

(a) Remove the 2 bolts and reverse shift arm bracket assy from the transaxle case.

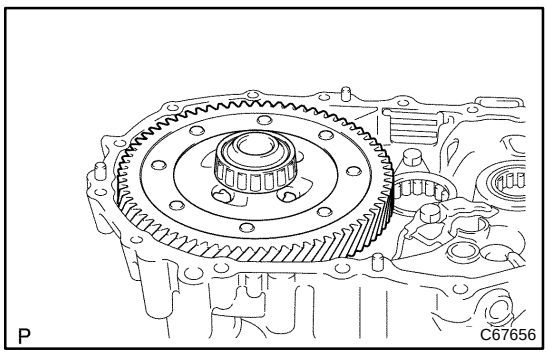

46. REMOVE DIFFERENTIAL CASE ASSY

(a) Remove the differential case assy from the transaxle case.

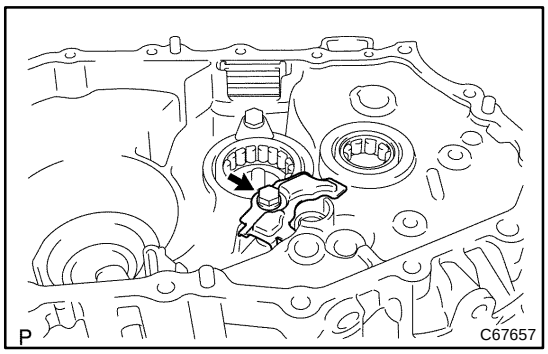

47. REMOVE MANUAL TRANSAXLE CASE RECEIVER

(a) Remove the bolt and manual transaxle case receiver from the transaxle case.

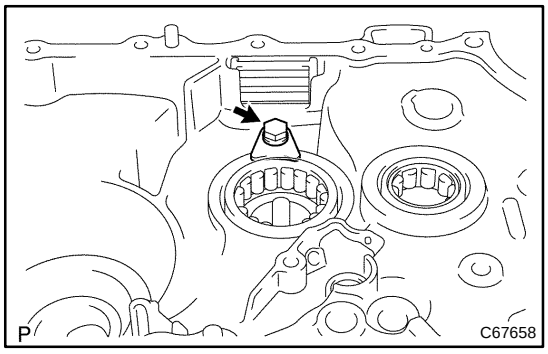

48. REMOVE BEARING LOCK PLATE

(a) Remove the bolt and bearing lock plate from the transaxle case.

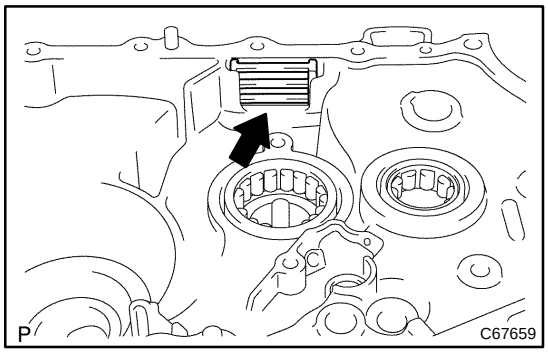

49. REMOVE TRANSMISSION MAGNET

(a) Remove the transmission magnet from the transaxle case.

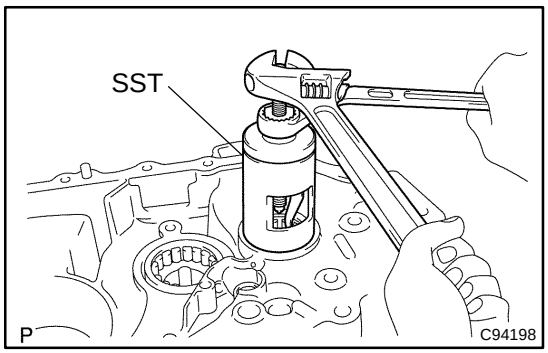

50. REMOVE INPUT SHAFT FRONT BEARING

(a) Using SST, remove the input shaft front bearing (outer race) from the transaxle case.
SST 09612–24014 (09613–22011)

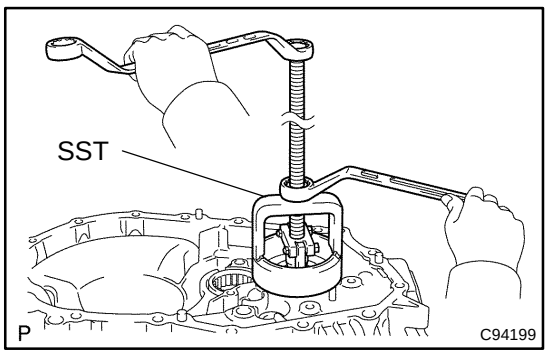

51. REMOVE FRONT TRANSAXLE CASE OIL SEAL

(a) Using SST, remove the front transaxle case oil seal from the transaxle case.
SST 09612–65014 (09612–01040, 09612–01050)

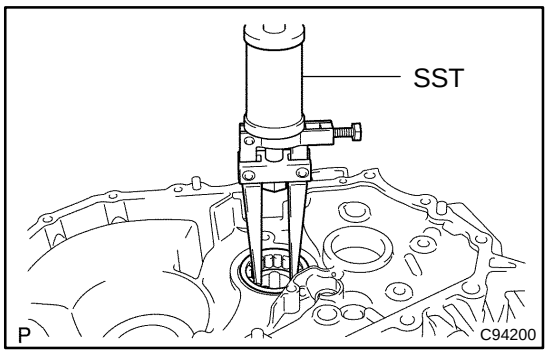

52. REMOVE OUTPUT SHAFT FRONT BEARING

(a) Using SST, remove the output shaft front bearing from the transaxle case.
SST 09308–00010

NOTICE:

Do not apply unreasonable force to the transaxle case when installing it.

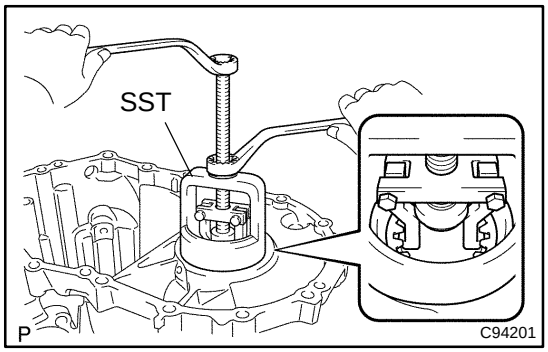

53. REMOVE FR DIFFERENTIAL CASE REAR TAPERED ROLLER BEARING

(a) Using SST, remove the front differential case rear tapered roller bearing (outer race) and shim from manual transmission case.
SST 09612–65014 (09612–01040, 09612–01050)

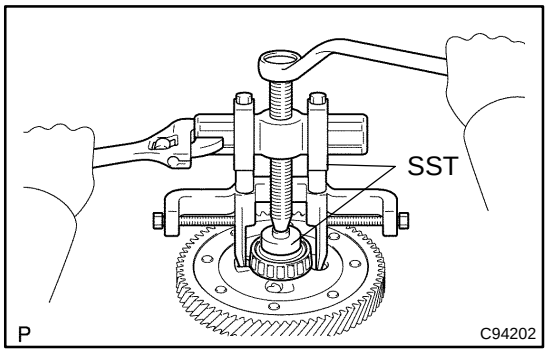

(b) Using SST, remove the FR differential case rear tapered roller bearing (inner race) from the front differential case.
SST 09612–65014 (09612–01040, 09612–01050), 09950–40011 (09951–00390, 09951–04010, 09952–04010, 09953–04020, 09954–04010, 09955–04061, 09957–04010, 09958–04011), 09950–60010

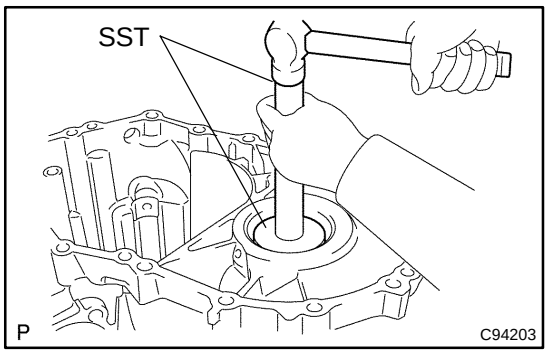

54. REMOVE TRANSMISSION CASE OIL SEAL

(a) Using SST and a hammer, remove transmission case oil seal from the manual transmission case.
SST 09950–60010 (09951–00530), 09950–70010 (09951–07150)

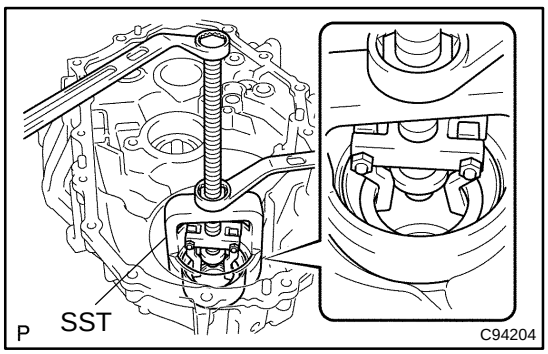

55. REMOVE FR DIFFERENTIAL CASE FRONT TAPERED ROLLER BEARING

(a) Using SST, remove the front differential case front tapered roller bearing (outer race) and front differential case washer FR from the transaxle case.
SST 09612–65014 (09612–01040, 09612–01050)

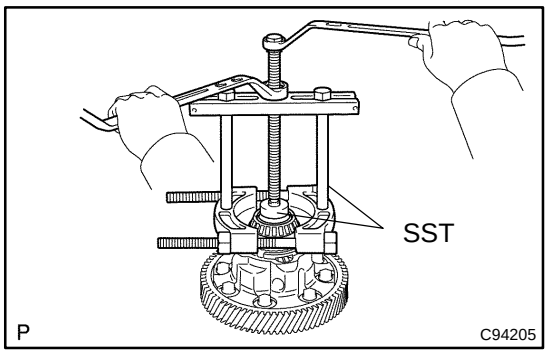

(b) Using SST, remove the FR differential case front tapered roller bearing (inner race) from the front differential case.
SST 09950–00020, 09950–00030, 09950–40011 (09957–04010), 09950–60010 (09951–00390)

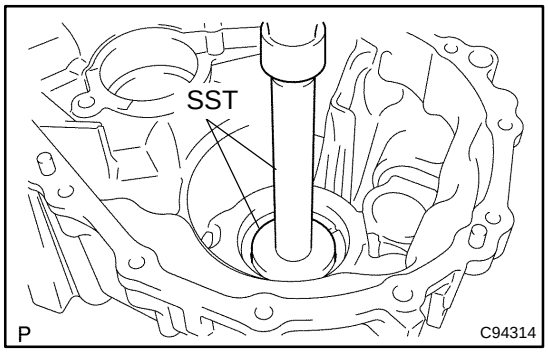

56. REMOVE TRANSAXLE CASE OIL SEAL

(a) Using SST and a hammer, remove transaxle case oil seal from the transaxle case.
SST 09950–60010 (09951–00600), 09950–70010 (09951–07100)

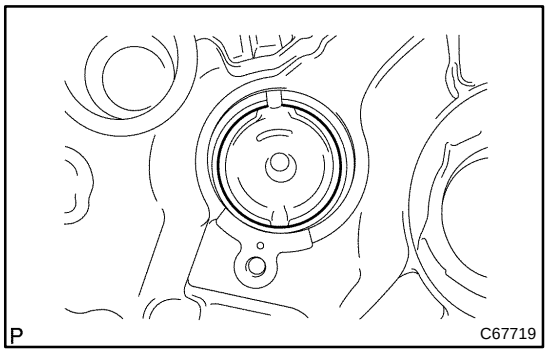

57. REMOVE OUTPUT SHAFT (MTM) COVER

(a) Remove the output (MTM) shaft cover from the transaxle case.

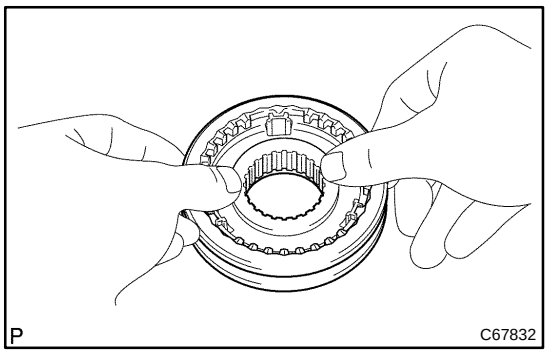

58. REMOVE TRANSMISSION HUB SLEEVE NO.3

(a) Remove the transmission hub sleeve No.3, 3 synchromesh shifting key No.3 and 2 synchromesh shifting key spring No.3.

NOTICE:
Using a waste to prevent the synchromesh shifting key and spring from the being scattered.

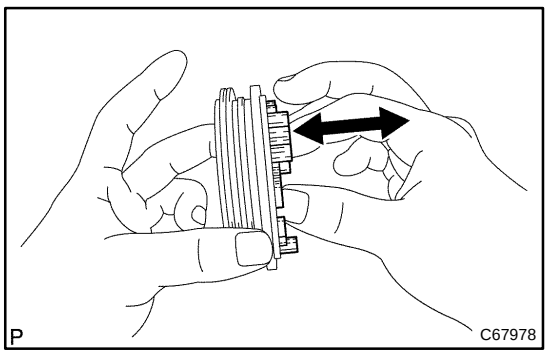

59. INSPECT TRANSMISSION HUB SLEEVE NO.3

(a) Check the sliding condition between the transmission hub sleeve No.3 and transmission clutch hub No.3.

(b) Check that spline gears of the transmission hub sleeve No.3 is not worn down.

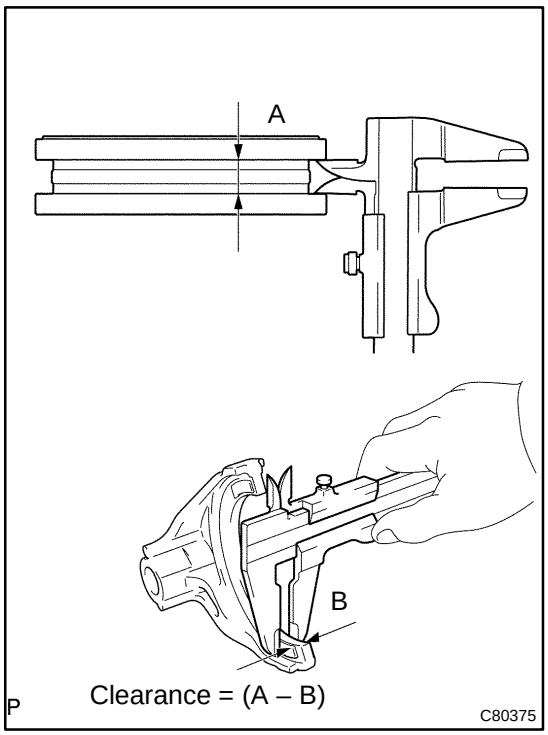

(c) Using a vernier calipers, inspect the transmission hub sleeve No.3 and gear shift fork No.3 as shown in the illustration.

Standard clearance:

0.31 – 0.89 mm (0.0122 – 0.035 in.)

If the clearance out of specification, replace the transmission hub sleeve No.3 and gear shift fork No.3.

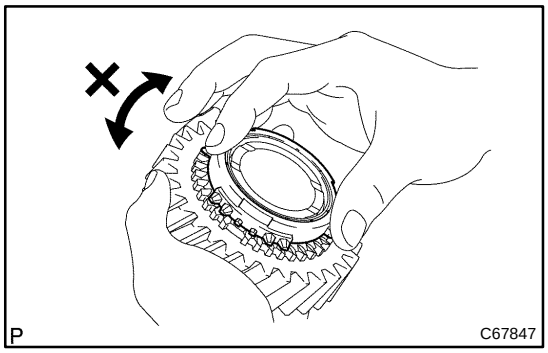

60. INSPECT SYNCHRONIZER RING NO.3 (FOR 6TH GEAR MT)

(a) Check for wear of damage.

(b) Check the braking effect of the synchronizer ring. Turn the synchronizer ring in one direction while pushing it to the gear cone, check that the ring locks.

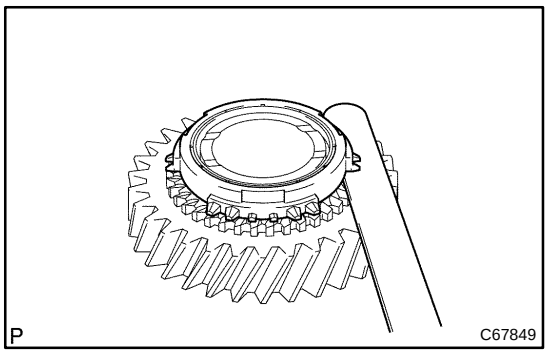

(c) Using a feeler gauge, measure the clearance between the synchronizer ring back and gear spline end.

Standard clearance:

0.75 – 1.65 mm (0.0295 – 0.065 in.)

If the clearance is out of specification, replace the synchronizer ring No.3.

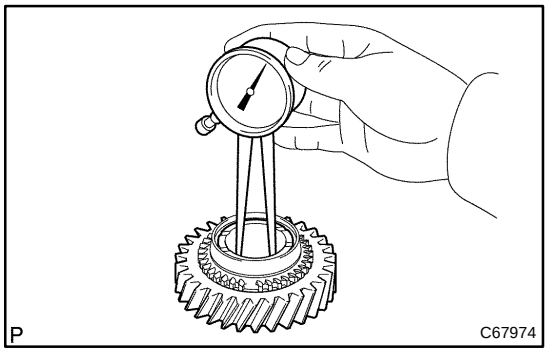

61. INSPECT 6TH GEAR SUB–ASSY

(a) Using a caliper gauge, inspect the 6th gear inner diameter.

Inner diameter:

New gear: mm (in.)	Maximum inner diameter: mm (in.)
28.015 – 28.031 (1.1030 – 1.1036)	28.031 (1.1036)

If the clearance is exceeds the maximum, replace the 6 th gear sub–assy.

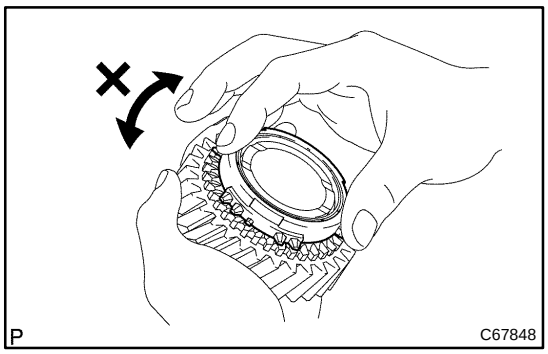

62. INSPECT SYNCHRONIZER RING NO.3 (FOR 5TH GEAR MT)

(a) Check the braking effect of the synchronizer ring.
Turn the synchronizer ring in one direction while pushing it to the gear cone, check that the ring locks.

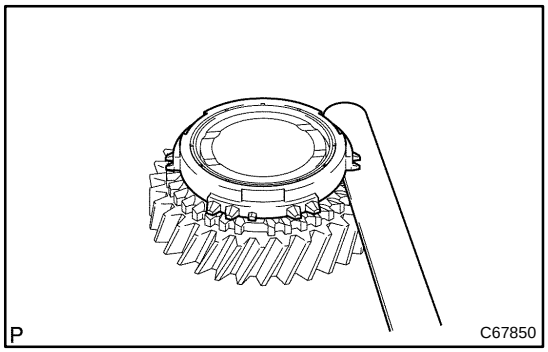

(b) Using a feeler gauge, measure the clearance between the synchronizer ring back and 5th gear spline end.
Standard clearance:
0.75 – 1.65 mm (0.0295 – 0.0650 in.)

If the clearance is out of specification, replace the synchronizer ring No.3.

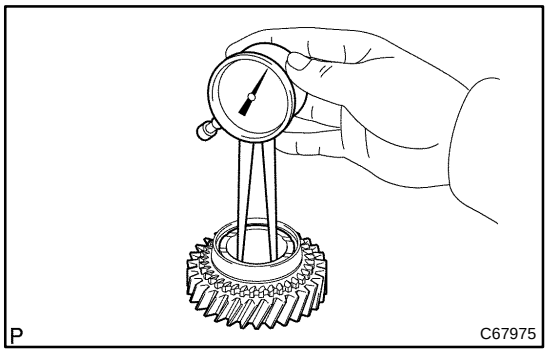

63. INSPECT 5TH GEAR

(a) Using a caliper gauge, inspect the 5th gear inner diameter.

Inner diameter:

New gear: mm (in.)	Maximum inner diameter: mm (in.)
29.915 – 29.931 (1.1778 – 1.1784)	29.931 (1.1784)

If the inner diameter is exceeds the maximum, replace the 5th gear.

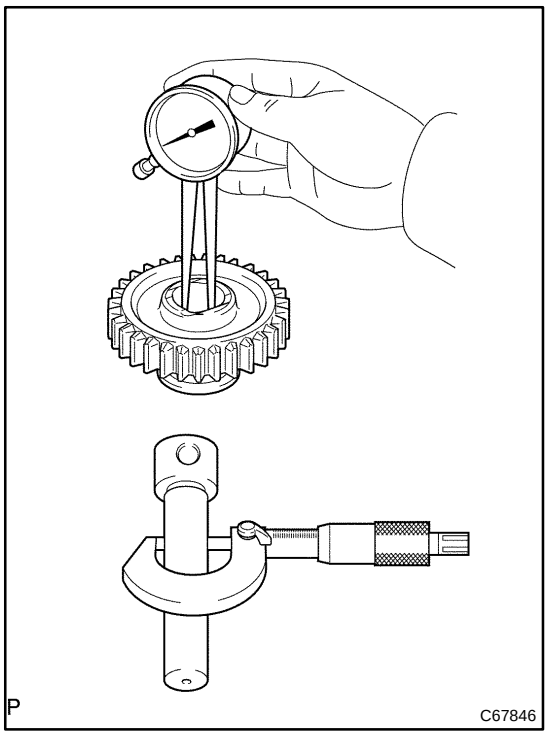

64. INSPECT REVERSE IDLER GEAR SUB–ASSY

(a) Using a caliper gauge, inspect the reverse idler gear sub–assy as shown in the illustration.

Inner diameter:

New gear: mm (in.)	Maximum inner diameter: mm (in.)
18.040 – 18.058 (0.7102 – 0.7109)	18.058 (0.7109)

If the inner diameter is exceeds the maximum, replace the reverse idler gear sub–assy.

(b) Using a micrometer, inspect the reverse idler gear shaft as shown in the illustration.

Outer diameter:

New idler gear shaft: mm (in.)	Minimum outer diameter: mm (in.)
17.966 – 17.984 (0.7073 – 0.7080)	17.966 (0.7073)

If the outer diameter is exceeds the minimum, replace the reverse idler gear shaft.

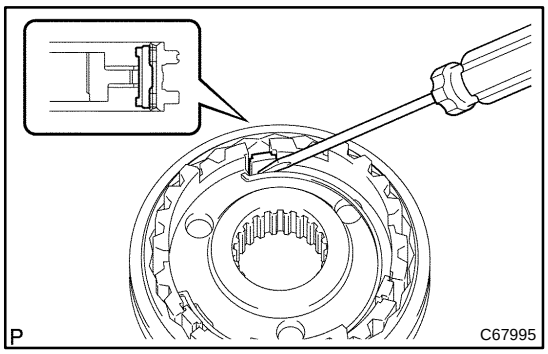

65. INSTALL TRANSMISSION HUB SLEEVE NO.3

(a) Coat the transmission hub sleeve No.3 with gear oil, install it to the transmission clutch hub No.3.

NOTICE:

Do not set the transmission clutch hub No.3 in incorrect orientation.

(b) Using a screwdriver, install the 2 synchromesh shifting key spring No.3 and 3 synchromesh shifting key No.3.

NOTICE:

Do not set both openings of the shifting key spring in the same position.

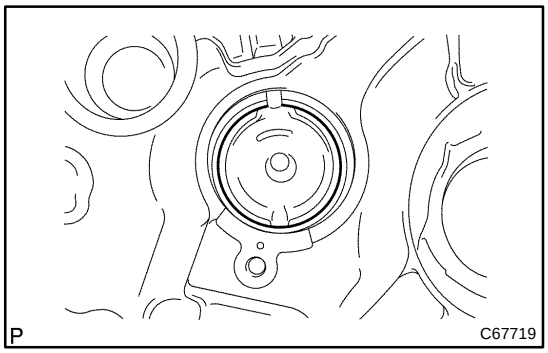

66. INSTALL OUTPUT SHAFT (MTM) COVER

(a) Coat the output shaft (MTM) cover with MP grease, install it to the transaxle case.

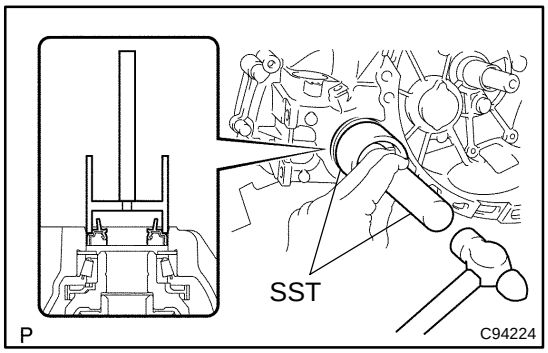

67. INSTALL TRANSAXLE CASE OIL SEAL

(a) Using SST and a hammer, install the transaxle case oil seal No.2 to the transaxle case.

SST 09726–27012 (09726–02041), 09950–70010 (09951–07100)

Driven in depth: 1.9 ± 0.3 mm (0.075 ± 0.012 in.)

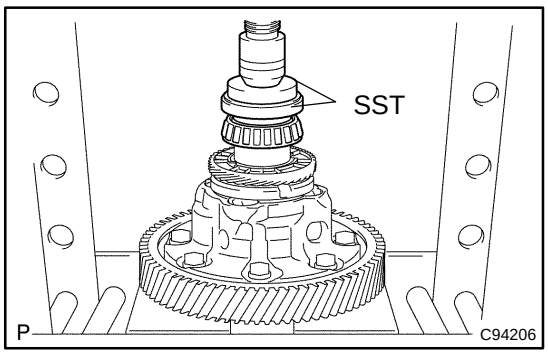

68. INSTALL FR DIFFERENTIAL CASE FRONT TAPERED ROLLER BEARING

(a) Using SST and a press, install FR differential case front tapered roller bearing (inner race) to the front differential case.

SST 09350–32014 (09351–32120), 09950–60010 (09951–00530)

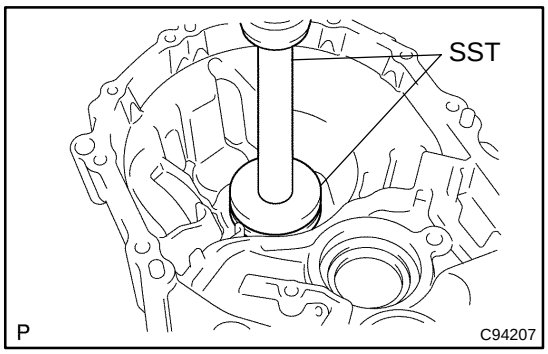

(b) Using SST and a press, install the FR differential case front bearing spacer and FR differential case front tapered roller bearing (outer race) to the transaxle case.
SST 09950–60020 (09951–00680), 09950–70010 (09951–07150)

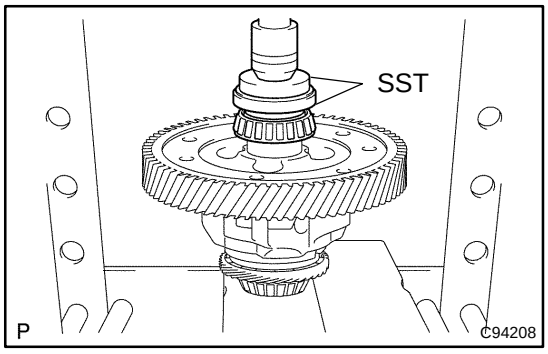

69. INSTALL FR DIFFERENTIAL CASE REAR TAPERED ROLLER BEARING

(a) Using SST and a press, install the FR differential case rear tapered roller bearing (inner race) to the front differential case.
SST 09350–32014 (09351–32120), 09950–60010 (09951–00530)

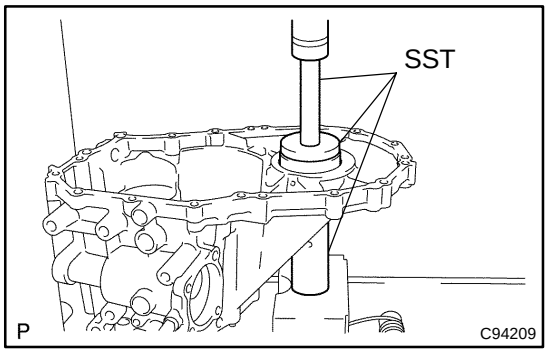

(b) Using SST and a press, install the front differential case shim RR and FR differential case rear tapered roller bearing (outer race) to the manual transmission case.
SST 09309–36010, 09950–60020 (09951–00710), 09950–70010 (09951–07150)

HINT:
Use a front differential case shim RR of the same thickness with the remove one.

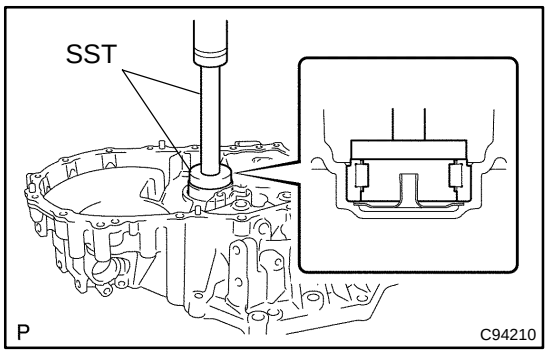

70. INSTALL OUTPUT SHAFT FRONT BEARING

(a) Coat the new output shaft front bearing with gear oil, using SST and a press, install it to the transaxle case.
SST 09950–60010 (09951–00550), 09950–70010 (09951–07150)

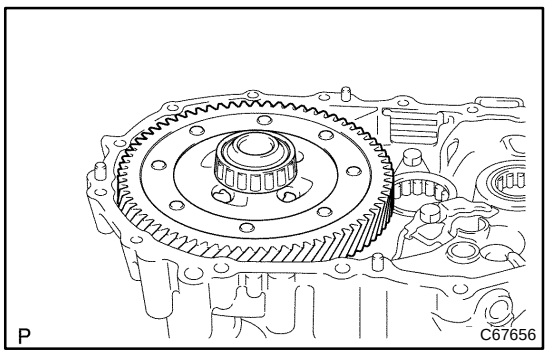

71. ADJUST DIFFERENTIAL SIDE BEARING RRELOAD

(a) Coat the differential case assy with gear oil, install it to the transaxle case.

(b) Install the manual transmission case with 16 bolts.
Torque: 29.4 N·m (300 kgf·cm, 22 ft·lbf)

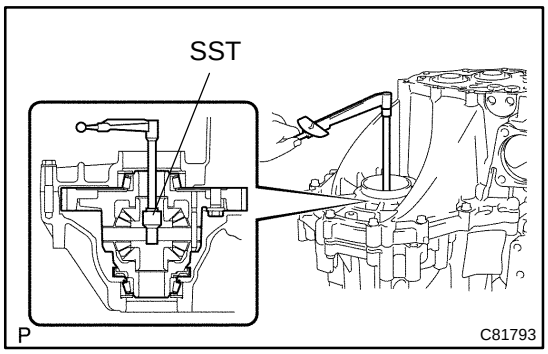

(c) Using SST and a torque wrench, turn the deferential case assy right and left 2 or 3 times to allow the bearings to settle.
SST 09564–32011

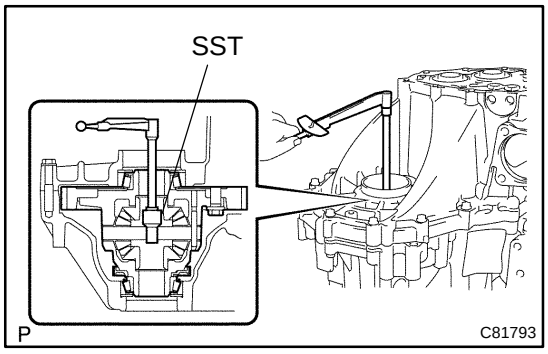

(d) Using SST and a torque wrench, measure the preload.
SST 09564–32011

Preload:

Bearing	Torque
New	0.78 – 1.57 N·m (8 – 16 kgf·cm, 7 – 14 in.·lbf)
Used	0.49 – 0.98 N·m (5 – 10 kgf·cm, 4 – 9 in.·lbf)

If the preload is out of the specification, select the front differential case shim RR adjust it.
HINT:

Shim thickness:

Part No.	Thickness: mm (in.)	Make
90564–41014	2.10 (0.0827)	AA
90564–41015	2.15 (0.0846)	BB
90564–41016	2.20 (0.0866)	CC
90564–41017	2.25 (0.0886)	DD
90564–41018	2.30 (0.0906)	EE
90564–41019	2.35 (0.0925)	FF
90564–41020	2.40 (0.0945)	GG
90564–41021	2.45 (0.0965)	HH
90564–41022	2.50 (0.0984)	JJ
90564–41023	2.55 (0.1004)	KK
90564–41024	2.60 (0.1024)	LL
90564–41025	2.65 (0.1043)	MM
90564–41026	2.70 (0.1063)	NN
90564–41027	2.75 (0.1083)	PP
90564–41028	2.80 (0.1102)	QQ
90564–41029	2.85 (0.1122)	RR
90564–41030	2.90 (0.1142)	SS
90564–41031	2.95 (0.1161)	TT
90564–41032	3.00 (0.1181)	UU

(e) Remove the 16 bolts and manual transmission case.
(f) Remove the differential case assy from the transaxle case.

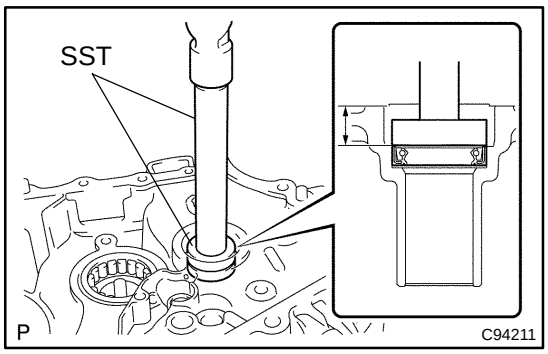

72. INSTALL FRONT TRANSAXLE CASE OIL SEAL

(a) Using SST and a hammer, install a new front transaxle case oil seal to the transaxle case.

SST 09950–60010 (09951–00370), 09950–70010 (09951–07150)

Driven in depth: 15.6 – 16.0 mm (0.6142 – 0.6299 in.)

(b) Coat the lip of the front transaxle case oil seal with MP grease.

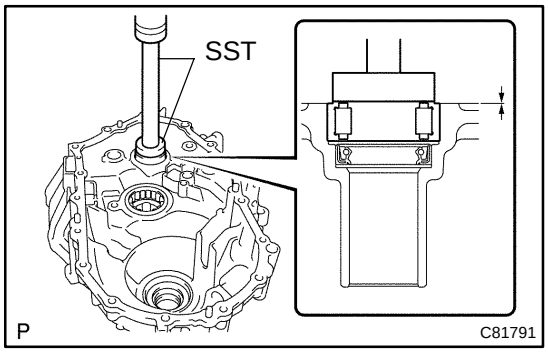

73. INSTALL INPUT SHAFT FRONT BEARING

(a) Coat new input shaft front bearing with MP grease, using SST and a press, install it to the transaxle case.

SST 09950–60010 (09951–00420), 09950–70010 (09951–07150)

Driven in depth: 0 – 0.30 mm (0 – 0.0118 in.)

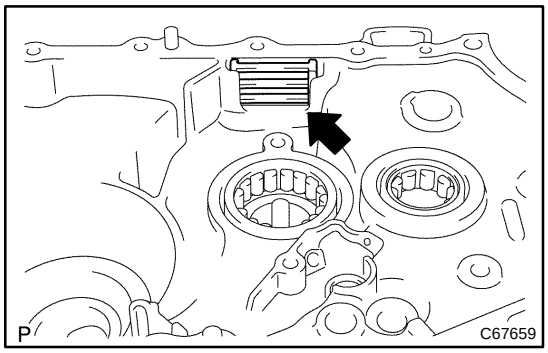

74. INSTALL TRANSMISSION MAGNET

(a) Clean the transmission magnet, install it to the transaxle case.

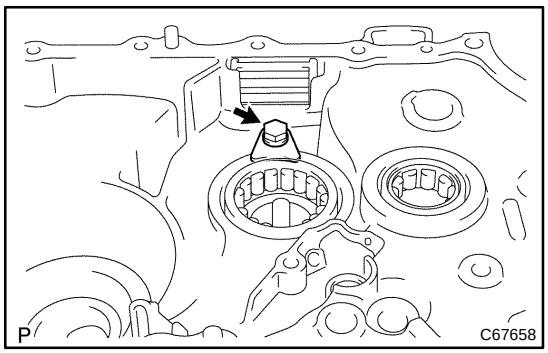

75. INSTALL BEARING LOCK PLATE

(a) Install the bearing lock plate with bolt to the transaxle case.

Torque: 11.3 N·m (115 kgf·cm, 8 ft·lbf)

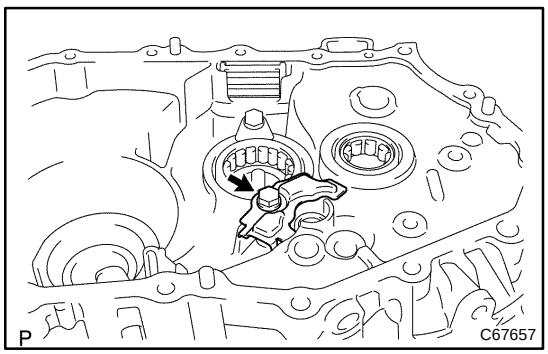

76. INSTALL MANUAL TRANSAXLE CASE RECEIVER

(a) Install the manual transaxle case receiver with bolt to the transaxle case.

Torque: 11.3 N·m (115 kgf·cm, 8 ft·lbf)

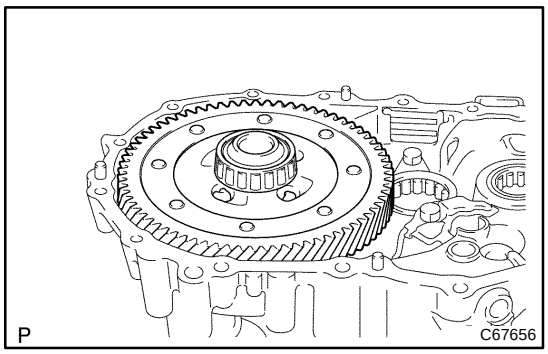

77. INSTALL DIFFERENTIAL CASE ASSY

(a) Coat the differential case tapered roller bearing with gear oil, install the differential case assy to the transaxle case.

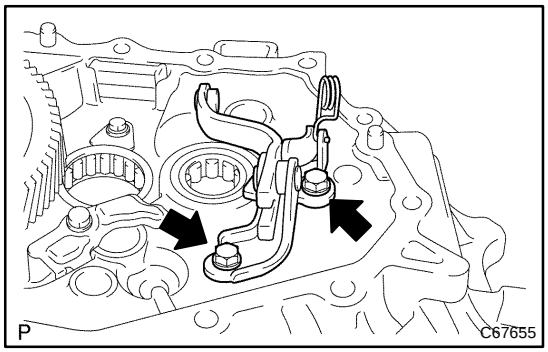

78. INSTALL REVERSE SHIFT ARM BRACKET ASSY

(a) Install the reverse shift arm bracket assy with 2 bolts to the transaxle case.

Torque: 17.2 N·m (175 kgf·cm, 13 ft·lbf)

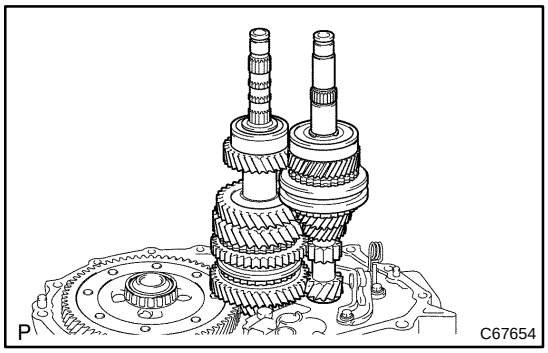

79. INSTALL INPUT SHAFT ASSY

(a) Coat the sliding and rotating surface of the input and output shafts with gear oil, install them to the transaxle case.

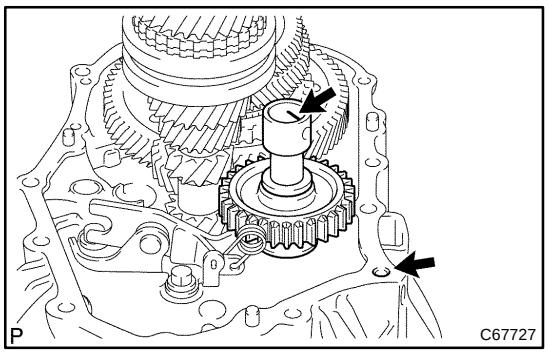

80. INSTALL REVERSE IDLER GEAR SUB–ASSY

(a) Coat the reverse idler gear sub–assy, thrust washer and reverse idler gear shaft with gear oil, install them to the transaxle case.

HINT:

Align the mark on the reverse idler gear shaft with the bolt hole shown in the illustration.

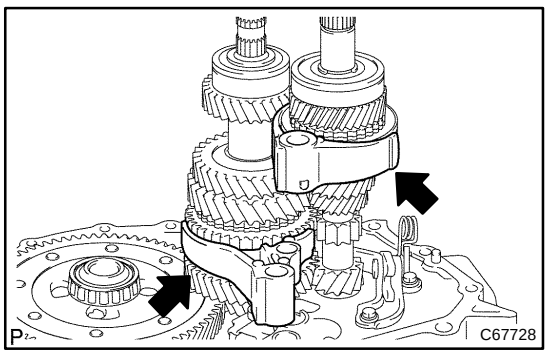

81. INSTALL GEAR SHIFT FORK SHAFT NO.2

(a) Coat the gear shift fork No.2 and gear shift fork No.1 with gear oil, install them to the input and output shafts.

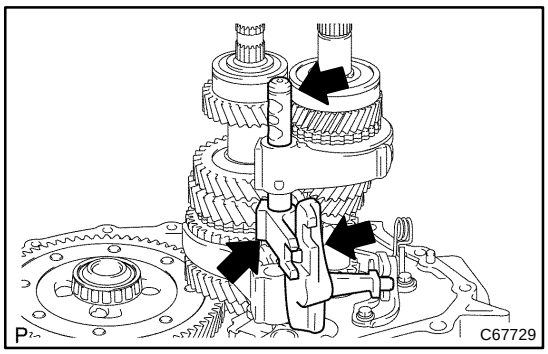

(b) Coat the gear shift fork shaft No.2 with gear oil, install the gear shift head No.1, reverse shift fork and gear shift fork shaft No.2.

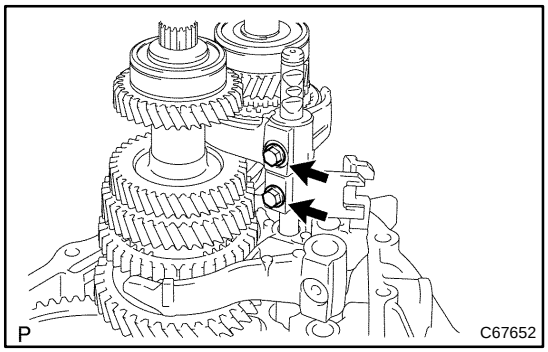

(c) Coat the 2 shift lock bolts with sealant, install them to the gear shift fork No.2 and gear shift head No.1.
Sealant:
Part No.08833–00080, THREE BOND 1344, LOCTITE 242 or equivalent
Torque: 15.7 N·m (160 kgf·cm, 12 ft·lbf)

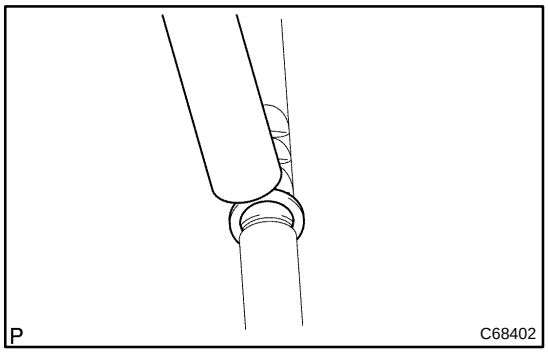

82. INSTALL GEAR SHIFT FORK SHAFT NO.3

(a) Using a brass bar and a hammer, install the shaft snap ring to the gear shift fork shaft No.3.

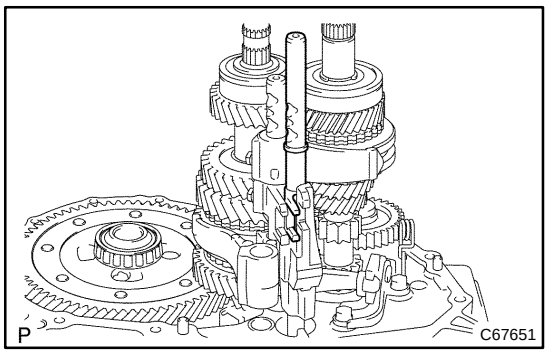

(b) Coat the gear shift fork shaft No.3 with gear oil, install it to the transaxle case.

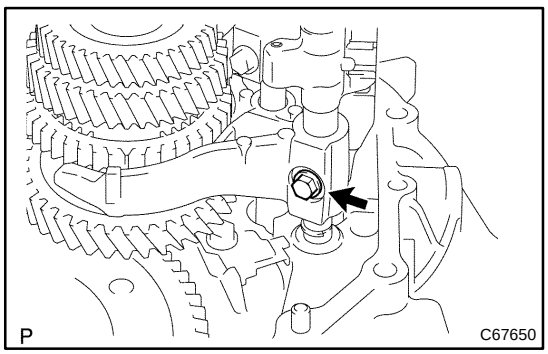

83. INSTALL GEAR SHIFT FORK SHAFT SUB–ASSY NO.1

(a) Coat the gear shift fork shaft sub–assy No.1 with gear oil, install it to the transaxle case.

(b) Coat the shift fork lock bolt with sealant, install it to the gear shift fork No.1.
Sealant:
Part No.08833–00080, THREE BOND 1344, LOCTITE 242 or equivalent
Torque: 15.7 N·m (160 kgf·cm, 12 ft·lbf)

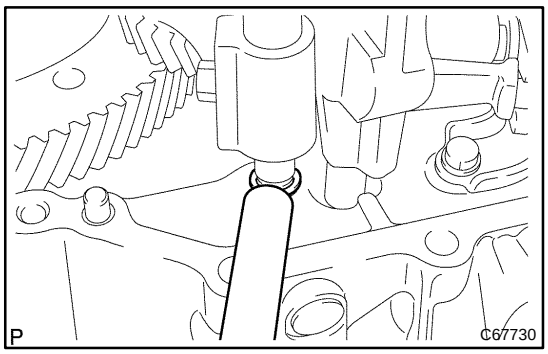

(c) Using a brass bar and a hammer, install shaft snap ring.

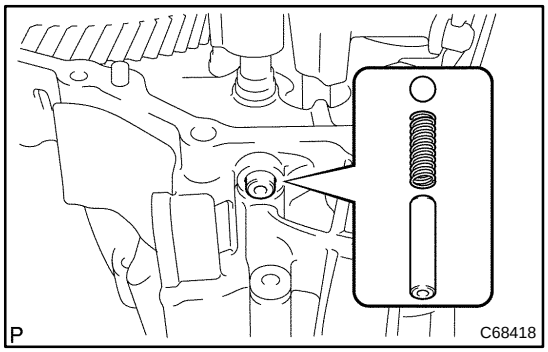

84. INSTALL 1ST GEAR THRUST WASHER PIN OR BALL

(a) Install the shift detent ball, shift detent ball compression spring and shift detent ball spring seat to the transaxle case.

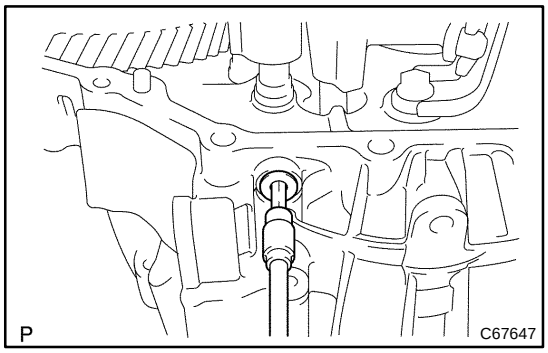

(b) Coat the shift detent ball plug with sealant, using SST, install it to the transaxle case.

Sealant:
Part No.08833–00080, THREE BOND 1344, LOCTITE 242 or equivalent
Torque: 24.5 N·m (250 kgf·cm, 18 ft·lbf)

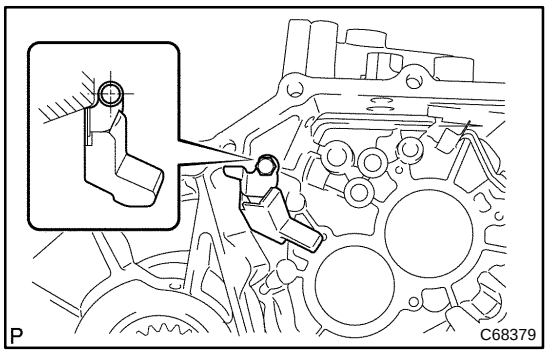

85. INSTALL OIL RECEIVER PIPE NO.2 (MTM)

(a) Install the oil receiver pipe No.2 (MTM) with bolt to the manual transmission case.

Torque: 17.2 N·m (175 kgf·cm, 13 ft·lbf)

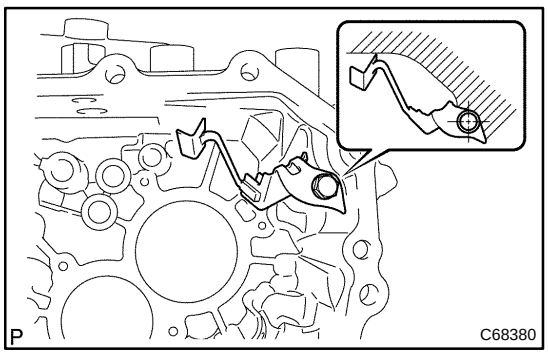

86. INSTALL OIL RECEIVER PIPE NO.1 (MTM)

(a) Install the oil receiver pipe No.1 (MTM) with bolt to the manual transmission case.

Torque: 17.2 N·m (175 kgf·cm, 13 ft·lbf)

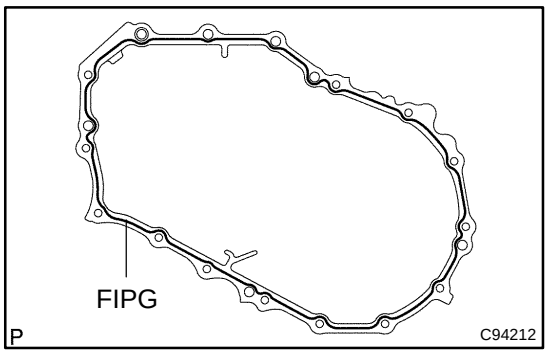

87. INSTALL MANUAL TRANSMISSION CASE

(a) Apply FIPG to the manual transmission case, as shown to the illustration.
FIPG:
Part No.08826–00090, THREE BOND 1281 or equivalent

NOTICE:
Parts must be assembled within 10 minutes of application. Otherwise, the packing (FIPG) material must be remove and reapplied.

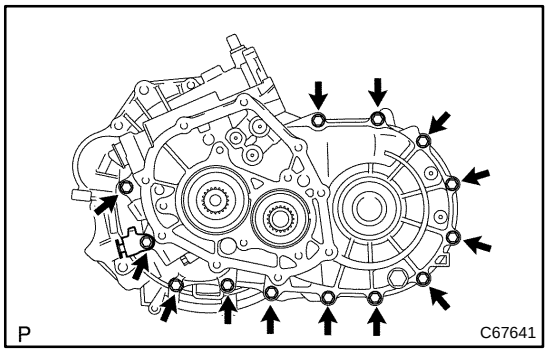

(b) Install the 13 bolts to the manual transmission side.
Torque: 29.4 N·m (300 kgf·cm, 22 ft·lbf)

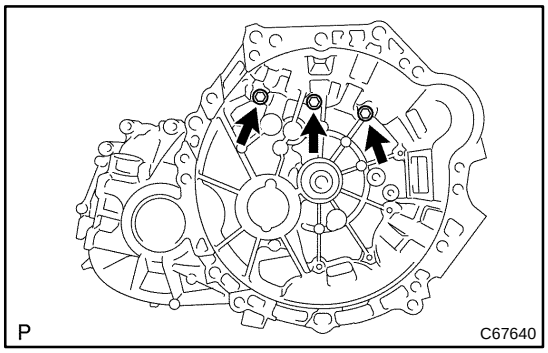

(c) Install the 3 bolts to the transaxle case side.
Torque: 29.4 N·m (300 kgf·cm, 22 ft·lbf)

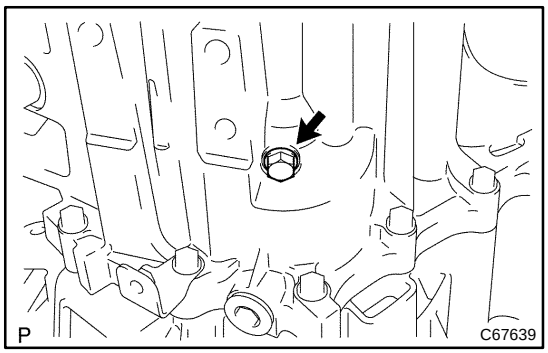

88. INSTALL REVERSE IDLER GEAR SHAFT BOLT

(a) Coat the reverse idler gear shaft bolt with sealant, install it with new gasket to the manual transmission case.
Sealant:
Part No.08833–00080, THREE BOND 1344, LOCTITE 242 or equivalent
Torque: 29.4 N·m (300 kgf·cm, 22 ft·lbf)

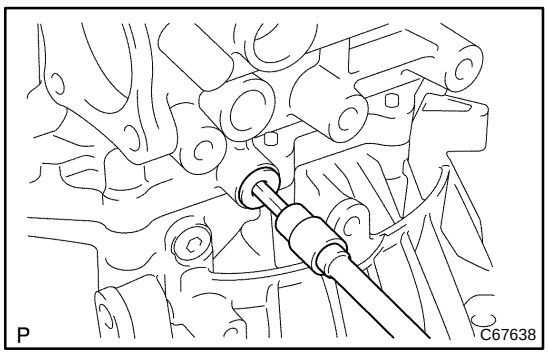

89. INSTALL MANUAL TRANSMISSION CASE PLUG

(a) Coat the transmission case plug with sealant, using socket hexagon wrench 6, install it to the manual transmission case.
Sealant:
Part No.08833–00080, THREE BOND 1344, LOCTITE 242 or equivalent
Torque: 39.2 N·m (400 kgf·cm, 29 ft·lbf)

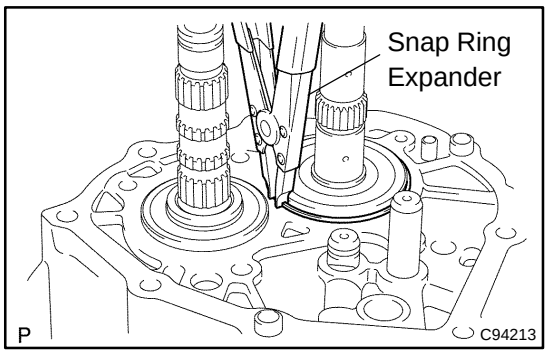

90. INSTALL INPUT SHAFT REAR BEARING HOLE SNAP RING

(a) Using a snap ring expander, install the input shaft rear bearing hole snap ring to the input shaft.

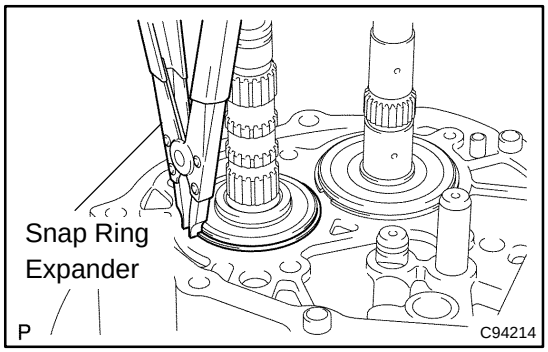

91. INSTALL OUTPUT SHAFT REAR BEARING HOLE SNAP RING

(a) Using a snap ring expander, install the output shaft rear bearing hole snap ring to the output shaft.

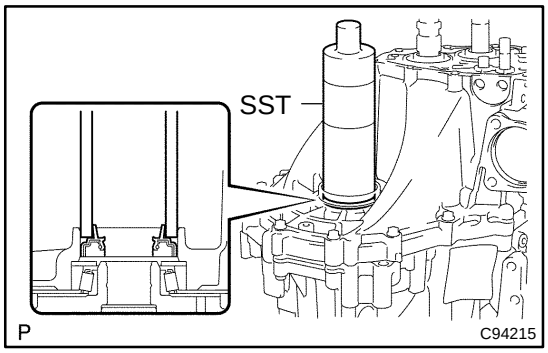

92. INSTALL TRANSMISSION CASE OIL SEAL

(a) Using SST and a hammer, install the transmission case oil seal to the manual transmission case.
SST 09316–60011 (09316–00011)
Driven in depth: 9.9 ± 0.3 mm (0.390 – 0.012 in.)

(b) Coat the lip of the transmission case oil seal with MP grease.

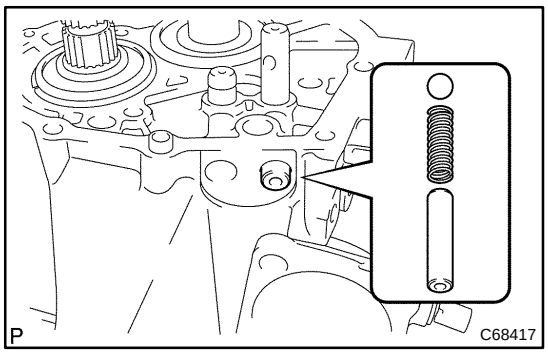

93. INSTALL SHIFT DETENT BALL

(a) Install the 2 shift detent balls, 2 shift detent ball springs and 2 shift detent ball spring seats to the manual transmission case.

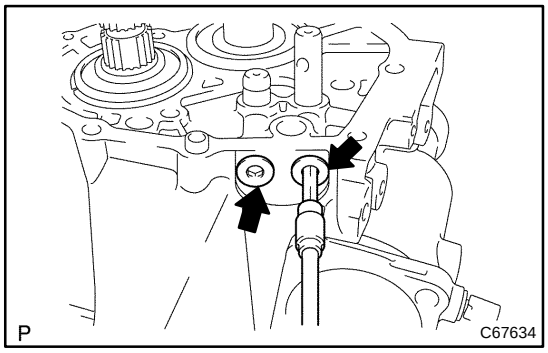

(b) Coat the 2 shift detent ball plugs with sealant, install it to the manual transmission case.
Sealant:
Part No.08833–00080, THREE BOND 1344, LOCTITE 242 or equivalent
Torque: 24.5 N·m (250 kgf·cm, 18 ft·lbf)

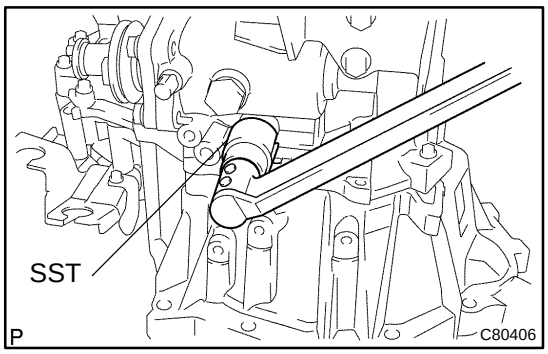

94. INSTALL BACK UP LAMP SWITCH ASSY

(a) Using SST, install the back up lamp switch assy with a new gasket to the manual transmission case.
SST 09817–16011
Torque: 40.2 N·m (411 kgf·cm, 30 ft·lbf)

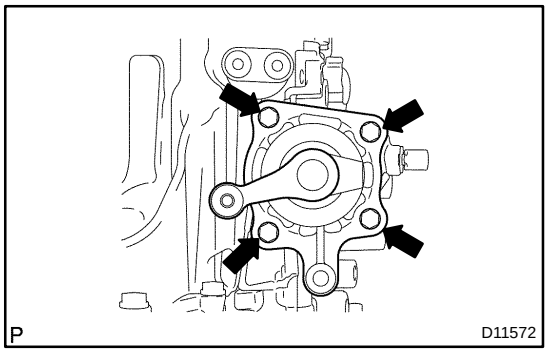

95. INSTALL SHIFT & SELECT LEVER SHAFT ASSY

(a) Coat the shift & select lever shaft assy with gear oil.
(b) Coat the 4 bolts with sealant, install them with new gasket and shift & select lever shaft assy.
Sealant:
Part No.08833–00080, THREE BOND 1344, LOCTITE 242 or equivalent
Torque: 19.6 N·m (200 kgf·cm, 14 ft·lbf)

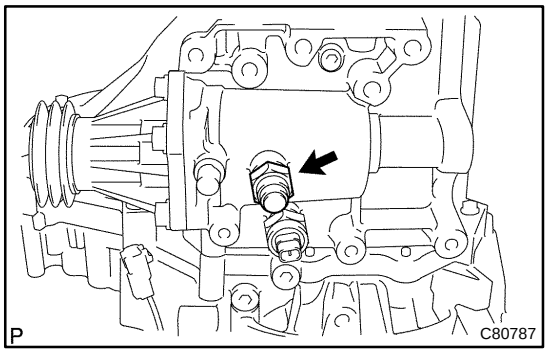

96. INSTALL LOCK BALL ASSY NO.1

(a) Coat the lock ball assy No.1 with sealant, install it to the manual transmission case.
Torque: 29.4 N·m (300 kgf·cm, 22 ft·lbf)

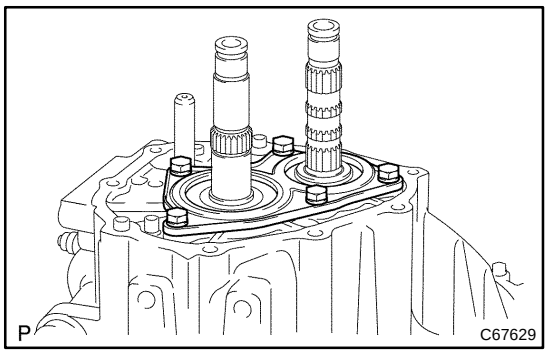

97. INSTALL BEARING RETAINER REAR (MTM)

(a) Coat the 5 bolts with sealant, install it with bearing retainer rear to the manual transmission case.
Sealant:
Part No.08833–00080, THREE BOND 1344, LOCTITE 242 or equivalent
Torque: 27.4 N·m (279 kgf·cm, 20 ft·lbf)

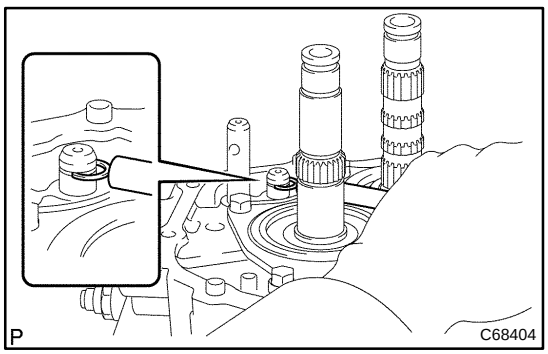

98. INSTALL SHIFT FORK SHAFT SHAFT SNAP RING

(a) Using a brass bar and a hammer, install the shift fork shaft snap ring to the shift fork shaft No.2.

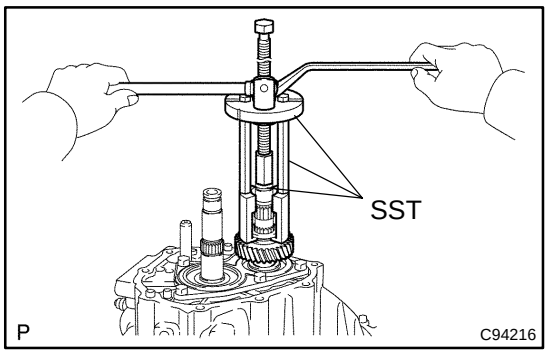

99. INSTALL 5TH DRIVEN GEAR

(a) Using SST, install the 5th driven gear to the output shaft.
SST 09950–30012 (09951–03010, 09953–03010, 09954–03010, 09955–03011, 09956–03080)

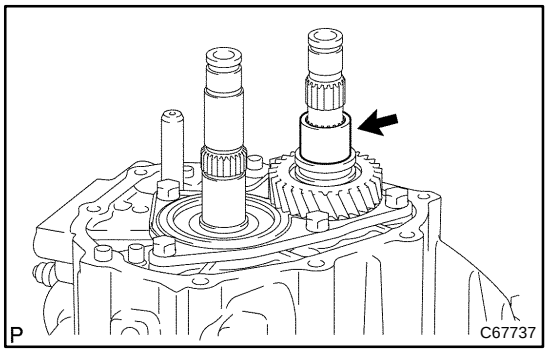

100. INSTALL OUTPUT GEAR SPACER

(a) Install the output gear spacer to the output shaft.

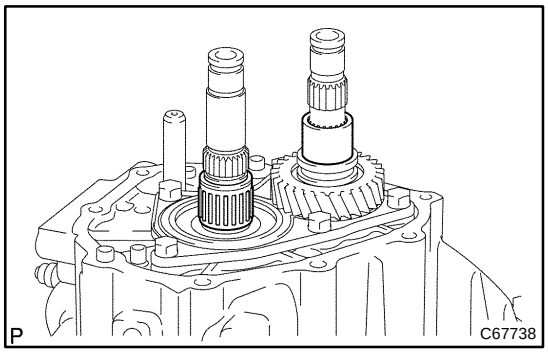

101. INSTALL 5TH GEAR NEEDLE ROLLER BEARING

(a) Coat the 2 5th gear bearing spacers, and 5th gear needle roller bearing with gear oil, install them to the input shaft.

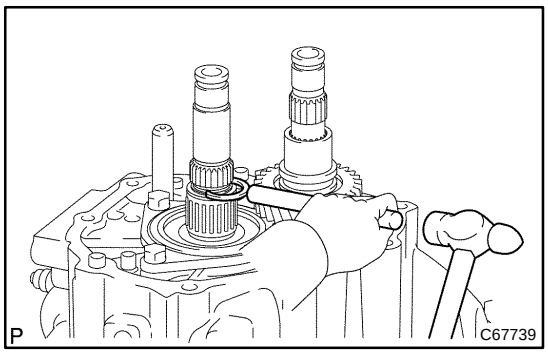

(b) Using a brass bar and a hammer, install the transmission clutch hub No.3 shaft snap ring to the input shaft.

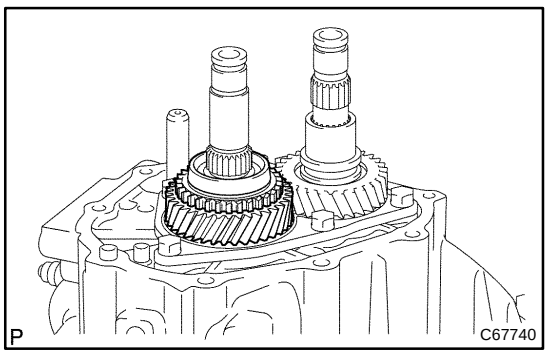

102. INSTALL 5TH GEAR

(a) Coat the 5th gear with gear oil, install it to the input shaft.

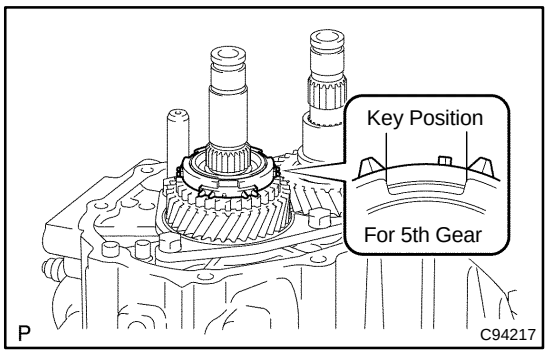

103. INSTALL SYNCHRONIZER RING NO.3 (FOR 5TH GEAR MT)

(a) Coat the synchronizer ring No.3 with gear oil, install it to the 5th gear.

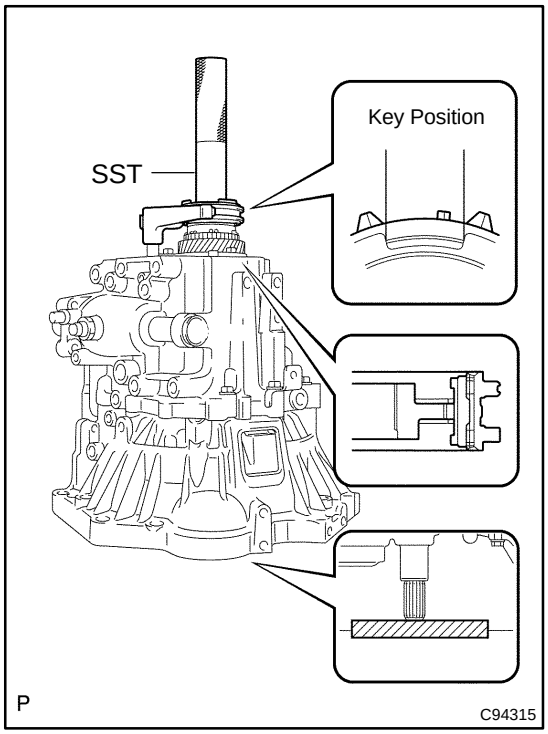

104. INSTALL TRANSMISSION CLUTCH HUB NO.3

(a) Using SST and a hammer, install the transmission clutch hub No.3 with gear shift fork No.3 to the input shaft.
SST 09608–04031

NOTICE:

- **Before driving in the transmission clutch hub No.3, place the suitable sized wooden block on the rear side of the input shaft, as shown in the illustration.**
- **When driving it in, fix the input shaft rear bearing is over loaded, it might be damaged.**

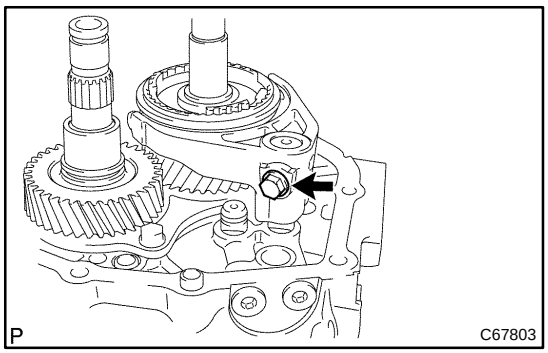

(b) Coat the shift fork lock bolt with sealant, install it to the gear shift fork No.3.
Torque: 15.7 N·m (160 kgf·cm, 12 ft·lbf)

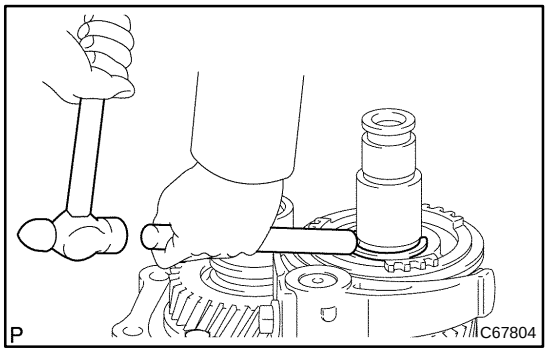

(c) Select a snap ring that will minimum axial play.
Clearance: 0.1 mm (0.004 in.) or less

Snap ring thickness:

Part No.	Thickness: mm (in.)	Mark
90520–20074	1.75 (0.0689)	A
90520–20075	1.80 (0.0709)	B
90520–20076	1.85 (0.0728)	C
90520–20077	1.90 (0.0748)	D
90520–20078	1.95 (0.0768)	E
90520–20079	2.00 (0.0787)	F

Part No.	Thickness: mm (in.)	Mark
90520–20080	2.05 (0.0807)	G
90520–20081	2.10 (0.0827)	H
90520–20082	2.15 (0.0846)	J

(d) Using a brass bar and a hammer, install the snap ring to the input shaft.

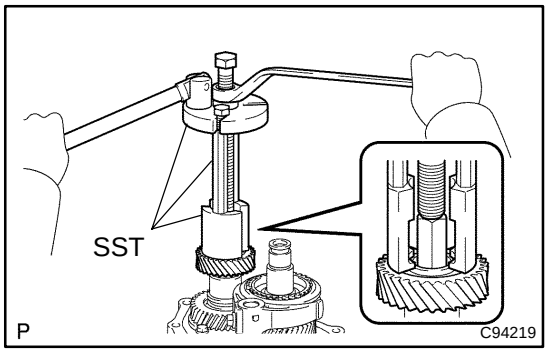

105. INSTALL COUNTER GEAR 6TH

(a) Using SST, install the counter gear to the output shaft.
SST 09950–30012 (09951–03010, 09953–03010, 09954–03010, 09955–03011, 09956–03080)

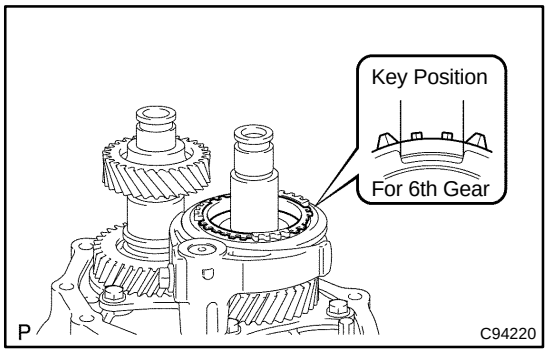

106. INSTALL SYNCHRONIZER RING NO.3 (FOR 6TH GEAR MT)

(a) Coat the synchronizer ring No.3 with gear oil, install it to the transmission clutch hub No.3.

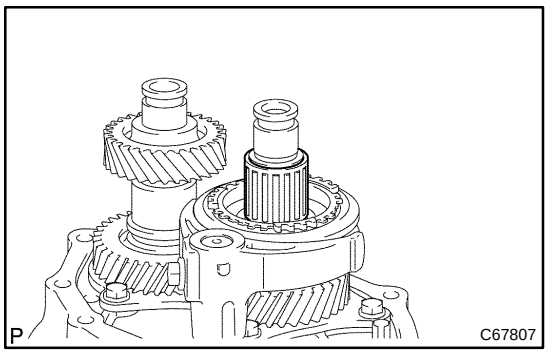

107. INSTALL 6TH GEAR NEEDLE ROLLER BEARING

(a) Coat the 6th gear needle roller bearing with gear oil, install it to the input shaft.

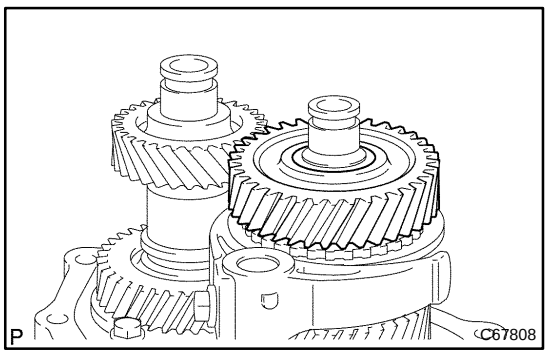

108. INSTALL 6TH GEAR SUB–ASSY

(a) Coat the 6th gear sub–assy with gear oil, install it to the input shaft.

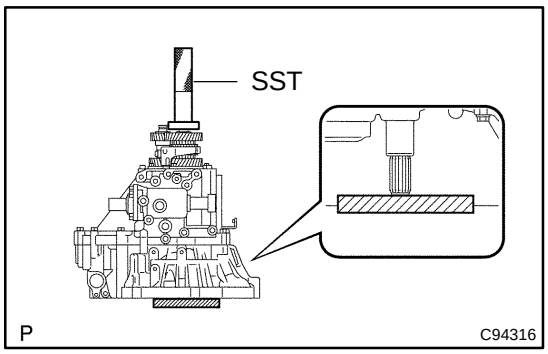

109. INSTALL INPUT SHAFT REAR RADIAL BALL BEARING

(a) Using SST, steel block and a hammer, install the input shaft rear radial ball bearing to the input shaft.
SST 09608–04031

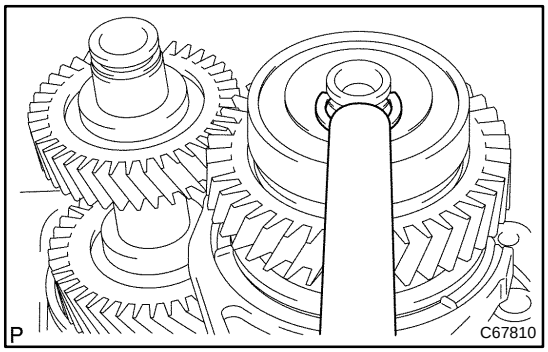

(b) Select a snap ring that will minimum axial play.
Clearance: 0.1 mm (0.004 in.) or less

Snap ring thickness:

Part No.	Thickness: mm (in.)	Mark
90520–17006	1.70 (0.0669)	A
90520–17007	1.75 (0.0689)	B
90520–17008	1.80 (0.0709)	C
90520–17009	1.85 (0.0728)	D
90520–17010	1.90 (0.0748)	E
90520–17011	1.95 (0.0768)	F
90520–17012	2.00 (0.0787)	G
90520–17013	2.05 (0.0807)	H
90520–17014	2.10 (0.0827)	J
90520–17015	2.15 (0.0846)	K
90520–17016	2.20 (0.0866)	L
90520–17017	2.25 (0.0886)	M

(c) Using a brass bar and hammer, install the snap ring to the input shaft.

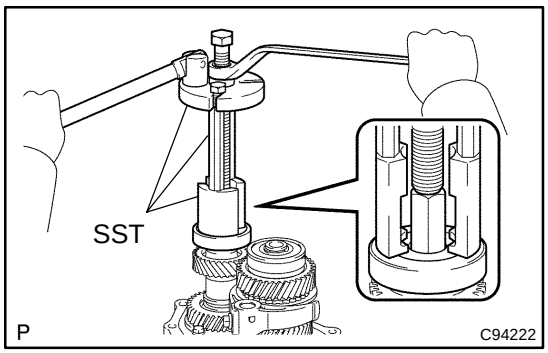

110. INSTALL OUTPUT SHAFT REAR BEARING

(a) Using SST, install output shaft rear bearing to the output shaft.
SST 09950–30012 (09951–03010, 09953–03010, 09954–03010, 09955–03011, 09956–03080)

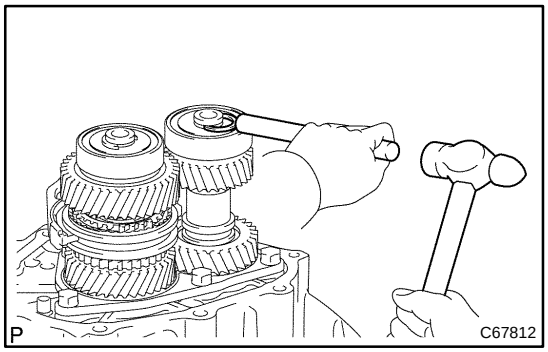

(b) Select a snap ring that will minimum axial play.
Clearance: 0.1 mm (0.004 in.) or less

Snap ring thickness:

Part No.	Thickness: mm (in.)	Mark
90520–18003	2.31 (0.0909)	B
90520–18004	2.37 (0.0933)	C
90520–18006	2.43 (0.0957)	D
90520–18007	2.49 (0.0980)	E
90520–18008	2.55 (0.1004)	F
90520–18009	2.61 (0.1028)	G

Part No.	Thickness: mm (in.)	Mark
90520–18013	2.67 (0.1051)	H
90520–18011	2.73 (0.1075)	J
90520–18014	2.79 (0.1098)	K
90520–18015	2.85 (0.1122)	L
90520–18016	2.91 (0.1146)	M

(c) Using a brass bar and hammer, install the snap ring to the output shaft.

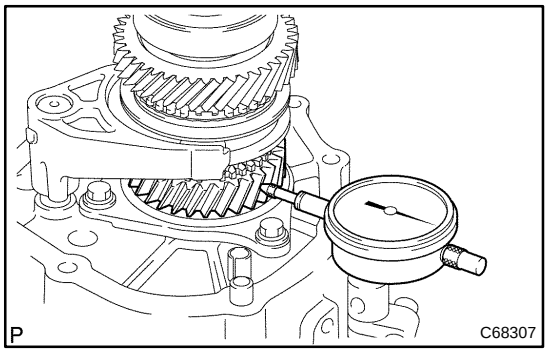

111. INSPECT 5TH GEAR RADIAL CLEARANCE

(a) Using a dial indicator, measure the 5th gear radial clearance.

Standard clearance:

0.015 – 0.056 mm (0.0006 – 0.0022 in.)

If the clearance is out of specification, replace the 5th gear needle roller bearing.

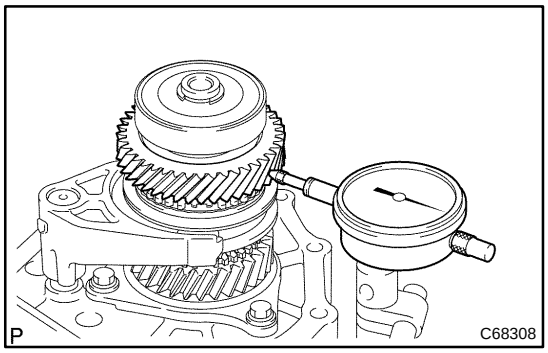

112. INSPECT 6TH GEAR RADIAL CLEARANCE

(a) Using a dial indicator, measure the 6th gear radial clearance.

Standard clearance:

0.009 – 0.050 mm (0.0004 – 0.0020 in.)

If the clearance is out of specification, replace the 6th gear needle roller bearing.

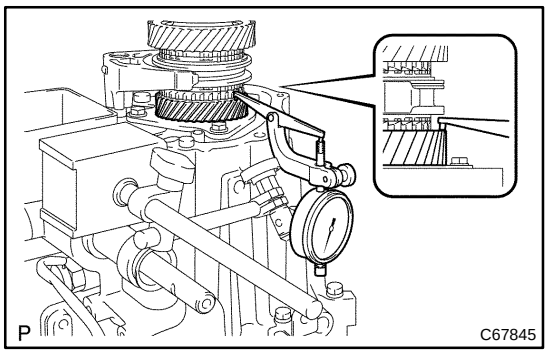

113. INSPECT 5TH GEAR THRUST CLEARANCE

(a) Using a dial indicator, measure the 5the gear thrust clearance.

Standard clearance:

0.10 – 0.62 mm (0.0039 – 0.0244 in.)

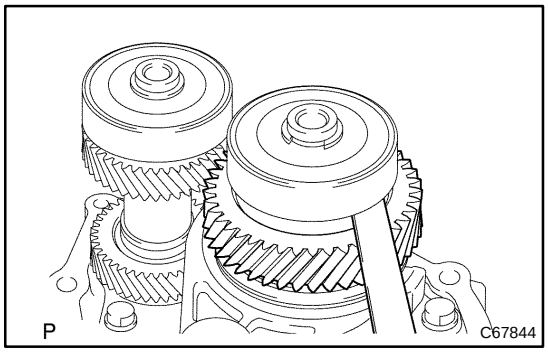

114. INSPECT 6TH GEAR THRUST CLEARANCE

(a) Using a feeler gauge, measure the 6th gear thrust clearance.

Standard clearance:

0.10 – 0.60 mm (0.0039 – 0.0236 in.)

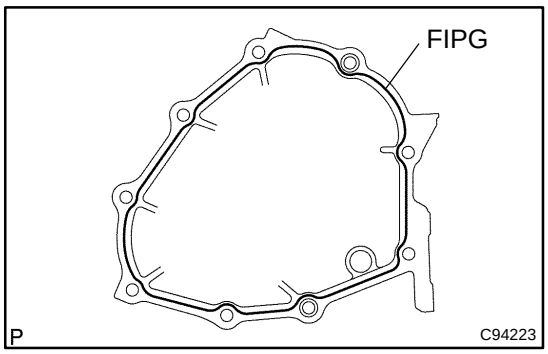

115. INSTALL MANUAL TRANSMISSION CASE COVER SUB–ASSY

(a) Apply FIPG to the manual transmission case cover sub–assy.
FIPG:
Parts No.08826–00090, THREE BOND 1281 or equivalent

NOTICE:
Parts must be assembled within 10 minutes of application. Other wise, the pack the packing (FIPG) material must be remove and reapplied.

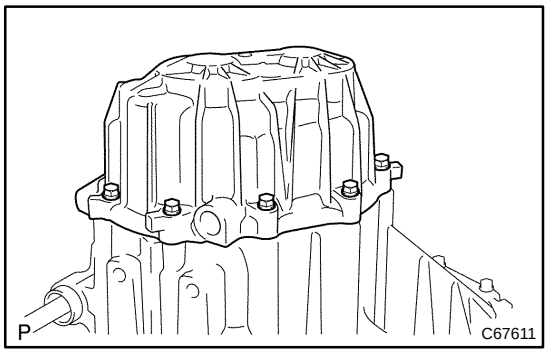

(b) Install the manual transmission case cover sub–assy with 9 bolts to the manual transmission case.
Torque: 18.1 N·m (185 kgf·cm, 13 ft·lbf)

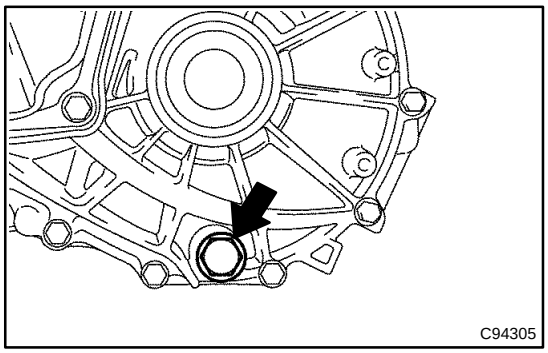

116. INSTALL DRAIN (MTM) PLUG SUB–ASSY

(a) Install the drain (MTM) plug sub–assy with a new gasket to the manual transmission case.
Torque: 39.2 N·m (400 kgf·cm, 29 ft·lbf)

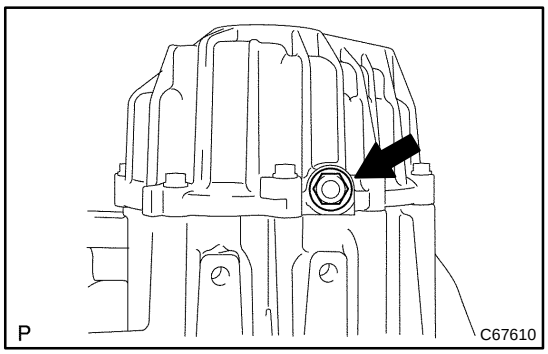

117. INSTALL MANUAL TRANSMISSION FILLER PLUG

(a) Install the manual transmission filler plug with a new gasket to the manual transmission case cover.
Torque: 39.2 N·m (400 kgf·cm, 29 ft·lbf)

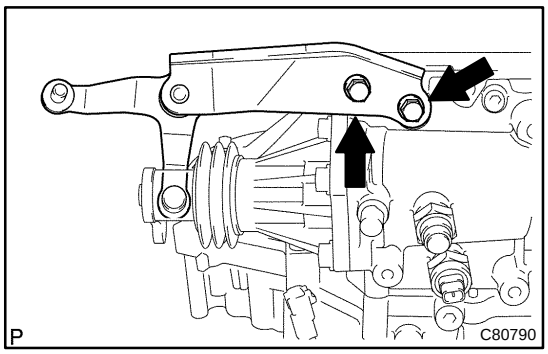

118. INSTALL SELECTING BELL CRANK ASSY

(a) Install the selecting bellcrank assy with 2 bolts to the manual transmission case.
Torque: 24.5 N·m (250 kgf·cm, 18 ft·lbf)

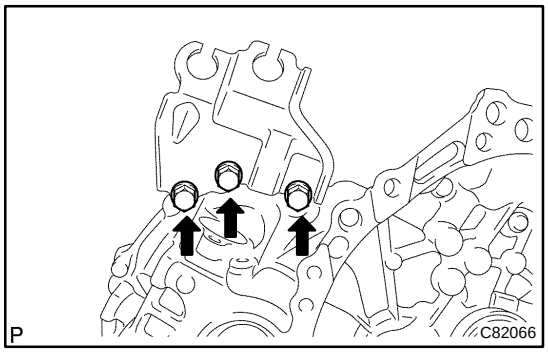

119. INSTALL FLOOR SHIFT CONTROL LEVER HOUSING SUPPORT BRACKET

(a) Install the floor shift control lever housing support bracket with 3 bolts to the transaxle case.
Torque: 11.3 N·m (115 kgf·cm, 8 ft·lbf)

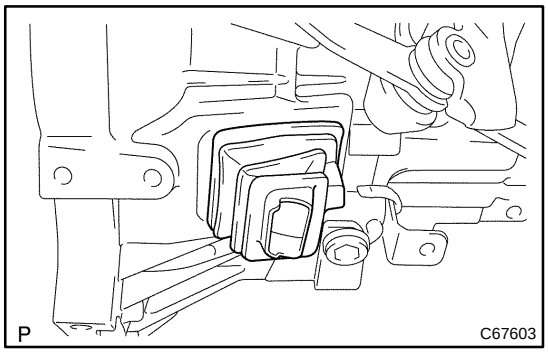

120. INSTALL CLUTCH RELEASE FORK BOOT

(a) Install clutch release fork boot to the transaxle case.

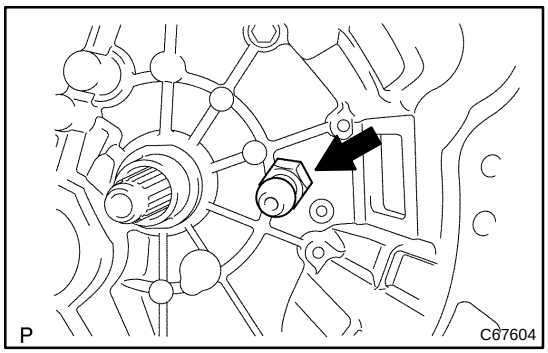

121. INSTALL RELEASE FORK SUPPORT

(a) Install the release fork support to the transaxle case.
Torque: 36.8 N·m (375 kgf·cm, 27 ft·lbf)

(b) Coat the release fork support with release hub grease.
Release hub grease:
Part No.08887–01806, RELEASE HUB GREASE or equivalent

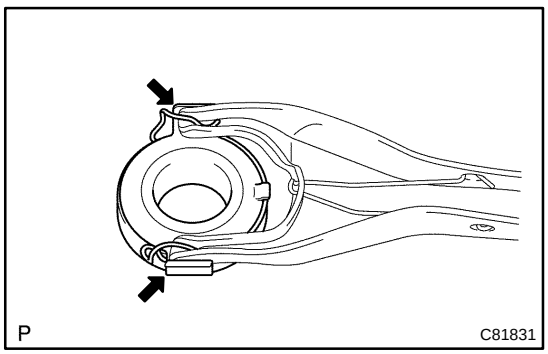

122. INSTALL CLUTCH RELEASE BEARING ASSY

(a) Coat the clutch release bearing assy with release hub grease, install it to the clutch release fork sub–assy.
Release hub grease:
Part No.08887–01806, RELEASE HUB GREASE or equivalent

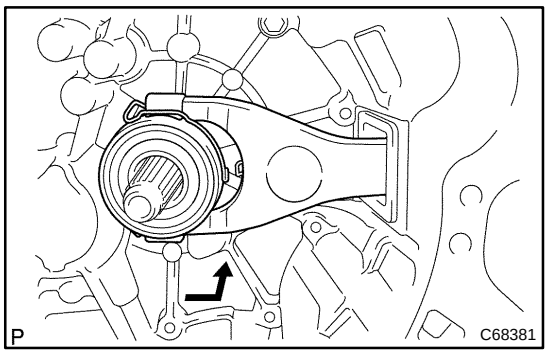

123. INSTALL CLUTCH RELEASE FORK SUB–ASSY

(a) Apply clutch spline grease to the input shaft spline.
Clutch spline grease:
Part No.08887–01806, CLUTCH SPLINE GREASE or equivalent

(b) Install the clutch release fork sub–assy to the input shaft.

124. INSTALL SPEEDOMETER DRIVEN HOLE COVER SUB–ASSY

(a) Install a new O–ring to the speedometer driven hole cover sub–assy.

(b) Install the speedometer driven hole cover sub–assy with bolt to the transaxle case.
Torque: 11.3 N·m (115 kgf·cm, 8 ft·lbf)

INPUT SHAFT ASSY (C60)

COMPONENTS

41084–01

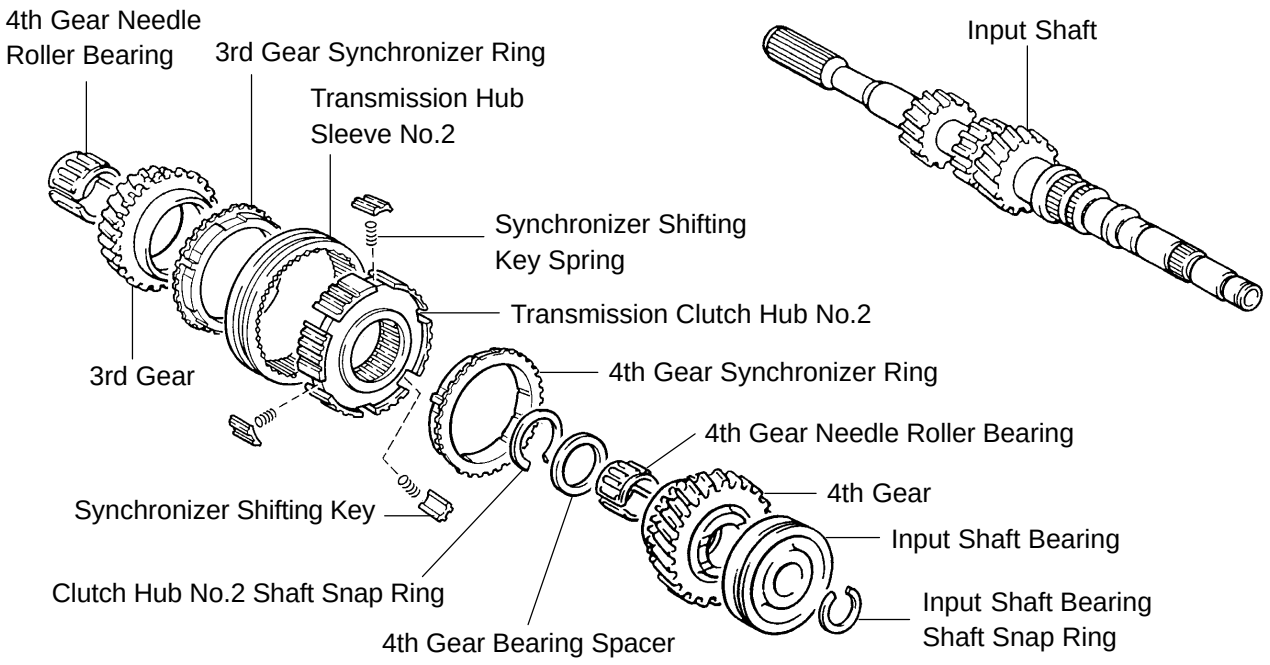

D00326

41085–01

OVERHAUL

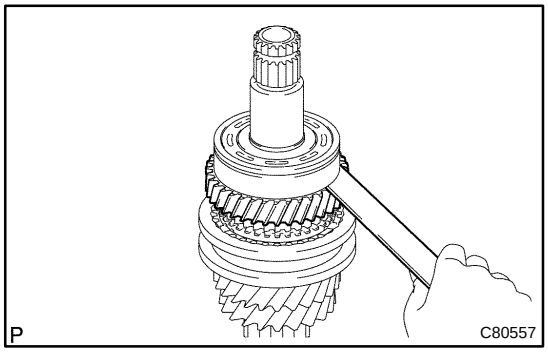

1. INSPECT 4TH GEAR THRUST CLEARANCE

(a) Using a feeler gauge, measure the 4th gear thrust clearance.

Standard clearance:
0.10 – 0.55 mm (0.0039 – 0.0217 in.)

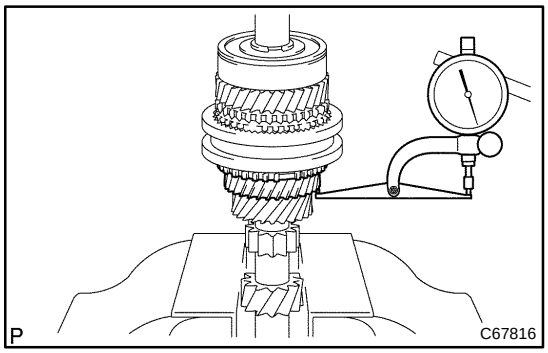

2. INSPECT 3RD GEAR THRUST CLEARANCE

(a) Using a dial indicator, measure the 3rd gear thrust clearance.

Standard clearance:
0.10 – 0.35 mm (0.0039 – 0.0138 in.)

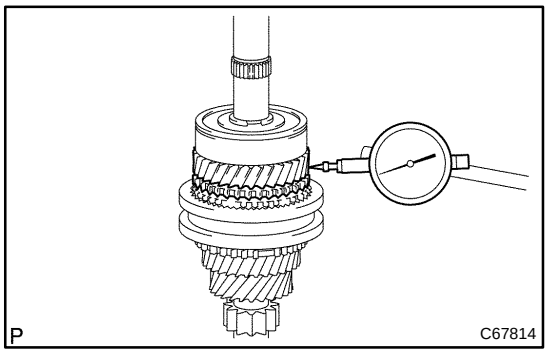

3. INSPECT 4TH GEAR RADIAL CLEARANCE

(a) Using a dial indicator, measure the 4th gear radial clearance.

Standard clearance:

Bearing	Clearance: mm (in.)
KOYO made	0.015 – 0.058 (0.0006 – 0.0023)
NSK made	0.015 – 0.056 (0.0006 – 0.0022)

If the clearance is out of specification, replace the 4th gear needle roller bearing.

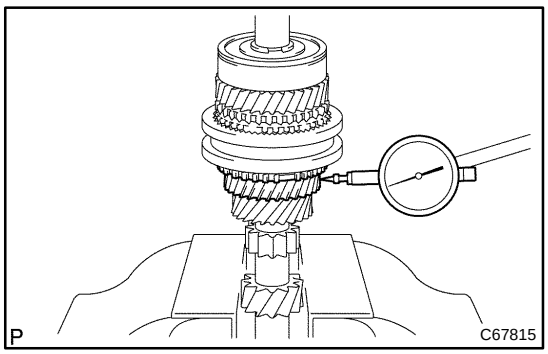

4. INSPECT 3RD GEAR RADIAL CLEARANCE

(a) Using a dial indicator, measure the 3rd gear radial clearance.

Standard clearance:

Bearing	Clearance: mm (in.)
KOYO made	0.015 – 0.058 (0.0006 – 0.0023)
NSK made	0.015 – 0.056 (0.0006 – 0.0022)

If the clearance is out of specification, replace the 3rd gear needle roller bearing.

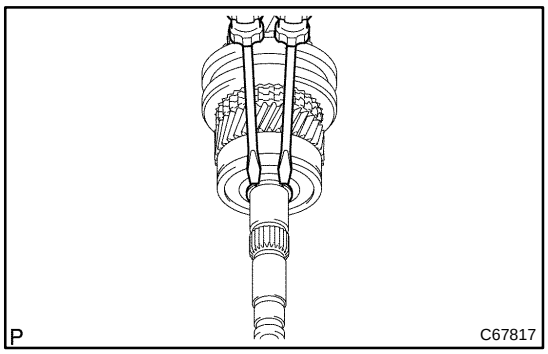

5. REMOVE 4TH GEAR

(a) Using 2 screwdrivers and a hammer, remove the input shaft bearing shaft snap ring.

NOTICE:

Using a waste to prevent the snap ring from the being scattered.

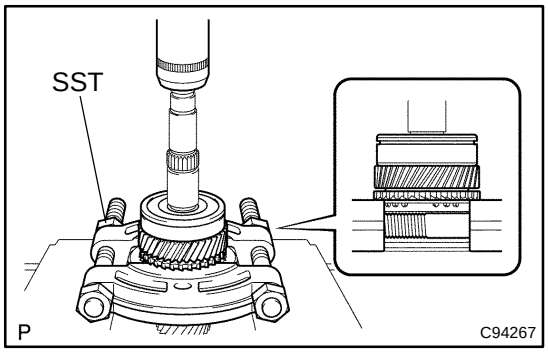

(b) Using SST and a press, remove the input shaft bearing with 4th gear from the input shaft.

SST 09950–00020

NOTICE:

Do not tighten SST excessively.

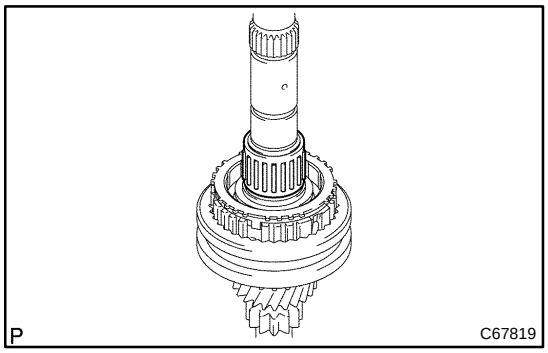

6. REMOVE 4TH GEAR NEEDLE ROLLER BEARING

(a) Remove the 4th gear needle roller bearing and 4th gear bearing spacer from the input shaft.

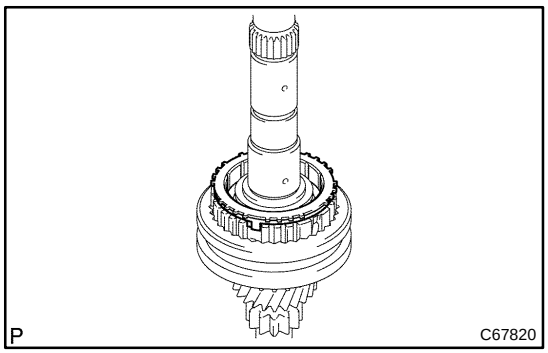

7. REMOVE 4TH GEAR SYNCHRONIZER RING

(a) Remove the 4th gear synchronizer ring from the transmission clutch hub No.2.

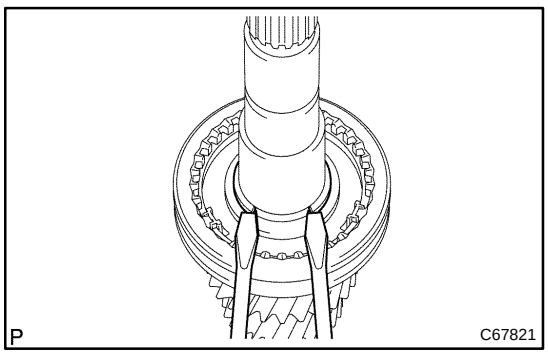

8. REMOVE 3RD GEAR

(a) Using 2 screwdrivers and a hammer, remove the clutch hub No.2 shaft snap ring from the input shaft.

NOTICE:

Using a waste to prevent the snap ring from the being scattered.

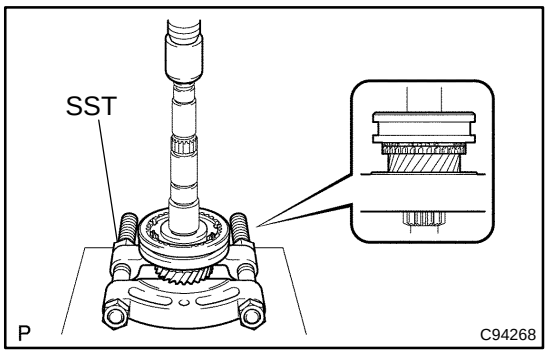

(b) Using SST and a press, remove the transmission clutch hub No.2 with 3rd gear from the input shaft.
SST 09950–00020

NOTICE:
Do not tighten SST excessively.

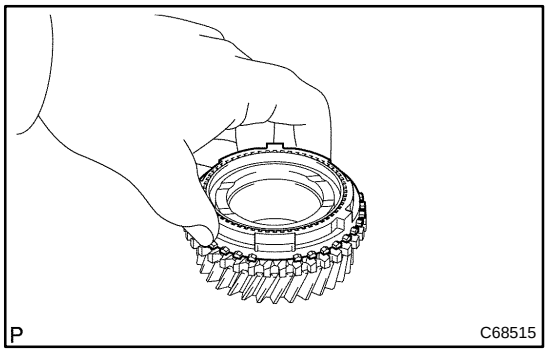

9. REMOVE 3RD GEAR SYNCHRONIZER RING

(a) Remove the 3rd gear synchronizer ring from the 3rd gear.

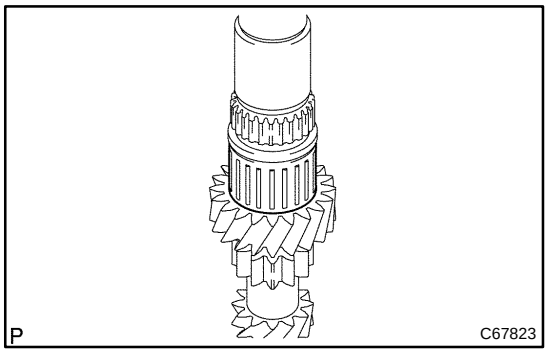

10. REMOVE 3RD GEAR NEEDLE ROLLER BEARING

(a) Remove the 3rd gear needle roller bearing from the input shaft.

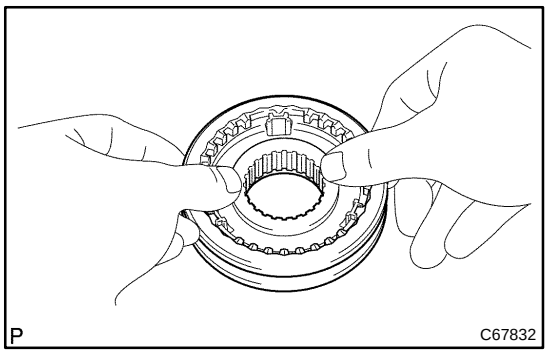

11. REMOVE TRANSMISSION HUB SLEEVE NO.2

(a) Remove the transmission hub sleeve No.2, 3 synchromesh shifting keys and 3 transmission shifting key springs from the transmission clutch hub No.2.

NOTICE:
Using a waste to prevent the synchromesh shifting key and spring from the being scattered.

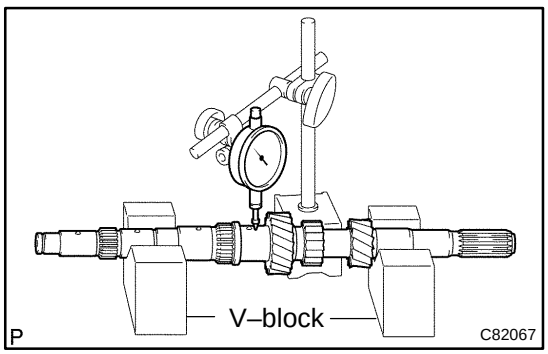

12. INSPECT INPUT SHAFT

(a) Using a dial indicator and 2 V–blocks, measure the shaft runout.
Maximum runout: 0.015 mm (0.006 in.)

If the run out is exceeds the maximum, replace the input shaft.

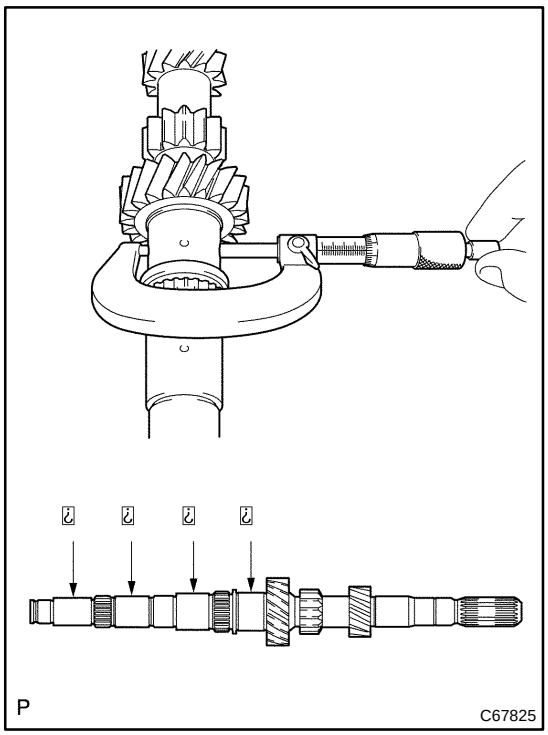

(b) Using a micrometer, measure the outer diameter of the input shaft jurnal surface.

Outer diameter:

Part	New shaft: mm (in.)	Minimum outer diameter: mm (in.)
A	21.991 – 21.006 (0.8658 – 0.8270)	21.991 (0.8658)
B	24.885 – 24.900 (0.9797 – 0.9803)	24.885 (0.9797)
C	28.985 – 29.000 (1.1411 – 1.1417)	28.985 (1.1411)
D	30.985 – 31.000 (1.2199 – 1.2205)	30.985 (1.2199)

If the outer diameter is less than the minimum, replace the input shaft.

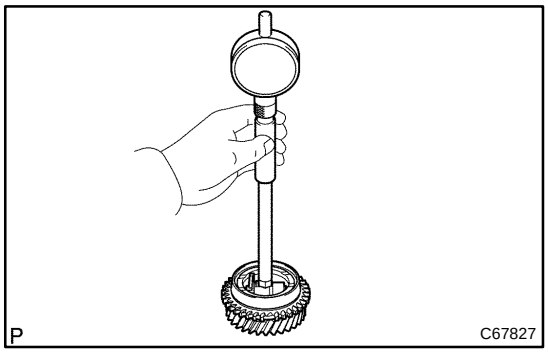

13. INSPECT 4TH GEAR

(a) Using a cylinder gauge, measure the inside diameter of the 4th gear.

Inside diameter:

New gear: mm (in.)	Maximum inside diameter: mm (in.)
34.015 – 34.031 (1.3392 – 1.3398)	34.031 (1.3398)

If the inside diameter is exceeds the maximum, replace the 4th gear.

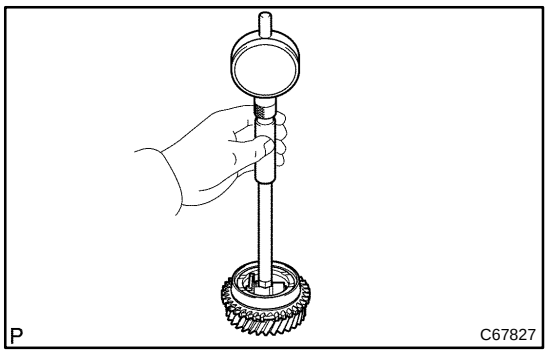

14. INSPECT 3RD GEAR

(a) Using a cylinder gauge, measure the inside diameter of the 3rd gear.

Inside diameter:

New gear: mm (in.)	Maximum inside diameter: mm (in.)
36.015 – 36.031 (1.4179 – 1.4185)	36.031 (1.4185)

If the inside diameter is exceeds the maximum, replace the 4th gear.

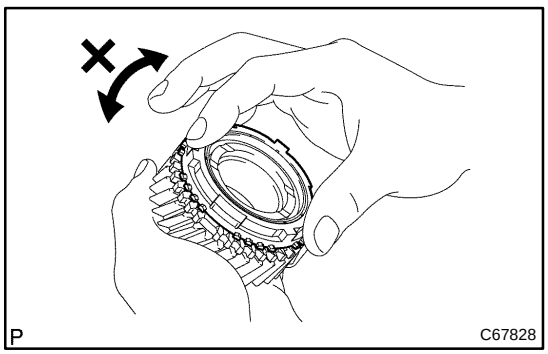

15. INSPECT 4TH GEAR SYNCHRONIZER RING

(a) Coat the 4th gear cone with gear oil. Check the braking effect of the 4th gear synchronizer ring.

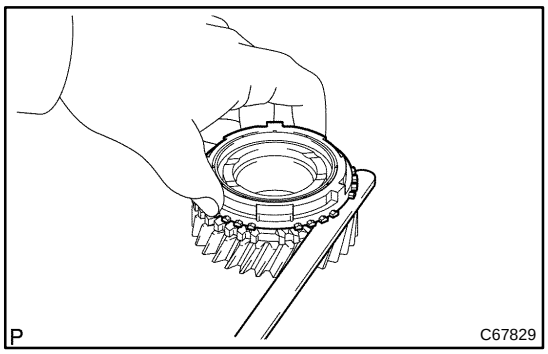

(b) Using a feeler gauge, measure the clearance between the 4th gear synchronizer ring back and 4th gear spline end.

Standard clearance:

0.75 – 1.65 mm (0.0295 – 0.0650 in.)

If the clearance is out of specification, replace the 4th gear synchronizer ring.

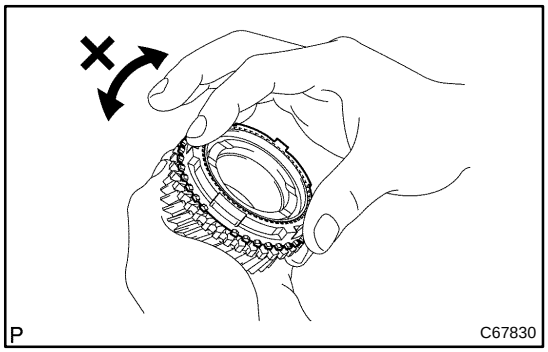

16. INSPECT 3RD GEAR SYNCHRONIZER RING

(a) Coat the 3rd gear cone with gear oil. Check the braking effect of the 3rd gear synchronizer ring.

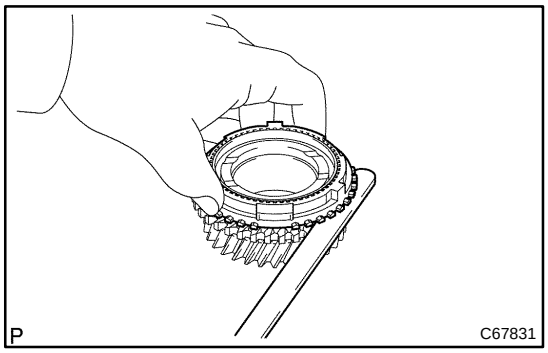

(b) Using a feeler gauge, measure the clearance between the 3rd gear synchronizer ring back and 3rd gear spline end.

Standard clearance:

0.65 – 1.75 mm (0.0256 – 0.0689 in.)

If the clearance is out of specification, replace the 3rd gear synchronizer ring.

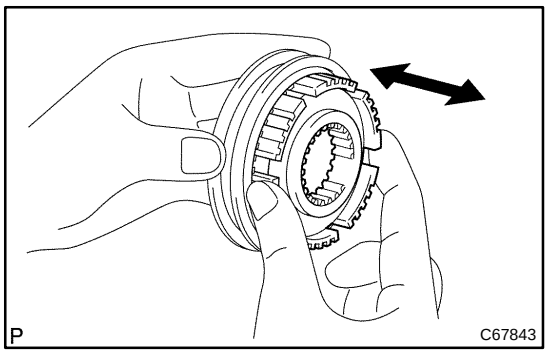

17. INSPECT TRANSMISSION HUB SLEEVE NO.2

(a) Check the sliding condition between the transmission hub No.2 and transmission hub sleeve No.2.

(b) Check that the spline gear's edges of the transmission hub sleeve No.2 is not worn down.

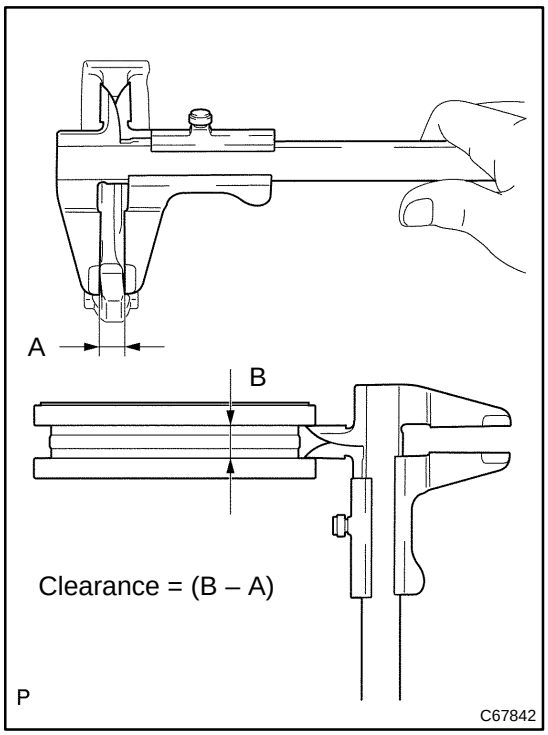

(c) Using a vernier calipers, inspect the transmission hub sleeve No.2 and gear shift fork No.2 as shown in the illustration.

Standard clearance:

0.15 – 0.35 mm (0.0059 – 0.0138 in.)

If the clearance is out of specification, replace the transmission hub sleeve No.2 and gear shift fork No.2.

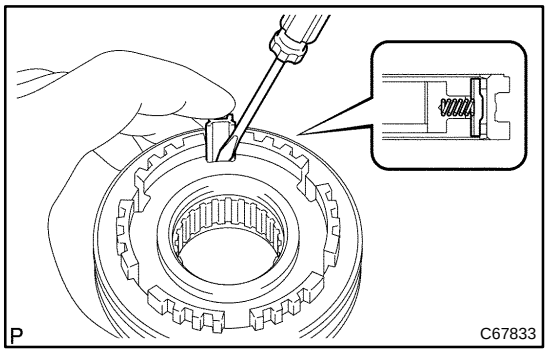

18. INSTALL TRANSMISSION HUB SLEEVE NO.2

(a) Coat the transmission hub sleeve No.2 with gear oil, install it to the transmission clutch hub No.2.

NOTICE:

Do not set the transmission hub sleeve No.2 and the transmission clutch hub No.2 in incorrect orientation.

(b) Using a screwdriver, install the 3 synchromesh shifting key springs with 3 synchromesh shifting keys.

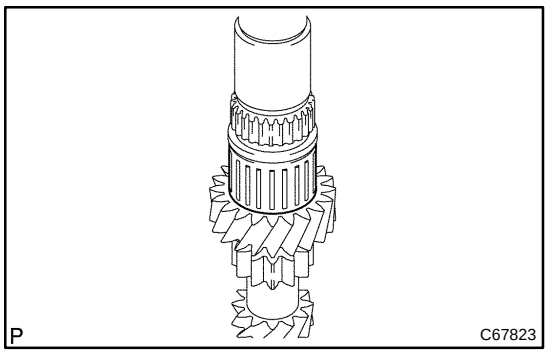

19. INSTALL 3RD GEAR NEEDLE ROLLER BEARING

(a) Coat the 3rd gear needle roller bearing with gear oil, install it to the input shaft.

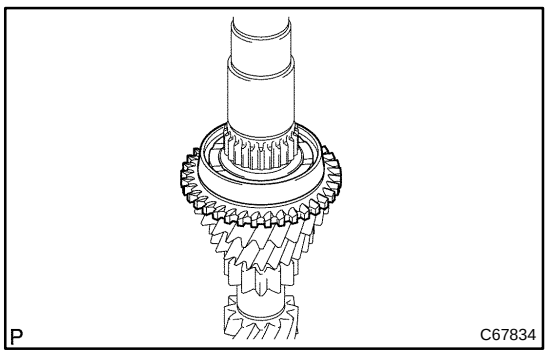

20. INSTALL 3RD GEAR

(a) Coat the 3rd gear with gear oil, install it to the input shaft.

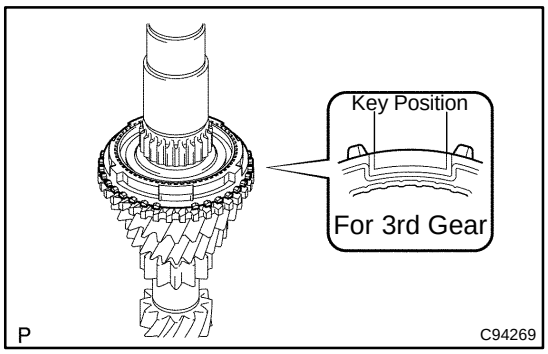

21. INSTALL 3RD GEAR SYNCHRONIZER RING

(a) Coat the 3rd gear synchronizer ring with gear oil, install it to the 3rd gear.

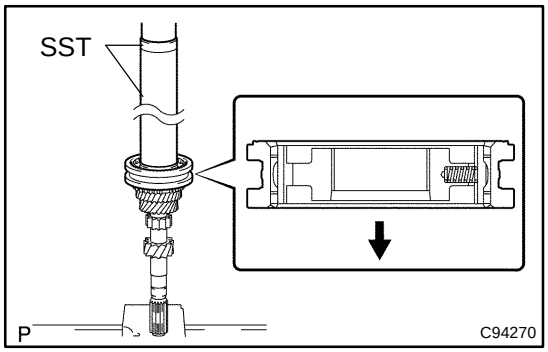

22. INSTALL TRANSMISSION CLUTCH HUB NO.2

(a) Using SST and a press, install the transmission clutch hub No.2 to the input shaft.

SST 09309–36100 (09309–03610), 09950–60010 (09951–00450)

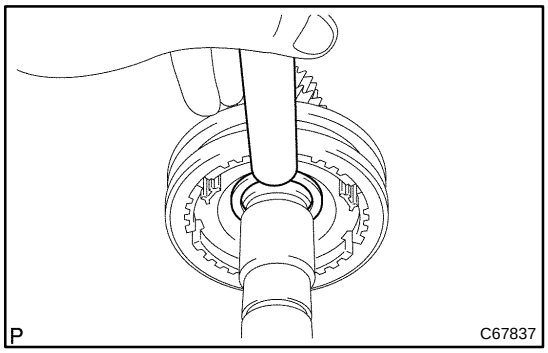

(b) Select a snap ring that will allow minimum axial play.

Standard clearance:

0.1 mm (0.004 in.) or less

Snap ring thickness:

Part No.	Thickness: mm (in.)	Mark
90520–27046	2.30 (0.0906)	0
90520–27047	2.36 (0.0929)	1
90520–27048	2.42 (0.0953)	2
90520–27049	2.48 (0.0976)	3
90520–27050	2.54 (0.1000)	4
90520–27051	2.60 (0.1024)	5

(c) Using a brass bar and a hammer, install the snap ring to the input shaft.

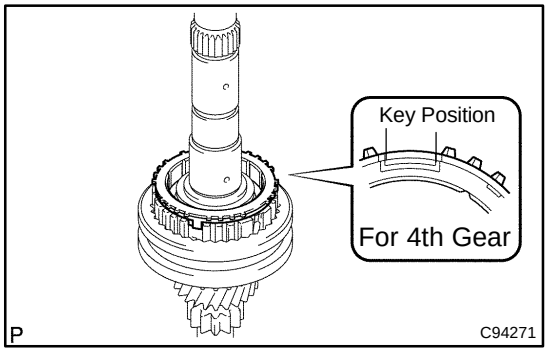

23. INSTALL 4TH GEAR SYNCHRONIZER RING

(a) Coat the 4th gear synchronizer ring with gear oil, install it to the transmission clutch hub No.2.

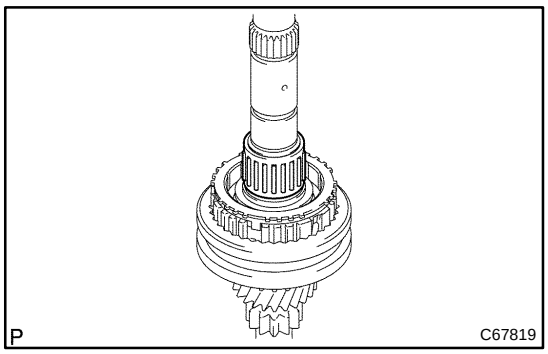

24. INSTALL 4TH GEAR NEEDLE ROLLER BEARING

(a) Coat the 4th gear bearing spacer and 4th gear needle roller bearing with gear oil, install them to the input shaft.

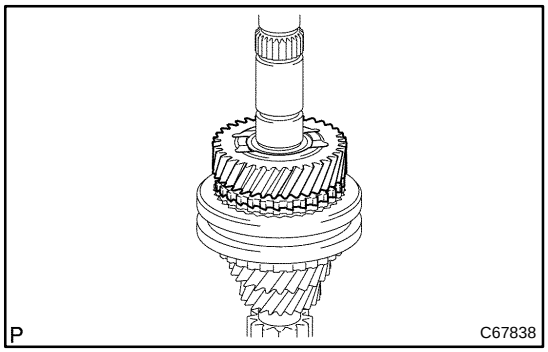

25. INSTALL 4TH GEAR

(a) Coat the 4th gear with gear oil, install it to the input shaft.

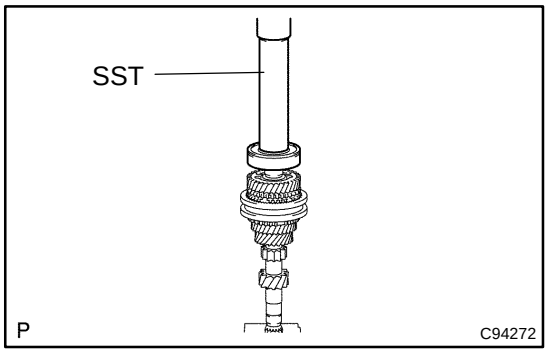

26. INSTALL INPUT SHAFT BEARING

(a) Using SST and a press, install the input shaft bearing to the input shaft.
SST 09608–04031

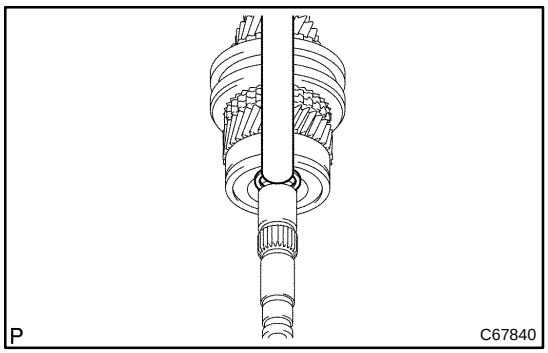

(b) Select a snap ring that will allow minimum axial play.
Standard clearance:
0.1 mm (0.004 in.) or less

Snap ring thickness:

Part No.	Thickness: mm (in.)	Mark
90520–22006	2.29 (0.0902)	A
90520–22007	2.35 (0.0925)	B
90520–22008	2.41 (0.0949)	C
90520–22009	2.47 (0.0972)	D
90520–22010	2.53 (0.0996)	E
90520–22011	2.59 (0.1020)	F

(c) Using a brass bar and a hammer, install the snap ring to the input shaft.

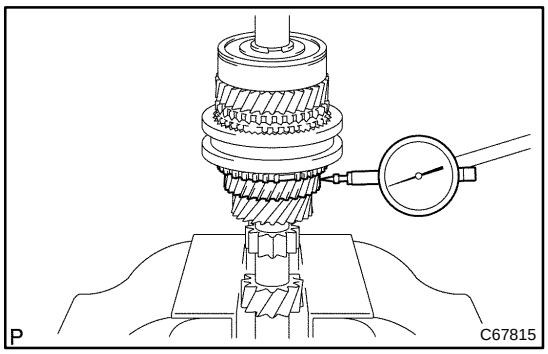

27. INSPECT 3RD GEAR RADIAL CLEARANCE

(a) Using a dial indicator, measure the 3rd gear radial clearance.

Standard clearance:

Bearing	Clearance: mm (in.)
KOYO made	0.015 – 0.058 (0.0006 – 0.0023)
NSK made	0.015 – 0.056 (0.0006 – 0.0022)

If the clearance is out of specification, replace the 3rd gear needle roller bearing.

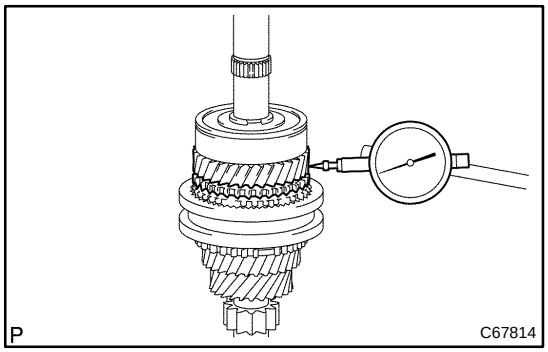

28. INSPECT 4TH GEAR RADIAL CLEARANCE

(a) Using a dial indicator, measure the 4th gear radial clearance.

Standard clearance:

Bearing	Clearance: mm (in.)
KOYO made	0.015 – 0.058 (0.0006 – 0.0023)
NSK made	0.015 – 0.056 (0.0006 – 0.0022)

If the clearance is out of specification, replace the 4th gear needle roller bearing.

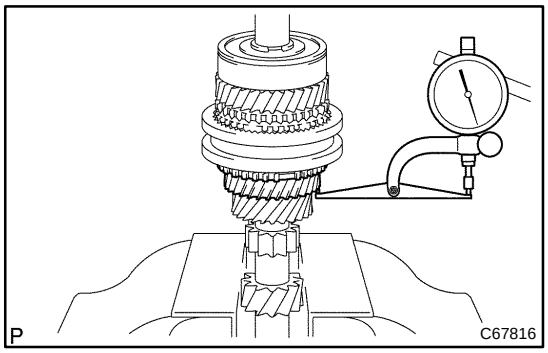

29. INSPECT 3RD GEAR THRUST CLEARANCE

(a) Using a dial indicator, measure the 3rd gear thrust clearance.

Standard clearance:
0.10 – 0.35 mm (0.0039 – 0.0138 in.)

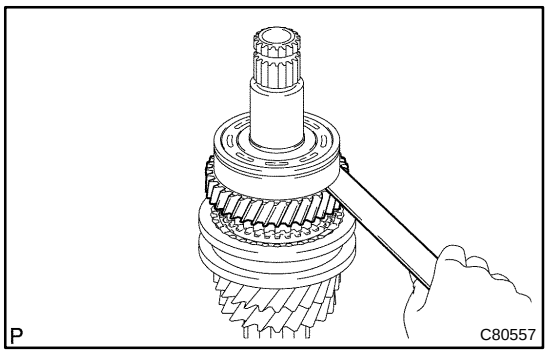

30. INSPECT 4TH GEAR THRUST CLEARANCE

(a) Using a feeler gauge, measure the 4th gear thrust clearance.

Standard clearance:
0.10 – 0.55 mm (0.0039 – 0.0217 in.)

OUTPUT SHAFT ASSY (C60)

COMPONENTS

41088–01

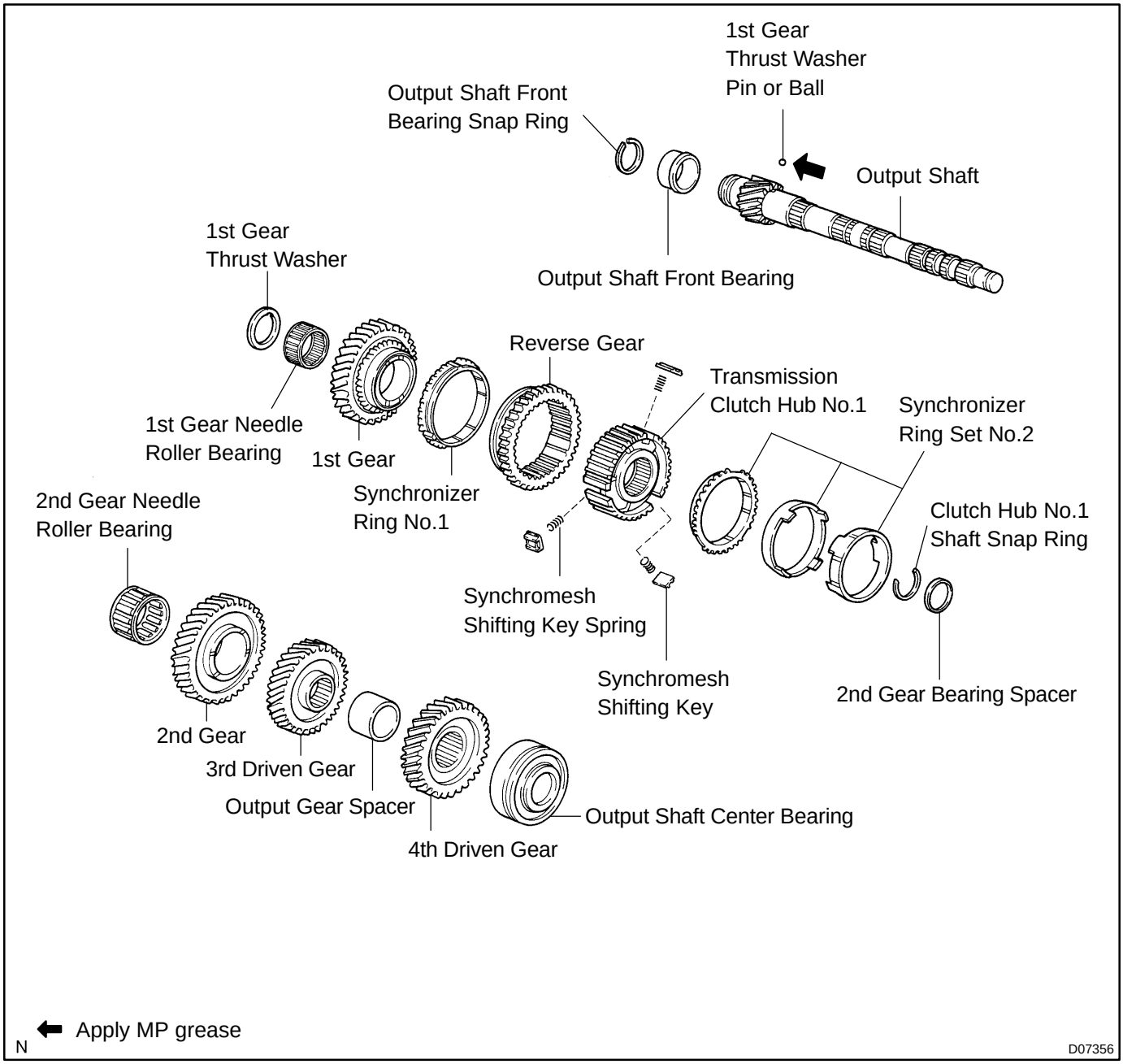

OVERHAUL

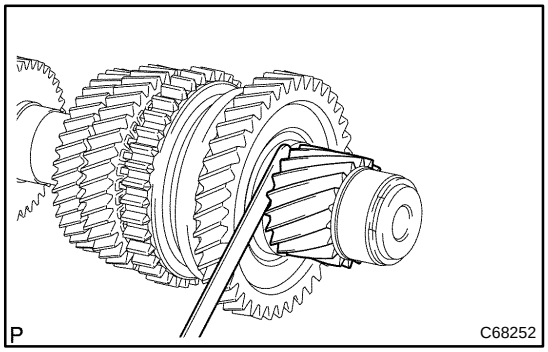

1. INSPECT 1ST GEAR THRUST CLEARANCE

(a) Using a feeler gauge, measure the 1st gear thrust clearance.

Standard clearance:
0.10 – 0.40 mm (0.0039 – 0.0157 in.)

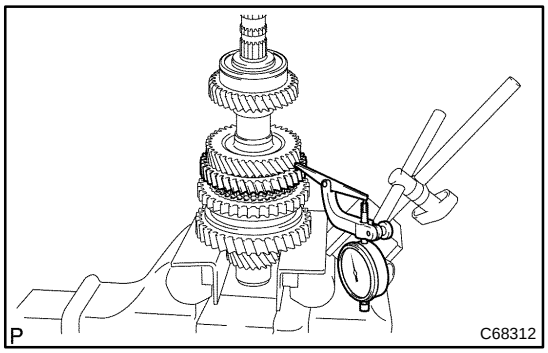

2. INSPECT 2ND GEAR THRUST CLEARANCE

(a) Using a dial indicator, measure the 2nd gear thrust clearance.

Standard clearance:
0.10 – 0.55 mm (0.0039 – 0.0217 in.)

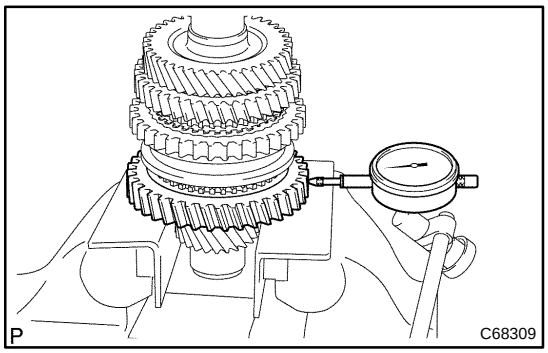

3. INSPECT 1ST GEAR RADIAL CLEARANCE

(a) Using a dial indicator, measure the 1st gear radial clearance.

Standard clearance:

Bearing	Clearance: mm (in.)
KOYO made	0.015 – 0.058 (0.0006 – 0.0023)
NSK made	0.015 – 0.056 (0.0006 – 0.0022)

If the clearance is out of specification, replace the 1st gear needle roller bearing.

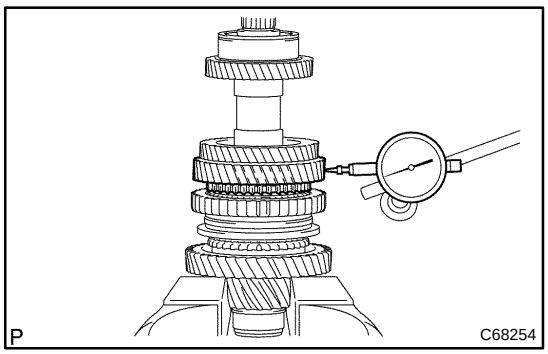

4. INSPECT 2ND GEAR RADIAL CLEARANCE

(a) Using a dial indicator, measure the 2nd gear radial clearance.

Standard clearance:

Bearing	Clearance: mm (in.)
KOYO made	0.015 – 0.058 (0.0006 – 0.0023)
NSK made	0.015 – 0.056 (0.0006 – 0.0022)

If the clearance is out of specification, replace the 2nd gear needle roller bearing.

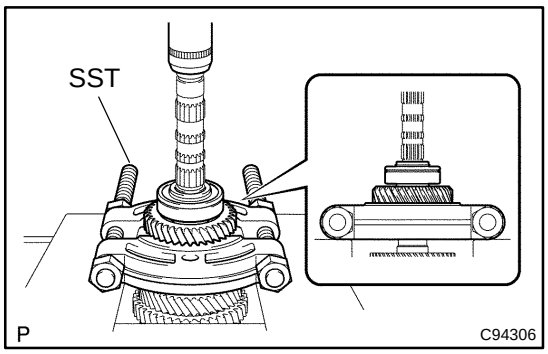

5. REMOVE 4TH DRIVEN GEAR

(a) Using SST and a press, remove the output shaft center bearing with 4th driven gear from the output shaft.
SST 09950–00020

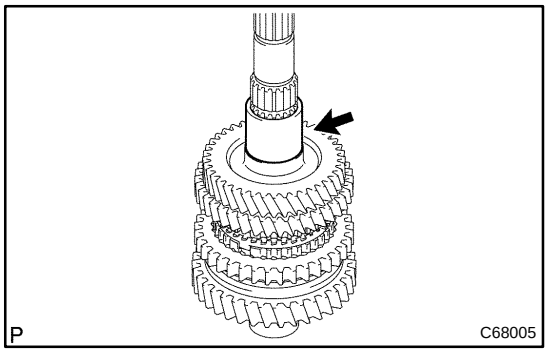

6. REMOVE OUTPUT GEAR SPACER

(a) Remove the output gear spacer from the output shaft.

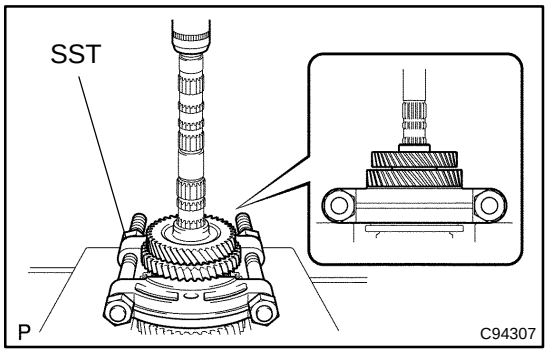

7. REMOVE 2ND GEAR

(a) Using SST and a press, remove the 3rd driven gear with 2nd gear from the output shaft.
SST 09950–00020

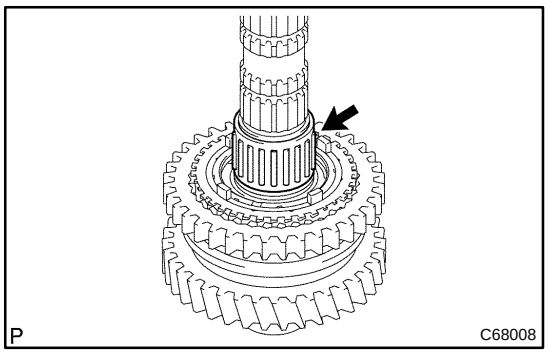

8. REMOVE 2ND GEAR NEEDLE ROLLER BEARING

(a) Remove the 2nd gear needle roller bearing from the output shaft.

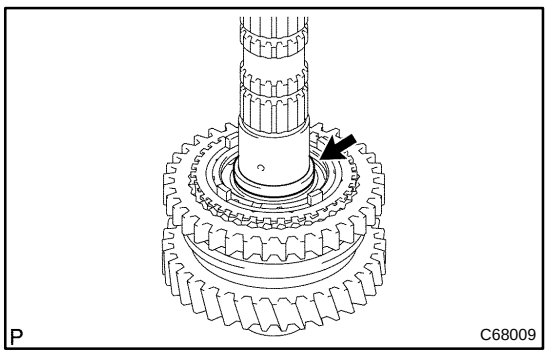

9. REMOVE 2ND GEAR BEARING SPACER

(a) Remove the 2nd gear bearing spacer from the output shaft.

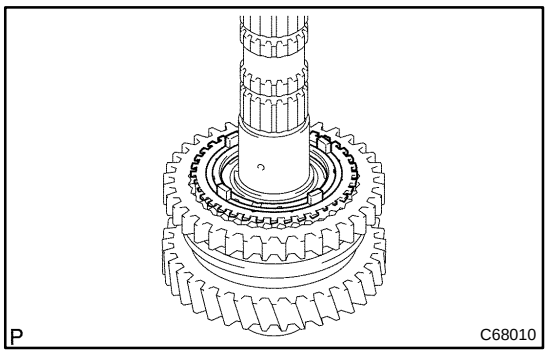

10. REMOVE SYNCHRONIZER RING SET NO.2

(a) Remove the synchronizer ring set No.2 from the output shaft.

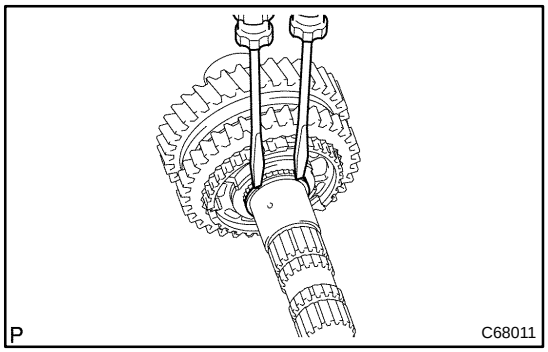

11. REMOVE 1ST GEAR

(a) Using 2 screwdrivers and a hammer, remove the clutch hub No.1 shaft snap ring from the output shaft.

NOTICE:

Using a waste to prevent the snap ring from being scattered.

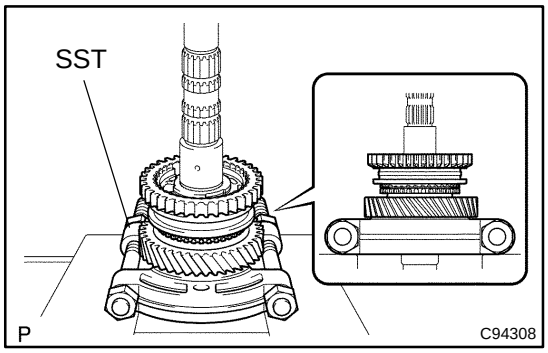

(b) Using SST and a press, remove the transmission clutch hub No.1 with 1st gear from the output shaft.
SST 09950–00020

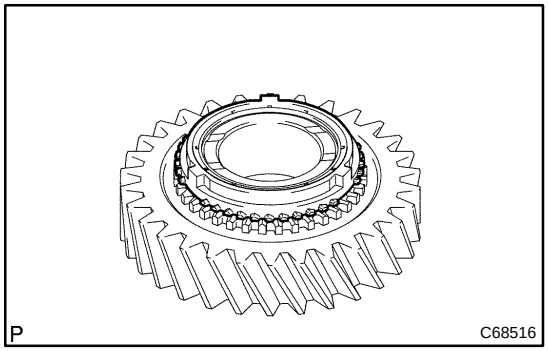

12. REMOVE SYNCHRONIZER RING NO.1

(a) Remove the synchronizer ring No.1 from the 1st gear.

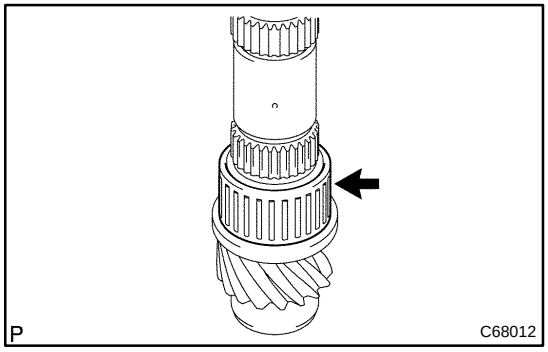

13. REMOVE 1ST GEAR NEEDLE ROLLER BEARING

(a) Remove the 1st gear needle roller bearing from the output shaft.

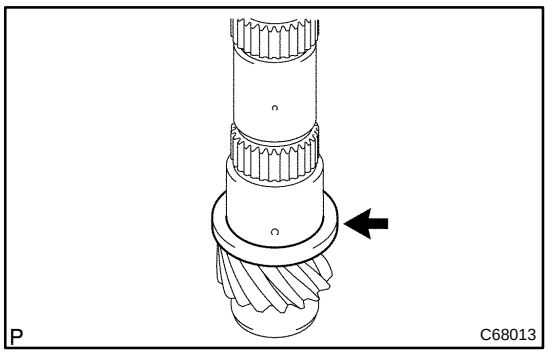

14. REMOVE 1ST GEAR THRUST WASHER

(a) Remove the 1st gear thrust washer from the output shaft.

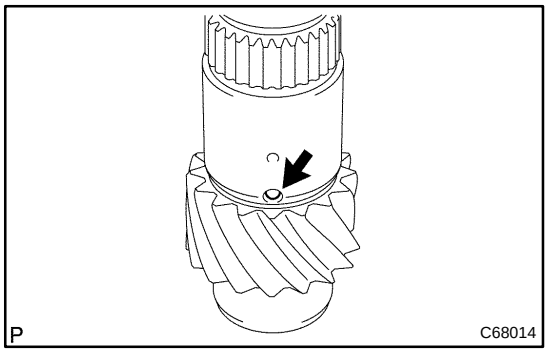

15. REMOVE 1ST GEAR THRUST WASHER PIN OR BALL

(a) Remove the 1st gear thrust washer pin or ball from the output shaft.

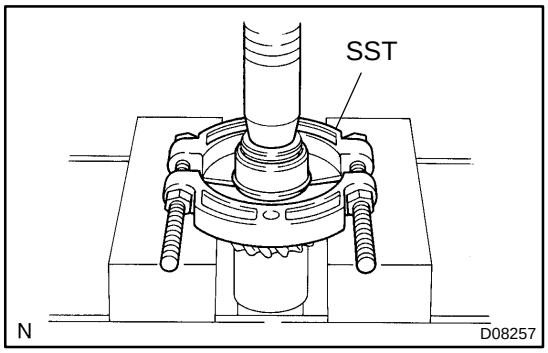

16. REMOVE OUTPUT SHAFT FRONT BEARING

(a) Using 2 screwdrivers, remove the output shaft front bearing snap ring.

(b) Using SST and a press, remove the output shaft front bearing from the output shaft.

SST 09950–00020

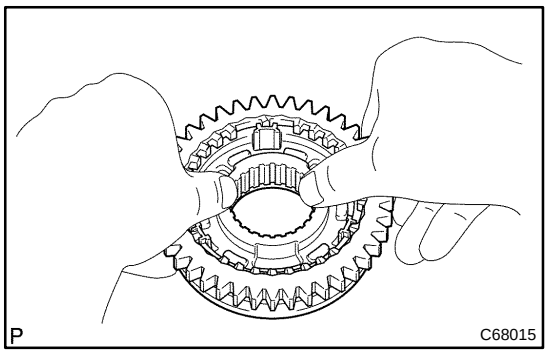

17. REMOVE REVERSE GEAR

(a) Remove the 3 synchromesh shifting keys, 3 synchromesh shifting key springs and reverse gear.

NOTICE:

Using a waste to prevent the synchromesh shifting key and spring from being scattered.

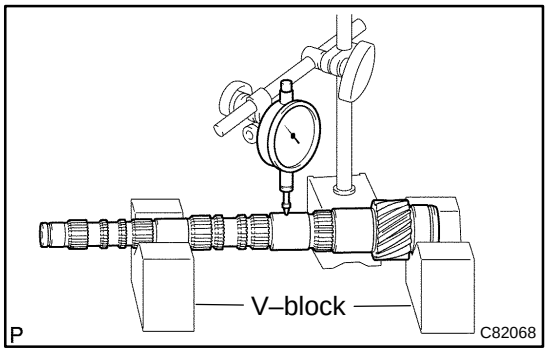

18. INSPECT OUTPUT SHAFT

(a) Using a dial indicator and 2 V–blocks, measure the shaft runout.

Maximum runout: 0.015 mm (0.0006 in.)

If the runout exceeds the maximum, replace the output shaft.

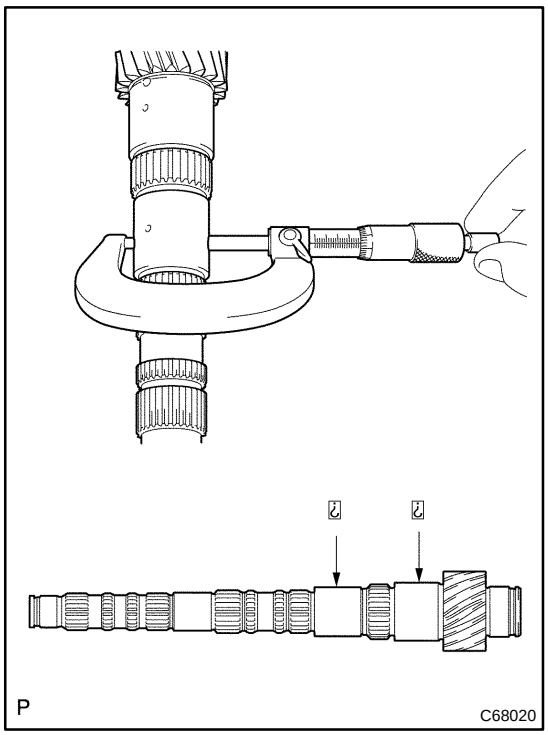

(b) Using a micrometer, measure the outer diameter of the output shaft jurnal surface.

Outer diameter:

Part	New shaft: mm (in.)	Minimum outer diameter: mm (in.)
A	31.985 – 32.000 (1.2592 – 1.2598)	31.985 (1.2592)
B	37.985 – 38.000 (1.4955 – 1.4961)	37.985 (1.4955)

If the outer diameter is less than the minimum, replace the output shaft.

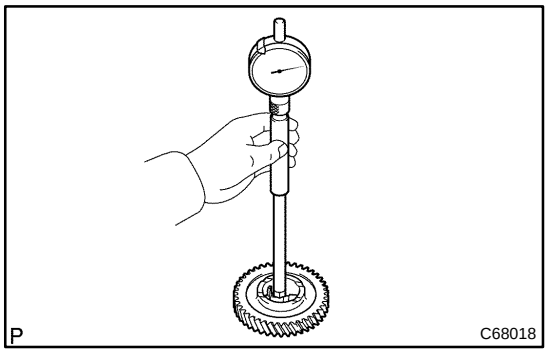

19. INSPECT 2ND GEAR

(a) Using a cylinder gauge, measure the inside diameter of the 2nd gear.

Inside diameter:

New gear: mm (in.)	Maximum inside diameter: mm (in.)
38.015 – 38.031 (1.4967 – 1.4973)	38.031 (1.4973)

If the inside diameter is exceeds the maximum, replace the 2nd gear.

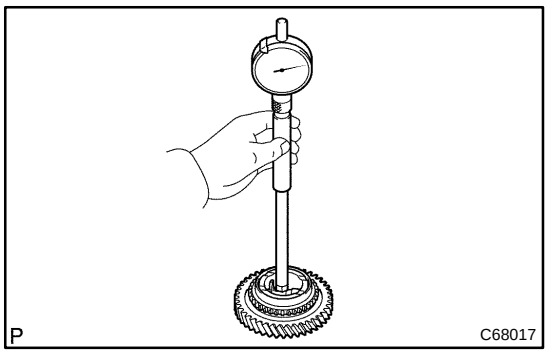

20. INSPECT 1ST GEAR

(a) Using a cylinder gauge, measure the inside diameter of the 1st gear.

Inside diameter:

New gear: mm (in.)	Maximum inside diameter: mm (in.)
44.015 – 44.031 (1.7329 – 1.7335)	44.031 (1.7335)

If the inside diameter is exceeds the maximum, replace the 1st gear.

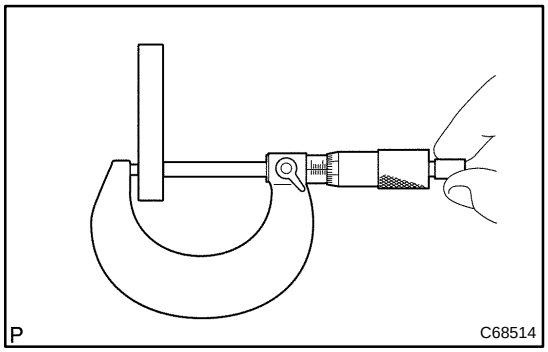

21. INSPECT 1ST GEAR THRUST WASHER

(a) Using a micrometer, measure the thickness of 1st gear thrust washer.

Thickness:

New thrust washer: mm (in.)	Minimum thickness: mm (in.)
5.975 – 6.025 (0.2352 – 0.2372)	5.975 (0.2352)

If the thickness is less than the minimum, replace the 1st gear thrust washer.

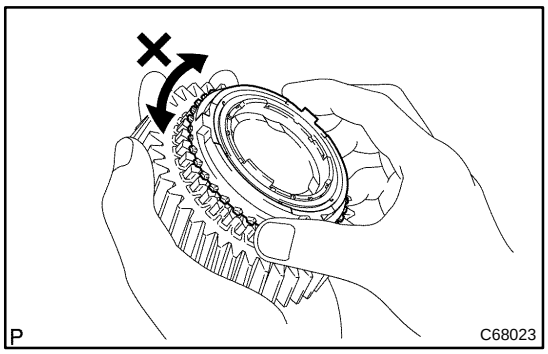

22. INSPECT SYNCHRONIZER RING SET NO.2

(a) Coat the 2nd gear cone with gear oil.
Check the braking effect of the synchronizer ring.

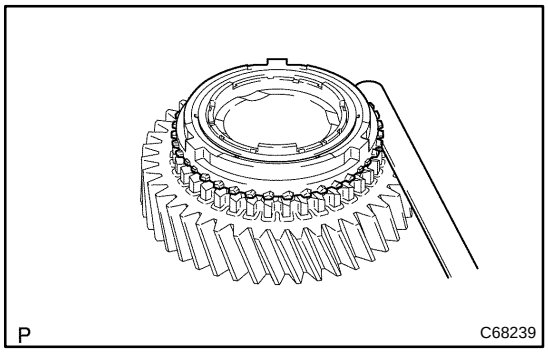

(b) Using a feeler gauge, measure the clearance between the synchronizer ring back and gear spline end.
Standard clearance: 0.7 – 1.3 mm (0.0276 – 0.0512)

If the clearance is out of specification, replace the synchronizer ring set No.2.

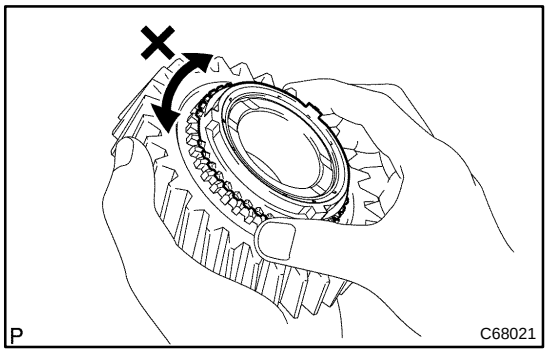

23. INSPECT SYNCHRONIZER RING NO.1

(a) Coat the 1st gear cone with gear oil.
Check the braking effect of the synchronizer ring.

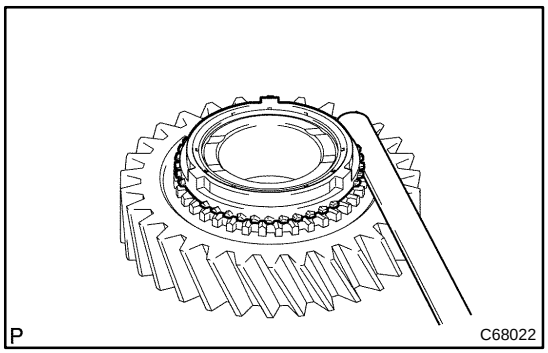

(b) Using a feeler gauge, measure the clearance between the synchronizer ring back and gear spline end.
Standard clearance: 0.75 – 1.65 mm (0.0295 – 0.065)

If the clearance is out of specification, replace the synchronizer ring No.1.

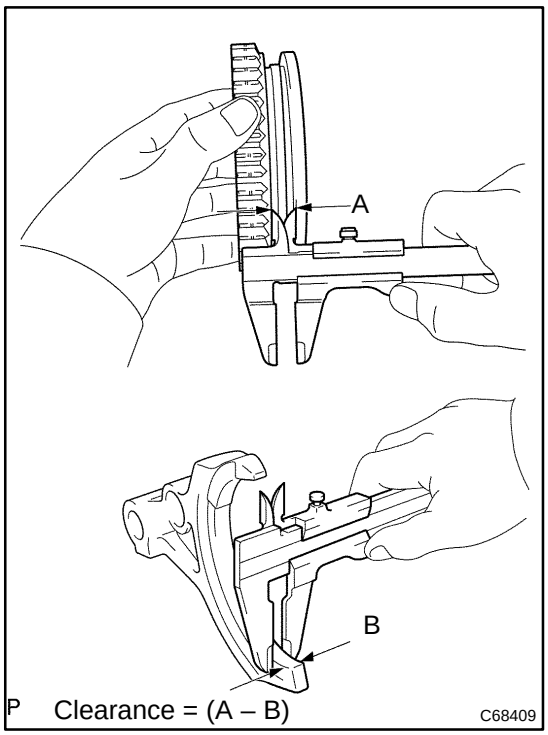

24. INSPECT REVERSE GEAR

(a) Using a vernier caliper, measure the clearance between reverse gear and shift fork.

Standard clearance:

0.15 – 0.35 mm (0.0059 – 0.0138 in.)

If the clearance is out of specification, replace the reverse gear and reverse shift fork.

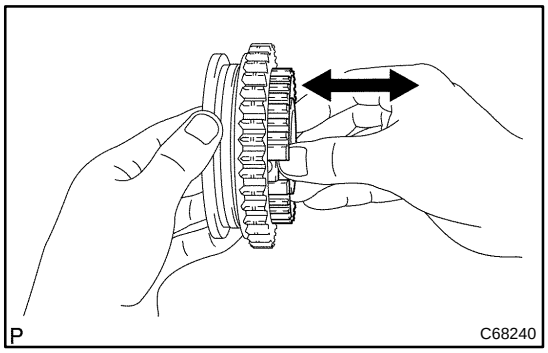

25. INSPECT TRANSMISSION CLUTCH HUB NO.1

(a) Check that the transmission clutch hub No.1 and reverse gear slides smoothly.

(b) Check that the spline gear's edges of the reverse gear is not worn down.

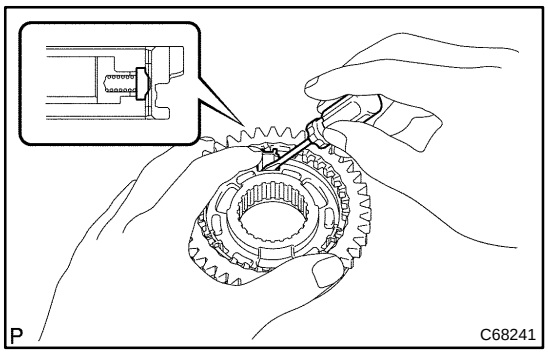

26. INSTALL REVERSE GEAR

(a) Coat the reverse gear with gear oil, install it to the transmission clutch hub No.1.

NOTICE:

Do not set the reverse gear and transmission clutch hub No.1 in incorrect orientation.

(b) Using a screwdriver, install the 3 synchromesh shifting key springs and 3 synchromesh shifting keys.

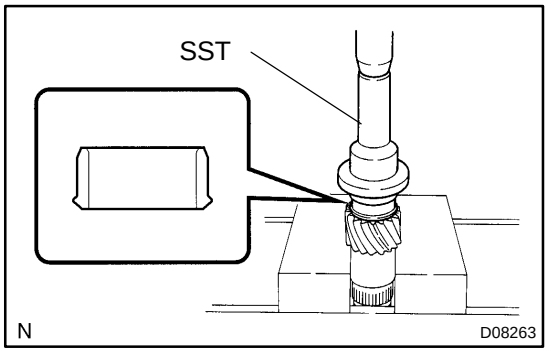

27. INSTALL OUTPUT SHAFT FRONT BEARING

(a) Using SST and a press, install the output shaft front bearing (inner race) to the output shaft.

SST 09223–50010

(b) Using a brass bar and a hammer, install the output shaft snap ring to the output shaft.

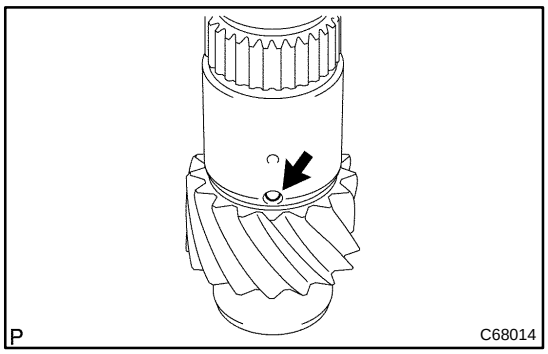

28. INSTALL 1ST GEAR THRUST WASHER PIN OR BALL

(a) Coat the 1st gear thrust washer pin or ball with MP grease, install it to the output shaft.

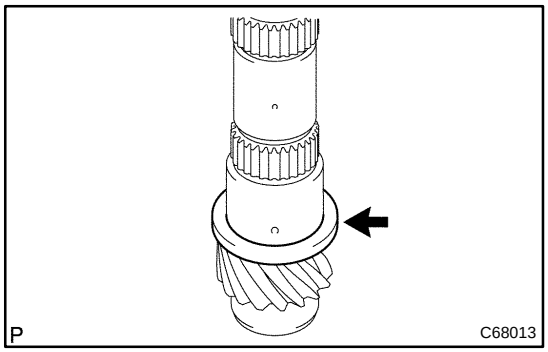

29. INSTALL 1ST GEAR THRUST WASHER

(a) Coat the 1st gear thrust washer with gear oil, install it to the output shaft.

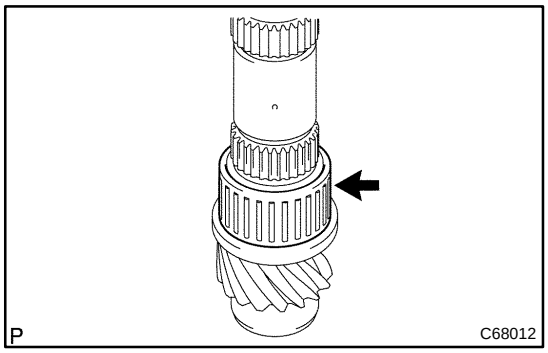

30. INSTALL 1ST GEAR NEEDLE ROLLER BEARING

(a) Coat the 1st gear needle roller bearing with gear oil, install it to the output shaft.

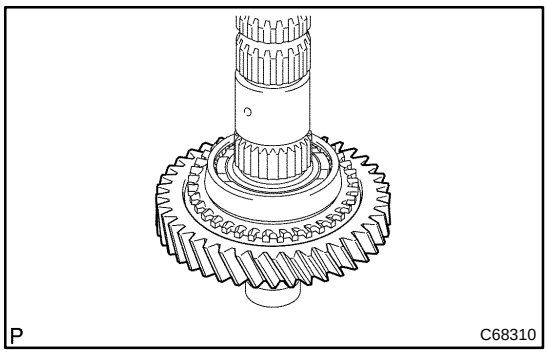

31. INSTALL 1ST GEAR

(a) Coat the 1st gear with gear oil, install it to the output shaft.

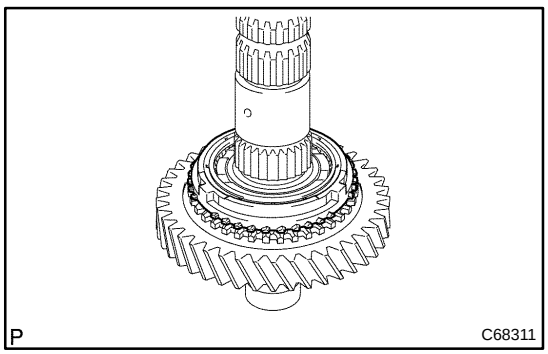

32. INSTALL SYNCHRONIZER RING NO.1

(a) Coat the synchronizer ring No.1 with gear oil, install it to the 1st gear.

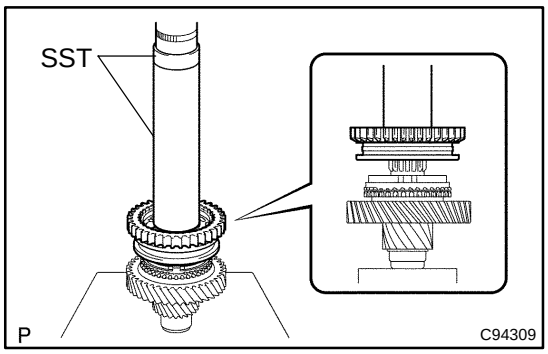

33. INSTALL TRANSMISSION CLUTCH HUB NO.1

(a) Using SST and a press, install the transmission clutch hub No.1 to the output shaft.

SST 09309–36100 (09309–03610), 09950–60010 (09951–00450)

NOTICE:

The 1st gear can be turned.

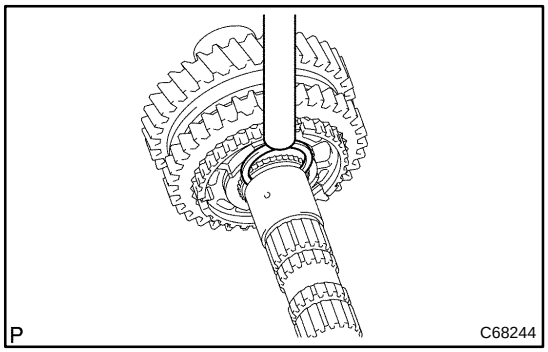

(b) Select a snap ring that will allow minimum axial play.

Standard clearance: 0.1 mm (0.004 in.) or less

Snap ring thickness:

Part No.	Thickness: mm (in.)	Mark
90520 – 29018	2.50 (0.0984)	A
90520 – 29019	2.56 (0.1008)	B
90520 – 29020	2.62 (0.1031)	C
90520 – 29021	2.68 (0.1055)	D
90520 – 29022	2.74 (0.1079)	E
90520 – 29023	2.80 (0.1102)	F

(c) Using a brass bar and a hammer, install the snap ring to the output shaft.

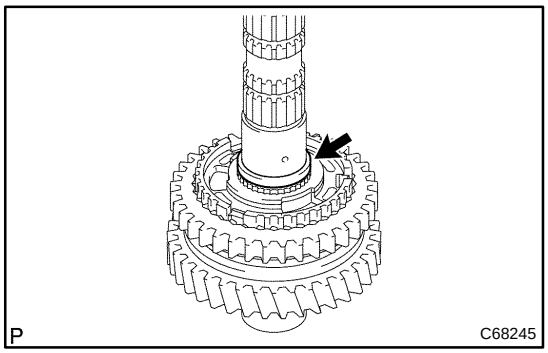

34. INSTALL 2ND GEAR BEARING SPACER

(a) Coat the 2nd gear bearing spacer with gear oil, install it to the output shaft.

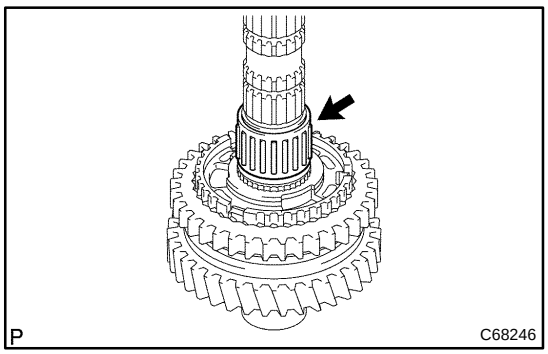

35. INSTALL 2ND GEAR NEEDLE ROLLER BEARING

(a) Coat the 2nd gear needle roller bearing with gear oil, install it to the output shaft.

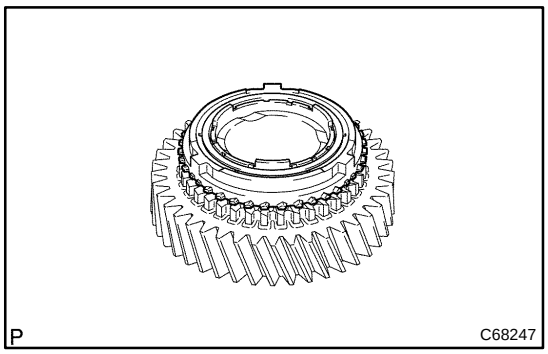

36. INSTALL SYNCHRONIZER RING SET NO.2

(a) Coat the synchronizer ring set No.2 with gear oil, install it to the 2nd gear.

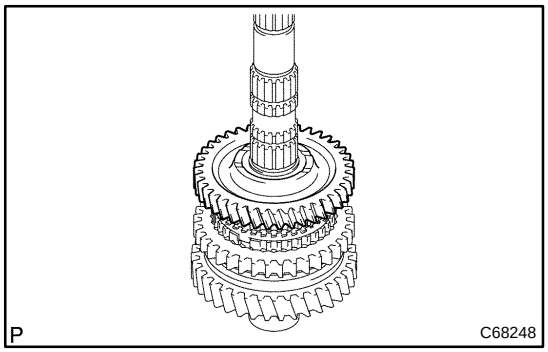

37. INSTALL 2ND GEAR

(a) Coat the 2nd gear with oil, install it to the output shaft.

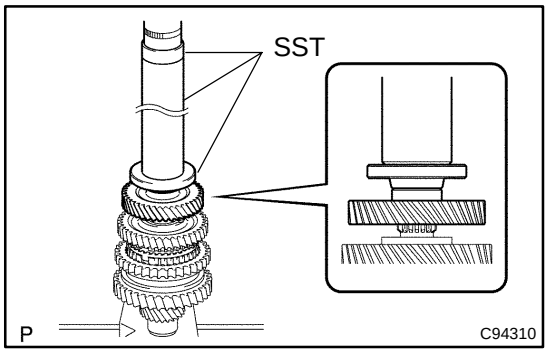

38. INSTALL 3RD DRIVEN GEAR

(a) Using SST and a press, install the 3rd driven gear to the output shaft.

SST 09309–36100 (09309–03610), 09608–00071, 09950–60010 (09951–00450)

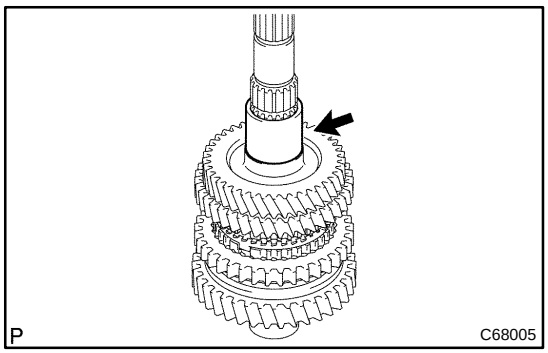

39. INSTALL OUTPUT GEAR SPACER

(a) Install the output gear spacer to the output shaft.

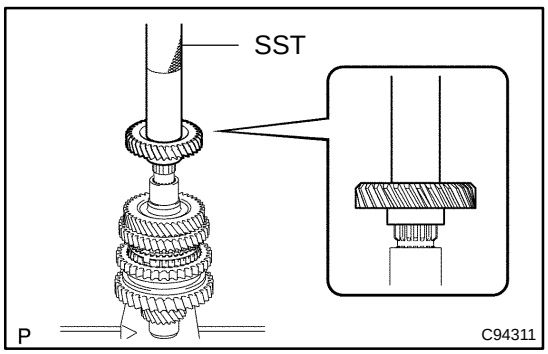

40. INSTALL 4TH DRIVEN GEAR

(a) Using SST and a press, install 4th driven gear to the output shaft.

SST 09612–22011

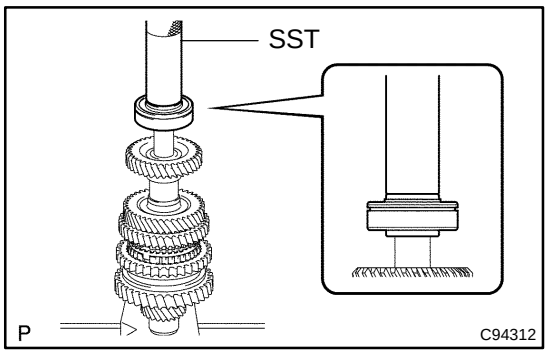

41. INSTALL OUTPUT SHAFT CENTER BEARING

(a) Using SST and a press, install output shaft bearing CTR to the output shaft.
SST 09612–22011

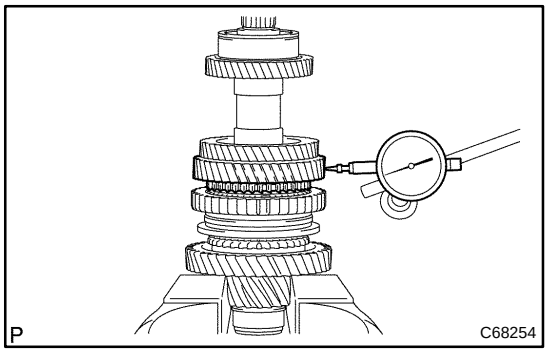

42. INSPECT 2ND GEAR RADIAL CLEARANCE

(a) Using a dial indicator, measure the 2nd gear radial clearance.

Standard clearance:

Bearing	Clearance: mm (in.)
KOYO made	0.015 – 0.058 (0.0006 – 0.0230)
NSK made	0.015 – 0.056 (0.0006 – 0.0022)

If the clearance is out of specification, replace the 2nd gear needle roller bearing.

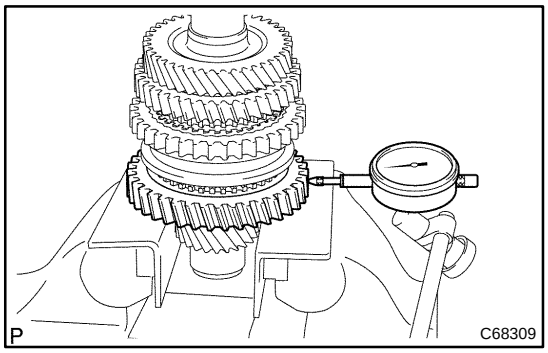

43. INSPECT 1ST GEAR RADIAL CLEARANCE

(a) Using a dial indicator, measure the 1st gear radial clearance.

Standard clearance:

Bearing	Clearance: mm (in.)
KOYO made	0.015 – 0.058 (0.0006 – 0.0230)
NSK made	0.015 – 0.056 (0.0006 – 0.0022)

If the clearance is out of specification, replace the 1st gear needle roller bearing.

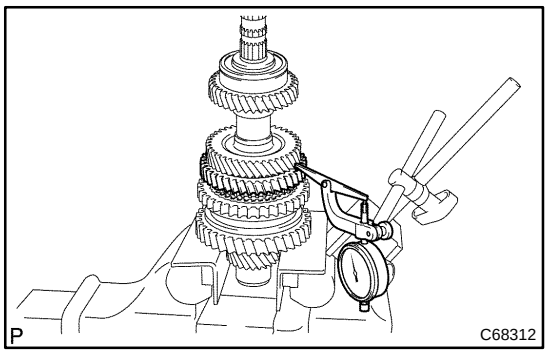

44. INSPECT 2ND GEAR THRUST CLEARANCE

(a) Using a dial indicator, measure the 2nd gear thrust clearance.

Standard clearance:
0.10 – 0.55 mm (0.0039 – 0.0217 in.)

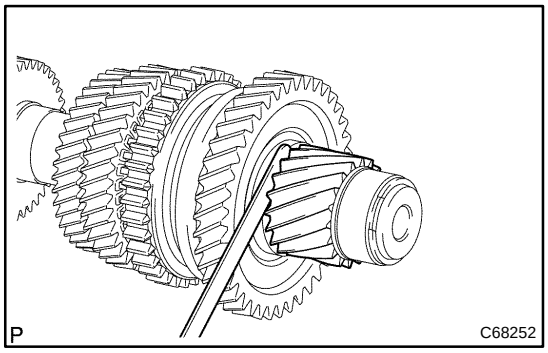

45. INSPECT 1ST GEAR THRUST CLEARANCE

(a) Using a feeler gauge, measure the 1st gear thrust clearance.

Standard clearance:
0.10 – 0.40 mm (0.0039 – 0.0157 in.)

SHIFT & SELECT LEVER SHAFT ASSY (C60)

4108E–01

COMPONENTS

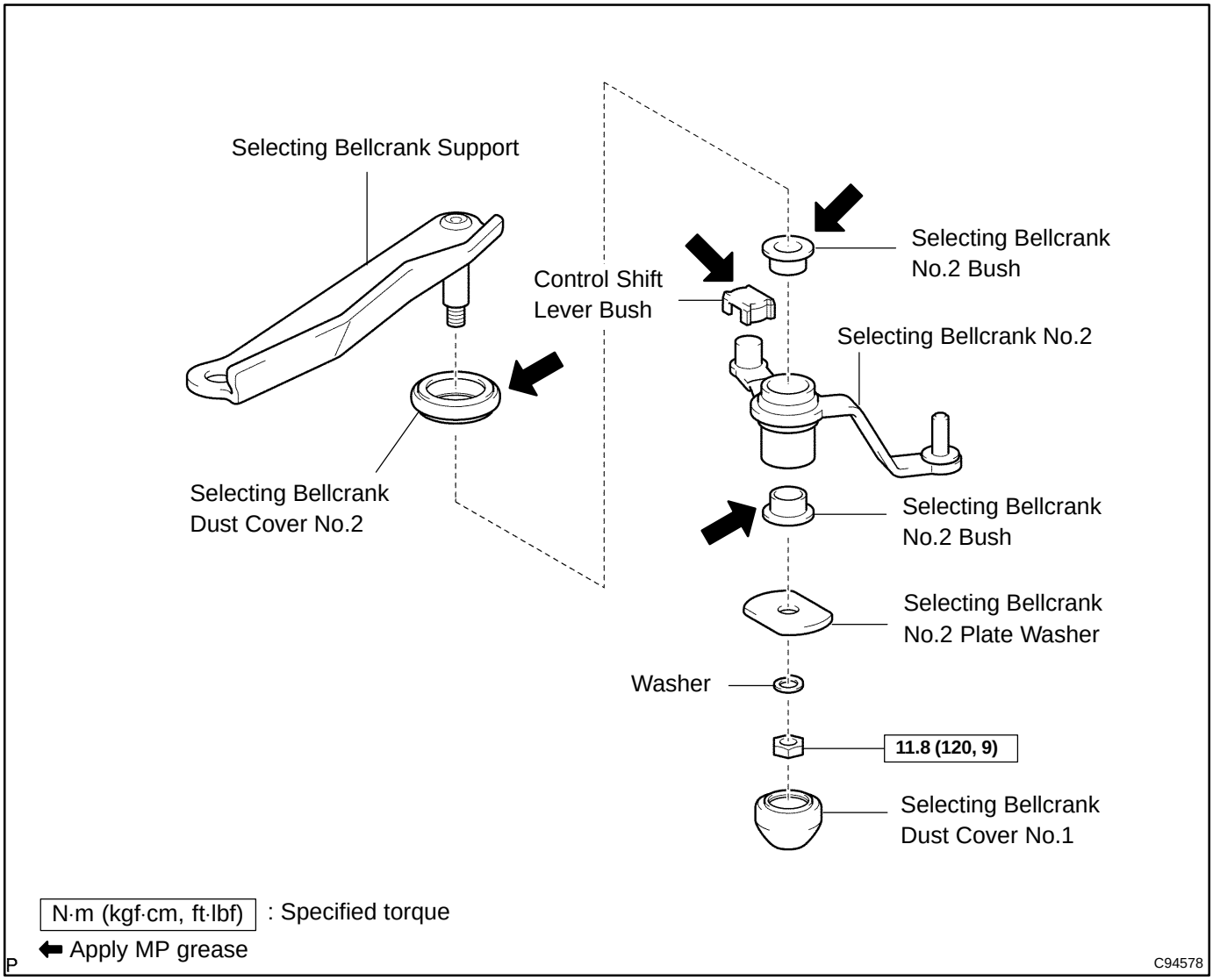

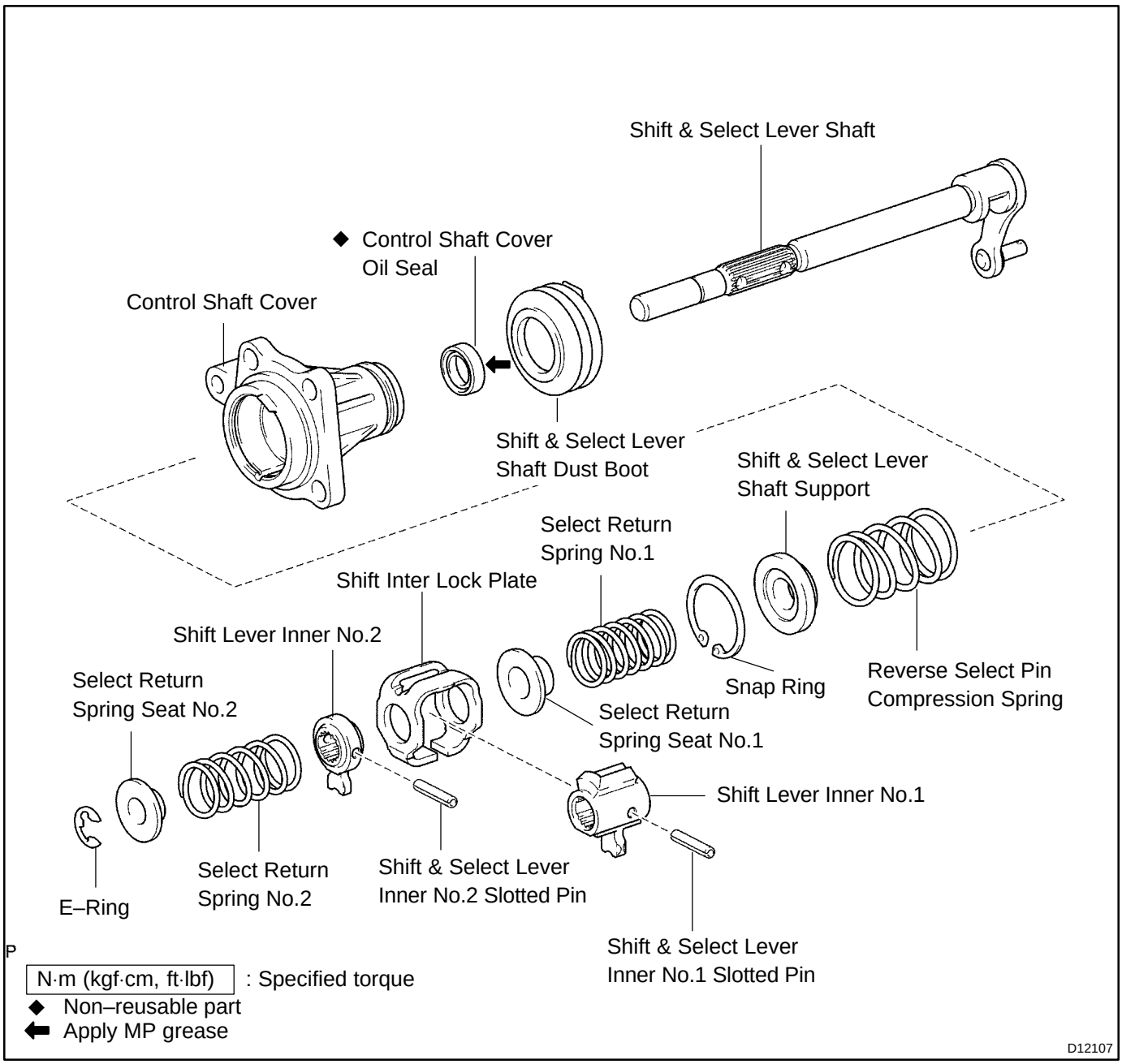
Shift & Select Lever Shaft
◆ Control Shaft Cover Oil Seal
Control Shaft Cover
Shift & Select Lever Shaft Dust Boot
Shift & Select Lever Shaft Support
Select Return Spring No.1
Shift Inter Lock Plate
Shift Lever Inner No.2
Select Return Spring Seat No.2
Snap Ring
Reverse Select Pin Compression Spring
Select Return Spring Seat No.1
Shift Lever Inner No.1
E–Ring
Select Return Spring No.2
Shift & Select Lever Inner No.2 Slotted Pin
Shift & Select Lever Inner No.1 Slotted Pin
P
N·m (kgf·cm, ft·lbf) : Specified torque
◆ Non–reusable part
⬅ Apply MP grease
D12107

OVERHAUL

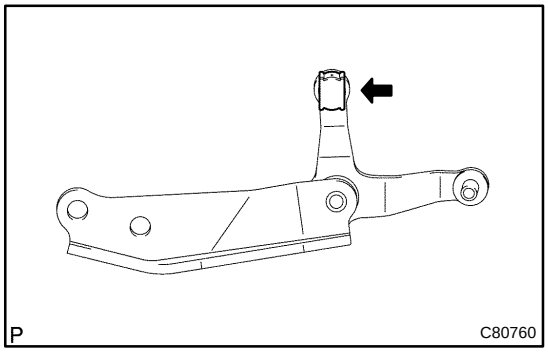

1. REMOVE CONTROL SHIFT LEVER BUSH

(a) Remove the control shift lever bush from the selecting bellcrank assy.

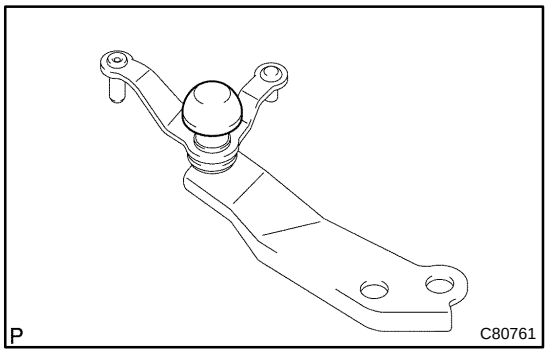

2. REMOVE SELECTING BELLCRANK DUST COVER NO.1

(a) Remove the selecting bellcrank dust cover No.1 from the selecting bellcrank assy.

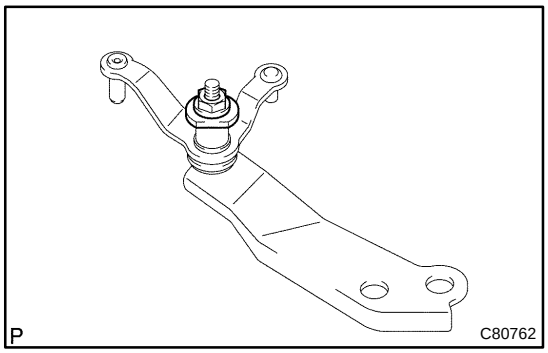

3. REMOVE SELECTING BELL CRANK NO.2

(a) Remove the nut, spring washer and selecting bellcrank assy No.2 plate washer.

(b) Remove the selecting bellcrank No.2 from the selecting bellcrank support.

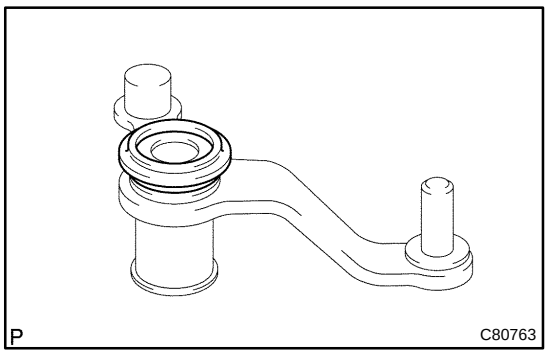

4. REMOVE SELECTING BELLCRANK DUST COVER NO.2

(a) Remove the selecting bellcrank dust cover No.2 from the selecting bellcrank No.2.

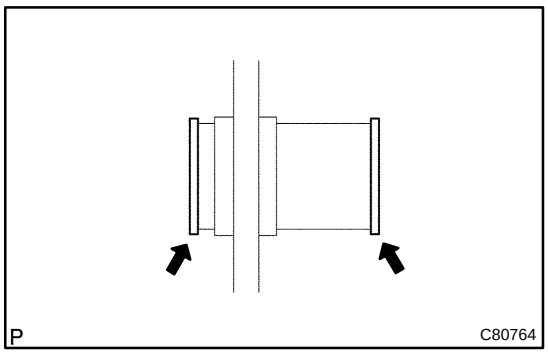

5. REMOVE SELECTING BELLCRANK NO.2 BUSH

(a) Remove the 2 selecting bellcrank No.2 bushes from the selecting bellcrank No.2.

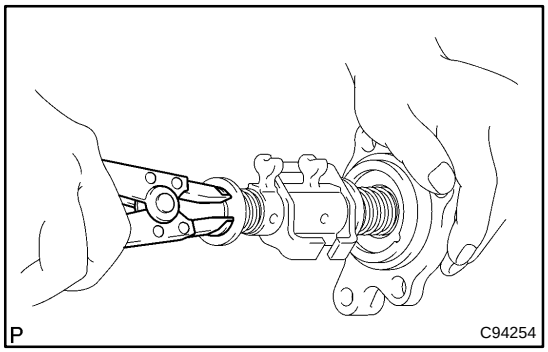

6. REMOVE SELECT SPRING SEAT NO.2

(a) Using a snap ring expander, remove the E–ring from the shift & select lever shaft assy.

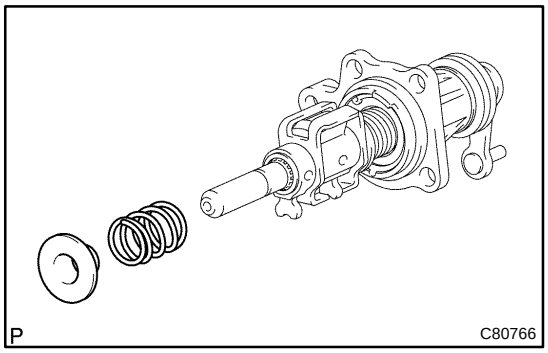

(b) Remove the select spring seat No.2 and select return spring No.2 from the shift & select lever shaft assy.

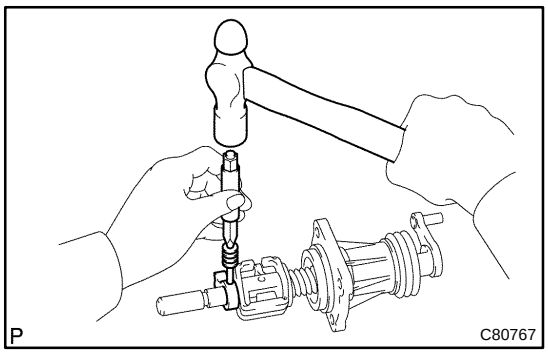

7. REMOVE SHIFT LEVER INNER NO.2

(a) Using a pin punch (ϕ 5 mm), remove the shift & select lever inner No.2 slotted pin from the shift & select lever shaft assy.

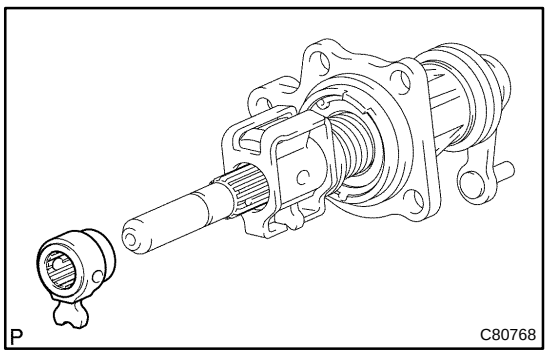

(b) Remove the shift lever inner No.2 from the shift & select lever shaft assy.

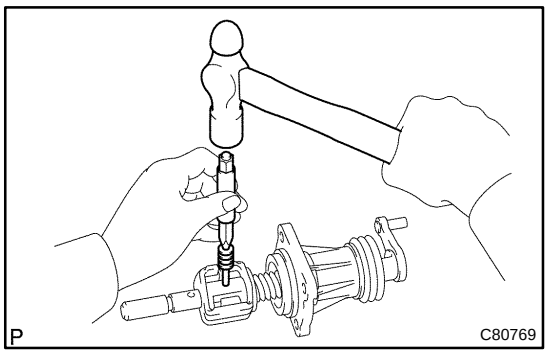

8. REMOVE SHIFT LEVER INNER NO.1

(a) Using a pin punch (ϕ 5 mm) and a hammer, remove the shift lever inner No.1 slotted pin from the shift & select lever shaft assy.

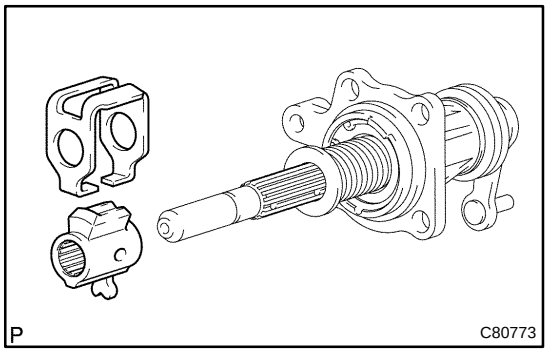

(b) Remove the shift lever inner No.1 and shift inter lock plate from the shift & select lever shaft assy.

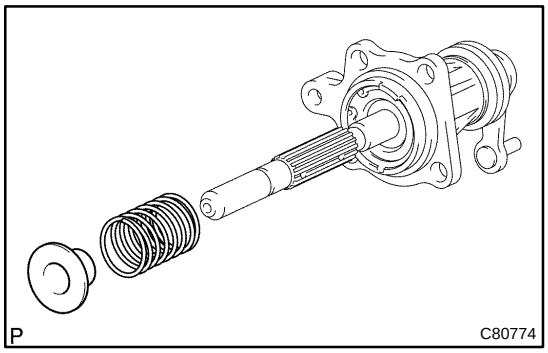

(c) Remove the select spring seat No.1 and select return spring No.1 from the shift & select lever shaft assy.

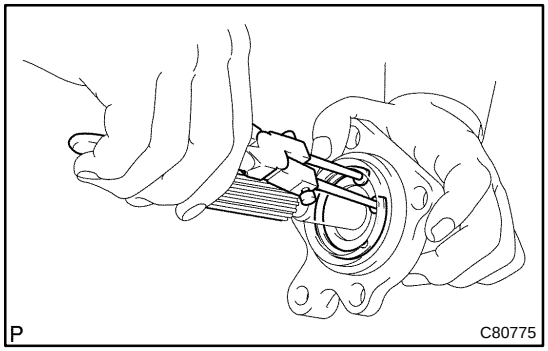

9. REMOVE SHIFT & SELECT LEVER SHAFT SUPPORT

(a) Using a snap ring expander, remove the snap ring from the control shaft cover.

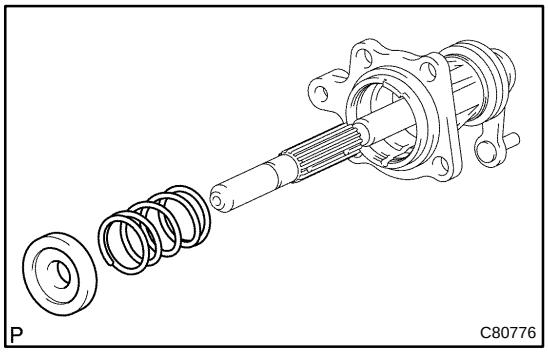

(b) Remove the shift & select lever shaft support and reverse select pin compression spring from the control shaft cover.

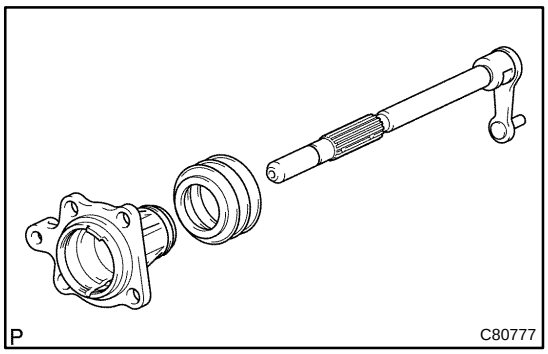

10. REMOVE SHIFT & SELECT LEVER SHAFT

(a) Remove the shift & select lever shaft and shift & select lever shaft dust boot from the control shaft cover.

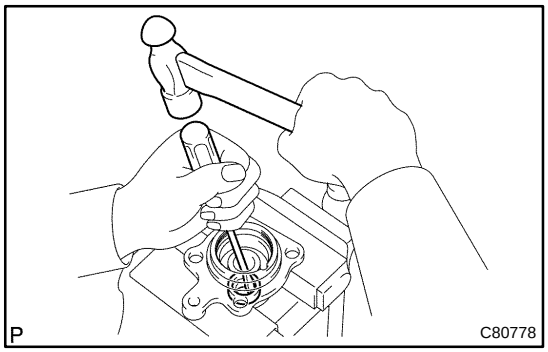

11. REMOVE CONTROL SHAFT COVER OIL SEAL

(a) Using a screwdriver and a hammer, remove the control shaft cover oil seal from the control shaft cover.

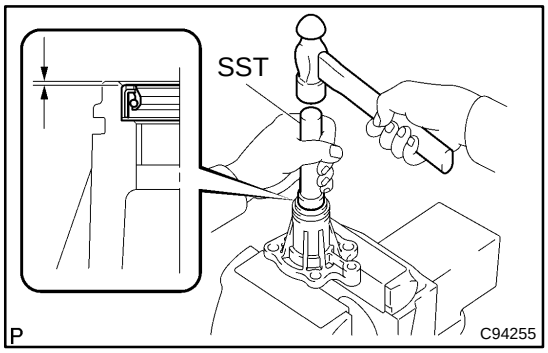

12. INSTALL CONTROL SHAFT COVER OIL SEAL

(a) Coat the control shaft cover oil seal with MP grease.

(b) Using SST and a hammer, install the control shaft cover oil seal to the control shaft cover.

SST 09950–60010 (09951–00280), 09950–70010 (09951–07150)

Driven in depth: 0.7 ± 0.5 mm (0.0276 ± 0.0197 in.)

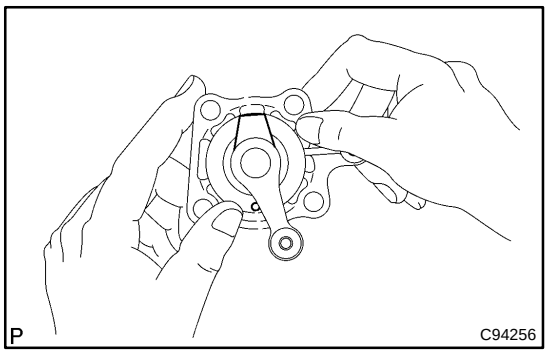

13. INSTALL SHIFT & SELECT LEVER SHAFT

(a) Coat the shift & select lever shaft with gear oil.

(b) Install the shift & select lever shaft with shift & select lever shaft dust boots to the control shaft cover.

HINT:

Install the shift & select lever shaft boots with the projection up and the hole side down.

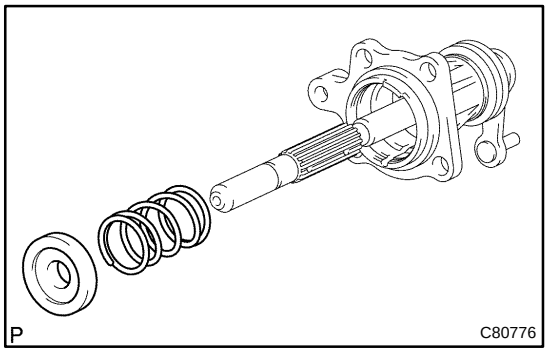

14. INSTALL SHIFT & SELECT LEVER SHAFT SUPPORT

(a) Install the shift & select lever shaft support and reverse select pin compression spring to the control shaft cover.

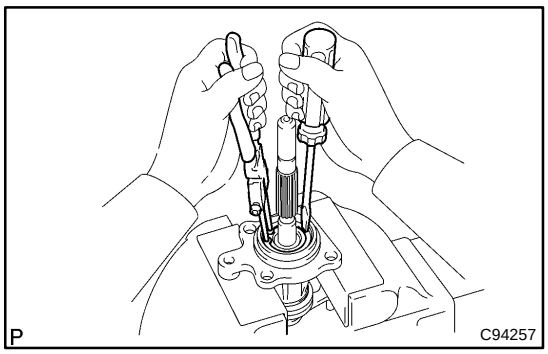

(b) Using a snap ring expander and a screwdriver, install the snap ring to the control shaft cover.

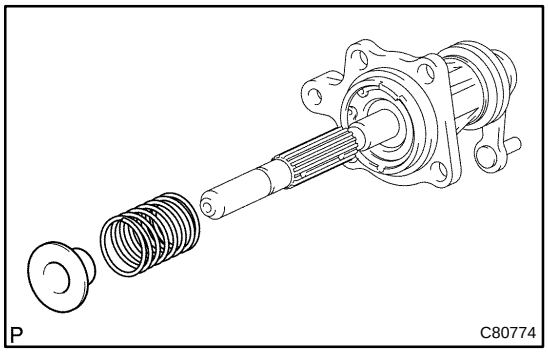

15. INSTALL SHIFT LEVER INNER NO.1

(a) Install the select spring seat No.1 with select return spring No.1 to the shift & select lever shaft assy.

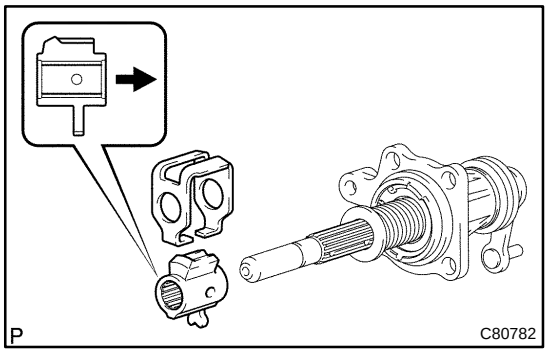

(b) Coat the shift lever inner No.1 with gear oil.

(c) Install the shift lever inner No.1 with shift inter lock plate to the shift & select lever shaft assy.

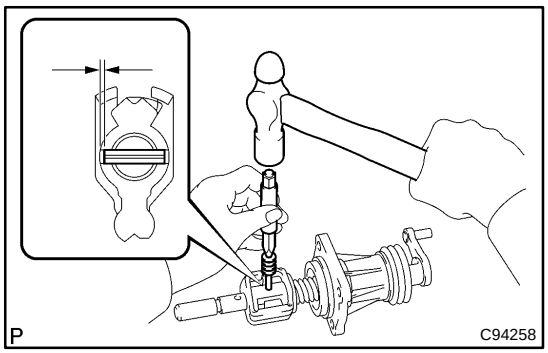

(d) Using a pin punch (ϕ 5 mm) and a hammer, install the shift inner lever slotted pin to the shift & select lever shaft assy.
Driven in depth: 0 ± 0.5 mm (0 ± 0.0197 in.)

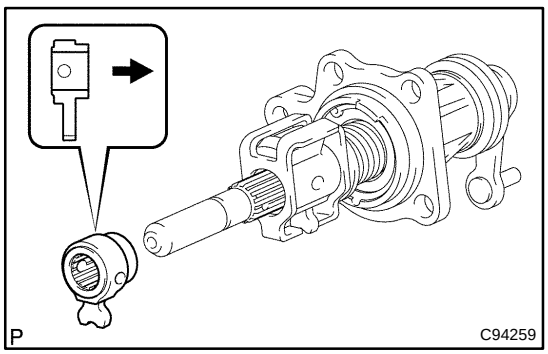

16. INSTALL SHIFT LEVER INNER NO.2

(a) Coat the shift lever inner No.2 with gear oil.

(b) Install the shift & select lever inner No.2 to the shift & select lever shaft assy.

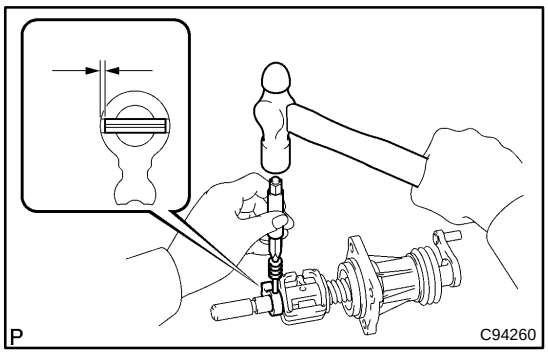

(c) Using a pin punch (ϕ 5 mm) and a hammer, install the shift inner lever slotted pin to the shift & select lever shaft assy.
Driven in depth: 3.5 ± 0.5 mm (0.1378 ± 0.0197 in.)

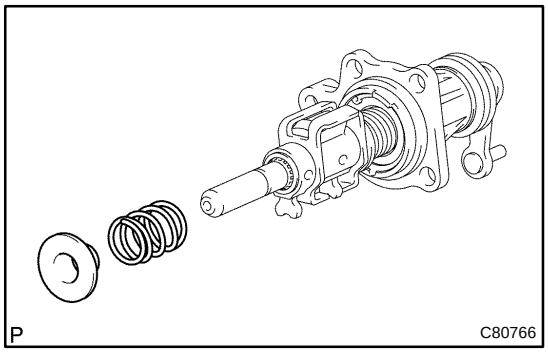

17. INSTALL SELECT SPRING SEAT NO.2

(a) Install the select spring seat No.2 with select return spring No.2 to the shift & select lever shaft assy.

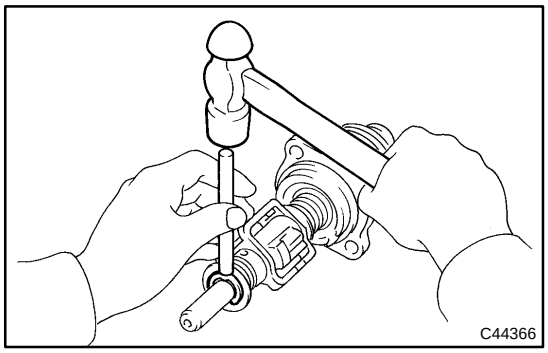

(b) Using a brass bar and a hammer, install the E–ring to the shift & select lever shaft assy.

NOTICE:
Do not damage the shift & select lever shaft assy.

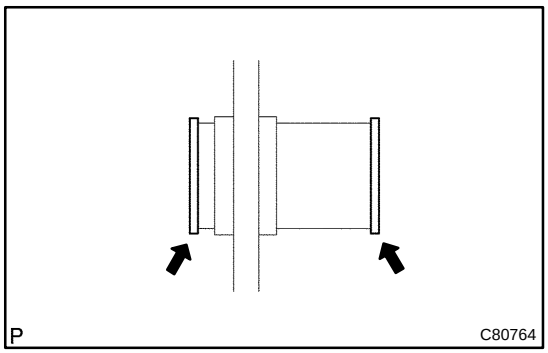

18. INSTALL SELECTING BELLCRANK NO.2 BUSH

(a) Coat the 2 selecting bellcrank No.2 bushes with MP grease, install them to the selecting bellcrank No.2.

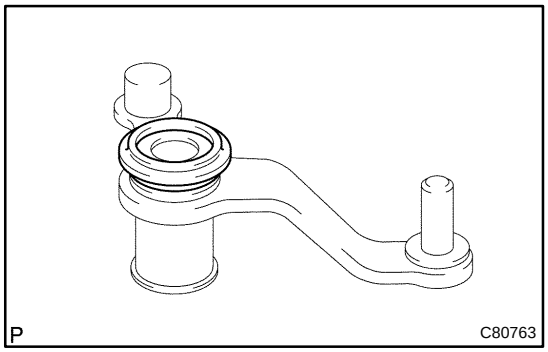

19. INSTALL SELECTING BELLCRANK DUST COVER NO.2

(a) Coat the selecting bellcrank dust cover No.2 with MP grease, install it to the selecting bellcrank No.2.

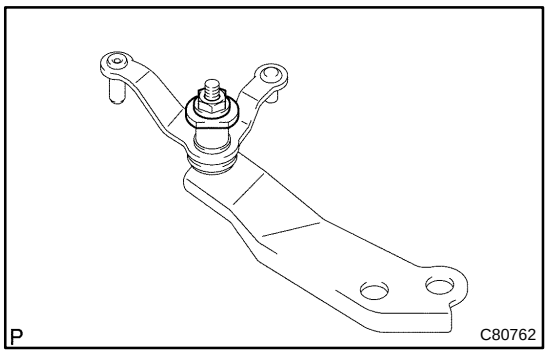

20. INSTALL SELECTING BELL CRANK NO.2

(a) Install the selecting bellcrank No.2, selecting bellcrank No.2 plate washer, spring washer and nut.
Torque: 11.8 N·m (120 kgf·cm, 9 ft·lbf)

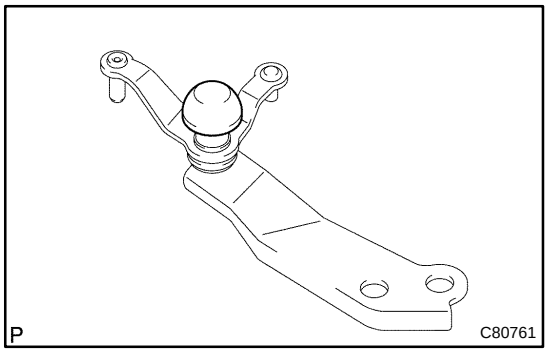

21. INSTALL SELECTING BELLCRANK DUST COVER NO.1

(a) Install the selecting bellcrank dust cover No.1 to the selecting bellcrank assy.

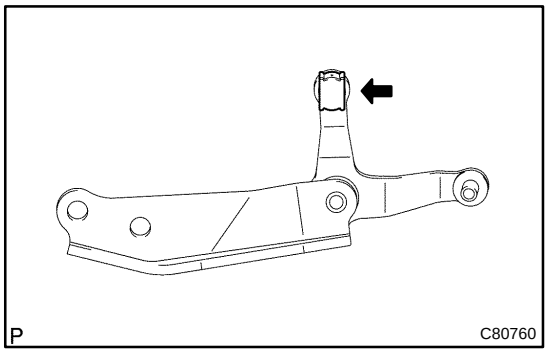

22. INSTALL CONTROL SHIFT LEVER BUSH

(a) Install shift & select lever bush to the selecting bellcrank assy.

FLOOR SHIFT CABLE TRANSMISSION CONTROL SHIFT (MTM)

4107U–01

REPLACEMENT

HINT:

COMPONENTS: See page 41–5 or 71–7

1. PRECAUTION

NOTICE:

Do not open the cover or the case of the ECU and various electrical devices unless absolutely necessary (If the IC terminals are touched, the IC may be destroyed by static electricity.).

2. DISCONNECT BATTERY NEGATIVE TERMINAL

3. REMOVE FLOOR SHIFT SHIFT LEVER KNOB SUB–ASSY

4. REMOVE INSTRUMENT CLUSTER FINISH PANEL ASSY CTR (See page 71–10)

5. REMOVE INSTRUMENT PANEL BOX (See page 71–10)

6. REMOVE INSTRUMENT PANEL FINISH PANEL LOWER CENTER (See page 71–10)

7. REMOVE AIR BAG SENSOR ASSY CENTER (See page 60–39)

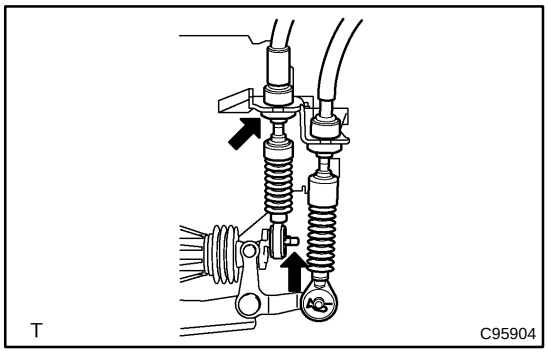

8. REMOVE FLOOR SHIFT CABLE TRANSMISSION CONTROL SHIFT

(a) Remove the clip, washer and disconnect the cable end of the shift cable from the transaxle.

(b) Remove the clip and disconnect the shift cable from the bracket.

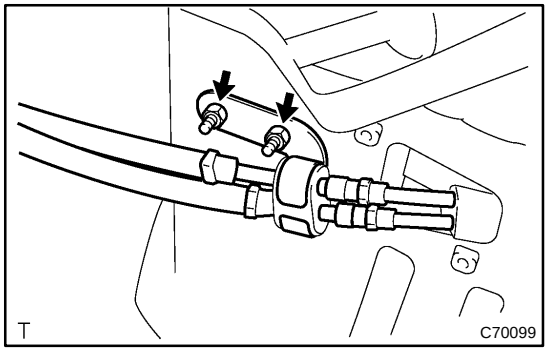

(c) Remove the 2 nuts and disconnect the shift cable.

(d) DIsconnect the shift cable from the clamp.

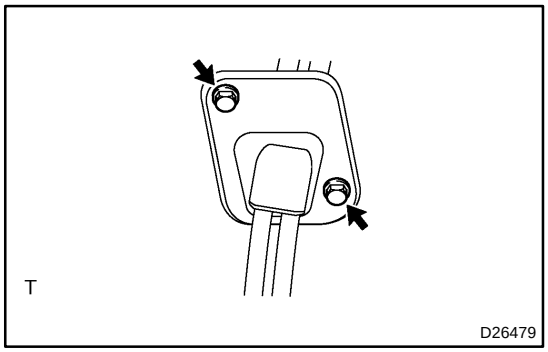

(e) Remove the 2 bolts and shift cable grommet retainer.

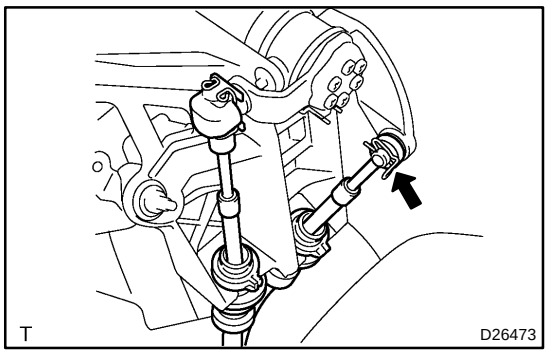

(f) Remove the clip, washer and disconnect the cable end of the shift cable from the shift lever assy.

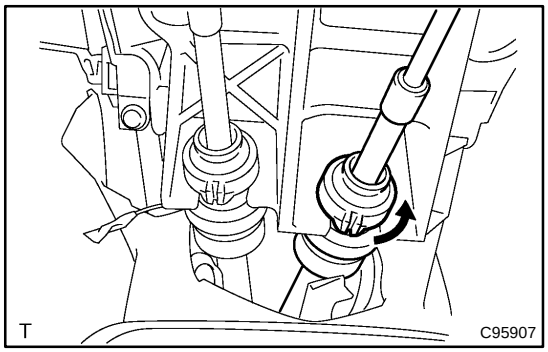

(g) Turn the lock and disconnect the shift cable from the shift lever assy.

(h) Pull out the shift cable from the floor.

9. INSTALL FLOOR SHIFT CABLE TRANSMISSION CONTROL SHIFT

(a) Pull in the shift cable to the floor.

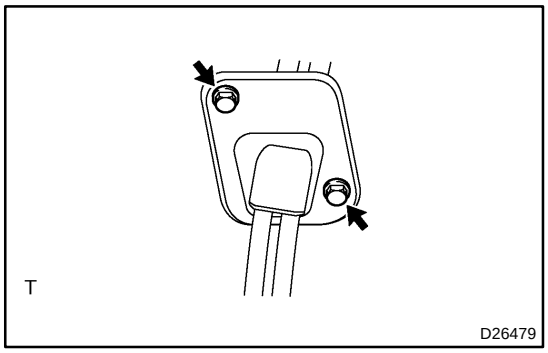

(b) Install the shift cable grommet retainer with the 2 bolts.
Torque: 5.0 N·m (51 kgf·cm, 44 in.·lbf)

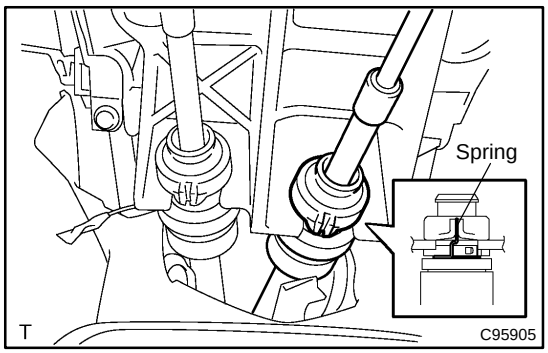

(c) Connect the shift cable to the shift lever assy.

NOTICE:

- **The projecting part of the cable outer should face upward when the shift cable is installed.**
- **Make sure that after installation the cable outer spring is moved to the place shown in the illustration.**

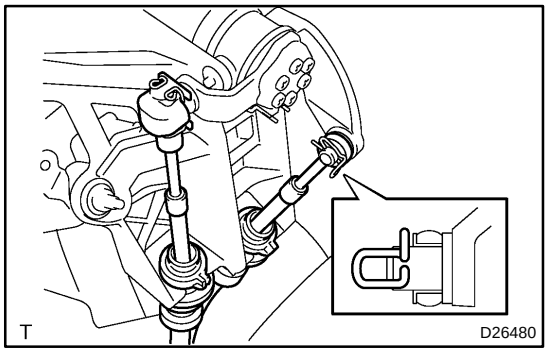

(d) Connect the shift cable end as shown in the illustration.

(e) Install the washer and clip.

(f) Connect the shift cable to the clamp.

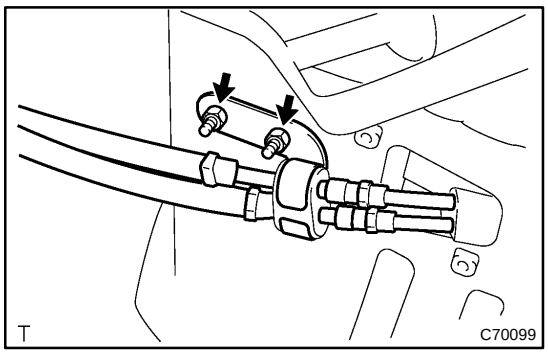

(g) Connect the shift cable with the 2 nuts.
Torque: 5.0 N·m (51 kgf·cm, 44 in.·lbf)

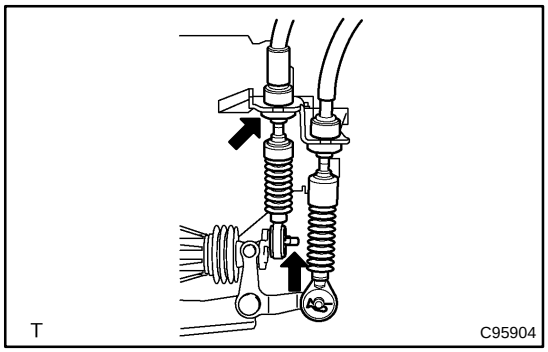

(h) Connect the shift cable with the clip from the bracket.
(i) Connect the shift cable end of the shift cable with the washer and clip to the transaxle.

10. INSTALL AIR BAG SENSOR ASSY CENTER (See page 60–39)
SST 09249–63010

11. INSPECT SRS WARNING LIGHT (See page 05–543)

FLOOR SHIFT SHIFT LEVER ASSY (MTM)

4107S–01

COMPONENTS

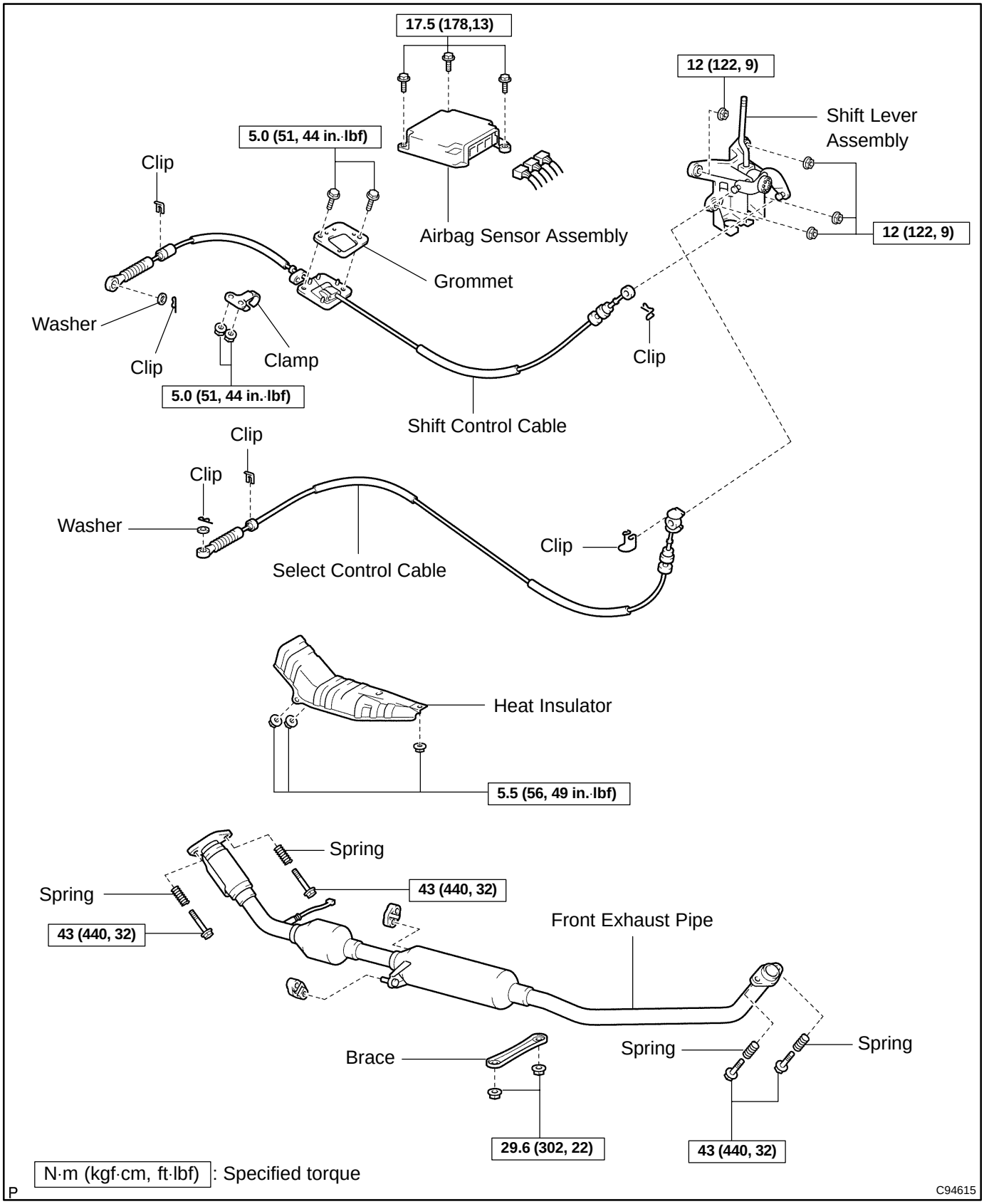

4107T–01

REPLACEMENT

HINT:

COMPONENTS: See page 41–5 or 71–7

1. **REMOVE KNOB SUB–ASSY, SHIFT LEVER**
2. **REMOVE INSTRUMENT CLUSTER FINISH PANEL ASSY CTR (See page 71–10)**
3. **REMOVE INSTRUMENT PANEL BOX (See page 71–10)**
4. **REMOVE INSTRUMENT PANEL FINISH PANEL LOWER CENTER (See page 71–10)**

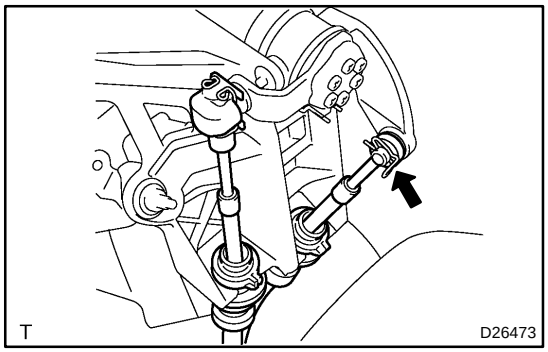

5. DISCONNECT FLOOR SHIFT CABLE TRANSMISSION CONTROL SHIFT

(a) Remove the clip and washer and disconnect the cable end of the shift cable from the shift lever assy.

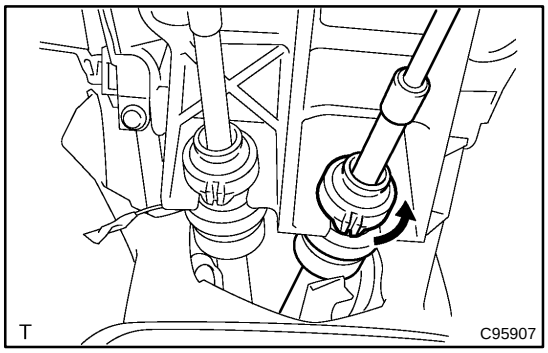

(b) Turn the lock and disconnect the shift cable from the shift lever assy.

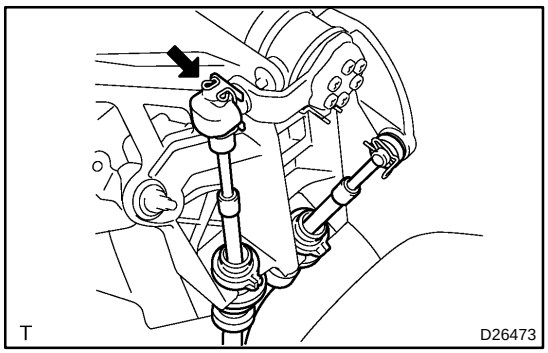

6. DISCONNECT FLOOR SHIFT CABLE TRANSMISSION CONTROL SELECT

(a) Remove the clip and disconnect the cable end of the select cable from the shift lever assy.

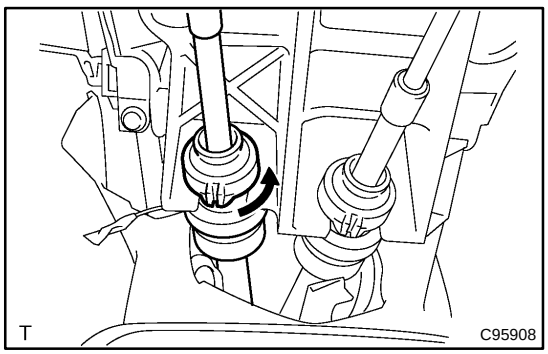

(b) Turn the lock and disconnect the select cable from the shift lever assy.

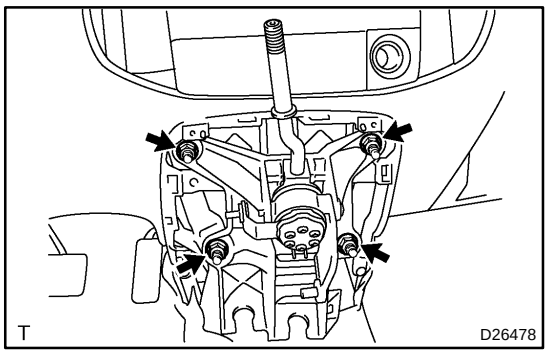

7. REMOVE FLOOR SHIFT SHIFT LEVER ASSY

(a) Remove the 4 nuts and shift lever assy.

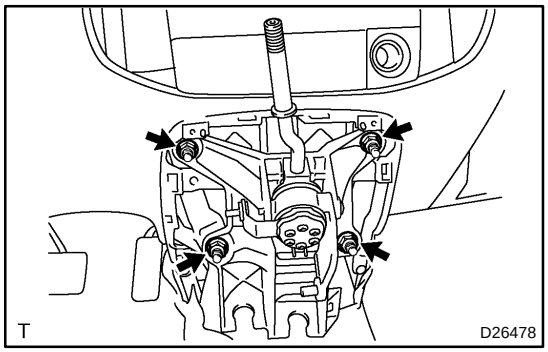

8. INSTALL FLOOR SHIFT SHIFT LEVER ASSY

(a) Install the shift lever assy with the 4 nuts.
Torque: 12 N·m (120 kgf·cm, 9 ft·lbf)

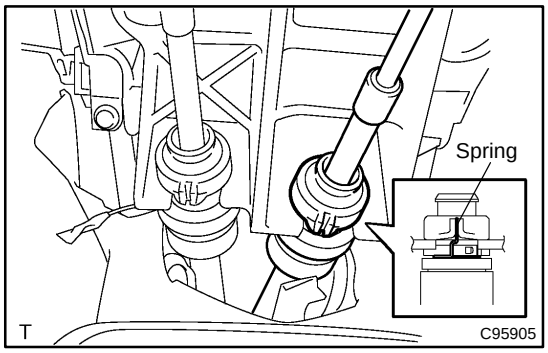

9. CONNECT FLOOR SHIFT CABLE TRANSMISSION CONTROL SHIFT

(a) Connect the shift cable with the clip to the shift lever assy.

NOTICE:

- **The projecting part of the cable outer should face upward when the shift cable is installed.**
- **Make sure that after installation the cable outer spring is moved to the place shown in the illustration.**

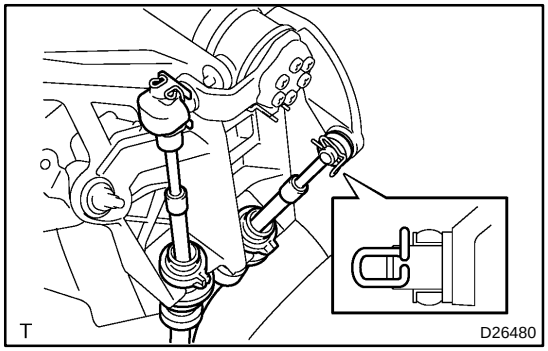

(b) Connect the shift cable end as shown in the illustration.
(c) Install the washer and clip.

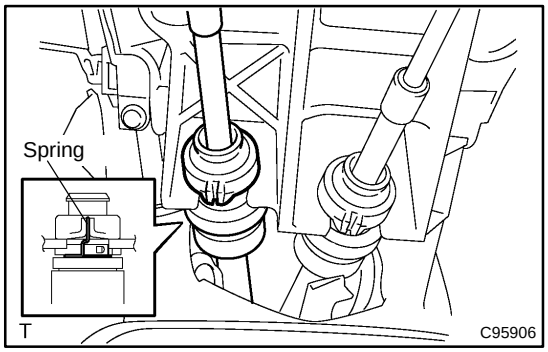

10. CONNECT FLOOR SHIFT CABLE TRANSMISSION CONTROL SELECT

(a) Connect the select cable with the clip to the shift lever assy.

NOTICE:

- **The projecting part of the cable outer should face upward when the shift cable is installed.**
- **Make sure that after installation the cable outer spring is moved to the place shown in the illustration.**

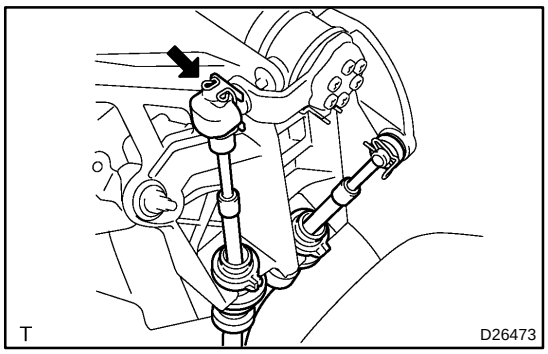

(b) Connect the select cable end with the clip.

42029–03

INSPECTION

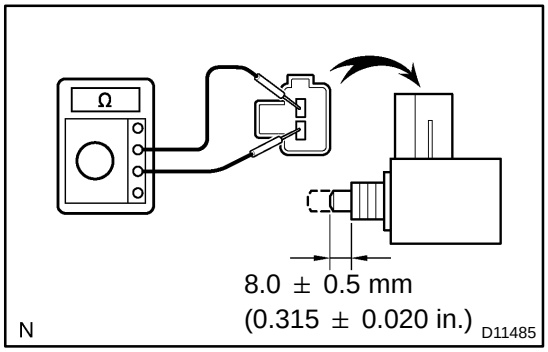

1. INSPECT CLUTCH START SWITCH ASSY

(a) Check the continuity between the terminals when the switch is ON and OFF.

Switch position	Condition
ON (pushed)	Continuity
OFF (free)	No continuity

CLUTCH START SWITCH ASSY (MTM)

42028–03

ON–VEHICLE INSPECTION

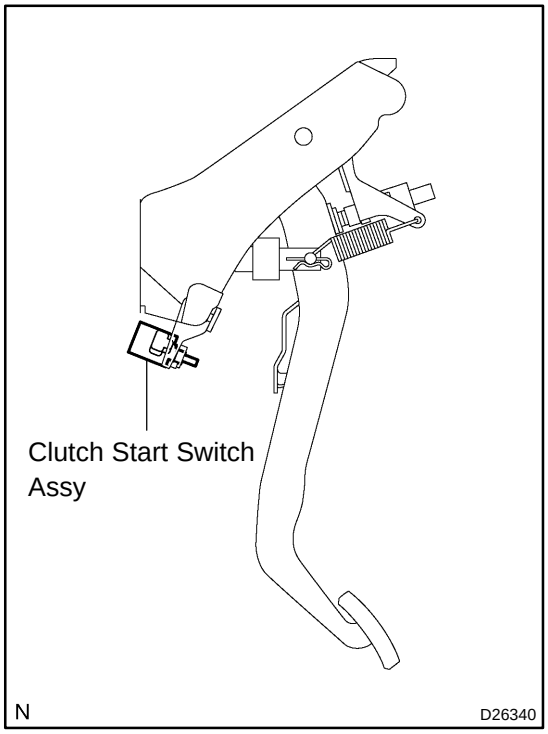

1. CHECK CLUTCH START SYSTEM

(a) Check that the engine does not start when the clutch pedal is released.

(b) Check that the engine starts when the clutch pedal is fully depressed.

If necessary, replace the clutch start switch assy.

42046–01

REPLACEMENT

1. REMOVE CLUTCH START SWITCH ASSY

(a) Disconnect the clutch start switch assy connector.

(b) Remove the nut and clutch start switch assy from the clutch pedal support.

2. INSTALL CLUTCH START SWITCH ASSY

(a) Install the clutch start switch assy with the nut.

Torque: 15.68 N·m (160 kgf·cm, 12 ft·lbf)

(b) Connect the clutch start switch assy connector.

3. INSPECT CLUTCH START SWITCH ASSY (See page 42–22)

CLUTCH RELEASE CYLINDER ASSY (MTM)

42042–01

COMPONENTS

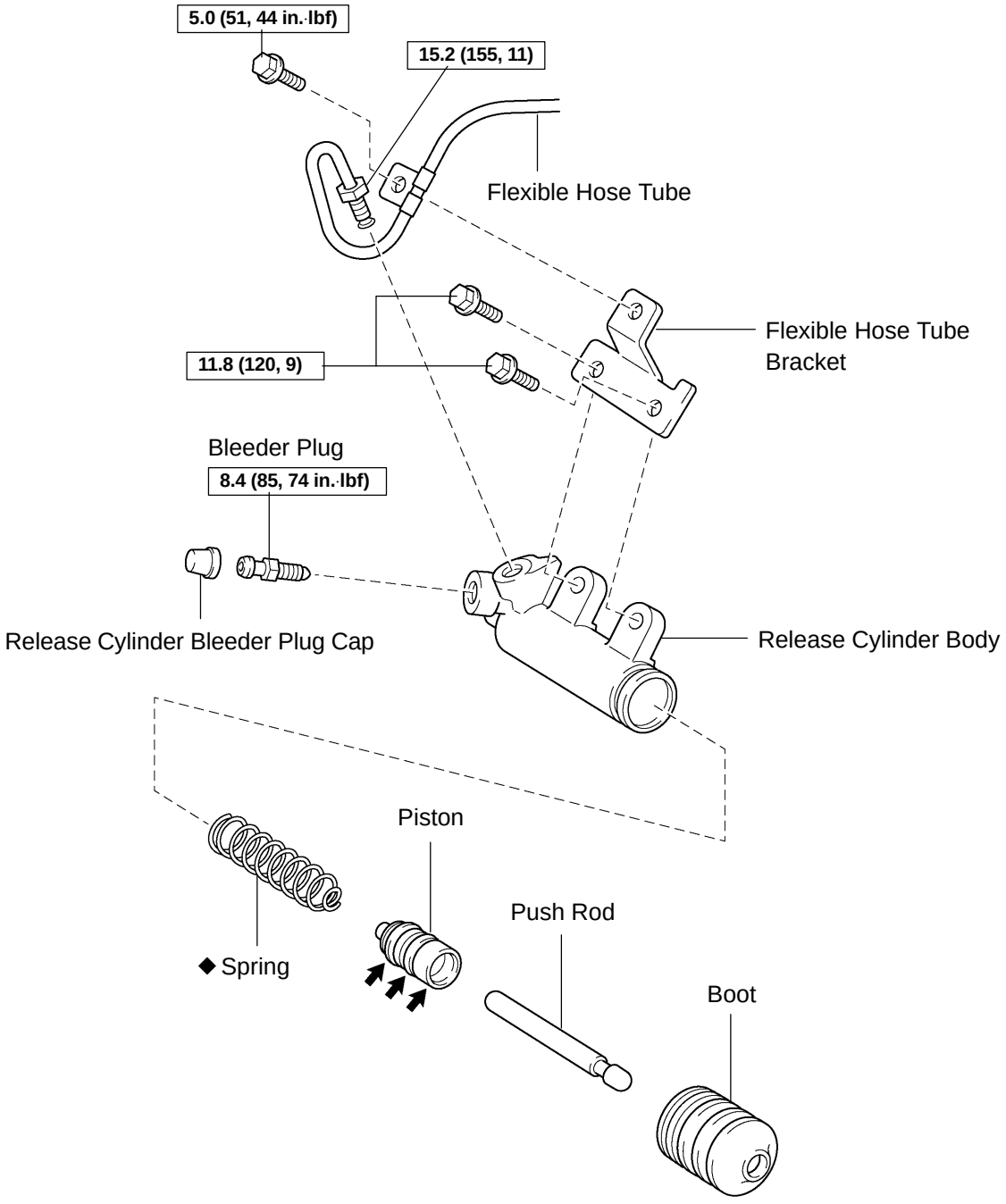

N·m (kgf·cm, ft·lbf) : Specified torque

◆ Non–reusable part

⬅ Lithium soap base glycol grease

N

D11545

42043–01

OVERHAUL

1. DRAIN CLUTCH FLUID

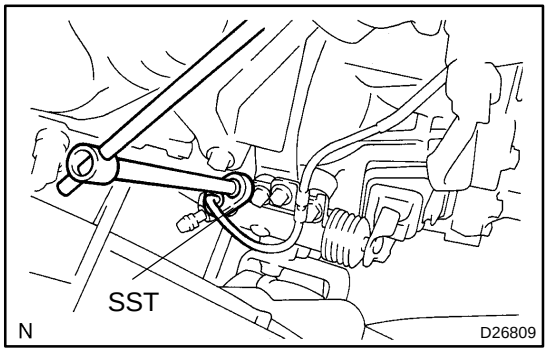

2. DISCONNECT CLUTCH RELEASE CYLINDER TO FLEXIBLE HOSE TUBE

(a) Using SST, disconnect the flexible hose tube.
SST 09023–00100

HINT:

Use a container to catch the fluid.

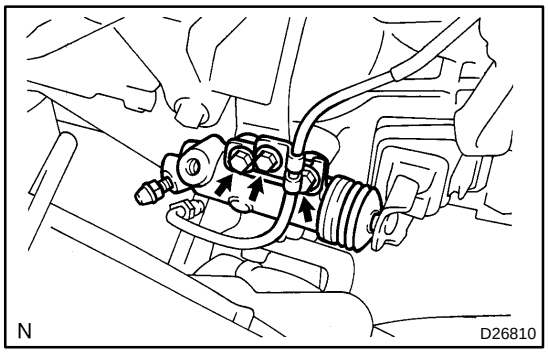

3. REMOVE CLUTCH RELEASE CYLINDER ASSY

(a) Remove the 3 bolts, clutch release cylinder assy and clutch line bracket.

4. REMOVE CLUTCH RELEASE CYLINDER KIT

(a) Remove the boot from the cylinder body.
(b) Remove the push rod from the cylinder body.
(c) Remove the piston from the cylinder body.

NOTICE:

Be careful not to damage the inside of the cylinder body.

(d) Remove the spring from the cylinder body.
(e) Remove the bleeder plug cap from the bleeder plug.

5. REMOVE RELEASE CYLINDER BLEEDER PLUG

6. INSTALL RELEASE CYLINDER BLEEDER PLUG

Torque: 8.4 N·m (85 kgf·cm, 74 in.·lbf)

7. INSTALL CLUTCH RELEASE CYLINDER KIT

(a) Install the bleeder plug cap to the bleeder plug.

(b) Install a new spring to the cylinder body.

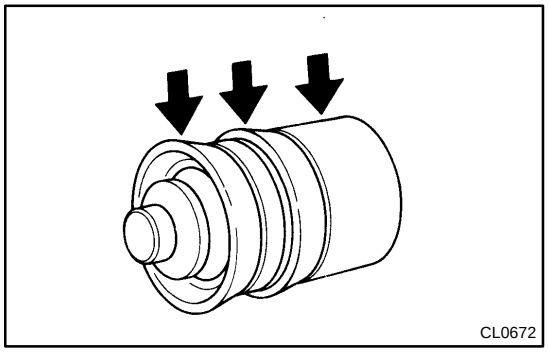

(c) Coat parts with lithium soap base glycol grease, as shown in the illustration.

(d) Install the piston to the cylinder body.

NOTICE:

Be careful not to damage the inside of the cylinder body.

(e) Install the push rod to the cylinder body.

(f) Install the boot to the cylinder body.

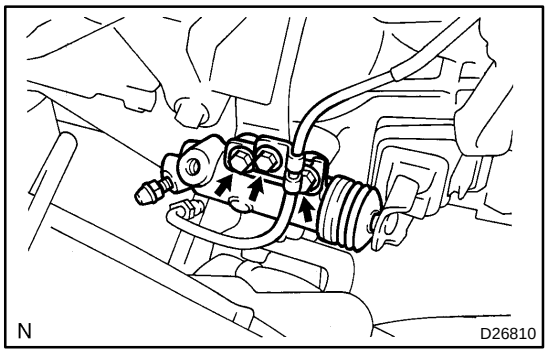

8. INSTALL CLUTCH RELEASE CYLINDER ASSY

(a) Install the clutch release cylinder and clutch line bracket with the 2 bolts.

Torque: 11.8 N·m (120 kgf·cm, 9 ft·lbf)

(b) Install the flexible hose tube with the bolt.

Torque: 5.0 N·m (51 kgf·cm, 44 in.·lbf)

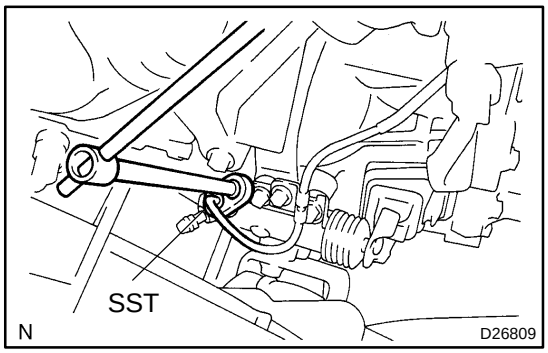

9. CONNECT CLUTCH RELEASE CYLINDER TO FLEXIBLE HOSE TUBE

(a) Using SST, connect the flexible hose tube.

SST 09023–00100

Torque: 15.2 N·m (155 kgf·cm, 11 ft·lbf)

10. BLEED CLUTCH PIPE LINE

(a) Fill the brake reservoir tank with brake fluid and bleed clutch system.

Torque: 8.4 N·m (85 kgf·cm, 74 in.·lbf)

11. CHECK CLUTCH FLUID LEAKAGE

CLUTCH PEDAL SUB–ASSY (MTM)

ADJUSTMENT

4203X–01

1. INSPECT AND ADJUST CLUTCH PEDAL SUB–ASSY

(a) Turn over the floor carpet.

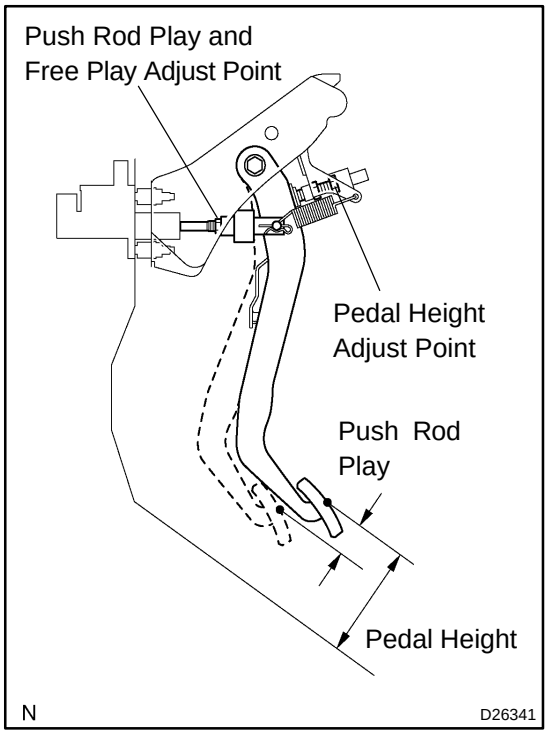

(b) Check that the pedal height is correct.

Pedal height from asphalt sheet:
w/o Turn over:
135.8 – 145.8 mm (5.346 – 5.740 in.)
w/ Turn over:
131.6 – 141.6 mm (5.182 – 5.575 in.)

(c) Adjust the pedal height.

(1) Loosen the lock nut and turn the stopper bolt until the height is correct. Tighten the lock nut.

Torque: 24.5 N·m (245 kgf·cm, 18 ft·lbf)

(d) Check that the pedal free play and push rod play are correct.

(1) Depress the pedal until the clutch resistance begin to be felt.

Pedal free play: 5.0 – 15.0 mm (0.197 – 0591 in.)

(2) Gently depress the pedal until the resistance begins to increase a little.

Push rod play at pedal top:
1.0 – 5.0 mm (0.039 – 0.197 in.)

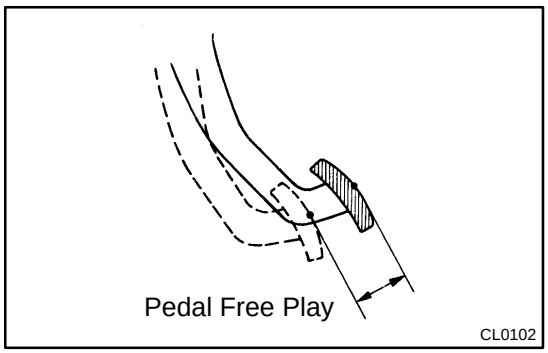

(e) Adjust the pedal free play and push rod play.

(1) Loosen the lock nut and turn the push rod until the free play and push rod play are correct.

(2) Tighten the lock nut.

(3) After adjusting the pedal free play, check the pedal height.

(4) Connect the air duct and install the lower finish panel.

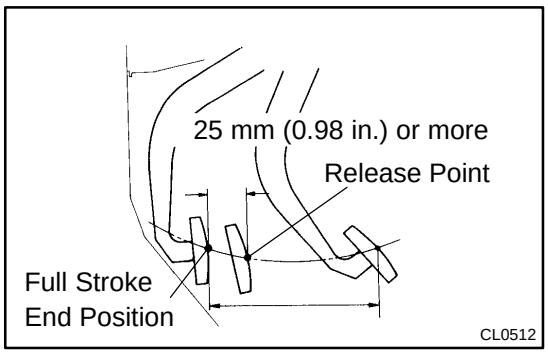

(f) Check the clutch release point.

(1) Pull the parking brake lever and install wheel stopper.

(2) Start the engine and idle the engine.

(3) Without depressing the clutch pedal, slowly shift the shift lever into reverse position until the gears contact.

(4) Gradually depress the clutch pedal and measure the stroke distance from the point that the gear noise stops (release point) up to the full stroke end position.

Standard distance: 25 mm (0.98 in.) or more
(From pedal stroke end position to release point)

If the distance is not as specified, perform the following operations.

- Check pedal height.
- Check push rod play and pedal free play.
- Bleed the clutch line.
- Check the clutch cover assy and disc assy.

4203Y–01

COMPONENTS

w/o Turn Over:

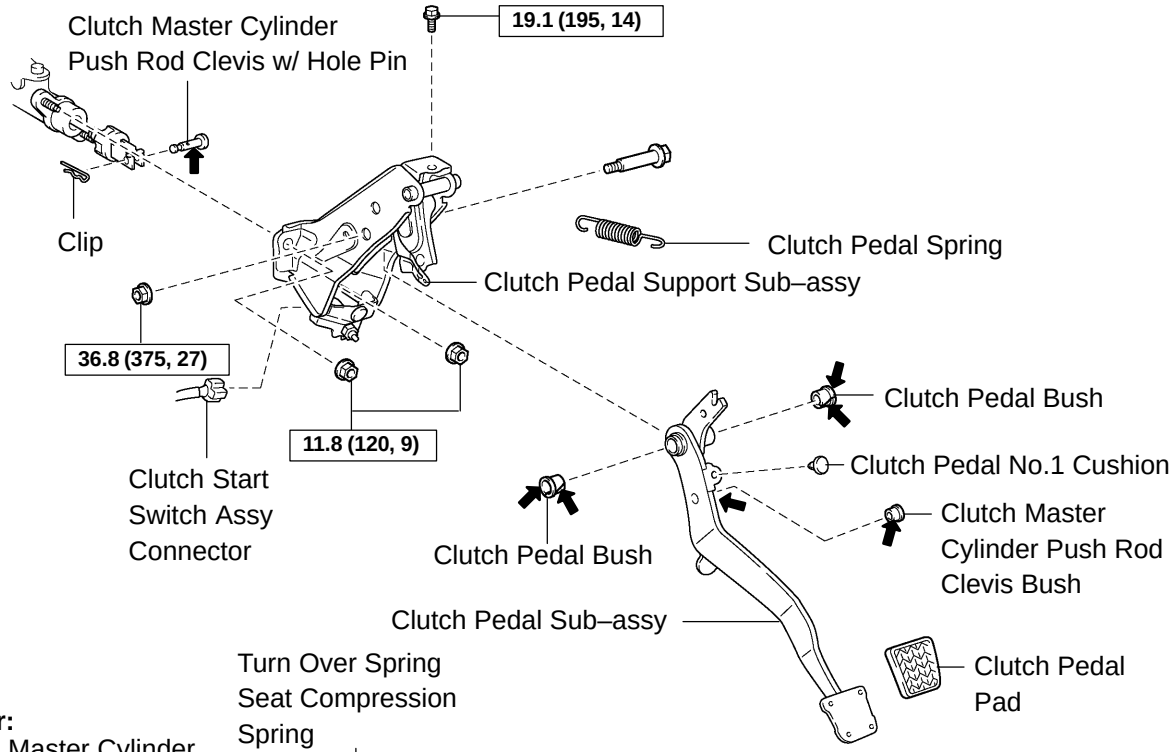

w/ Turn Over:

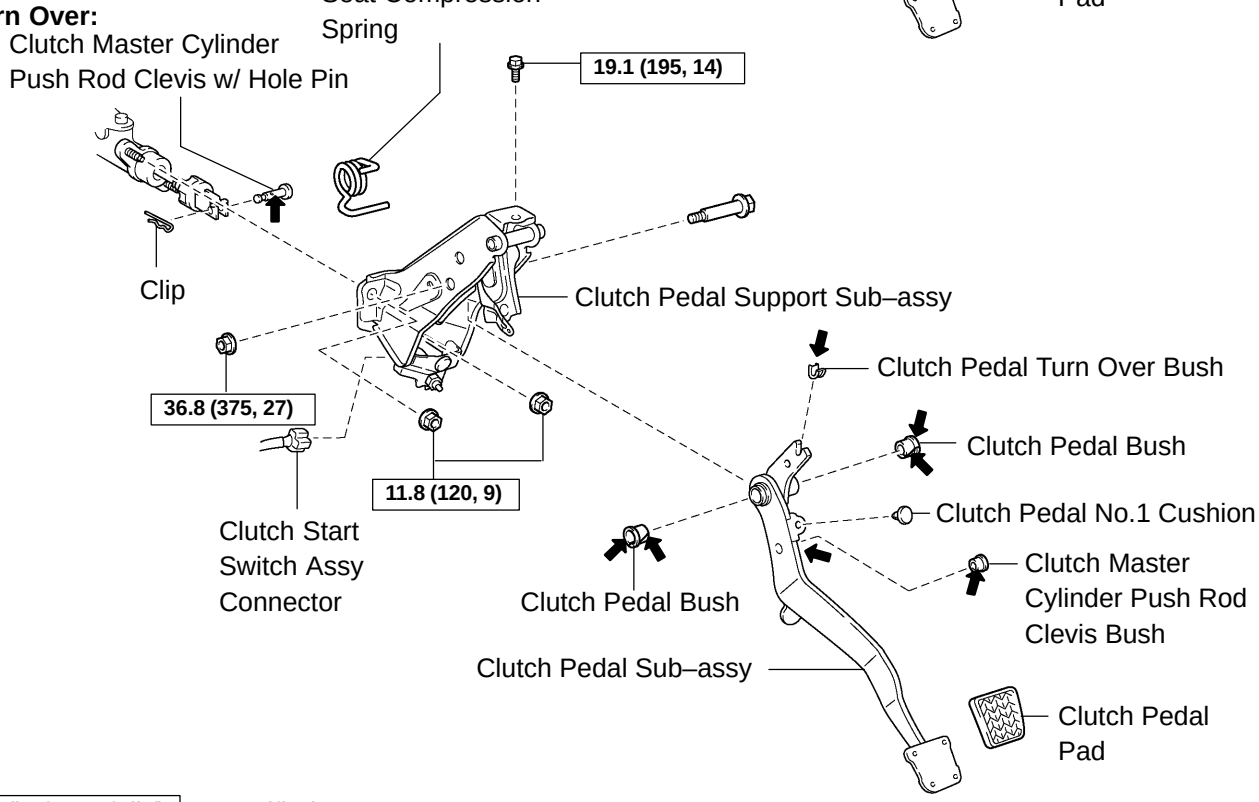

N·m (kgf·cm, ft·lbf) : Specified torque

◆ Non–reusable part

⬅ MP Grease

N

D26330

4203Z–01

REPLACEMENT

1. **REMOVE INSTRUMENT PANEL SUB–ASSY LOWER (See page 71–10)**
2. **REMOVE CLUTCH PEDAL SPRING (W/O TURN OVER)**

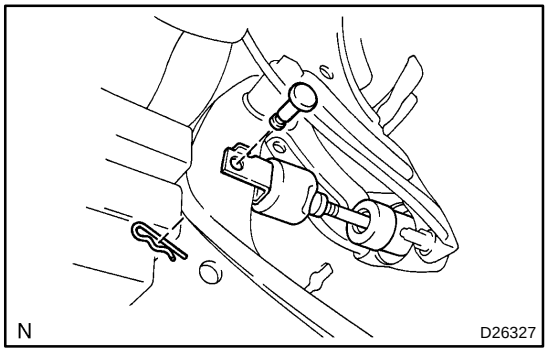

3. **REMOVE CLUTCH MASTER CYLINDER PUSH ROD CLEVIS W/HOLE PIN**

(a) Remove the clip and hole pin.

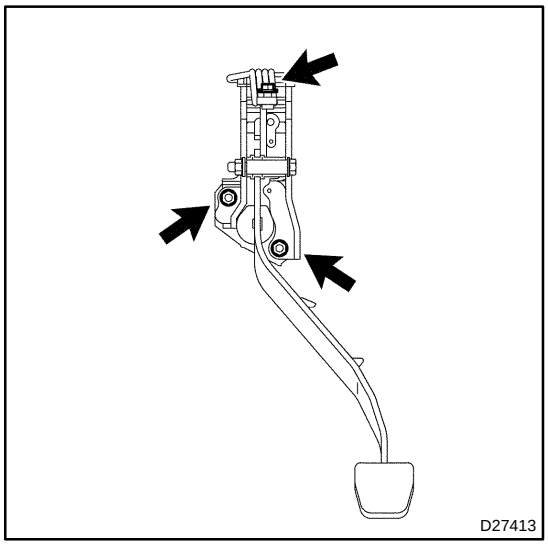

4. **REMOVE CLUTCH PEDAL SUPPORT SUB–ASSY**

(a) w/ Cruise control:
Disconnect the clutch switch assy connector.
(b) Disconnect the clutch start switch assy connector.
(c) Remove the 2 nuts, bolt and clutch pedal support assy.

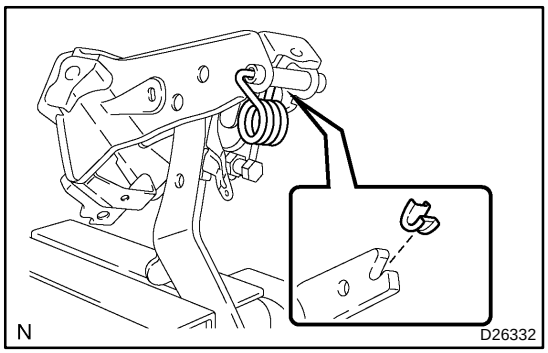

5. **REMOVE TURN OVER SPRING SEAT COMPRESSION SPRING (W/ TURN OVER)**

(a) Mount the clutch pedal in a soft jaw vise.
(b) Using a screwdriver, remove the spring.

6. **REMOVE CLUTCH PEDAL TURNOVER BUSH (W/ TURN OVER)**

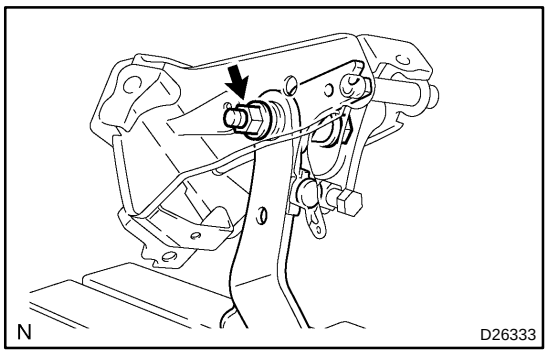

7. REMOVE CLUTCH PEDAL SUB–ASSY

(a) Remove the bolt and nut.

(b) Remove the clutch pedal sub–assy from the clutch pedal support.

8. REMOVE CLUTCH PEDAL PAD

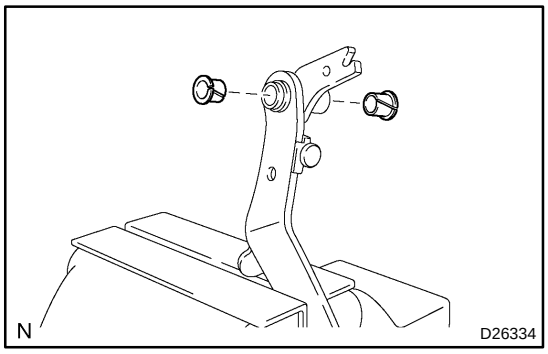

9. REMOVE CLUTCH PEDAL BUSH

(a) Remove the 2 bushes from the clutch pedal.

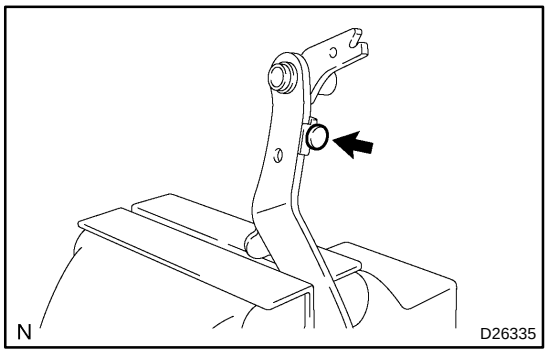

10. REMOVE CLUTCH PEDAL NO.1 CUSHION

(a) Using needle–nose pliers, remove the No.1 cushion from the clutch pedal.

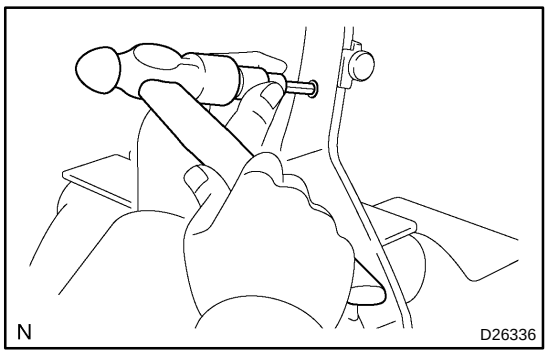

11. REMOVE CLUTCH MASTER CYLINDER PUSH ROD CLEVIS BUSH

(a) Using a 8 mm hexagon wrench and a hammer, remove the clevis bush from the clutch pedal sub–assy.

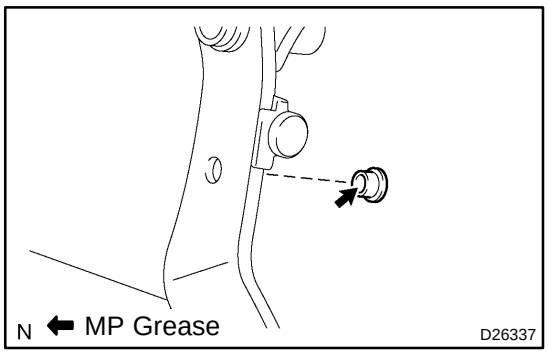

12. INSTALL CLUTCH MASTER CYLINDER PUSH ROD CLEVIS BUSH

(a) Apply MP grease to inside of a new clevis bush.

(b) Install the clevis bush to the clutch pedal.

HINT:

Install the clevis bush from the right side of the vehicle.

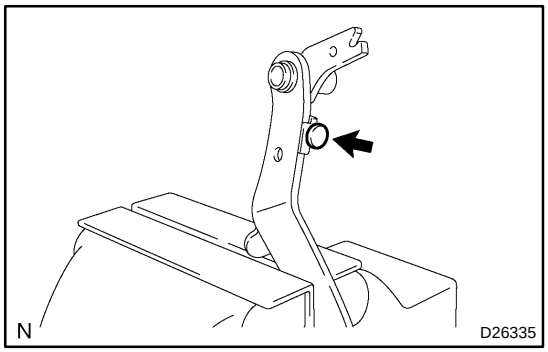

13. INSTALL CLUTCH PEDAL NO.1 CUSHION

(a) Using needle–nose pliers, install the No.1 cushion to the clutch pedal.

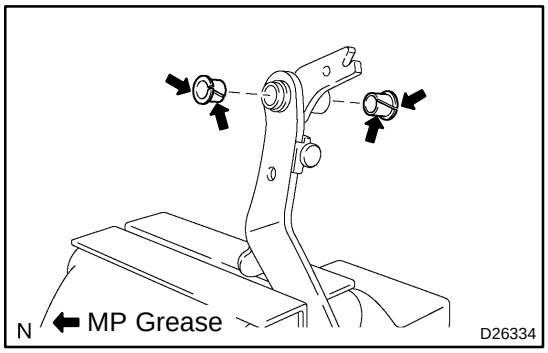

14. INSTALL CLUTCH PEDAL BUSH

(a) Apply MP grease to both side of 2 new bushes.

(b) Install the 2 bushes to the clutch pedal.

15. INSTALL CLUTCH PEDAL PAD

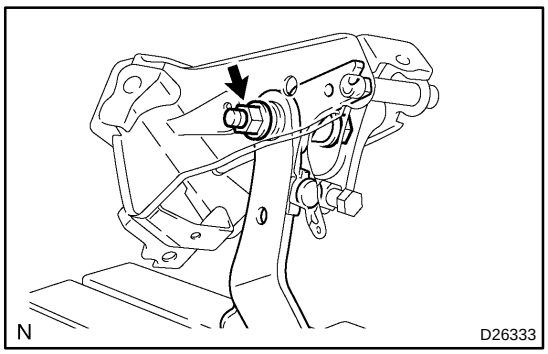

16. INSTALL CLUTCH PEDAL SUB–ASSY

(a) Install the clutch pedal sub–assy to the clutch pedal support with the bolt and nut.

Torque: 36.8 N·m (375 kgf·cm, 27 ft·lbf)

HINT:

Install the bolt from the right side of the vehicle.

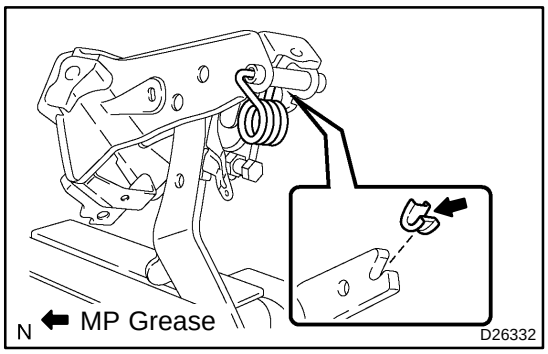

17. INSTALL CLUTCH PEDAL TURNOVER BUSH (W/ TURN OVER)

(a) Apply MP grease to inside of the turn over bush.

(b) Install the turn over bush to the clutch pedal sub–assy.

18. INSTALL TURN OVER SPRING SEAT COMPRESSION SPRING (W/ TURN OVER)

(a) Apply MP grease to the contact surface of the bush and spring.

(b) Install the spring to the clutch pedal sub–assy and clutch pedal support.

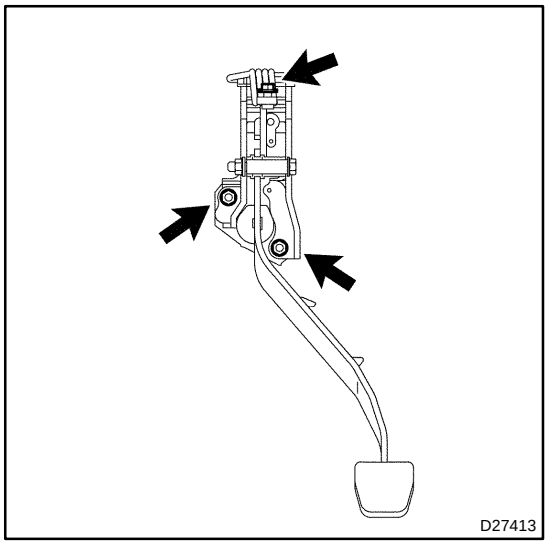

19. INSTALL CLUTCH PEDAL SUPPORT SUB–ASSY

(a) Install the clutch pedal support to the vehicle with the 2 nuts and bolt.

Torque:
Bolt: 19.1 N·m (195 kgf·cm, 14 ft·lbf)
Nut: 11.8 N·m (120 kgf·cm, 9 ft·lbf)

(b) Connect the clutch start switch assy connector.

(c) w/ Cruise control:
Connect the clutch switch assy connector.

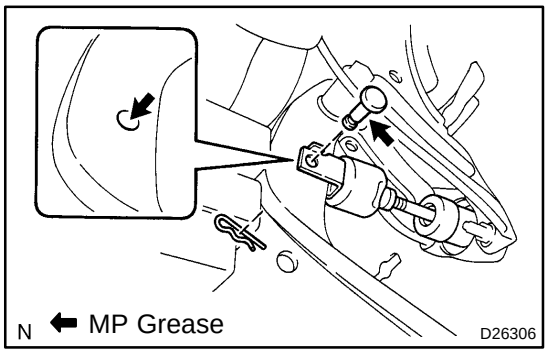

20. INSTALL CLUTCH MASTER CYLINDER PUSH ROD CLEVIS W/HOLE PIN

(a) Apply MP grease to the contact surface of the hole pin and clevis bush.

(b) Connect the clevis to the clutch pedal sub–assy with the hole pin.

HINT:
Install the hole pin from the right side of the vehicle.

(c) Install the clip to the hole pin.

21. INSTALL CLUTCH PEDAL SPRING (W/O TURN OVER)

22. INSTALL INSTRUMENT PANEL SUB–ASSY LOWER

23. INSPECT SRS WARNING LIGHT (See page 05–543)

24. INSPECT AND ADJUST CLUTCH PEDAL SUB–ASSY (See page 42–2)

CLUTCH UNIT (MTM)

42044–01

COMPONENTS

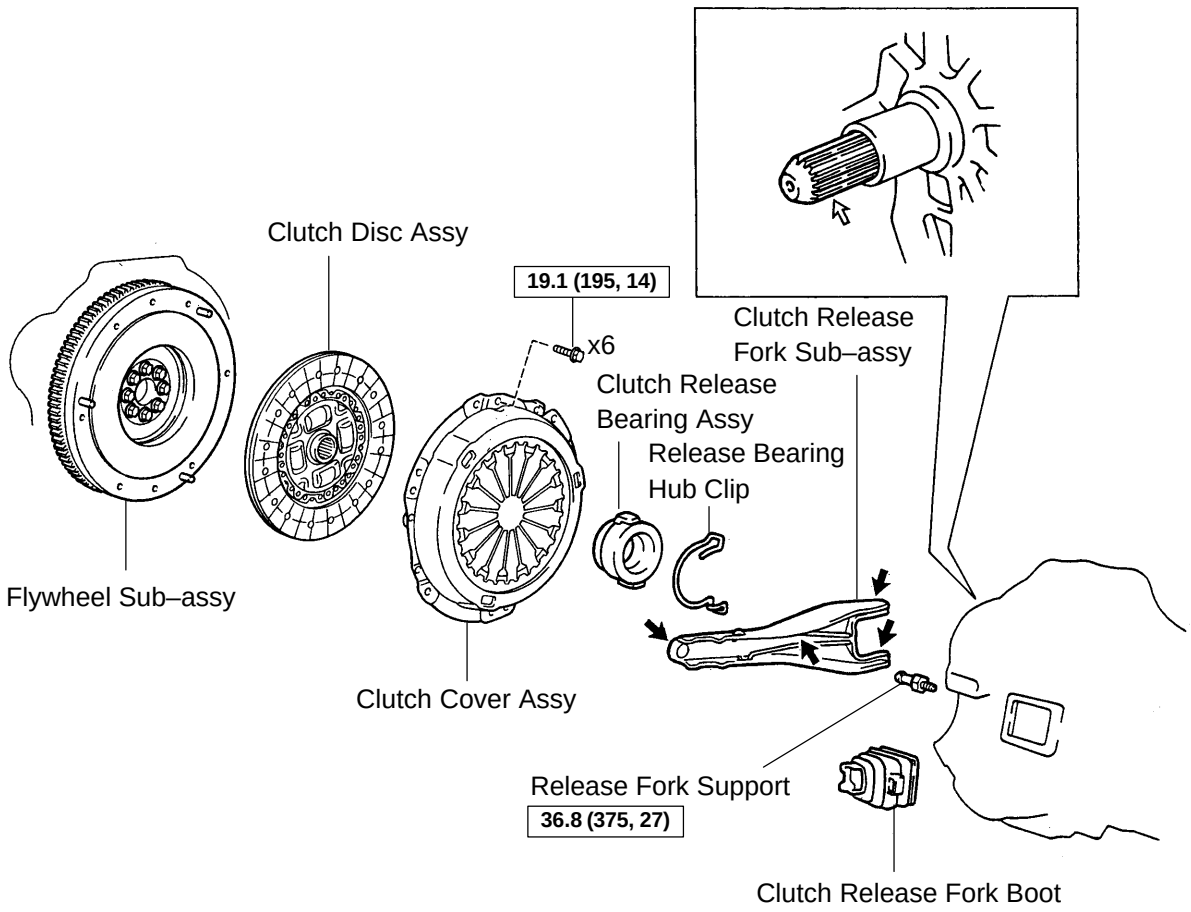

N·m (kgf·cm, ft·lbf) : Specified torque
◆ Non–reusable part
⇦ Clutch spline grease
⬅ Release hub grease

D26321

42045–01

OVERHAUL

1. REMOVE MANUAL TRANSAXLE ASSY (See page 41–29 or 41–66)

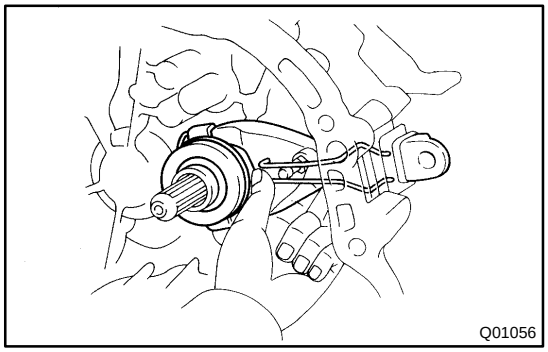

2. REMOVE CLUTCH RELEASE FORK SUB–ASSY

(a) Remove the clutch release fork with clutch release bearing from the transaxle assy.

3. REMOVE CLUTCH RELEASE BEARING ASSY

(a) Remove the clutch release bearing assy from the clutch release fork.

4. REMOVE RELEASE FORK SUPPORT

(a) Remove the release fork support from the transaxle assy.

5. REMOVE RELEASE BEARING HUB CLIP

6. REMOVE CLUTCH RELEASE FORK BOOT

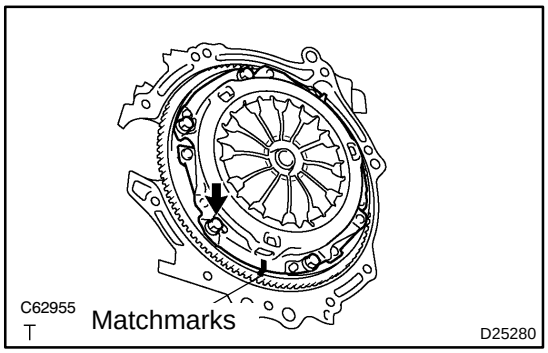

7. REMOVE CLUTCH COVER ASSY

(a) Align the matchmarks on the clutch cover assy with the one on the flywheel sub–assy.

(b) Loosen each set bolt one turn at a time until spring tension is released.

(c) Remove the 6 bolts, and pull off the clutch cover assy.

NOTICE:

Do not drop the clutch disc assy.

8. REMOVE CLUTCH DISC ASSY

NOTICE:

Keep the lining part of the clutch disc assy, the pressure plate and surface of the flywheel sub–assy away from oil and foreign attachment.

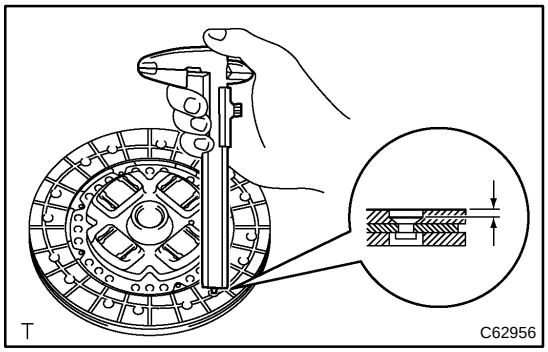

9. INSPECT CLUTCH DISC ASSY

(a) Using vernier calipers, measure the rivet head depth.

Maximum rivet depth: 0.3 mm (0.012 in.)

If necessary, replace the clutch disc assy.

(b) Install the clutch disc assy to the transaxle assy.

NOTICE:

Take care not to insert the clutch disc assy in the wrong direction.

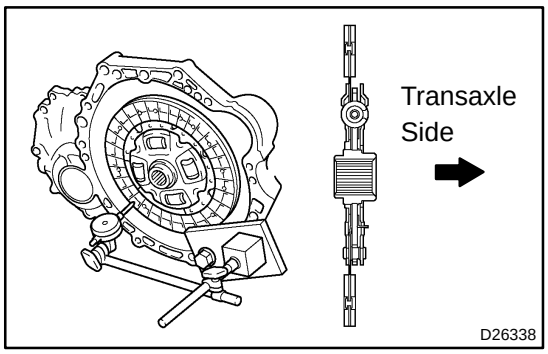

(c) Using a dial indicator, check the clutch disc assy runout.
Minimum runout: 0.8 mm (0.031 in.)

If necessary, replace the clutch disc assy.

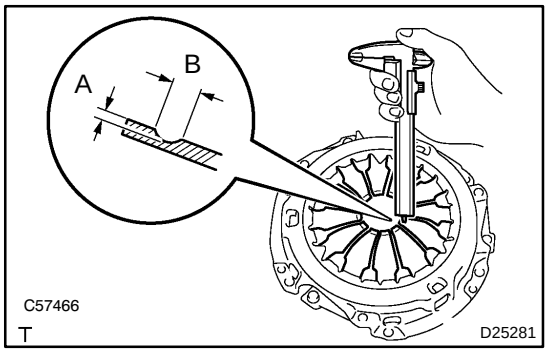

10. INSPECT CLUTCH COVER ASSY

(a) Using vernier calipers, inspect the diaphragm spring for depth and width of wear.
Minimum:
A (Depth): 0.5 mm (0.020 in.)
B (Width): 6.0 mm (0.236 in.)

If necessary, replace clutch cover assy.

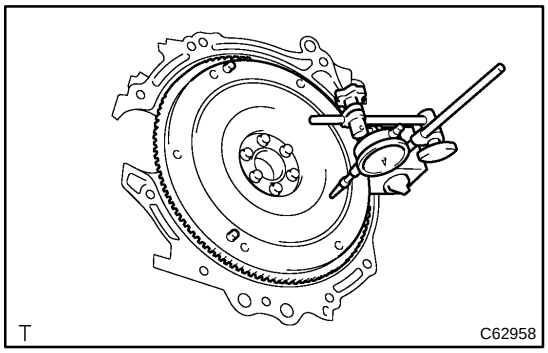

11. INSPECT FLYWHEEL SUB–ASSY

(a) Using a dial indicator, inspect the flywheel sub–assy run-out.
Maximum runout: 0.1 mm (0.004 in.)

If necessary, replace the flywheel sub–assy.

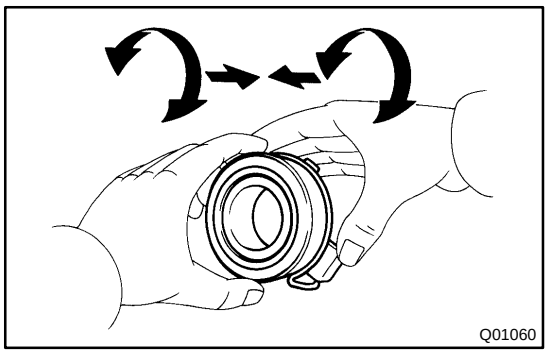

12. INSPECT CLUTCH RELEASE BEARING ASSY

(a) Turn the release bearing by hand while applying force in the axial direction.

HINT:

The bearing is permanently lubricated and requires no cleaning or lubrication.

If necessary, replace the release bearing assy.

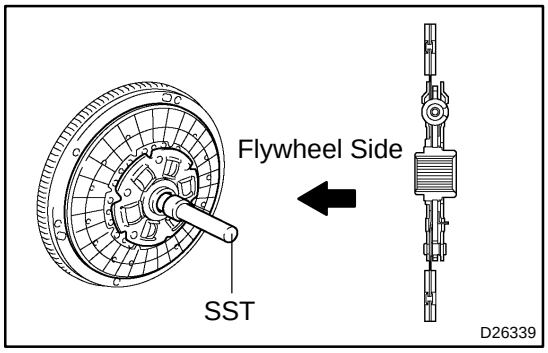

13. INSTALL CLUTCH DISC ASSY

(a) Insert SST in the clutch disc assy, then insert them in the flywheel sub–assy.
SST 09301–00210

NOTICE:

Take care not to insert clutch disc assy in the wrong direction.

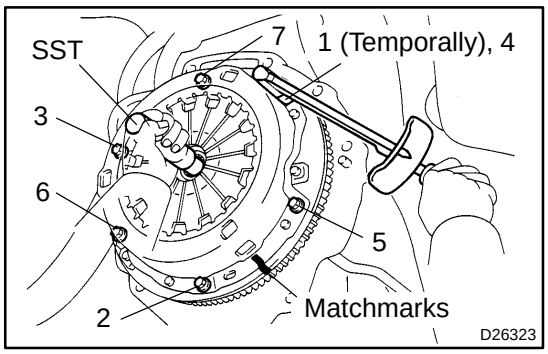

14. INSTALL CLUTCH COVER ASSY

(a) Align the matchmarks on the clutch cover assy and flywheel sub–assy.

(b) Following the procedures shown in the illustration, tighten the 6 bolts, in the order starting the bolt locating near the knock pin on the top.

Torque: 19.1 N·m (195 kgf·cm, 14 ft·lbf)

HINT:

- Following the order in the illustration, tighten the bolts at a time evenly.
- Move SST up and down, right and left lightly, after checking that the disc is in the center, tighten the bolts.

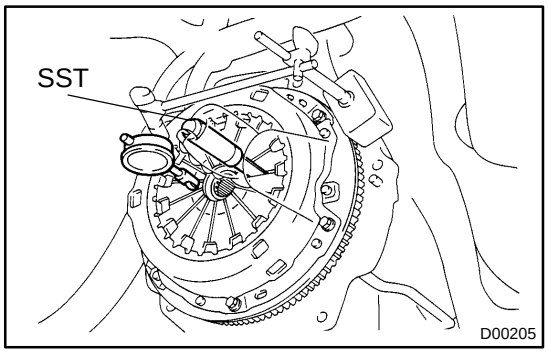

15. INSPECT AND ADJUST CLUTCH COVER ASSY

(a) Using a dial indicator with roller instrument, check the diaphragm spring tip alignment.

Maximum non–alignment: 0.5 mm (0.020 in.)

If alignment is not as specified, using SST, adjust the diaphragm spring tip alignment.

SST 09333–00013

16. INSTALL RELEASE FORK SUPPORT

(a) Install the release fork support to the transaxle assy.

Torque: 36.8 N·m (375 kgf·cm, 27 ft·lbf)

17. INSTALL RELEASE BEARING HUB CLIP

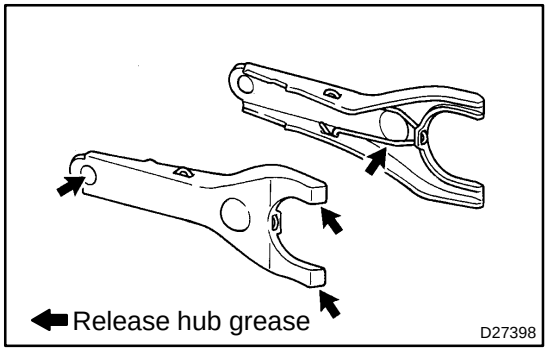

18. INSTALL CLUTCH RELEASE FORK SUB–ASSY

(a) Apply release hub grease to the release fork and release bearing assy contact, release fork and push rod contact and release fork pivot points.

Sealant:

Part No. 08887–01806, RELEASE HUB GREASE or equivalent

(b) Install the release fork to the release bearing assy.

19. INSTALL CLUTCH RELEASE BEARING ASSY

(a) Apply the clutch spline grease to the input shaft spline.

Sealant:

Part No. 08887–01706, CLUTCH SPLINE GREASE or equivalent

(b) Install the bearing to the release fork, and then install them to the transaxle assy.

NOTICE:

After the installation, move the folk forward and backward to check that the release bearing slides smoothly.

20. INSTALL CLUTCH RELEASE FORK BOOT

21. INSTALL MANUAL TRANSAXLE ASSY (See page 41–29 or 41–66)

CLUTCH SYSTEM (MTM)

4203W–01

PROBLEM SYMPTOMS TABLE

HINT:

Use the table below to help you find the cause of the problem. The numbers indicate the priority of the likely cause of the problem. Check each part in order. If necessary, replace these parts.

Symptom	Suspect Area	See page
Clutch grabs/chatters	5. Engine mounting (Loosen)	–
	6. Clutch disc assy (Runout is excessive)	42–18
	7. Clutch disc assy (Oily)	42–18
	8. Clutch disc assy (Worn out)	42–18
	9. Clutch disc torsion rubber (Damaged)	42–18
	10. Clutch disc assy (Glazed)	42–18
	11. Diaphragm spring (Out of tip alignment)	42–18
Clutch pedal spongy	1. Clutch Line (Air in line)	–
	2. Master cylinder cup (Damaged)	42–10
	3. Release cylinder rubber (Damaged)	42–15
Clutch noisy	1. Clutch release bearing assy (Worn, dirty, or damaged)	42–15
	2. Clutch disc torsion rubber (Damaged)	42–18
Clutch slips	1. Clutch pedal (Free play out of adjustment)	42–2
	2. Clutch disc assy (Oily)	42–18
	3. Clutch disc assy (Worn out)	42–18
	4. Diaphragm spring (Damaged)	42–18
	5. Pressure plate (Distortion)	42–18
	6. Flywheel sub–assy (Distortion)	–
Clutch does not disengage	1. Clutch pedal (Free play out of adjustment)	42–2
	2. Clutch line (Air in line)	–
	3. Master cylinder cup (Damaged)	42–10
	4. Release cylinder cup (Damaged)	42–15
	5. Clutch disc assy (Out of true)	42–18
	6. Clutch disc assy (Runout of excessive)	42–18
	7. Clutch disc assy (Lining broken)	42–18
	8. Clutch disc assy (Dirty or burned)	42–18
	9. Clutch disc assy (Oily)	42–18
	10. Clutch disc assy (Lack of spline grease)	42–18

CLUTCH MASTER CYLINDER ASSY (MTM)

42040–01

COMPONENTS

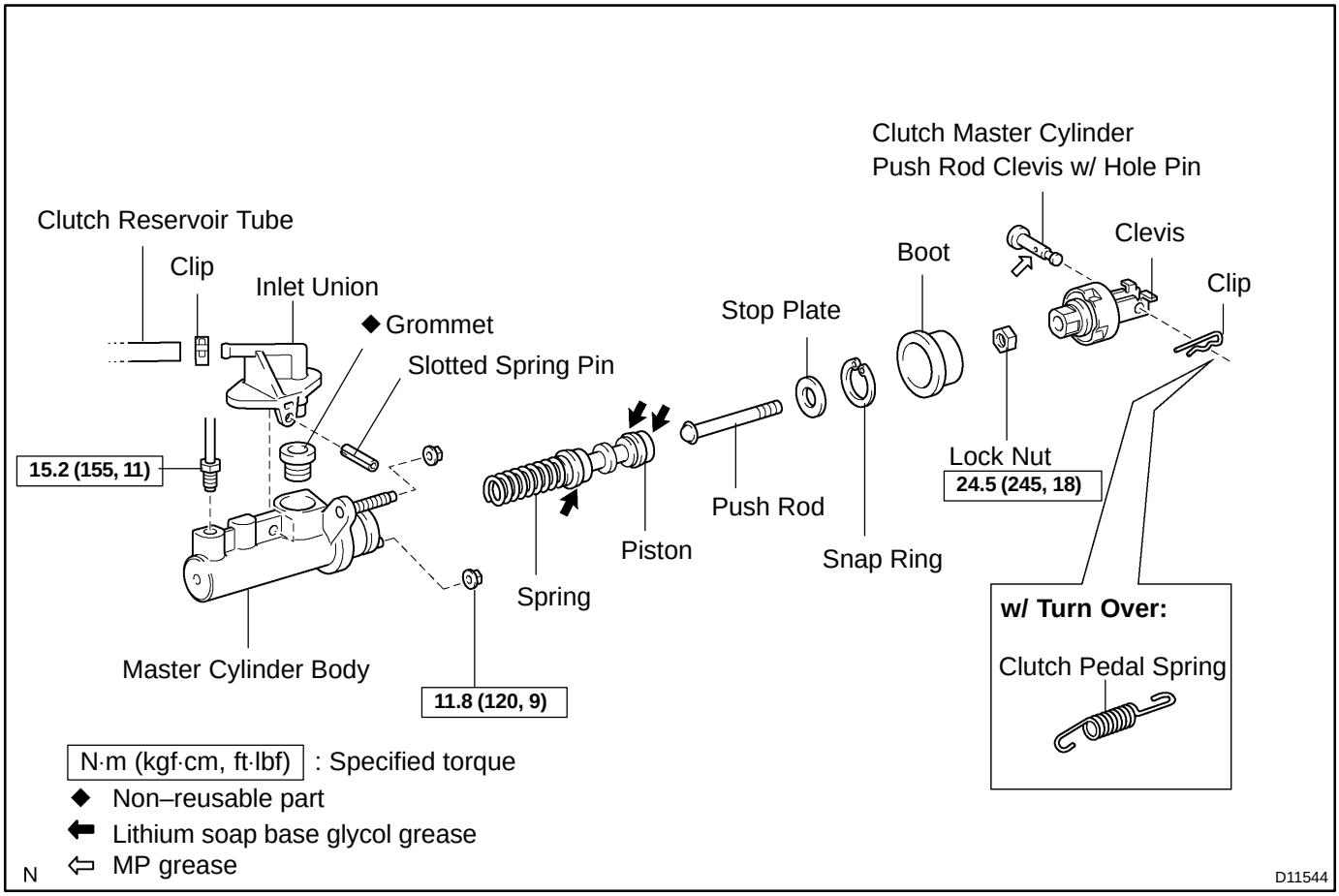

OVERHAUL

1. **DRAIN CLUTCH FLUID**
2. **REMOVE BRAKE MASTER CYLINDER SUB–ASSY (See page 32–15)**
3. **REMOVE BRAKE BOOSTER ASSY (See page 32–22)**

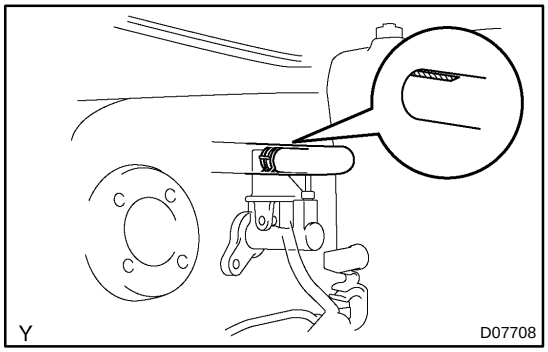

4. **DISCONNECT CLUTCH RESERVOIR TUBE**

(a) Loosen the clip and disconnect the clutch reservoir tube from the clutch master cylinder assy.

HINT:
Use a container to catch the fluid.

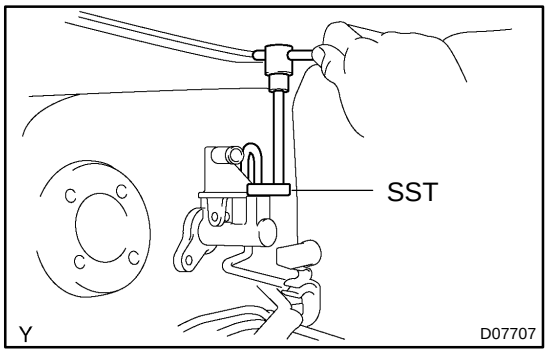

5. **DISCONNECT CLUTCH MASTER CYLINDER TO FLEXIBLE HOSE TUBE**

(a) Using SST, disconnect the flexible hose tube.
SST 09023–00100

HINT:
Use a container to catch the fluid.

6. **REMOVE CLUTCH PEDAL SPRING (W/O TURN OVER)**

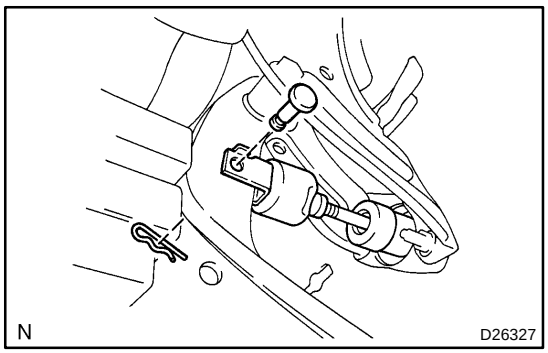

7. **REMOVE CLUTCH MASTER CYLINDER PUSH ROD CLEVIS W/HOLE PIN**

(a) Remove the clip and hole pin.

8. **REMOVE CLUTCH MASTER CYLINDER ASSY**

(a) Remove the 2 nuts and clutch master cylinder assy.

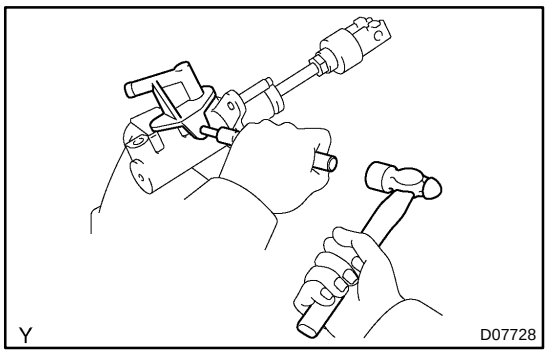

9. REMOVE CLUTCH MASTER CYLINDER KIT

(a) Using a pin punch and a hammer, drive out the slotted spring pin.
(b) Remove the inlet union and grommet.
(c) Loosen the lock nut, and remove the clevis.
(d) Remove the lock nut from the push rod.
(e) Remove the boot from the cylinder body.

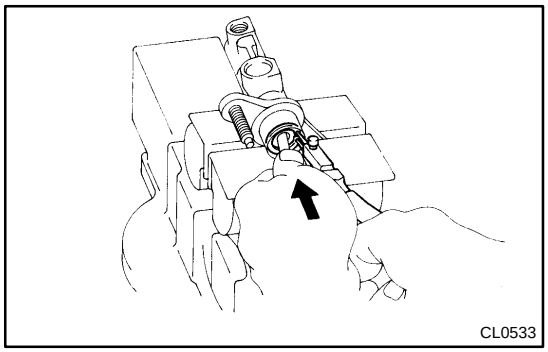

(f) While pushing the push rod, using snap ring pliers, remove the snap ring.
(g) Remove the push rod from the cylinder body.

NOTICE:

The piston may pop up out of the cylinder body. Therefore, slowly remove the push rod from the cylinder body.

(h) Remove the stop plate from the push rod.
(i) Remove the piston with spring from the cylinder.

NOTICE:

Be careful not to damage the inside of the cylinder body.

10. INSTALL CLUTCH MASTER CYLINDER KIT

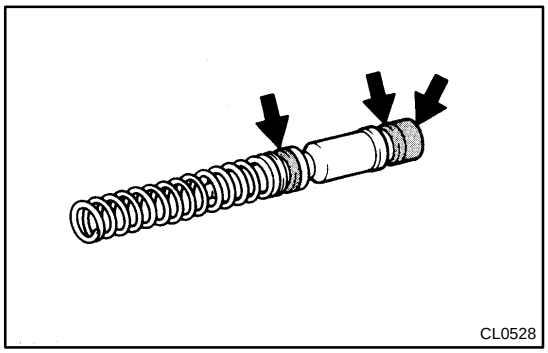

(a) Coat parts with lithium soap base glycol grease, as shown in the illustration.
(b) Install the piston with spring into the cylinder.

NOTICE:

Be careful not to damage the inside of the cylinder body.

(c) Install the stop plate to the push rod.
(d) Install the push rod to the cylinder body.

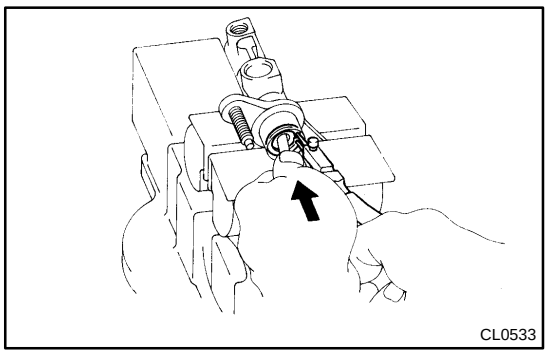

(e) While pushing the push rod, using snap ring pliers, install the snap ring.
(f) Install the boot to the cylinder body.
(g) Install the lock nut to the push rod.
(h) Temporarily install the clevis with the lock nut to the push rod.
(i) Install the inlet union and a new grommet.

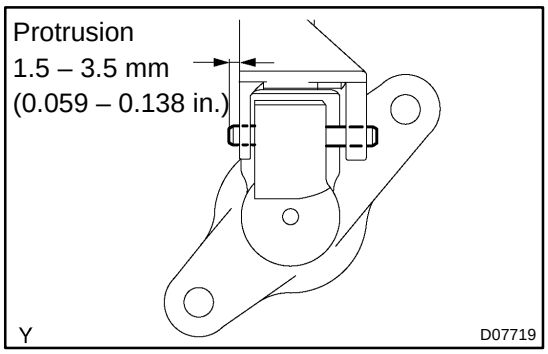

(j) Using a pin punch and a hammer, drive in the slotted spring pin.

11. INSTALL CLUTCH MASTER CYLINDER ASSY

(a) Install the clucth master cylinder assy with the 2 nuts.
Torque: 11.8 N·m (120 kgf·cm, 9 ft·lbf)

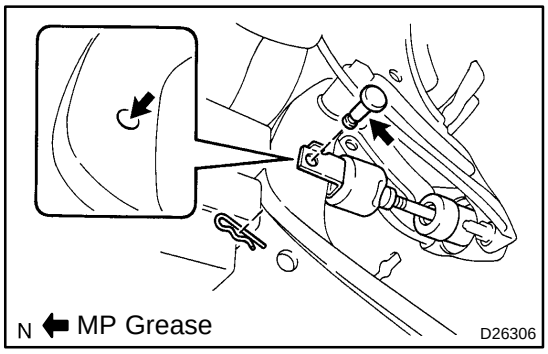

12. INSTALL CLUTCH MASTER CYLINDER PUSH ROD CLEVIS W/HOLE PIN

(a) Apply MP grease to the contact surface of the hole pin and clevis bush.

(b) Connect the clevis to the clutch pedal sub–assy with the hole pin.

HINT:

Install the hole pin from the right side of the vehicle.

(c) Install the clip to the hole pin.

13. INSTALL CLUTCH PEDAL SPRING (W/O TURN OVER)

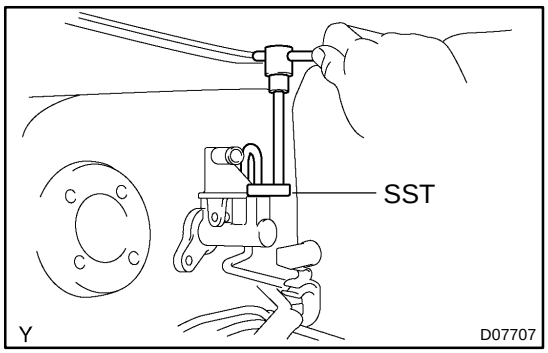

14. CONNECT CLUTCH MASTER CYLINDER TO FLEXIBLE HOSE TUBE

(a) Using SST, connect the flexible hose tube.
SST 09023–00100
Torque: 15.2 N·m (155 kgf·cm, 11 ft·lbf)

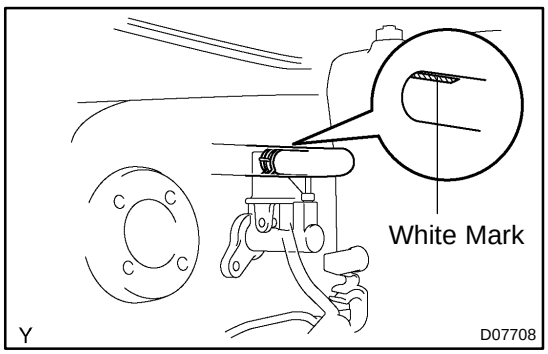

15. CONNECT CLUTCH RESERVOIR TUBE

(a) Connect the clutch reservoir tube with the clip to the clutch master cylinder assy.

NOTICE:

Facing the white mark upward.

16. INSTALL BRAKE BOOSTER ASSY (See page 32–22)
17. INSTALL BRAKE MASTER CYLINDER SUB–ASSY (See page 32–15)
18. BLEED BRAKE LINE (See page 32–6)
19. BLEED CLUTCH PIPE LINE
(a) Fill the brake reservoir tank with clutch fluid and bleed clutch system.
Torque: 8.4 N·m (85 kgf·cm, 73 in.·lbf)
20. CHECK AND ADJUST BRAKE PEDAL HEIGHT (See page 32–8)
21. INSPECT AND ADJUST CLUTCH PEDAL SUB–ASSY (See page 42–2)
22. CHECK BRAKE FLUID LEAKAGE
23. CHECK CLUTCH FLUID LEAKAGE
24. CHECK FLUID LEVEL IN RESERVOIR

5000P–04

ON–VEHICLE INSPECTION

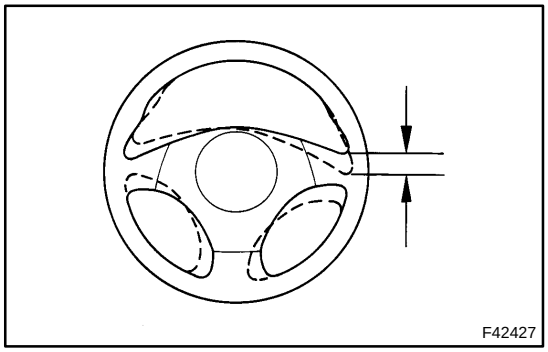

1. CHECK STEERING WHEEL FREEPLAY

(a) Stop the vehicle and face the tires straight ahead.

(b) Rock the steering wheel gently up and down by your hand, check the steering wheel freeplay.

Maximum freeplay: 30 mm (1.18 in.)

STEERING SYSTEM

50040–01

PRECAUTION

1. HANDLING PRECAUTIONS ON STEERING SYSTEM

(a) Care must be taken when replacing parts. Incorrect replacement may affect the performance of the steering system and result in a driving hazard.

2. HANDLING PRECAUTIONS ON SRS AIRBAG SYSTEM

(a) The vehicle is equipped with SRS (Supplemental Restraint System) such as the driver airbag and front passenger airbag. Failure to carry out service operation in the correct sequence could cause the SRS to unexpectedly deploy during servicing, possibly leading to a serious accident. Before servicing (including removal or installation of parts, inspection or replacement), be sure to read the precautionary notice for the supplemental restraint system (See page 60–1).

5002P–03

PROBLEM SYMPTOMS TABLE

Use the table below to help you find the cause of the problem. The numbers indicate the probability of the cause of the problem. Check each part in the order shown. If necessary, repair or replace these parts.

Symptom	Suspect Area	See page
Hard steering	1. Tires (Improperly inflated)	28–1
	2. Power steering fluid level (Low)	51–3
	3. Front wheel alignment (Incorrect)	26–6
	4. Steering system joints (Worn)	–
	5. Suspension arm ball joints (Worn)	26–20
	6. Steering column (Binding)	–
	7. Power steering vane pump	51–8
	8. Power steering gear	51–22
Poor return	1. Tires (Improperly inflated)	28–1
	2. Front wheel alignment (Incorrect)	26–6
	3. Steering column (Binding)	–
	4. Power steering gear	51–22
Excessive play	1. Steering system joints (Worn)	–
	2. Suspension arm ball joints (Worn)	26–20
	3. Intermediate shaft, Sliding yoke (Worn)	–
	4. Front wheel bearing (Worn)	30–56
	5. Power steering gear	51–22
Abnormal noise	1. Power steering fluid level (Low)	51–3
	2. Steering system joints (Worn)	–
	3. Power steering vane pump	51–8
	4. Power steering gear	51–22

5002Q–03

REPAIR

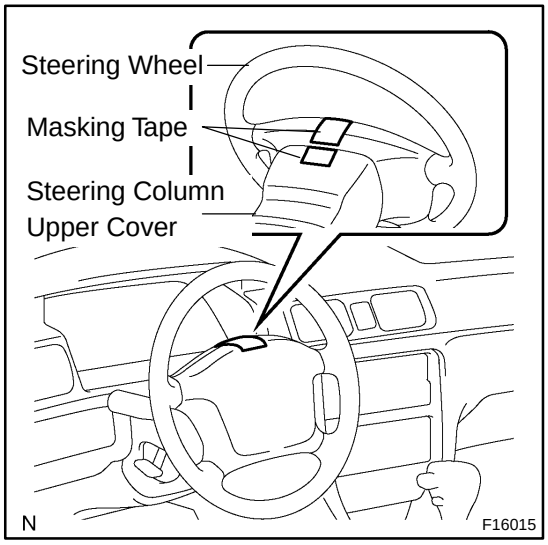

1. STEERING OFF CENTER REPAIR PROCEDURE

(a) Inspect steering wheel off center.

(1) Apply masking tape on the top center of the steering wheel and steering column upper cover.

(2) Driving the vehicle a straight line for 100 meters at a constant speed of 35 mph (56 km/h), and hold the steering wheel to maintain the course.

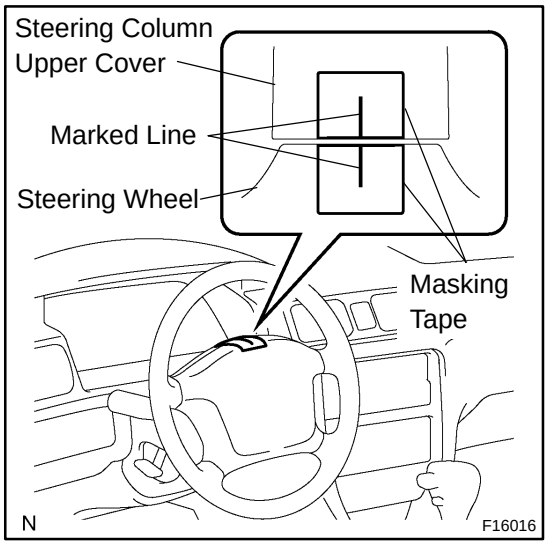

(3) Draw a line on the masking tape as shown in the illustration.

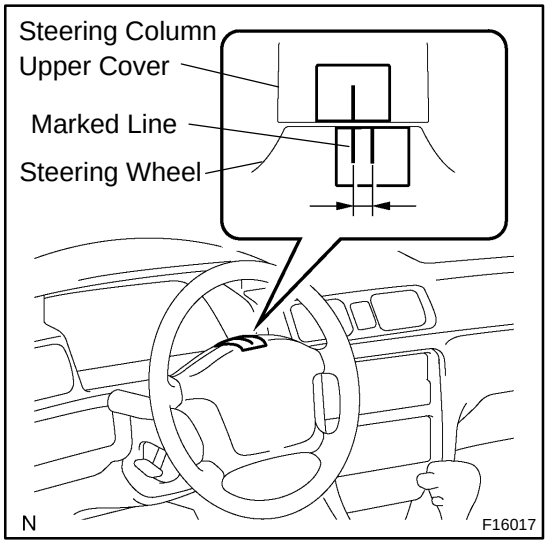

(4) Turn the steering wheel to its straight position.

HINT:

Refer to the upper surface of the steering wheel, steering spoke and SRS airbag line for the straight position.

(5) Draw a new line on the masking tape or the steering wheel as shown in the illustration.

(6) Measure the distance between the 2 lines on the masking tape of the steering wheel.

(7) Convert the measured distance to steering angle.
Measured distance 1 mm (0.04 in.) = Steering angle approximately 1 deg.

HINT:
Make a note of the steering angle.

(b) Adjust steering angle.

NOTICE:
The adjustment method for steering angle varies depending on the models. Check whether it is type A or B.

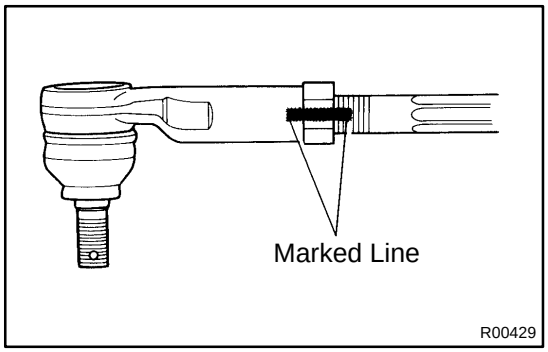

(1) Draw a line on the RH and LH tie rod and rack ends where it can easily be seen.
(2) Using a paper gauge, measure the distance from RH and LH tie rod ends to the rack end screws.

HINT:
- Measure the RH side and LH side.
- Make a note of the measured values.

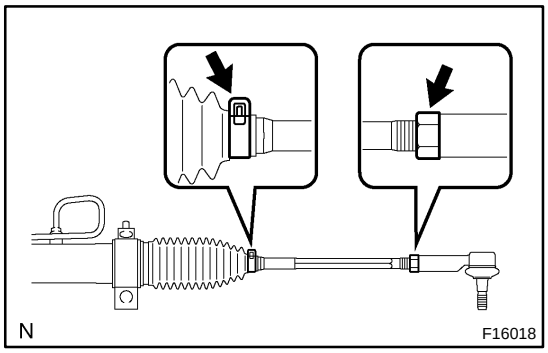

(3) Remove the RH and LH boot clips from the rack boots.
(4) Loosen the RH and LH lock nuts.
(5) Turn the RH and LH rack end by the same amount (but in different directions) according to the steering angle.
1 turn 360 deg. of rack end (1.5 mm (0.059 in.) horizontal movement) – 12 deg. of steering angle.
(6) Tighten the RH and LH lock nuts by the specified torque.
Torque: 74 N·m (750 kgf·cm, 54 ft·lbf)

NOTICE:
Make sure that the difference in length between RH and LH tie rod ends and rack end screws are within 1.5 mm (0.059 in.).

(7) Install the RH and LH boot clips.

STEERING COLUMN ASSY

COMPONENTS

50041–01

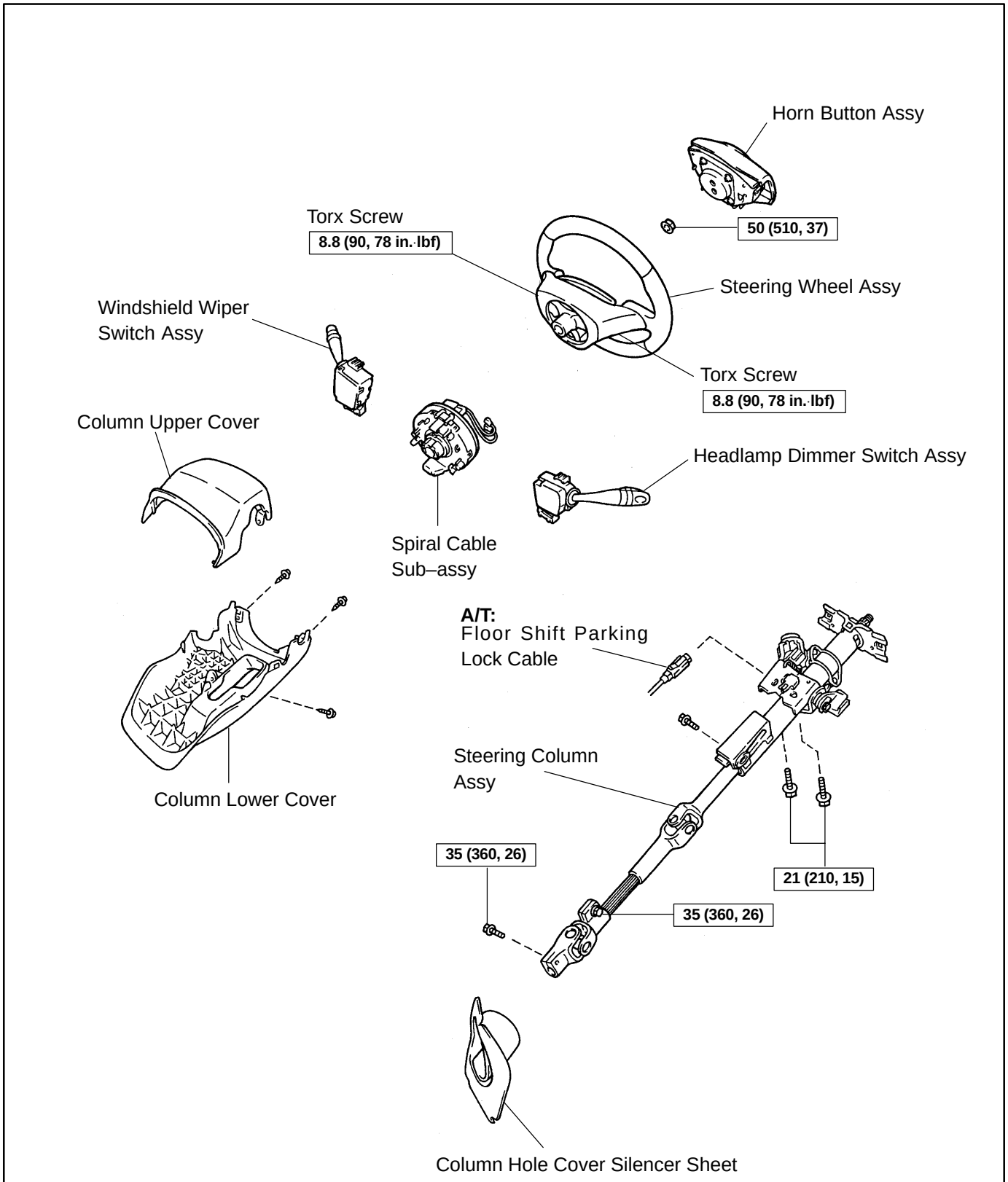

N·m(kgf·cm, ft·lbf) : Specified torque

N

F42414

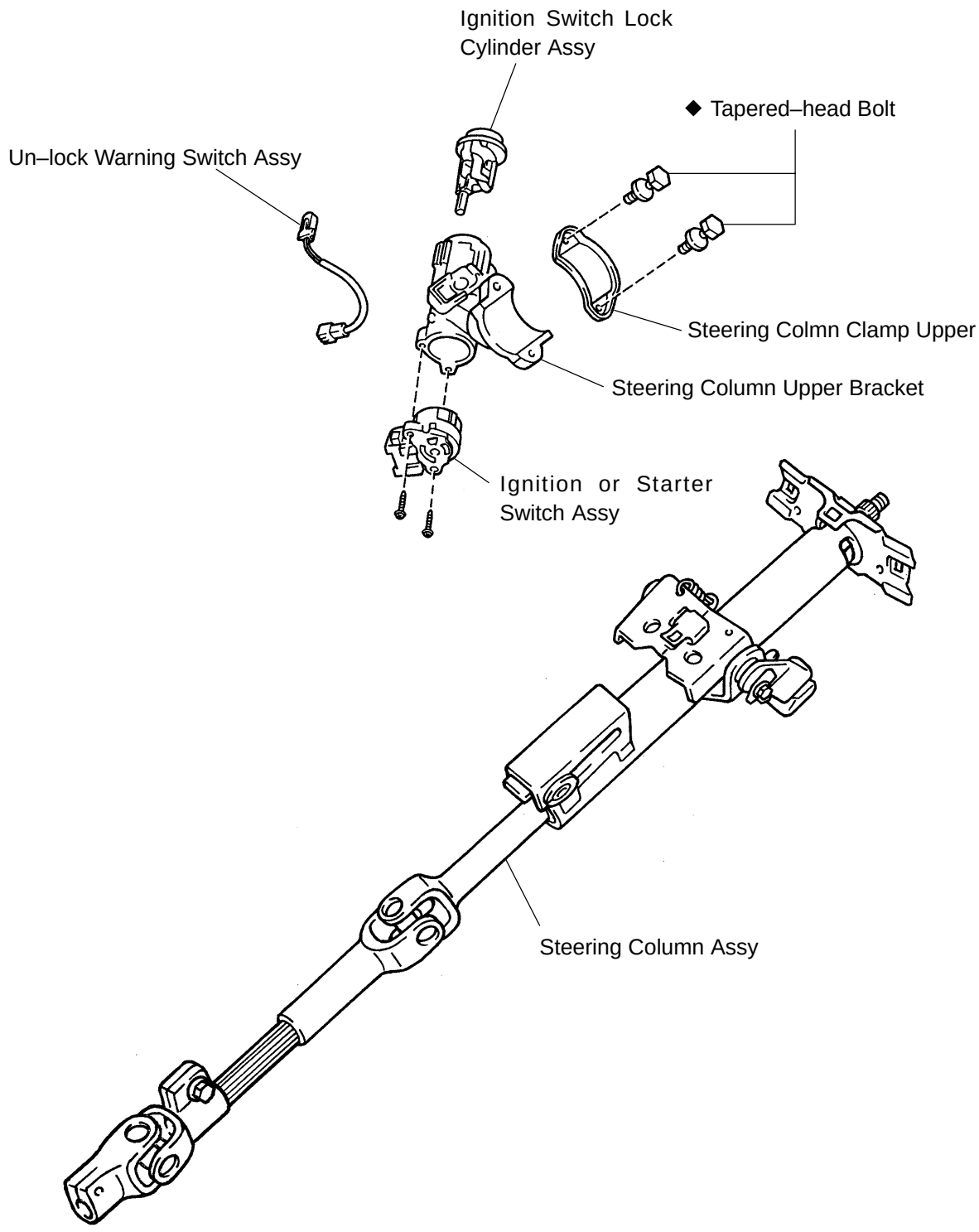

◆ Non–reusable part

N

F42415

50042–01

OVERHAUL

1. PRECAUTION

2. DISCONNECT BATTERY NEGATIVE TERMINAL

3. INSPECT PLACE FRONT WHEELS FACING STRAIGHT AHEAD

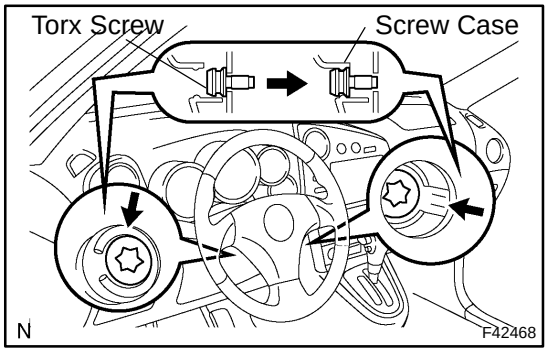

4. REMOVE HORN BUTTON ASSY

NOTICE:

If the airbag connector is disconnected with the ignition switch being at ON, DTCs will be recorded.

(a) Using a torx socket wrench, loosen the 2 torx screws until the groove along the screw circumference catches on the screw case.

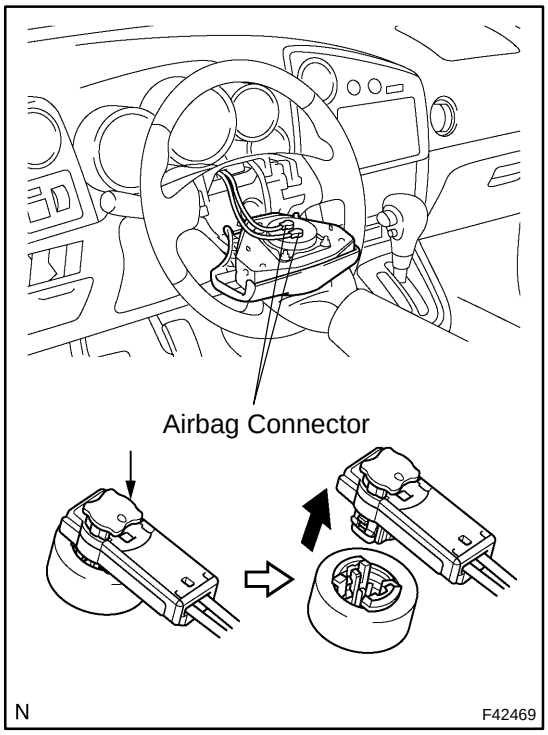

(b) Pull out the horn button assy from the steering wheel.

(c) Using a screwdriver, release the lock part of each airbag connector and disconnect the 2 airbag connectors.

NOTICE:

When removing the horn button assy, take care not to pull the airbag wire harness.

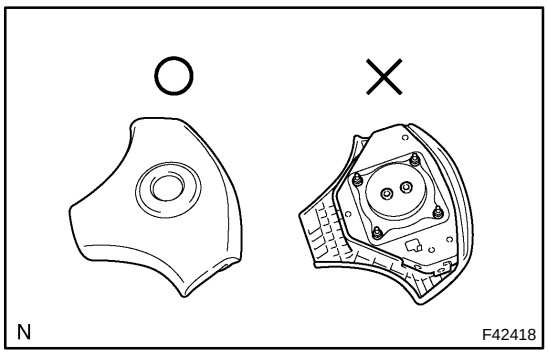

CAUTION:

- **When storing the horn button assy, keep the upper surface of the pad facing upward.**
- **Never disassemble the horn button assy.**

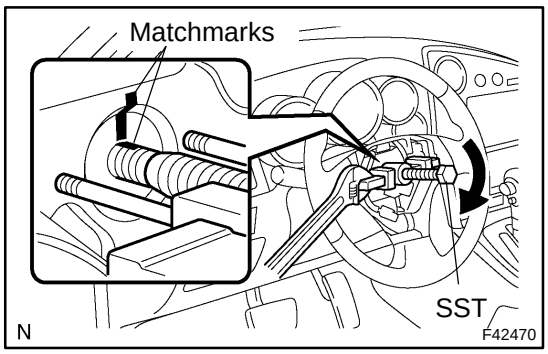

5. REMOVE STEERING WHEEL ASSY

(a) Disconnect the connector.

(b) Remove the steering wheel assy set nut.

(c) Place matchmarks on the steering wheel assy and main shaft assy.

(d) Using SST, remove the steering wheel assy.

SST 09950–50013 (09951–05010, 09952–05010, 09953–05020, 09954–05021)

6. REMOVE STEERING COLUMN COVER

(a) Remove the 3 screws and steering column cover.

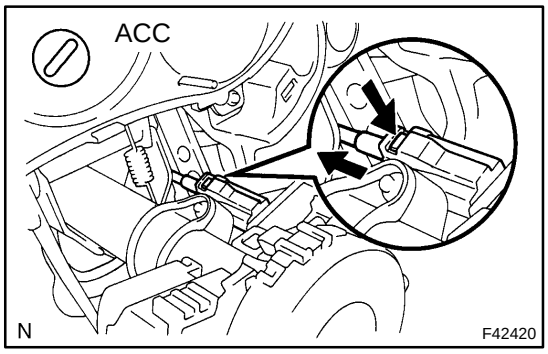

7. DISCONNECT FLOOR SHIFT PARKING LOCK CABLE ASSY (A/T TRANSAXLE)

(a) With the key in ACC, push the claw and pull out the floor shift parking lock cable.

8. REMOVE SPIRAL CABLE SUB–ASSY

9. REMOVE HEADLAMP DIMMER SWITCH ASSY

(a) Disconnect the connector and remove the headlamp dimmer switch assy.

10. REMOVE WINDSHIELD WIPER SWITCH ASSY

(a) Disconnect the connector and remove the windshield wiper switch assy.

11. REMOVE COLUMN HOLE COVER SILENCER SHEET

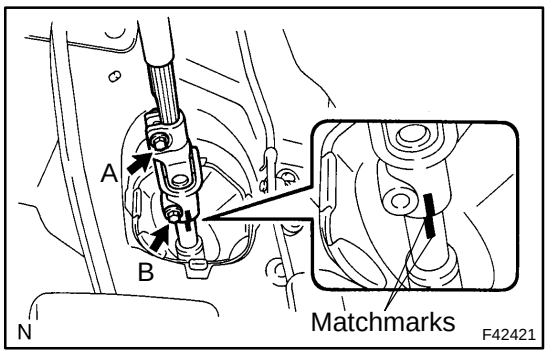

12. DISCONNECT STEERING INTERMEDIATE SHAFT

(a) Place matchmarks on the sliding yoke and steering intermediate shaft.

(b) Loosen the bolt A and remove the bolt B, then disconnect the steering intermediate shaft.

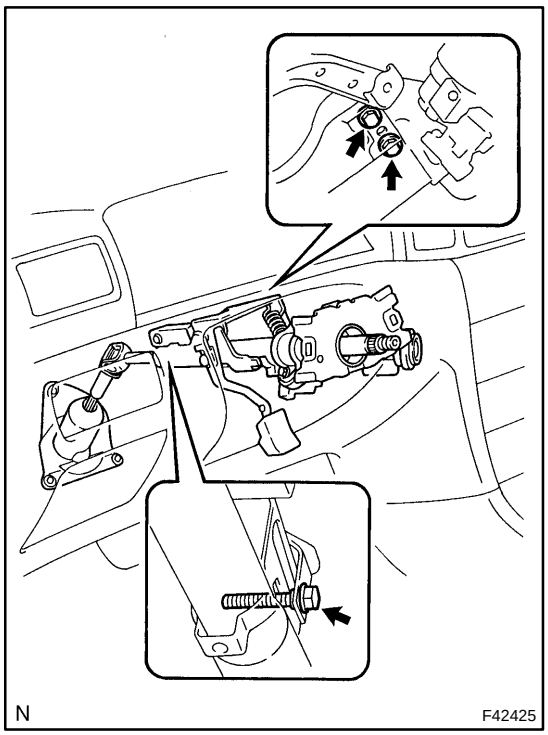

13. REMOVE STEERING COLUMN ASSY

(a) Disconnect the connectors and wire harness clamps from the steering column assy.

(b) Remove the 3 bolts and steering column assy.

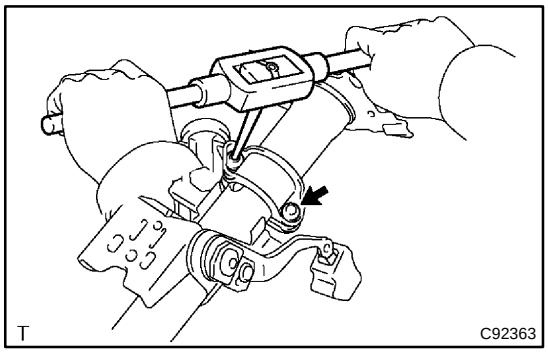

14. REMOVE STEERING COLUMN UPPER W/SWITCH BRACKET ASSY

(a) Using a centering punch, mark the center of the 2 tapered–head bolts.

(b) Using a 3 – 4 mm (0.12 – 0.16 in.) drill, drill into the 2 bolts.

(c) Using a screw extractor, remove the 2 bolts and steering column upper w/switch bracket assy.

15. REMOVE STEERING COLUMN CLAMP UPPER

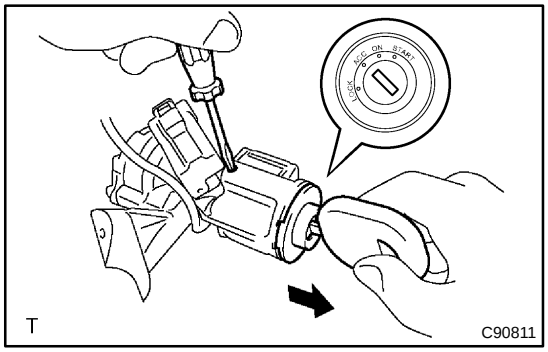

16. REMOVE IGNITION SWITCH LOCK CYLINDER ASSY

(a) Place the ignition switch lock cylinder assy at the ACC position.

(b) Push down the stop pin with a screwdriver, and pull out the cylinder assy.

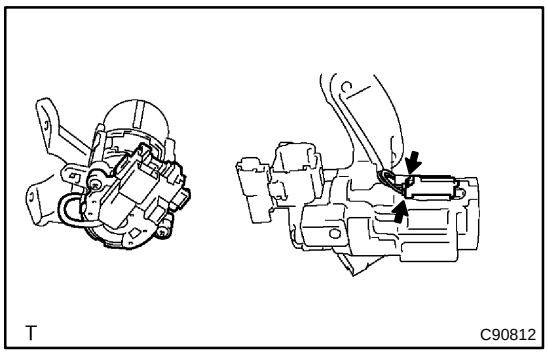

17. REMOVE UN–LOCK WARNING SWITCH ASSY

(a) Disconnect the un–lock warning switch assy connector from the ignition or starter switch assy.

(b) Remove the un–lock warning switch assy.

18. REMOVE IGNITION OR STARTER SWITCH ASSY

(a) Remove the 2 screws and ignition or starter switch assy from the steering column bracket assy.

19. INSTALL IGNITION OR STARTER SWITCH ASSY

(a) Install the ignition or starter switch assy to the steering column bracket assy with the 2 screws.

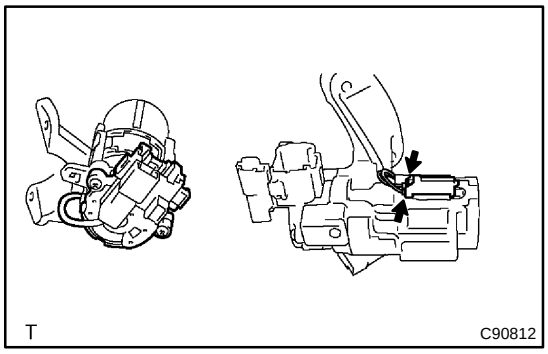

20. INSTALL UN–LOCK WARNING SWITCH ASSY

(a) Install the un–lock warning switch assy.

(b) Connect the un–lock warning switch assy connector to the ignition or starter switch assy.

21. INSTALL IGNITION SWITCH LOCK CYLINDER ASSY

(a) Make sure that the ignition switch lock cylinder assy is at the ACC position.

(b) Install the ignition switch lock cylinder assy.

22. INSPECT STEERING LOCK OPERATION

(a) Check that the steering lock mechanism is activated when removing the key.

(b) Check that the steering lock mechanism is deactivated when inserting the key and turning it to ACC position.

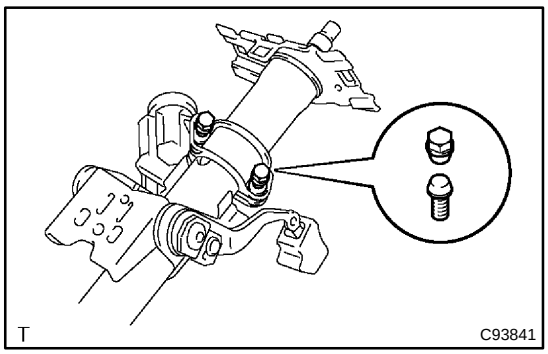

23. INSTALL STEERING COLUMN UPPER W/SWITCH BRACKET ASSY

(a) Temporarily install the steering column upper w/switch bracket assy and steering column upper clamp with 2 new tapered–head bolts.

(b) Tighten the 2 tapered–head bolts until the bolt heads break off.

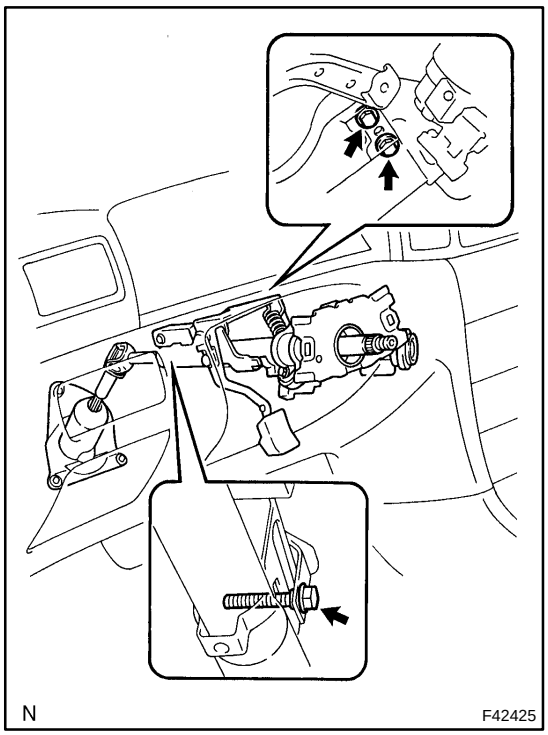

24. INSTALL STEERING COLUMN ASSY

(a) Install the steering column assy with the 3 bolts.
Torque: 21 N·m (210 kgf·cm, 15 ft·lbf)

(b) Connect the connectors and wire harness clamps.

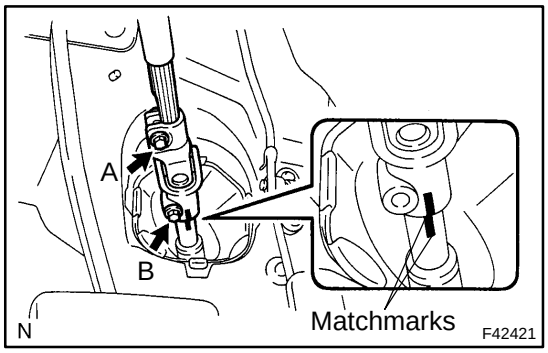

25. CONNECT STEERING INTERMEDIATE SHAFT

(a) Align the matchmarks on the sliding yoke and steering intermediate shaft.

(b) Install the bolt B and torque the bolt A.
Torque: 35 N·m (360 kgf·cm, 26 ft·lbf)

26. INSTALL COLUMN HOLE COVER SILENCER SHEET

27. INSTALL WINDSHIELD WIPER SWITCH ASSY

(a) Install the windshield wiper switch assy and connect the connector.

28. INSTALL HEADLAMP DIMMER SWITCH ASSY

(a) Install the headlamp dimmer switch assy and connect the connector.

29. PLACE FRONT WHEELS FACING STRAIGHT AHEAD

30. INSTALL SPIRAL CABLE SUB–ASSY

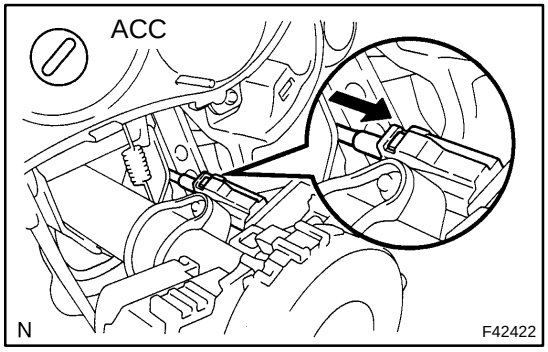

31. CONNECT FLOOR SHIFT PARKING LOCK CABLE ASSY (A/T TRANSAXLE)

(a) With the key in ACC, push into the floor shift parking lock cable and install it.

32. CONNECT CHECK KEY INTERLOCK OPERATION

33. INSTALL STEERING COLUMN COVER

(a) Install the steering column cover with the 3 screws.

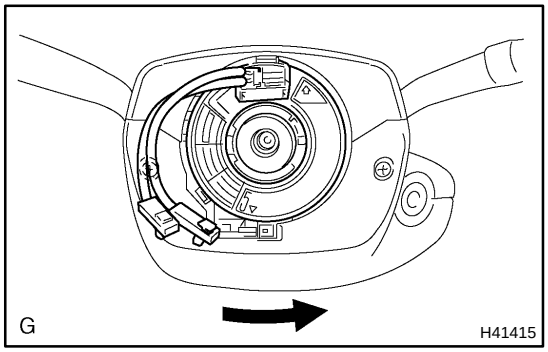

34. CENTER SPIRAL CABLE

(a) Check that the ignition switch is at OFF.

(b) Check that the battery negative terminal is disconnected.

NOTICE:

Do not start the operation for 90 seconds after removing the terminal.

(c) Turn the cable counterclockwise by hand until it becomes harder to turn.

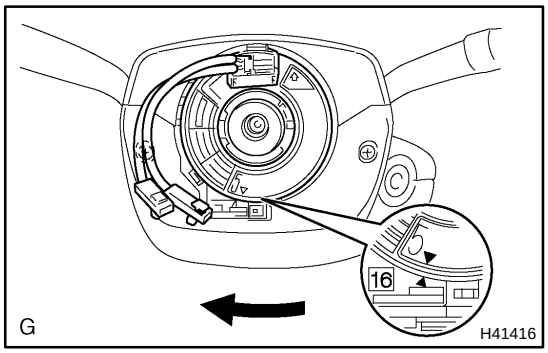

(d) Then rotate the cable clockwise about 2.5 turns to align the marks.

HINT:

The cable will rotate about 2.5 turns to either right or left of the center.

35. INSTALL STEERING WHEEL ASSY

(a) Align the matchmark with the one on the steering wheel assy and steering main shaft assy.

(b) Install the steering wheel assy with the set nut.

Torque: 50 N·m (510 kgf·cm, 37 ft·lbf)

(c) Connect the connector.

36. INSPECT HORN BUTTON ASSY (See page 60–8)

37. INSTALL HORN BUTTON ASSY

NOTICE:

- **Never use the airbag parts removed from another vehicle. When replacing parts, replace with new ones.**
- **Make sure that the horn button assy is installed to the specified torque.**
- **If the horn button assy has been dropped, or there are cracks, dents or other defects in the case or connector, replace the horn button assy with a new one.**
- **When installing the horn button assy, take care so that the wirings do not interfere with other parts and that they are not pinched between other parts.**

(a) Connect the 2 airbag connectors.
(b) Install the horn button assy after confirming that the circumference groove of the torx screws is caught on the screw case.

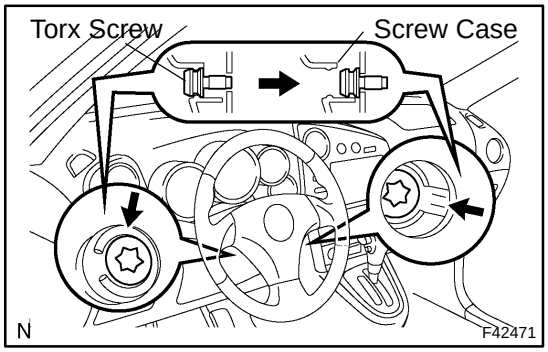

(c) Using a torx socket wrench, torque the 2 torx screws.
Torque: 8.8 N·m (90 kgf·cm, 78 in.·lbf)

38. STEERING WHEEL CENTER POINT

39. INSPECT SRS WARNING LIGHT (See page 05–543)

5105M–03

ON–VEHICLE INSPECTION

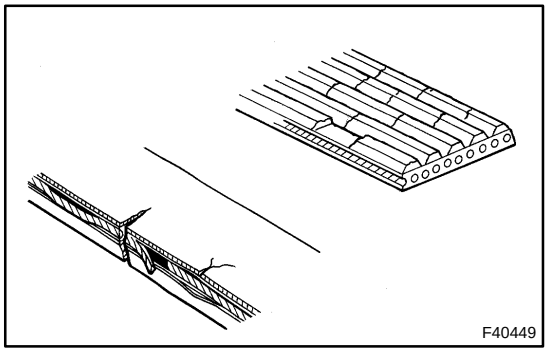

1. INSPECT DRIVE BELT

(a) Visually check the belt for excessive wear, frayed cords, etc.

If any defect is found, replace the drive belt.

HINT:

Cracks on the rib side of a belt are considered acceptable. If the missing chunks from the ribs are found on the belt, it should be replaced.

2. BLEED POWER STEERING SYSTEM

(a) Check the fluid level.

(b) Jack up the front of the vehicle and support it with the stands.

(c) Turn the steering wheel.

(1) With the engine stopped, turn the wheel slowly from lock to lock several times.

(d) Lower the vehicle.

(e) Start the engine.

(1) Run the engine at idle for a few minutes.

(f) Turn the steering wheel.

(1) With the engine idling, turn the wheel to left or right full lock position and keep it there for 2 – 3 seconds, then turn the wheel to the opposite full lock position and keep it there for 2 – 3 seconds.

(2) Repeat (1) several times.

(g) Stop the engine.

(h) Check for foaming or emulsification.

Especially, if the system has to be bled twice because of foaming or emulsification, check for fluid leaks in the system.

(i) Check the fluid level.

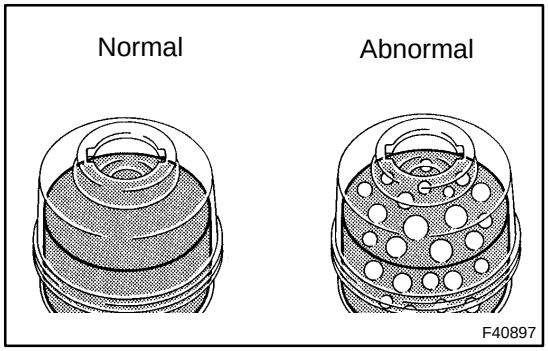

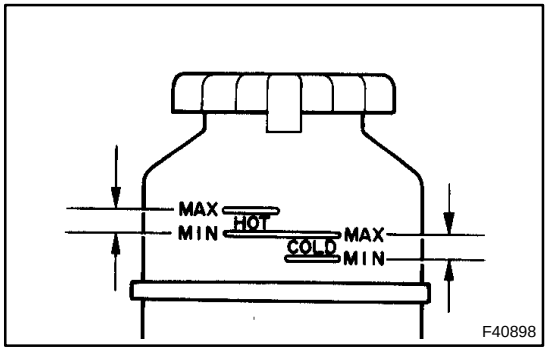

3. CHECK FLUID LEVEL

(a) Keep the vehicle level.

(b) With the engine stopped, check the fluid level in the oil reservoir.

If necessary, add fluid.

Fluid: ATF DEXRON® II or III

HINT:

Check that the fluid level is within the HOT LEVEL range on the reservoir cap. If the fluid is cold, check that it is within the COLD LEVEL range.

(c) Start the engine and run it at idle.
(d) Turn the steering wheel from lock to lock several times to raise fluid temperature.
Fluid temperature: 75 – 80˚C (167 – 176˚F)

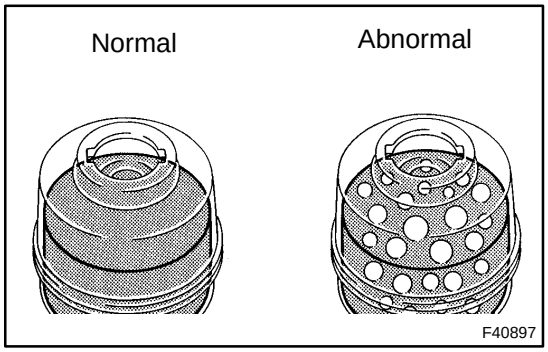

(e) Check for foaming or emulsification.
If foaming or emulsification is identified, bleed the power steering system.

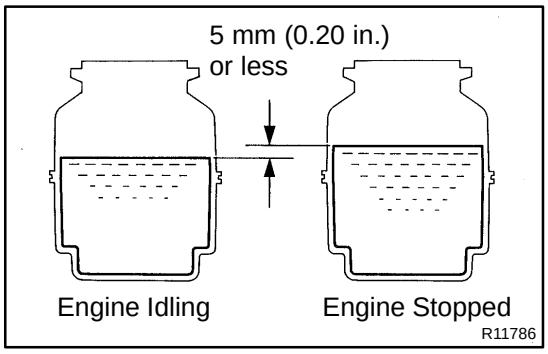

(f) With the engine idling, measure the fluid level in the oil reservoir.
(g) Stop the engine.
(h) Wait a few minutes and measure the fluid level in the oil reservoir again.
Maximum fluid level rise: 5 mm (0.20 in.)
If a problem is found, bleed the power steering system.
(i) Check the fluid level.

4. CHECK STEERING FLUID PRESSURE

(a) Disconnect the pressure feed tube from the PS gear (See page 51–22).
(b) Connect SST, as shown in the illustration.
SST 09640–10010 (09641–01010, 09641–01020, 09641–01030)

NOTICE:
Check that the valve of the SST is in the open position.

(c) Bleed the power steering system.
(d) Start the engine and run it at idle.
(e) Turn the steering wheel from lock to lock several times to raise fluid temperature.
Fluid temperature: 75 – 80 ˚C (167 – 176 ˚F)

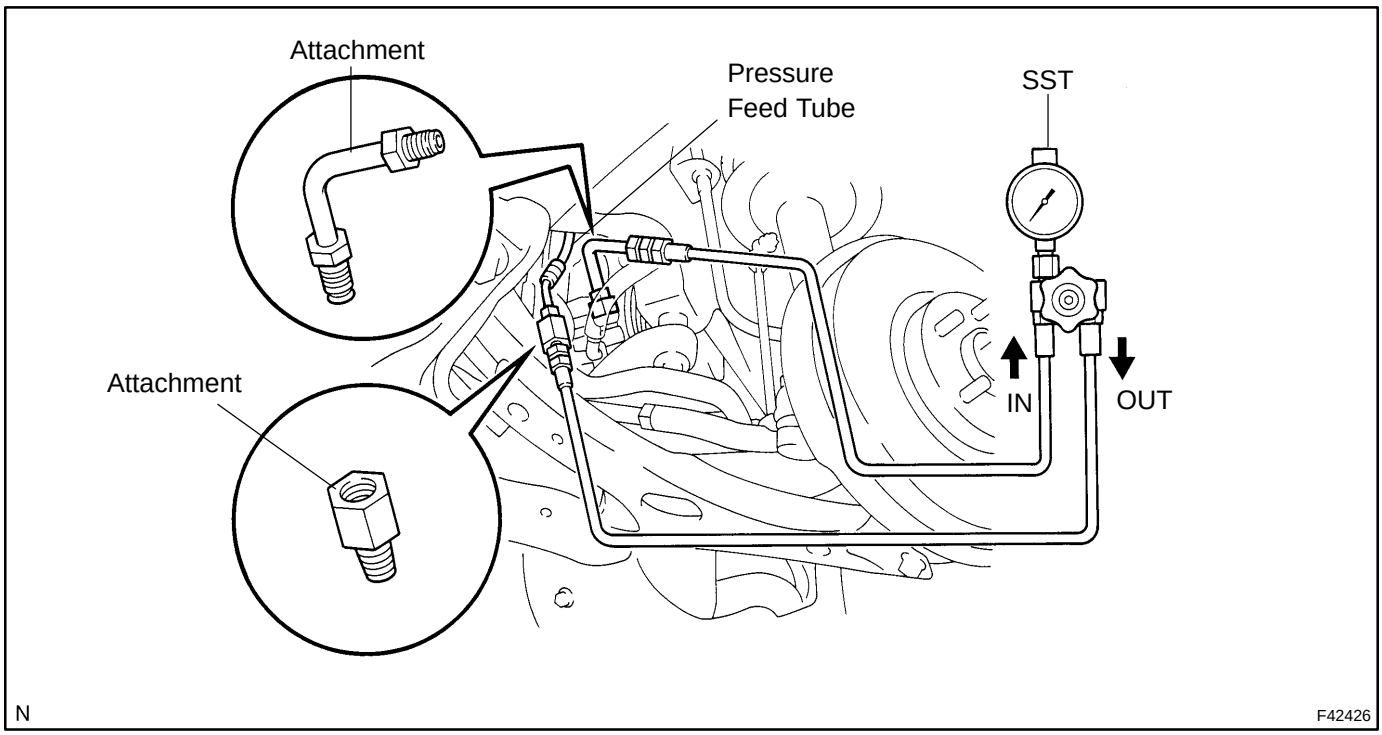

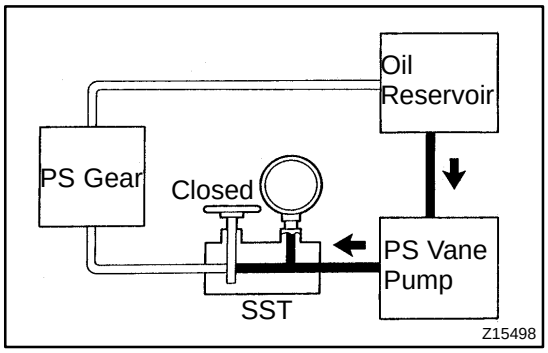

(f) With the engine idling, close the valve of the SST and observe the reading on the SST.

Fluid pressure:

7,300 – 7,800 kPa (75 – 80 kgf/cm^2, 1,067 – 1,138 psi)

NOTICE:

- **Do not keep the valve closed for more than 10 seconds.**
- **Do not let the fluid temperature become too high.**

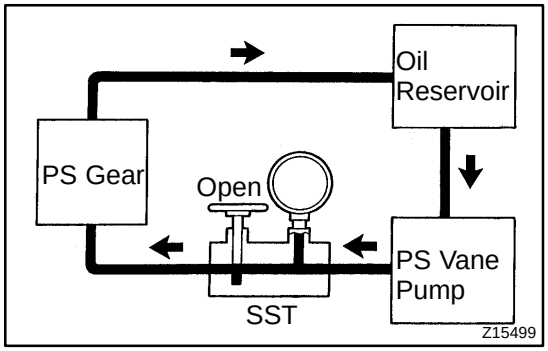

(g) With the engine idling, open the valve fully.

(h) Measure the fluid pressure at engine speeds of 1,000 rpm and 3,000 rpm.

Fluid pressure difference:

490 kPa (5 kgf/cm^2, 71 psi) or less

NOTICE:

Do not turn the steering wheel.

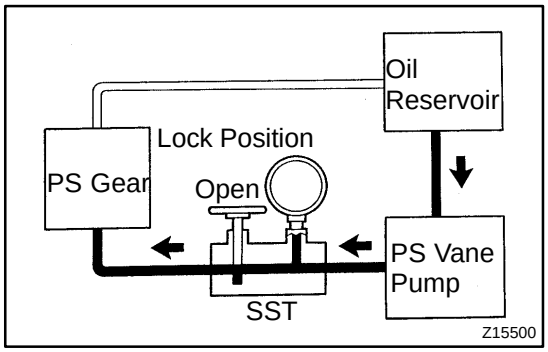

(i) With the engine idling and valve fully opened, turn the steering wheel to full lock position.

Fluid pressure:

7,300 – 7,800 kPa (75 – 80 kgf/cm^2, 1,067 – 1,138 psi)

NOTICE:

- **Do not maintain lock position for more than 10 seconds.**
- **Do not let the fluid temperature become too high.**

(j) Disconnect the SST.
SST 09640–10010 (09641–01010, 09641–01020, 09641–01030)
(k) Connect the pressure feed tube to the PS gear (See page 51–22).
(l) Bleed the power steering system.

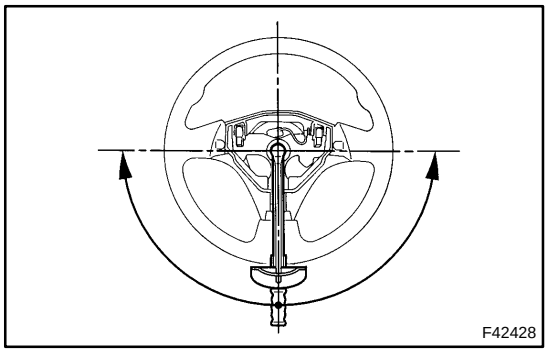

5. CHECK STEERING EFFORT

(a) Center the steering wheel assy.
(b) Remove the horn button assy (See page 50–8).
(c) Start the engine and run it at idle.
(d) Measure the steering effort in both directions.
Steering effort (Reference):
6 N·m (60 kgf·cm, 53 in.·lbf) or less

HINT:
Take the tire type, pressure and contact surface into consideration before making your diagnosis.

(e) Install the steering wheel assy set nut.
Torque: 50 N·m (510 kgf·cm, 37 ft·lbf)
(f) Install the horn button assy (See page 50–8).

POWER STEERING SYSTEM

51080–01

PRECAUTION

1. HANDLING PRECAUTIONS ON SRS AIRBAG SYSTEM

(a) The vehicle is equipped with SRS (Supplemental Restraint System) such as the driver airbag and front passenger airbag. Failure to carry out service operation in correct sequence could cause the SRS to unexpectedly deploy during servicing, possibly leading to a serious accident. Before servicing (including removal or installation of parts, inspection or replacement), be sure to read the precautionary notice for the supplemental restraint system (See page 60–1).

5105L–03

PROBLEM SYMPTOMS TABLE

HINT:

Use the table below to help you find the cause of the problem. The numbers indicate the probability of the cause of the problem. Check each part in the order shown. If necessary, repair or replace these parts.

Symptom	Suspect Area	See page
Hard steering	1. Tires (Improperly inflated)	28–1
	2. Power steering fluid level (Low)	51–3
	3. Drive belt (Loose)	14–177 14–4
	4. Front wheel alignment (Incorrect)	26–6
	5. Steering system joints (Worn)	–
	6. Suspension arm ball joints (Worn)	26–20
	7. Steering column (Binding)	–
	8. Power steering vane pump	51–8
	9. Power steering gear	51–22
Poor return	1. Tires (Improperly inflated)	28–1
	2. Front wheel alignment (Incorrect)	26–6
	3. Steering column (Binding)	–
	4. Power steering gear	51–22
Excessive play	1. Steering system joints (Worn)	–
	2. Suspension arm ball joints (Worn)	26–20
	3. Intermediate shaft, Sliding yoke (Worn)	–
	4. Front wheel bearing (Worn)	30–56
	5. Power steering gear	51–22
Abnormal noise	1. Power steering fluid level (Low)	51–3
	2. Steering system joints (Worn)	–
	3. Power steering vane pump	51–8
	4. Power steering gear	51–22

VANE PUMP ASSY

COMPONENTS

51081–01

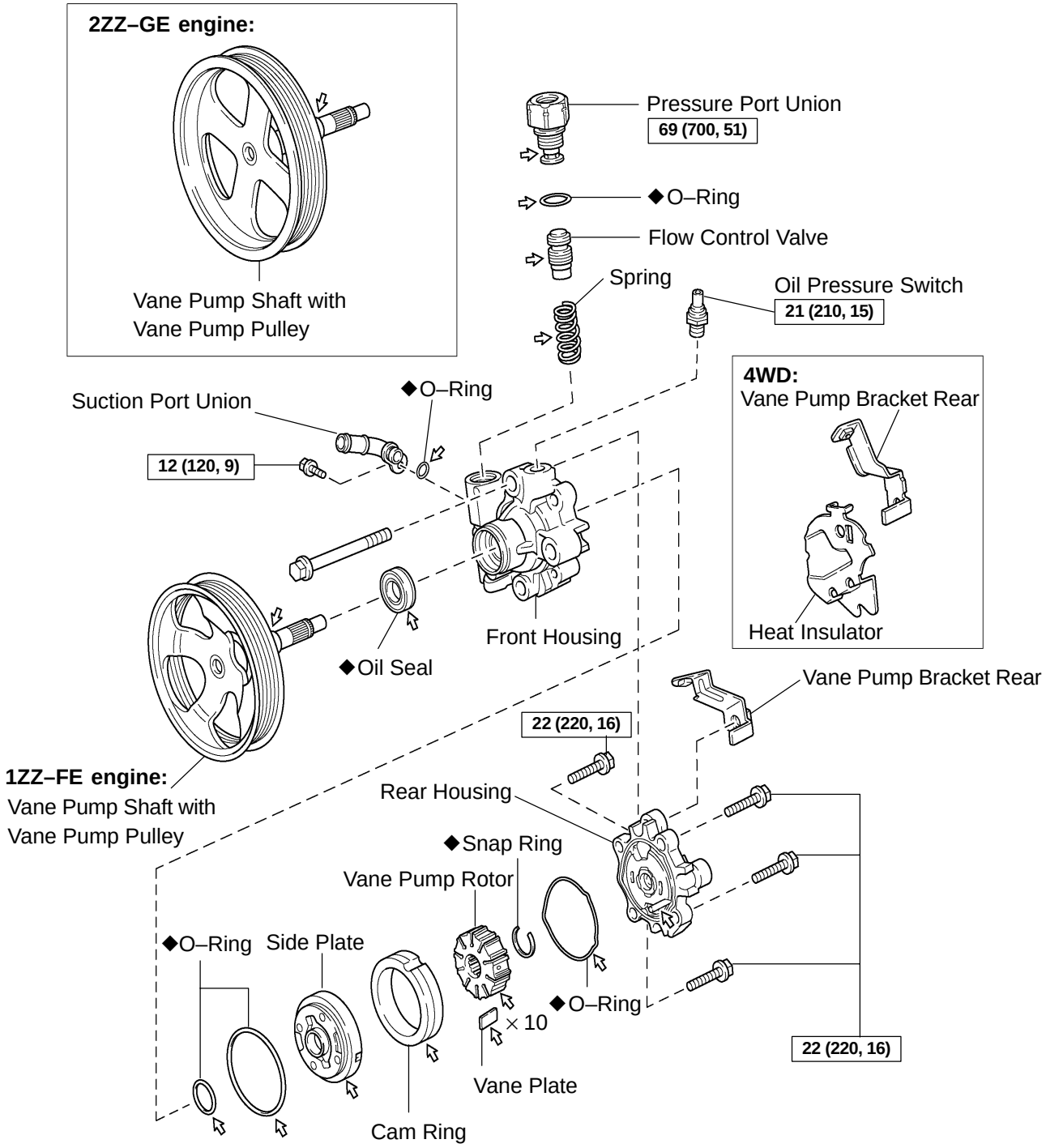

N·m (kgf·cm, ft·lbf) : Specified torque
◆Non–reusable part
⇦ Power steering fluid

N

F42429

51082–01

OVERHAUL

NOTICE:

- **When using a vise, do not over tighten.**
- **When installing, coat the parts indicated by the arrows with power steering fluid (See page 51–7).**

1. REMOVE FRONT WHEEL RH

2. DRAIN POWER STEERING FLUID

3. REMOVE ENGINE UNDER COVER RH

4. REMOVE FAN AND GENERATOR V BELT

5. DISCONNECT OIL RESERVOIR TO PUMP HOSE NO.1

(a) Remove the clip and disconnect the oil reservoir to pump hose No.1.

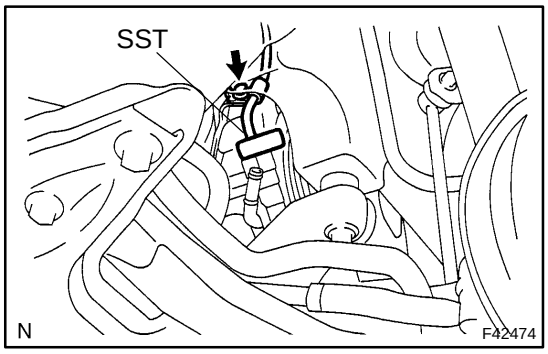

6. DISCONNECT PRESSURE FEED TUBE ASSY

(a) Using SST, disconnect the pressure feed tube assy.
SST 09023–38400

(b) Remove the bolt and disconnect the pressure feed tube clamp.

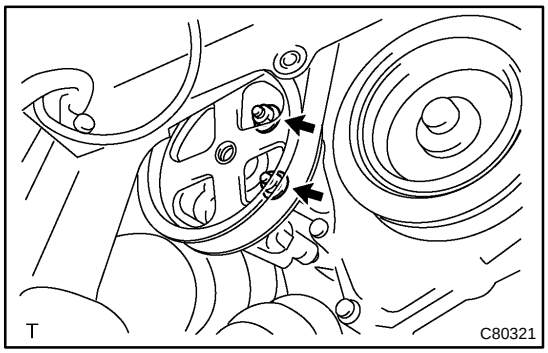

7. REMOVE VANE PUMP ASSY

(a) Disconnect the oil pressure switch connector.

(b) Remove the 2 bolts, nuts and vane pump assy.

8. REMOVE VANE PUMP BRACKET REAR

(a) Remove the bolt and vane pump bracket rear.

9. REMOVE POWER STEERING PUMP HEAT INSULATOR (4WD DRIVE TYPE)

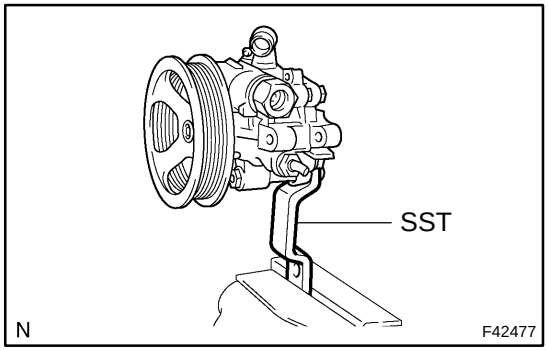

10. FIX VANE PUMP ASSY

(a) Using SST, hold the vane pump assy in a vise.
SST 09630–00014 (09631–00132)

11. REMOVE POWER STEERING SUCTION PORT UNION

(a) Remove the bolt and power steering suction port union.

(b) Remove the O–ring from the power steering suction port union.

12. REMOVE FLOW CONTROL VALVE

(a) Remove the pressure port union.

(b) Remove the O–ring from the pressure port union.

(c) Remove the flow control valve and flow control valve compression spring.

13. REMOVE POWER STEERING OIL PRESSURE SWITCH

NOTICE:

Be careful so that oil pressure switch is not dropped or strongly damaged, however if it is damaged replace it with a new one.

14. REMOVE VANE PUMP HOUSING REAR

(a) Remove the 4 bolts and vane pump housing rear from the vane pump housing front.

(b) Remove the O–ring from the vane pump housing front.

15. REMOVE W/PULLEY SHAFT SUB–ASSY

(a) Using a screwdriver, remove the snap ring from the w/ pulley shaft sub–assy.

(b) Remove the w/ pulley shaft sub–assy.

16. REMOVE VANE PUMP ROTOR

(a) Remove the 10 vane plates.

(b) Remove the vane pump rotor.

17. REMOVE VANE PUMP CAM RING

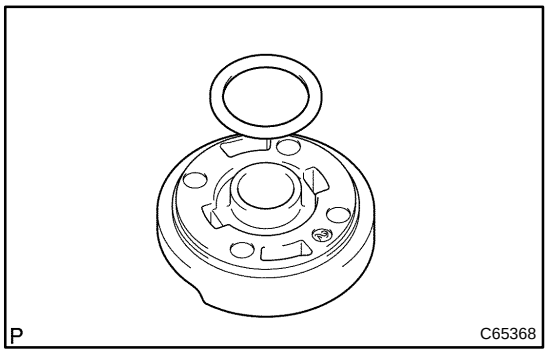

18. REMOVE VANE PUMP SIDE PLATE FRONT

(a) Remove the side plate from the pump housing front.

(b) Remove the O–ring from the side plate front.

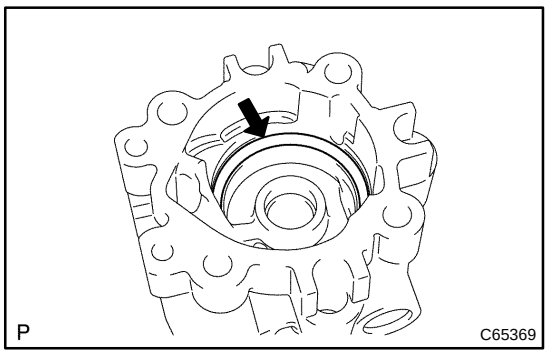

(c) Remove the O–ring from the pump housing front.

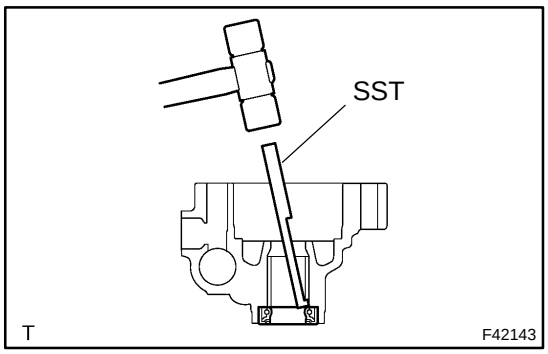

19. REMOVE VANE PUMP HOUSING OIL SEAL

(a) Using SST and a hammer, remove the vane pump housing oil seal.
SST 09631–10030

NOTICE:
Be careful not to damage the pump housing.

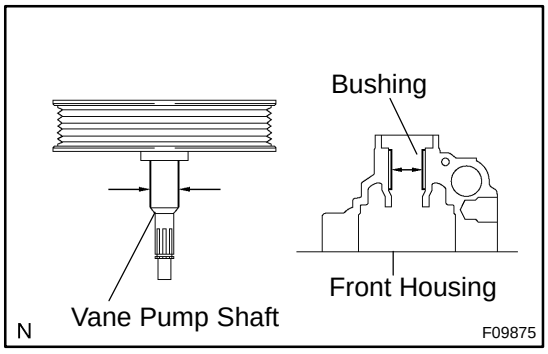

20. INSPECT OIL CLEARANCE

(a) Using a micrometer and a caliper gauge, measure the oil seal clearance.
Standard clearance:
0.021 – 0.043 mm (0.0008 – 0.0017 in.)
Maximum clearance: 0.07 mm (0.0028 in.)

If it is more than the maximum, replace the vane pump assy.

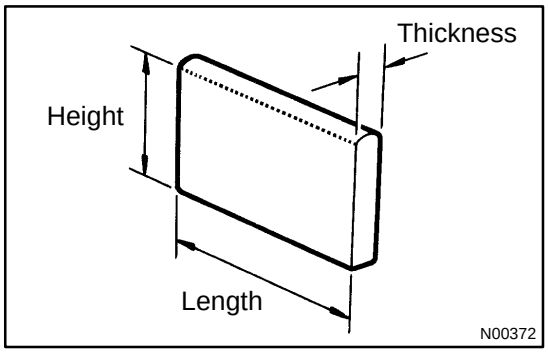

21. INSPECT VANE PUMP ROTOR AND VANE PLATES

(a) Using a micrometer, measure the height, thickness and length of the vane plates.
Minimum height: 7.6 mm (0.299 in.)
Minimum thickness: 1.405 mm (0.0553 in.)
Minimum length: 11.993 mm (0.4722 in.)

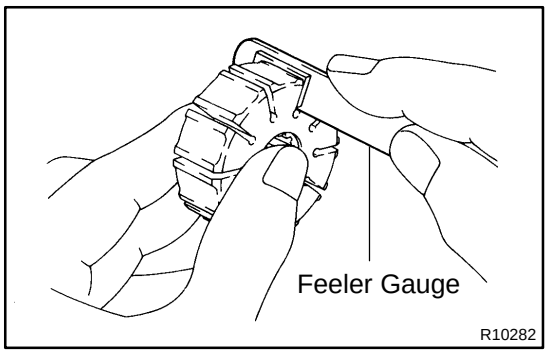

(b) Using a feeler gauge, measure the clearance between a side face of the vane pump rotor groove and vane plate.
Maximum clearance: 0.03 mm (0.0012 in.)

If it is more than the maximum, replace the vane pump assy.

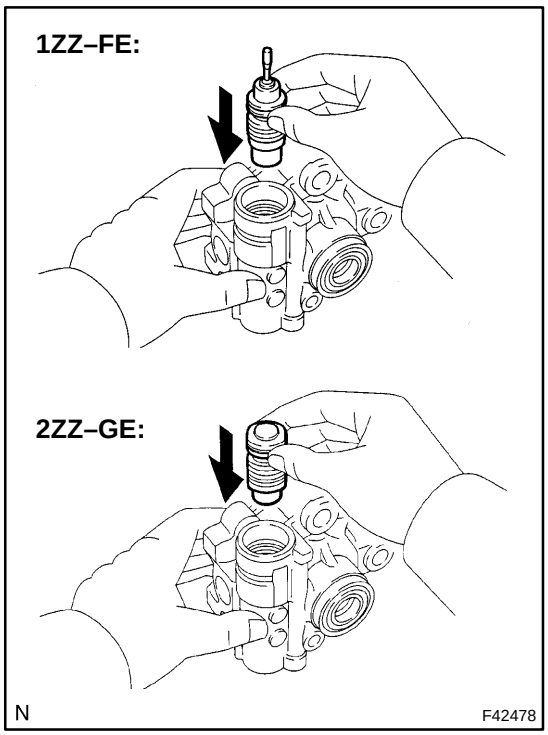

22. INSPECT FLOW CONTROL VALVE

(a) Coat the flow control valve with power steering fluid and check that it falls smoothly into the flow control valve hole by its own weight.

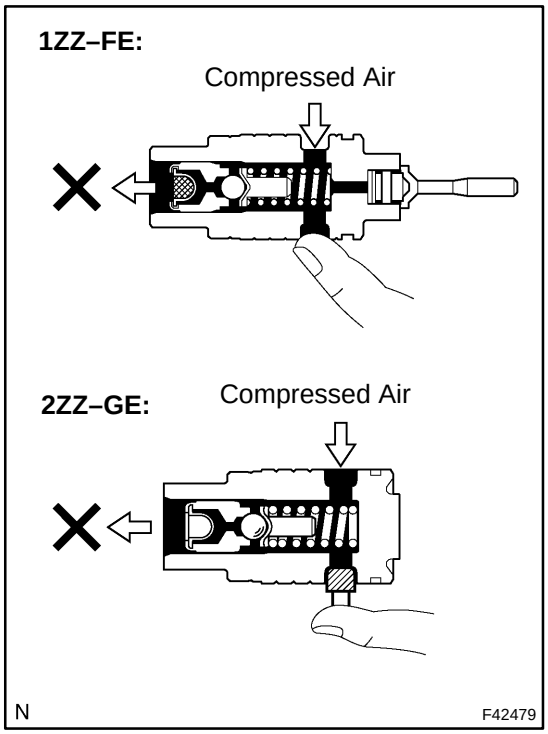

(b) Check the flow control valve for leakage. Close one of the holes and apply compressed air of 392 – 490 kPa (4 – 5 kgf·cm^2, 57 – 71 psi) into the opposite side hole, and confirm that air does not come out from the end holes.

If necessary, replace the vane pump assy.

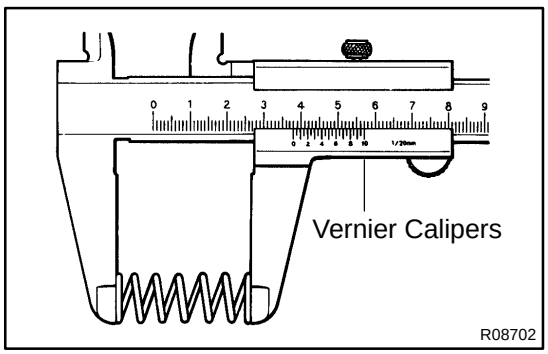

23. INSPECT FLOW CONTROL VALVE COMPRESSION SPRING

(a) Using vernier calipers, measure the free length of the spring.

Minimum free length: 36.9 mm (1.453 in.)

If it is not within the specification, replace the vane pump assy.

24. INSPECT PRESSURE PORT UNION

(a) If the union seat in the pressure port union is remarkably damaged and it may cause fluid leakage, replace the vane pump assy.

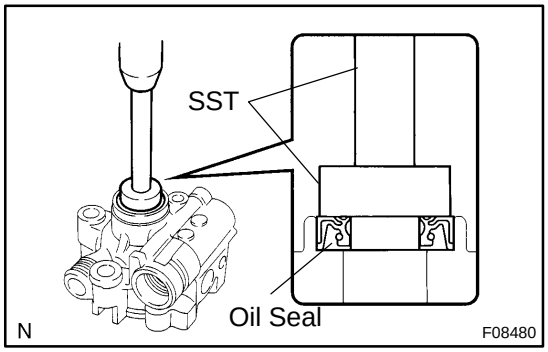

25. INSTALL VANE PUMP HOUSING OIL SEAL

(a) Coat a new vane pump housing oil seal lip with power steering fluid.

(b) Using SST and a press, install a new vane pump housing oil seal.

SST 09950–60010 (09951–00280), 09950–70010 (09951–07100)

NOTICE:

Make sure that the vane pump housing oil seal is installed facing in the correct direction.

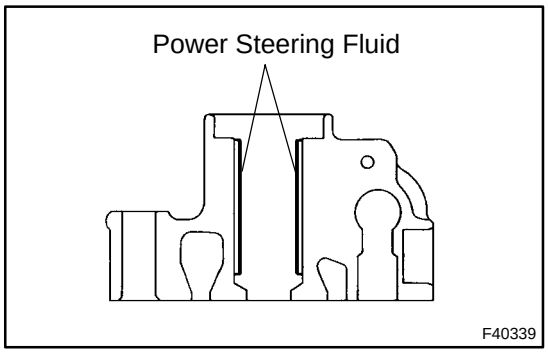

26. INSTALL W/PULLEY SHAFT SUB–ASSY

(a) Coat inside bushing surface of the vane pump housing front with power steering fluid.

(b) Gradually insert the vane pump shaft.

NOTICE:

Do not damage the vane pump housing oil seal lip in the vane pump housing front.

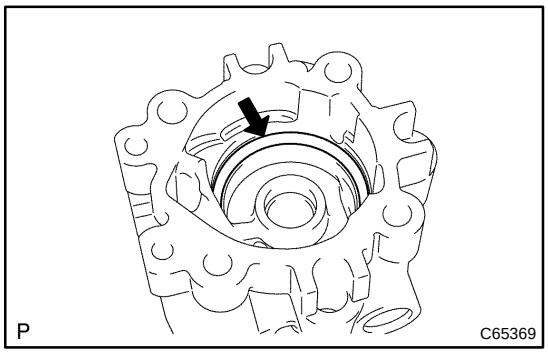

27. INSTALL VANE PUMP SIDE PLATE FRONT

(a) Coat a new O–ring with power steering fluid and install it to the vane pump housing front.

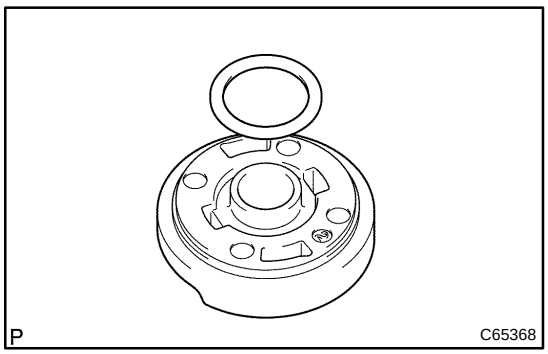

(b) Coat a new O–ring with power steering fluid and install it to the side plate front.

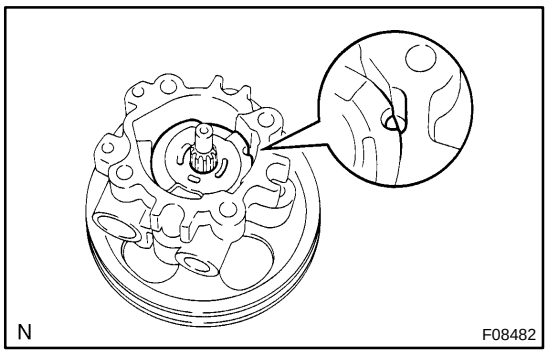

(c) Align the dent of the vane pump side plate front with that of the vane pump housing front, and install the vane pump side plate front.

NOTICE:

Make sure that the side plate front is installed facing in the correct direction.

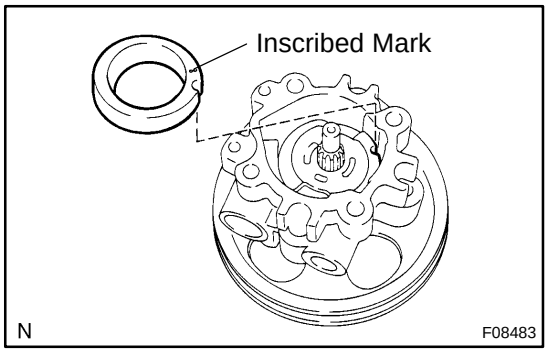

28. INSTALL VANE PUMP CAM RING

(a) Align the dent of the cam ring with that of the side plate front, and install the cam ring with the inscribed mark facing outward.

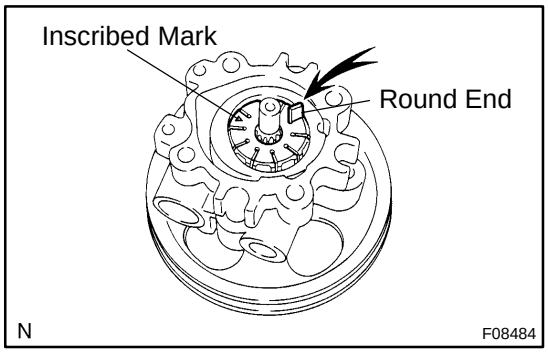

29. INSTALL VANE PUMP ROTOR

(a) Install the vane pump rotor with the inscribed mark facing outward.

(b) Coat 10 vane plates with power steering fluid.

(c) Install the vane plates with the round end facing outward.

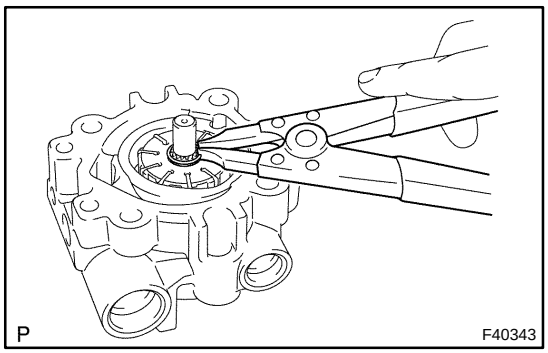

(d) Using a snap ring expander, install a new snap ring to the w/ pulley shaft sub–assy.

30. INSTALL VANE PUMP HOUSING REAR

(a) Coat a new O–ring with power steering fluid and install it to the pump housing rear.

(b) Align the straight pin of the vane pump housing rear with the dents of the vane pump cam ring, vane pump side plate front and vane pump housing front, and install the vane pump housing rear with the 4 bolts.

Torque: 22 N·m (220 kgf·cm, 16 ft·lbf)

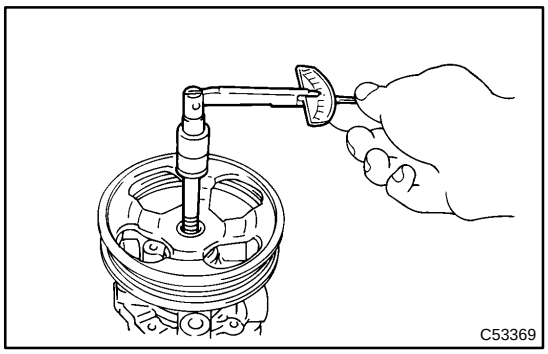

31. INSPECT PRELOAD

(a) Check that the pump rotates smoothly without abnormal noise.

(b) Temporarily install the service bolt.
Recommended service bolt:
Thread diameter: 10 mm (0.3937 in.)
Thread pitch: 1.25 mm (0.0492 in.)
Bolt length: 50 mm (1.9685 in.)

(c) Using a torque wrench, check the pump rotating torque.
Rotating torque:
0.27 N·m (2.8 kgf·cm, 2.4 ft·lbf) or less

32. INSTALL POWER STEERING OIL PRESSURE SWITCH

(a) Coat a new O–ring with power steering fluid and install it to the power steering oil pressure switch.

(b) Install the power steering oil pressure switch to the vane pump assy.
Torque: 21 N·m (210 kgf·cm, 15 ft·lbf)

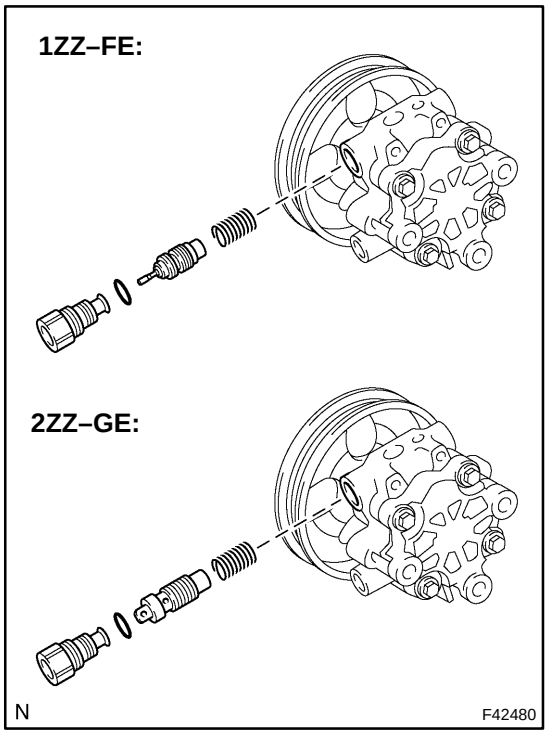

33. INSTALL FLOW CONTROL VALVE

(a) Coat the flow control valve compression spring and flow control valve with power steering fluid.

(b) Install the flow control valve compression spring and flow control valve.

(c) Coat a new O–ring with power steering fluid and install it to the pressure port union.

(d) Install the pressure port union.
Torque: 69 N·m (700 kgf·cm, 51 ft·lbf)

34. INSTALL POWER STEERING SUCTION PORT UNION

(a) Coat a new O–ring with power steering fluid, and install it to the power steering suction port union.

(b) Install the power steering suction port union with the bolt.
Torque: 12 N·m (120 kgf·cm, 9 ft·lbf)

35. INSTALL POWER STEERING PUMP HEAT INSULATOR (4WD DRIVE TYPE)

36. INSTALL VANE PUMP BRACKET REAR

(a) Install the vane pump bracket rear with the bolt.
Torque: 37 N·m (380 kgf·cm, 27 ft·lbf)

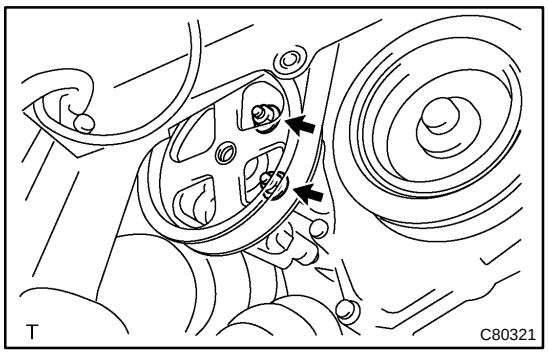

37. INSTALL VANE PUMP ASSY

(a) Install the vane pump assy with the 2 bolts and nuts.
Torque: 37 N·m (380 kgf·cm, 27 ft·lbf)

(b) Connect the oil pressure switch connector.

NOTICE:

Be careful that the oil does not adhere to the connector.

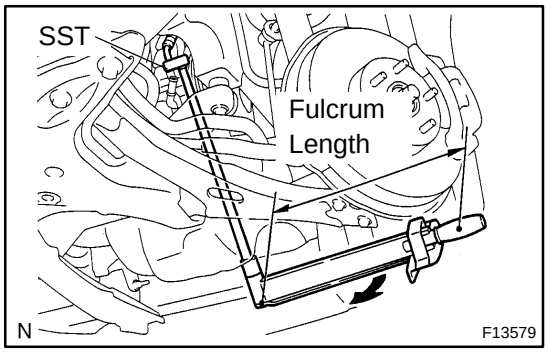

38. CONNECT PRESSURE FEED TUBE ASSY

(a) Using SST, connect the pressure feed tube assy.
SST 09023–38400
Torque: 41 N·m (420 kgf·cm, 30 ft·lbf)

HINT:

- Use a torque wrench with a fulcrum length of 345 mm (13.58 in.).
- This torque value is effective when SST is parallel to a torque wrench.

(b) Connect the pressure feed tube clamp with the bolt.
Torque: 7.8 N·m (80 kgf·cm, 69 ft·lbf)

39. CONNECT OIL RESERVOIR TO PUMP HOSE NO.1

(a) Connect the oil reservoir to pump hose No.1 with the clip.

40. INSTALL FAN AND GENERATOR V BELT

41. INSTALL FRONT WHEEL RH
Torque: 103 N·m (1,050 kgf·cm, 76 ft·lbf)

42. ADD POWER STEERING FLUID

43. BLEED POWER STEERING FLUID(See page 51–3)

44. INSPECT FLUID LEAK

45. INSTALL ENGINE UNDER COVER RH

RACK & PINION POWER STEERING GEAR ASSY

51083–01

COMPONENTS

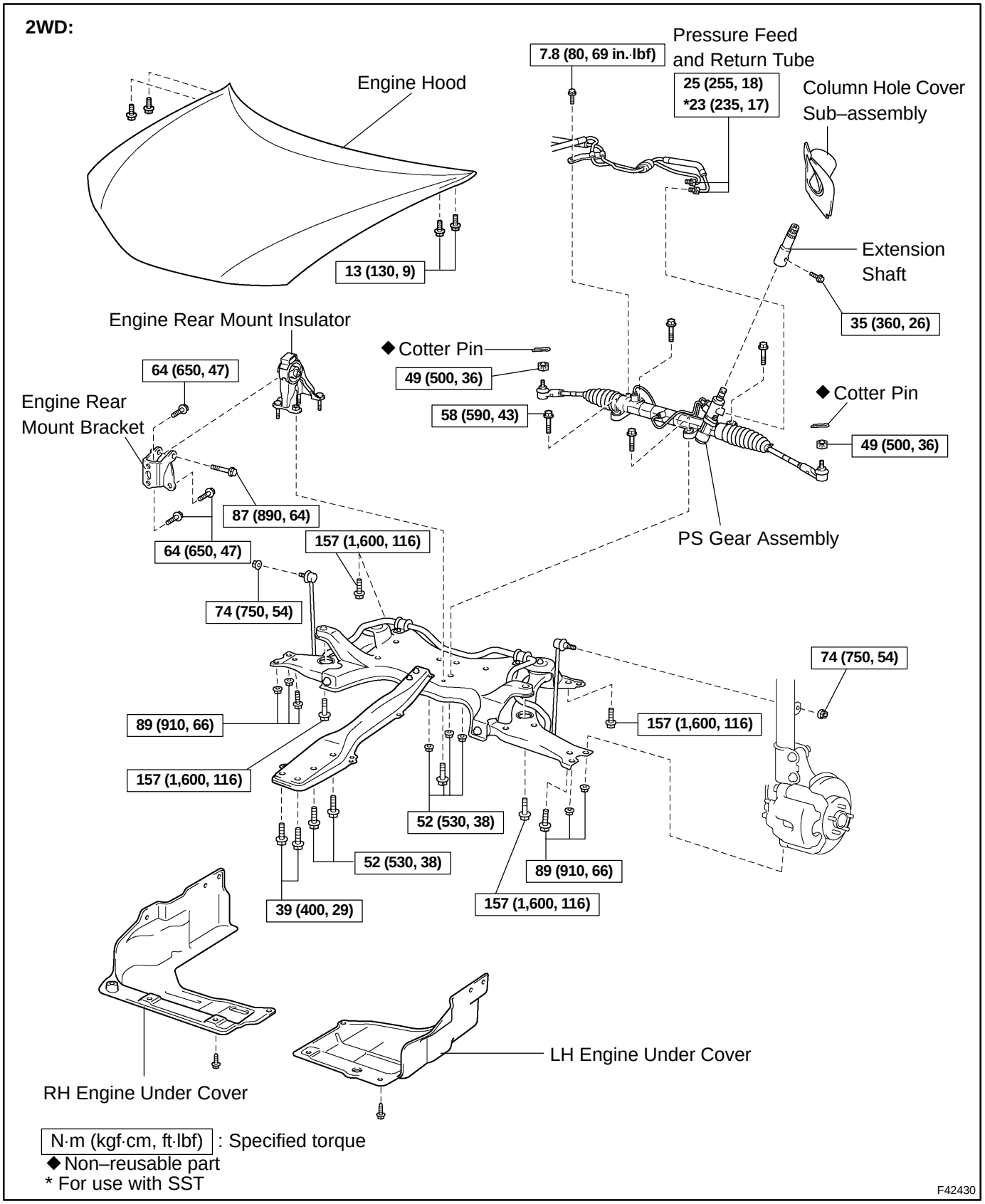

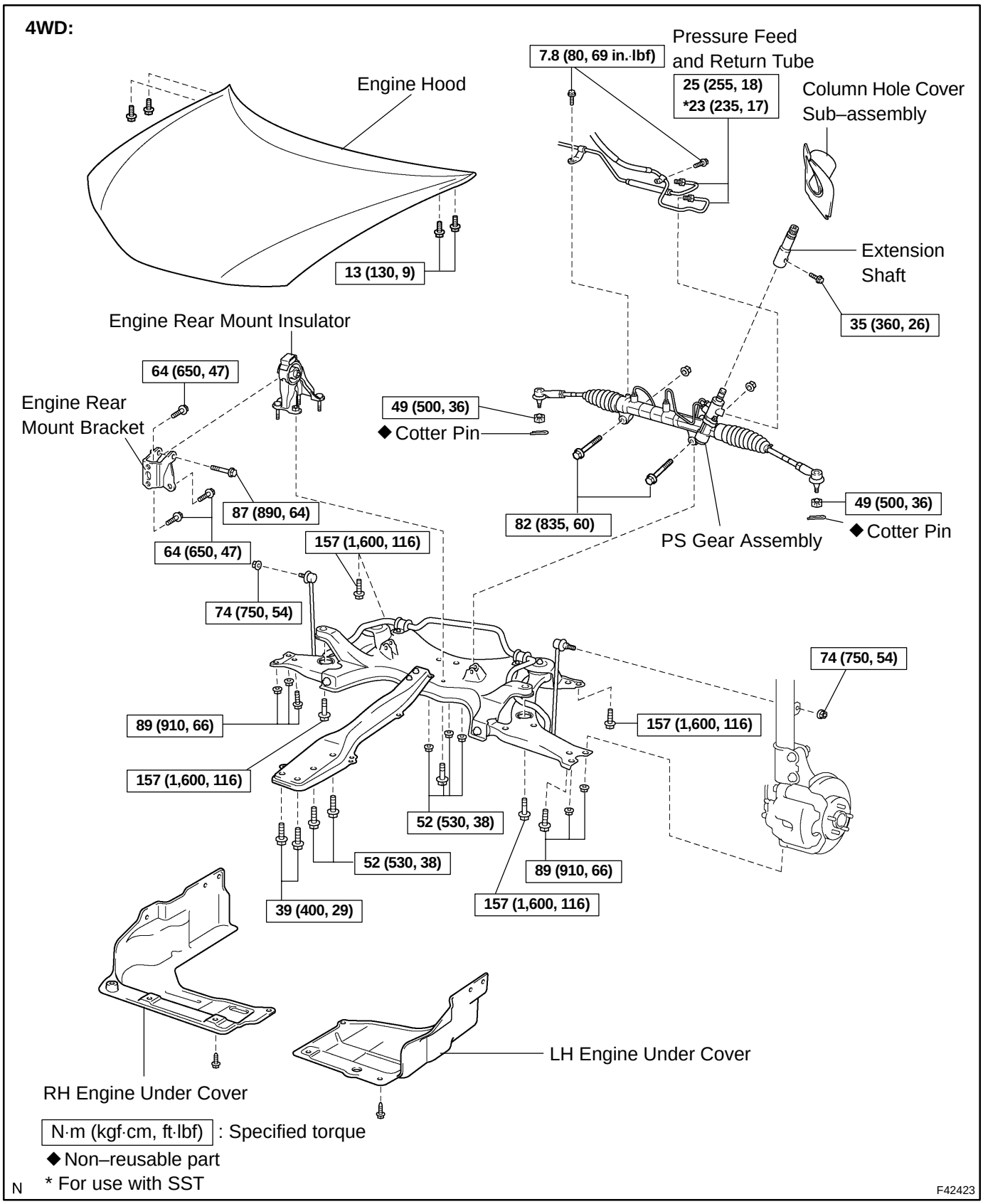
4WD:
Engine Hood
13 (130, 9)
7.8 (80, 69 in.·lbf)
Pressure Feed
and Return Tube
25 (255, 18)
*23 (235, 17)
Column Hole Cover
Sub–assembly
Extension
Shaft
35 (360, 26)
Engine Rear Mount Insulator
64 (650, 47)
Engine Rear
Mount Bracket
49 (500, 36)
◆Cotter Pin
87 (890, 64)
64 (650, 47)
82 (835, 60)
49 (500, 36)
◆Cotter Pin
PS Gear Assembly
157 (1,600, 116)
74 (750, 54)
74 (750, 54)
89 (910, 66)
157 (1,600, 116)
157 (1,600, 116)
52 (530, 38)
52 (530, 38)
89 (910, 66)
39 (400, 29)
157 (1,600, 116)
LH Engine Under Cover
RH Engine Under Cover
N·m (kgf·cm, ft·lbf) : Specified torque
◆Non–reusable part
* For use with SST
N
F42423

2WD:

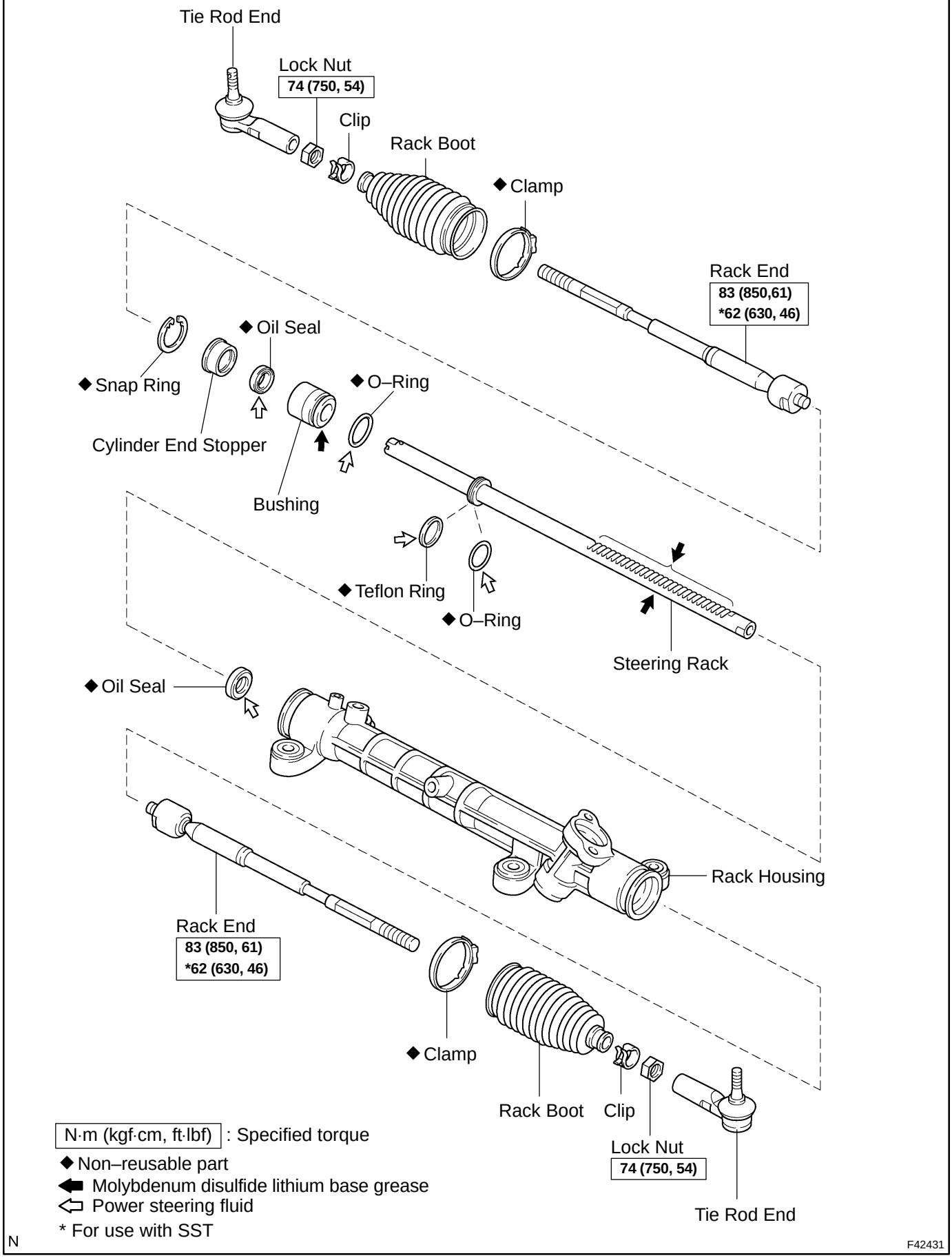
Tie Rod End
Lock Nut
74 (750, 54)
Clip
Rack Boot
◆Clamp
Rack End
83 (850,61)
*62 (630, 46)
◆Oil Seal
◆Snap Ring
◆O–Ring
Cylinder End Stopper
Bushing
◆Teflon Ring
◆O–Ring
Steering Rack
◆Oil Seal
Rack Housing
Rack End
83 (850, 61)
*62 (630, 46)
◆Clamp
Rack Boot
Clip
Lock Nut
74 (750, 54)
Tie Rod End
N·m (kgf·cm, ft·lbf) : Specified torque
◆Non–reusable part
Molybdenum disulfide lithium base grease
Power steering fluid
* For use with SST
N
F42431

4WD:

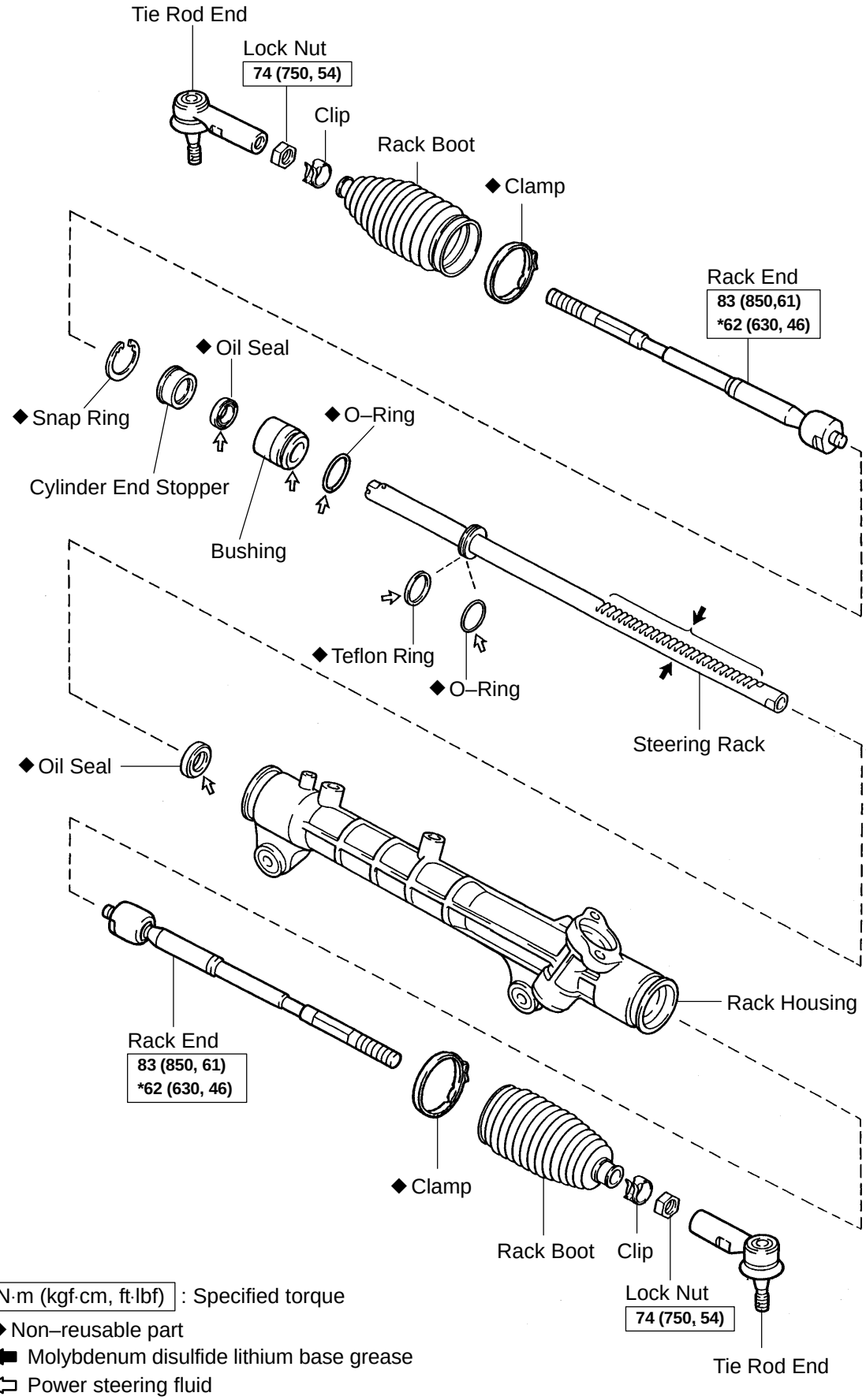
Tie Rod End
Lock Nut
74 (750, 54)
Clip
Rack Boot
◆Clamp
Rack End
83 (850,61)
*62 (630, 46)
◆Oil Seal
◆Snap Ring
◆O–Ring
Cylinder End Stopper
Bushing
◆Teflon Ring
◆O–Ring
Steering Rack
◆Oil Seal
Rack Housing
Rack End
83 (850, 61)
*62 (630, 46)
◆Clamp
Rack Boot
Clip
Lock Nut
74 (750, 54)
Tie Rod End
N·m (kgf·cm, ft·lbf) : Specified torque
◆Non–reusable part
Molybdenum disulfide lithium base grease
Power steering fluid
* For use with SST

N

F42462

2WD:

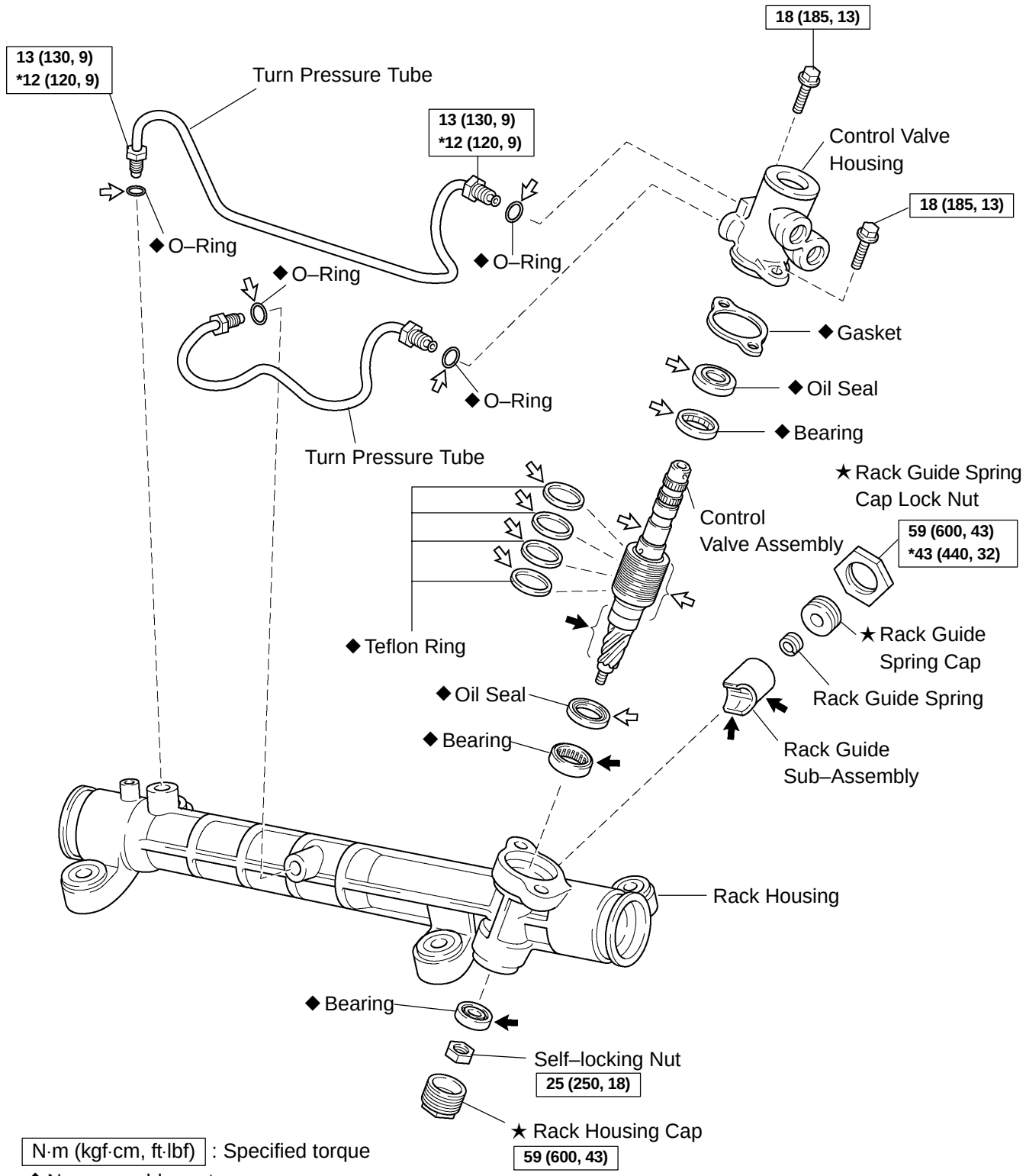

N·m (kgf·cm, ft·lbf) : Specified torque
◆ Non–reusable part
★ Precoated part
⬅ Molybdenum disulfide lithium base grease
⇦ Power steering fluid
* For use with SST

N

F42432

4WD:

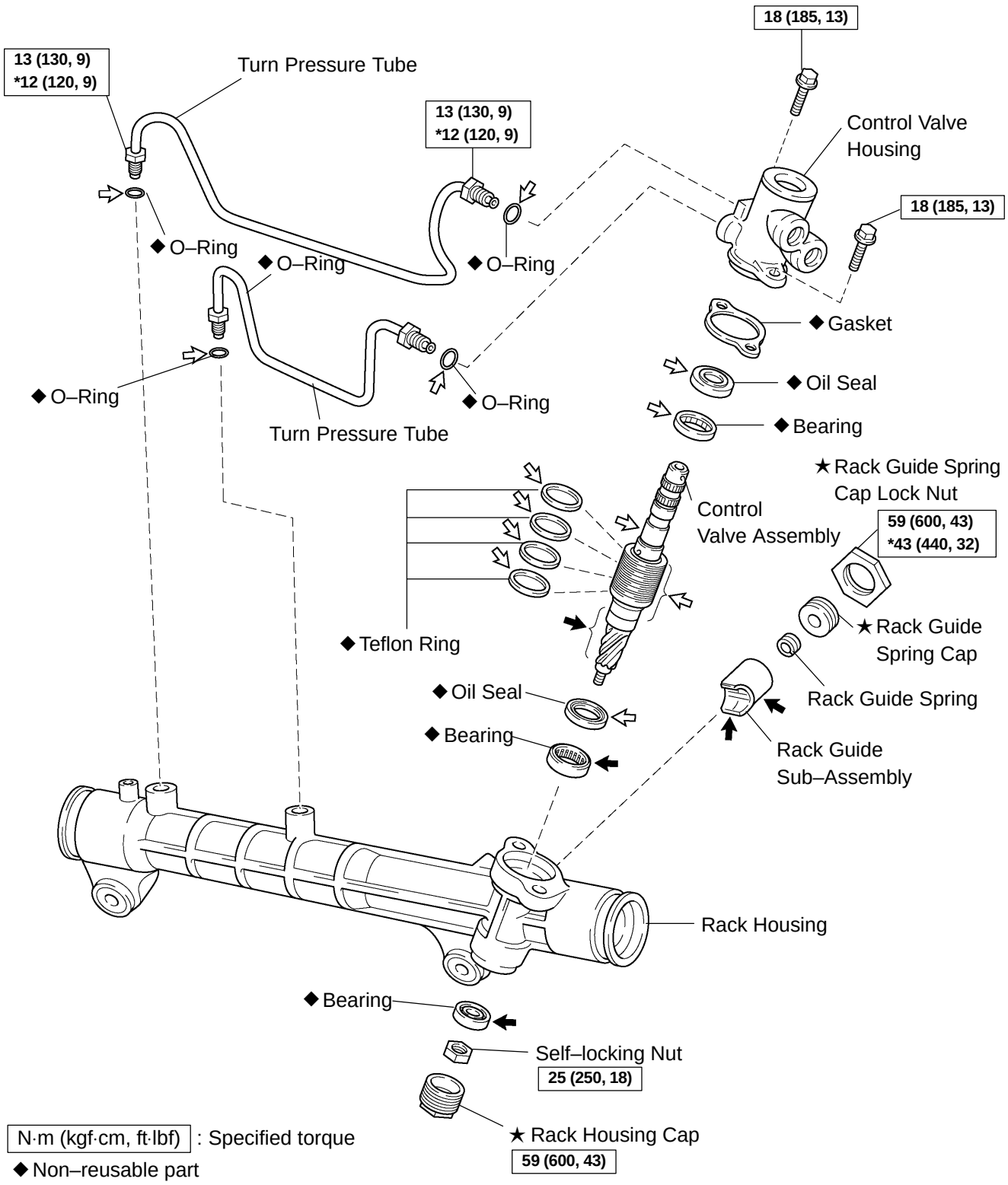

N·m (kgf·cm, ft·lbf) : Specified torque
◆ Non–reusable part
★ Precoated part
⬅ Molybdenum disulfide lithium base grease
⇦ Power steering fluid
* For use with SST

N

F42463

51084–01

OVERHAUL

NOTICE:

When installing, coat the parts indicated by the arrow with power steering fluid or molybdenum disulfide lithium base grease(See page 51–16).

1. PRECAUTION(See page 60–1)

2. DISCONNECT BATTERY NEGATIVE TERMINAL

3. INSPECT CENTER FRONT WHEEL

4. REMOVE HORN BUTTON ASSY(See page 50–8)

5. REMOVE STEERING WHEEL ASSY(See page 50–8)

SST 09950–50013 (09951–05010, 09952–05010, 09953–05020, 09954–05021)

6. REMOVE FRONT WHEELS

7. REMOVE ENGINE UNDER COVER LH

8. REMOVE ENGINE UNDER COVER RH

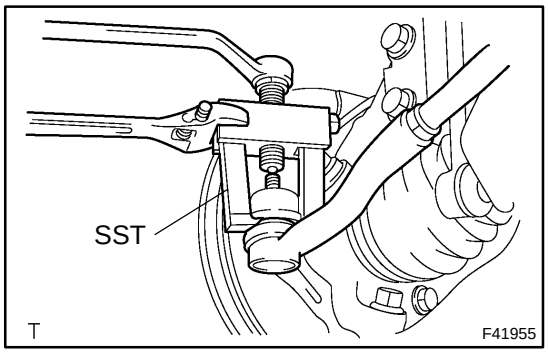

9. DISCONNECT TIE ROD END SUB–ASSY LH

(a) Remove the cotter pin and nut.

(b) Using SST, disconnect tie rod end sub–assy LH from the steering knuckle.

SST 09628–62011

10. DISCONNECT TIE ROD END SUB–ASSY RH

SST 09628–62011

HINT:

Remove the RH side by the same procedures as the LH side.

11. REMOVE COLUMN HOLE COVER SILENCER SHEET

12. DISCONNECT STEERING INTERMEDIATE SHAFT(See page 50–8)

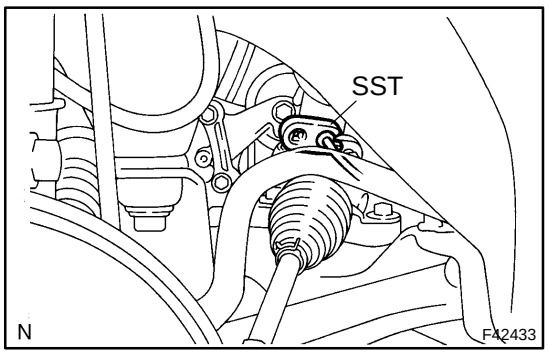

13. DISCONNECT PRESSURE FEED TUBE ASSY

(a) Using SST, disconnect the pressure feed tube assy.

SST 09023–38400

14. DISCONNECT RETURN TUBE SUB–ASSY

(a) Using SST, disconnect the return tube sub–assy.
SST 09023–38400

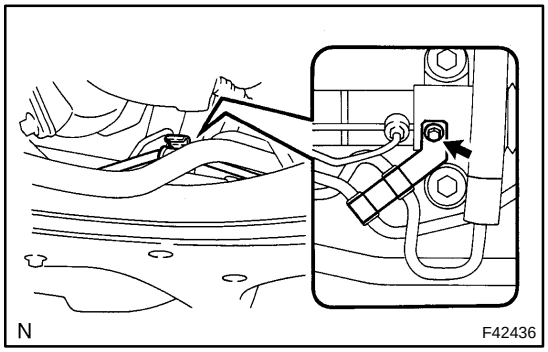

(b) Remove the bolt and disconnect the tube clamp.

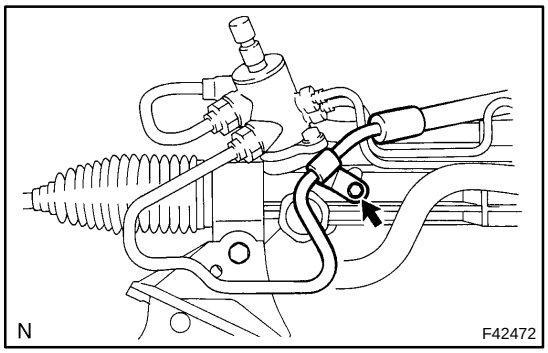

(c) 4WD:
(1) Remove the bolt and disconnect the tube clamp.

15. REMOVE FRONT STABILIZER LINK ASSY LH

(a) Remove the nut and disconnect the front stabilizer link assy LH from the stabilizer bar.

16. REMOVE FRONT STABILIZER LINK ASSY RH

HINT:
Remove the RH side by the same procedures as the LH side.

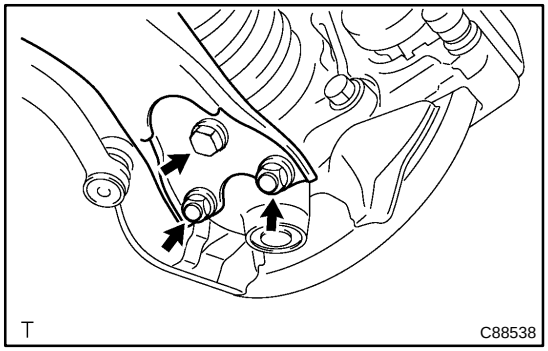

17. DISCONNECT FRONT SUSPENSION ARM SUB–ASSY LOWER NO.1 LH

(a) Remove the bolt and 2 nuts and disconnect the front suspension arm sub–assy lower No.1 LH from the lower ball joint.

18. DISCONNECT FRONT SUSPENSION ARM SUB–ASSY LOWER NO.1 RH

HINT:
Remove the RH side by the same procedures as the LH side.

19. REMOVE HOOD SUB–ASSY

20. REMOVE CYLINDER HEAD COVER NO.2

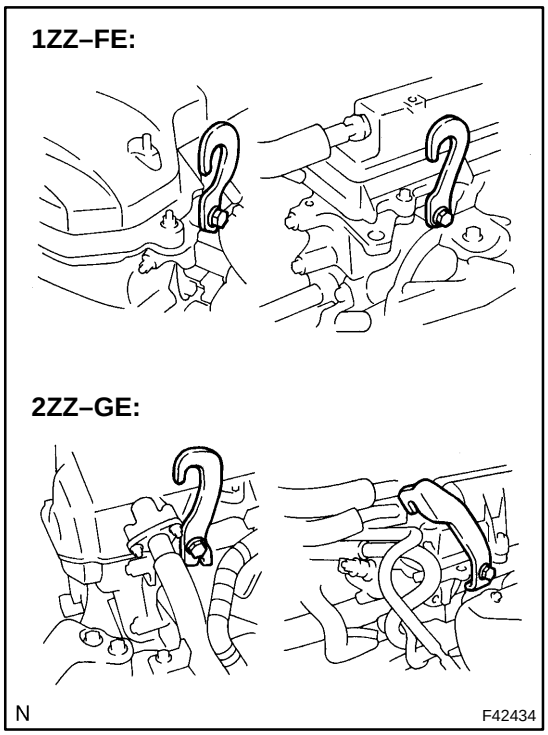

21. SUSPEND ENGINE ASSEMBLY

(a) Install the 2 engine hangers with the bolts in the correct direction.

Parts No.:

	1ZZ–FE	2ZZ–GE
Engine hanger	12281–15040 12281–22021	12281–88600 12282–88600
bolt	91512–B1016	91512–61020

Torque:
1ZZ–FE engine type:
38 N·m (390 kgf·cm, 28 ft·lbf)
2ZZ–GE engine type:
38 N·m (390 kgf·cm, 28 ft·lbf)

(b) Attach the engine chain hoist to the engine hangers.

CAUTION:
Do not attempt to hang the engine by hooking the chain to any other parts.

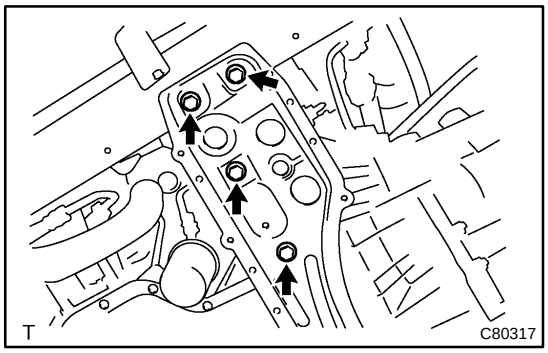

22. REMOVE FRONT SUSPENSION CROSSMEMBER SUB–ASSY

(a) Remove the 2 bolts and disconnect the center member from the engine mounting insulator FR.

(b) Remove the 2 bolts and disconnect the center member from the frame.

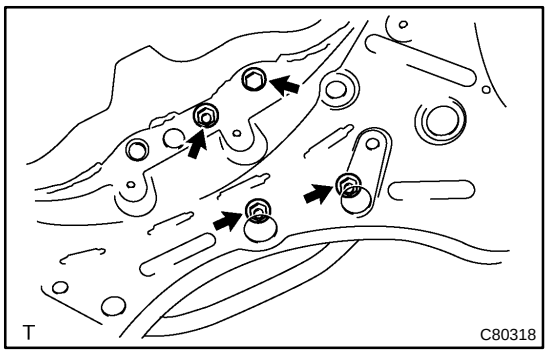

(c) Remove the bolt and 3 nuts, disconnect the engine mounting insulator RR from the crossmember.

(d) Using a transmission jack, support the crossmember.

(e) Remove the 4 bolts and front suspension crossmember sub–assy with the steering gear assy.

23. REMOVE STEERING COLUMN HOLE COVER SUB–ASSY NO.1

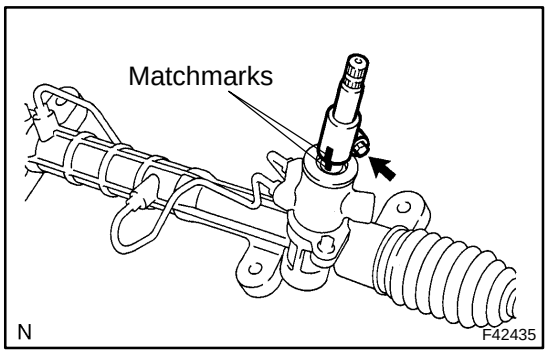

24. REMOVE STEERING INTERMEDIATE SHAFT

(a) Place matchmarks on the intermediate shaft with control valve.

(b) Remove the bolt and steering intermediate shaft.

25. REMOVE RACK & PINION POWER STEERING GEAR ASSY

(a) Remove the 4 bolts and rack & pinion power steering gear assy from the crossmember.

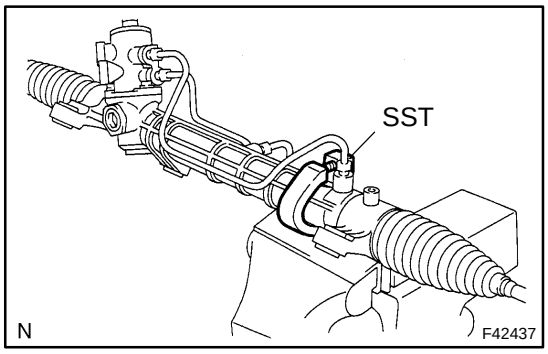

26. FIX RACK & PINION POWER STEERING GEAR ASSY

(a) Using SST, secure the rack & pinion power steering gear assy in a vise.
SST 09612–00012

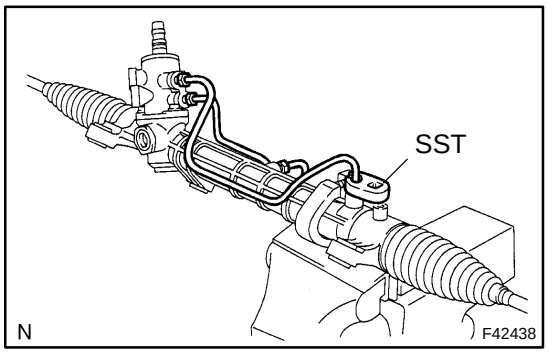

27. REMOVE STEERING LEFT TURN PRESSURE TUBE

(a) Using SST, remove the left turn pressure tube.
SST 09023–38200

(b) Remove the 2 O–rings from the left turn pressure tube.

28. REMOVE STEERING RIGHT TURN PRESSURE TUBE

(a) Using SST, remove the right turn pressure tube.
SST 09023–38200

(b) Remove the 2 O–rings from the right turn pressure tube.

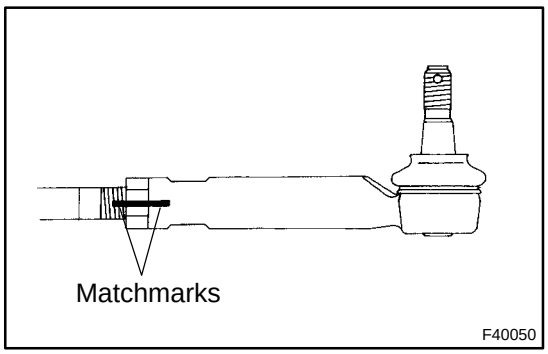

29. REMOVE TIE ROD END SUB–ASSY LH

(a) Place matchmarks on the tie rod end with rack end.

(b) Loosen the lock nut, and remove the tie rod end and lock nut.

30. REMOVE TIE ROD END SUB–ASSY RH

HINT:

Remove the RH side by the same procedures as the LH side.

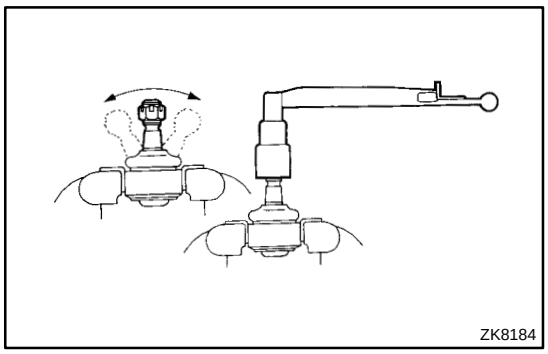

31. INSPECT TIE ROD END SUB–ASSY LH

(a) Secure the tie rod end LH in a vise.
(b) Install the nut to the stud bolt.
(c) Flip the ball joint stud back and forth 5 times.
(d) Using a torx wrench, turn the nut continuously at a rate of 2 – 4 seconds per 1 turn and take the torque reading of the 5th turn.
Turning torque:
0.49 – 3.43 N·m (5.0 – 35 kgf·cm, 4.34 – 30.38 in.·lbf)

32. INSPECT TIE ROD END SUB–ASSY RH

HINT:
Inspect the RH side by the same procedures as the LH side.

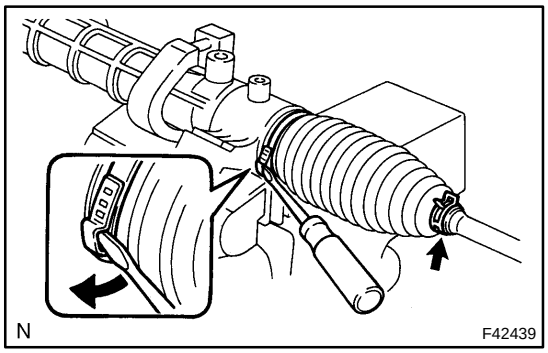

33. REMOVE STEERING RACK BOOT NO.1

(a) Remove the steering rack boot clip.
(b) Using a screwdriver, remove the clamp and steering rack boot No.1.

34. REMOVE STEERING RACK BOOT NO.2

HINT:
Remove the steering rack boot No.2 by the same procedures as the No.1.

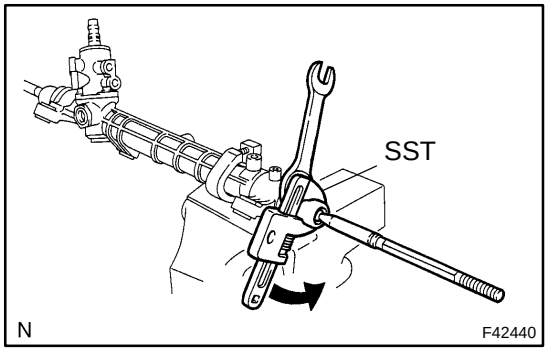

35. REMOVE STEERING RACK END SUB–ASSY

(a) Using a spanner, hold the steering rack steadily and using SST, remove the rack end.
SST 09922–10010

NOTICE:
Use SST 09922–10010 in the direction shown in the illustration.

HINT:
Mark the RH and LH rack ends.

(b) Use the same manner described above to the other side.

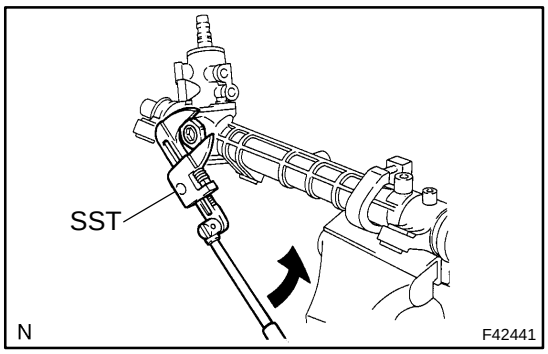

36. REMOVE RACK GUIDE

(a) Using SST, remove the rack guide spring cap nut.
SST 09922–10010

NOTICE:

Use SST 09922–10010 in the direction shown in the illustration.

(b) Using a hexagon wrench (19 mm), remove the rack guide spring cap.

(c) Remove the conical spring, rack guide spring and rack guide.

37. REMOVE POWER STEERING CONTROL VALVE

(a) Remove the rack housing cap.

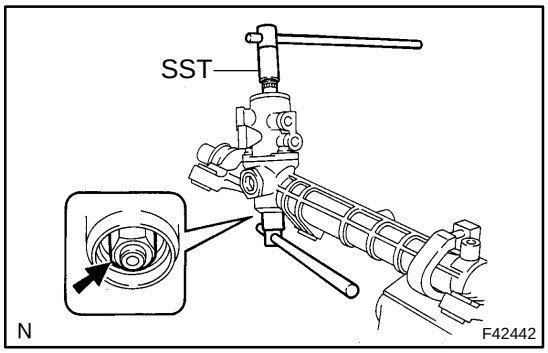

(b) Using SST, hold the control valve shaft and remove the self–locking nut.
SST 09616–00011

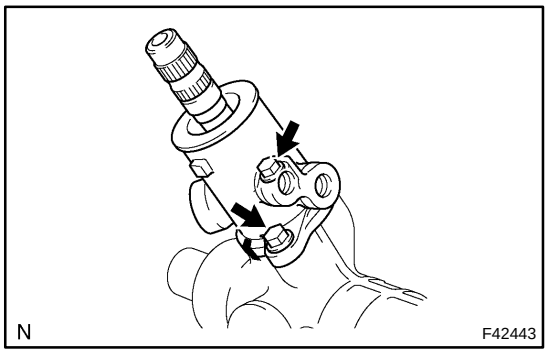

(c) Remove the 2 bolts and power steering control valve.

(d) Remove the gasket.

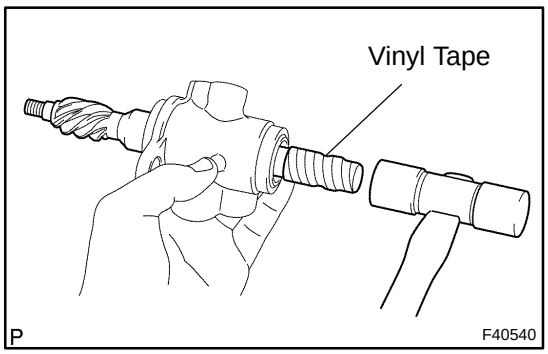

(e) To prevent oil seal lip damage, wind vinyl tape around the serrated part of the control valve.

(f) Using a plastic hammer, remove the control valve with oil seal from the control valve housing.

(g) Remove the oil seal from the control valve.

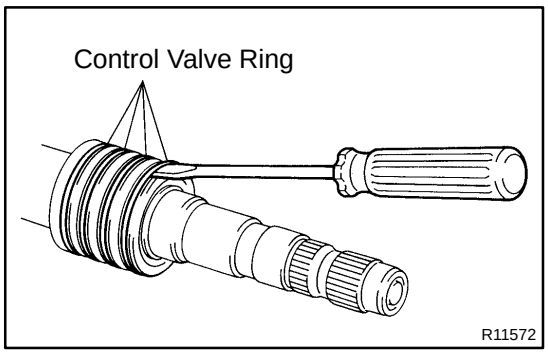

(h) Using a screwdriver, remove the 4 control valve rings.

NOTICE:

Be careful not to damage the grooves for the control valve ring.

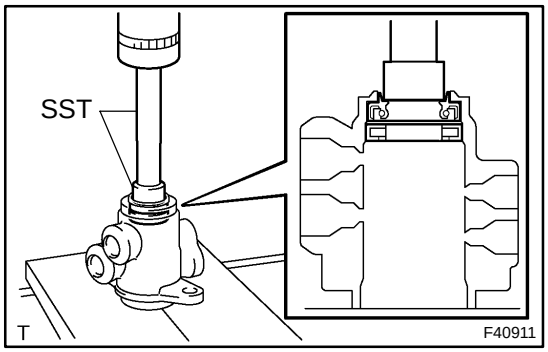

38. REMOVE POWER STEERING CONTROL VALVE UPPER OIL SEAL

(a) Using SST and a press, remove the control valve upper bearing and upper oil seal from the control valve housing.

SST 09950–70010 (09951–07150), 09950–60010 (09951–00260)

39. REMOVE CYLINDER END STOPPER

(a) Using snap ring pliers, remove the snap ring.

(b) Pull out the cylinder end stopper.

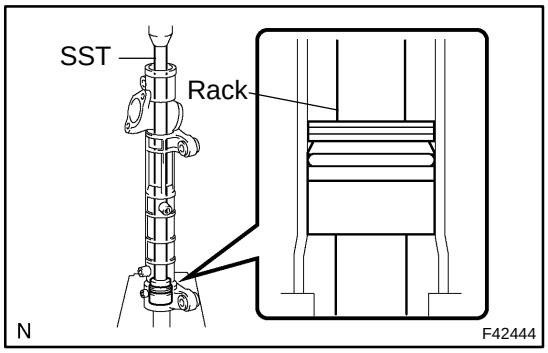

40. REMOVE POWER STEERING RACK

(a) Using SST and a press, remove the steering rack with the bushing.

SST 09612–24014 (09612–10061)

NOTICE:

Take care not to drop the steering rack.

(b) Remove the O–ring from the bushing.

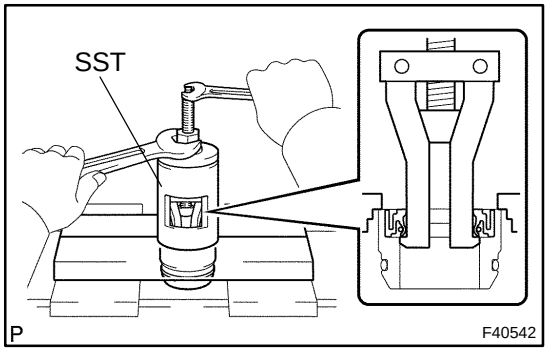

41. REMOVE POWER STEERING RACK BUSH SUB–ASSY

(a) Remove the power steering rack bush from the power steering rack.

(b) Using SST, remove the rack bush oil seal.

SST 09612–24014 (09613–22011)

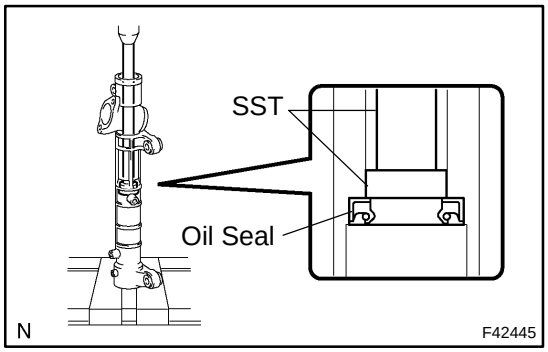

42. REMOVE POWER STEERING CYLINDER TUBE OIL SEAL

(a) Using SST and a press, remove the power steering cylinder tube oil seal.

SST 09950–60010 (09951–00260), 09950–70010 (09951–07360)

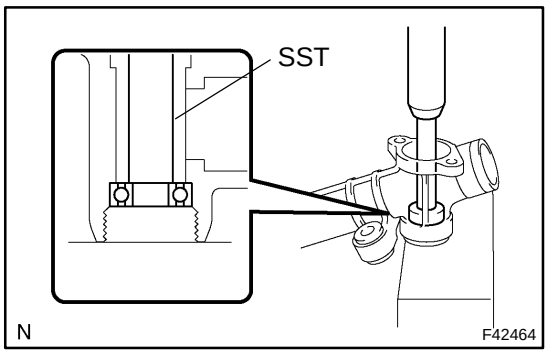

43. REMOVE POWER STEERING CONTROL VALVE LOWER BEARING

(a) Using SST and a press, remove the power steering control valve lower bearing.
SST 09950–70010 (09951–07100)

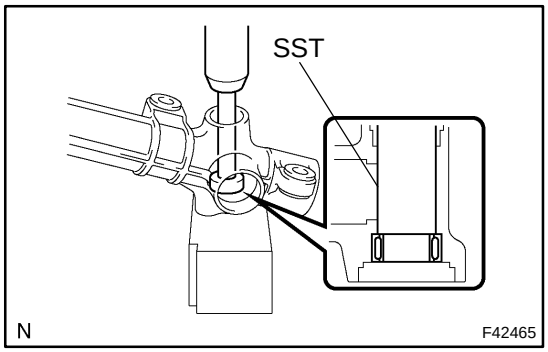

(b) Using SST and a press, remove the power steering control valve center bearing.

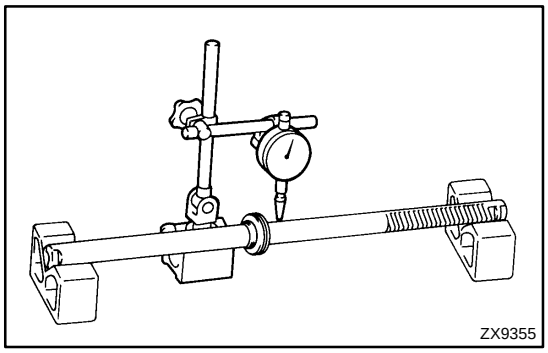

44. INSPECT POWER STEERING RACK

(a) Using a screwdriver, remove the O–ring from the power steering rack bush sub–assy.

(b) Using a dial indicator, check the steering rack for run out and for teeth wear and damage.
Maximum run out: 0.1 mm (0.004 in.)

(c) Check the back surface for wear and damage.

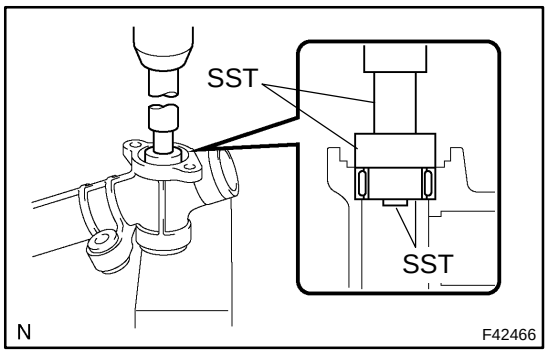

45. INSTALL POWER STEERING CONTROL VALVE LOWER BEARING

(a) Coat a new bearing with molybdenum disulfide lithium base grease.

(b) Using SSTand a press, install in the control valve center bearing.
SST 09950–60010 (09951–00220, 09951–00280, 09952–06010), 09950–70010 (09951–07100)

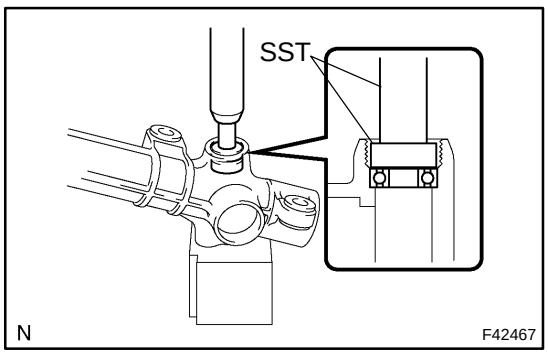

(c) Coat a new bearing with molybdenum disulfide lithium base grease.

(d) Using SST and a press, install the control valve lower bearing.
SST 09950–60010 (09951–00220, 09951–00280, 09952–06010), 09950–70010 (09951–07100)

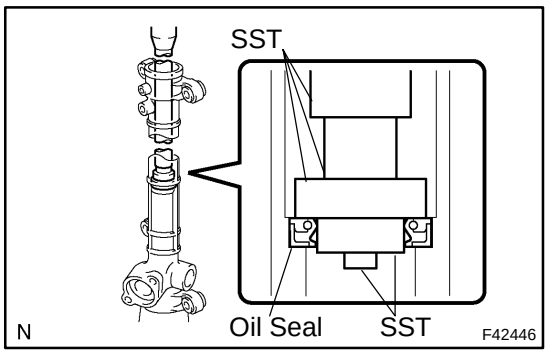

46. INSTALL POWER STEERING CYLINDER TUBE OIL SEAL

(a) Coat a new power steering cylinder tube oil seal lip with power steering fluid.

(b) Using SST and a press, install the power steering cylinder tube oil seal.

SST 09950–60010 (09951–00240, 09951–00400, 09952–06010), 09950–70010 (09951–07360)

NOTICE:

- **Make sure that the power steering cylinder tube oil seal is installed facing in the correct direction.**
- **Take care so that the power steering cylinder tube oil seal will not be reversed with you install it.**

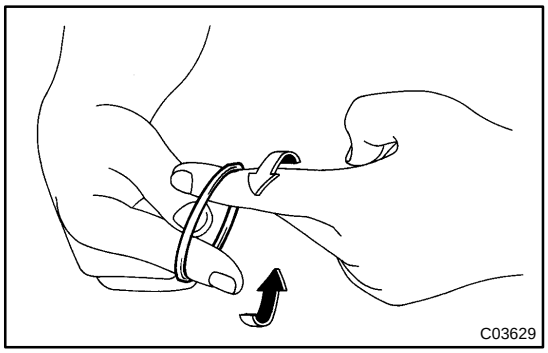

47. INSTALL POWER STEERING RACK

(a) Coat a new power piston O–ring with power steering fluid and install it to the steering rack.

(b) Coat a new power piston oil seal with power steering fluid.

(c) Expand the power piston oil seal with your fingers.

NOTICE:

Be careful not to expand the power piston oil seal excessively.

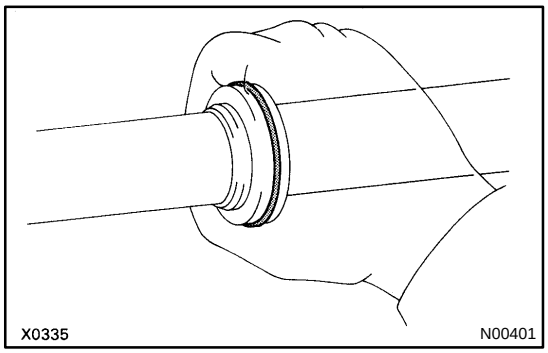

(d) Install the power piston oil seal to the steering rack, and settle it down with your fingers.

SST 09631–16020

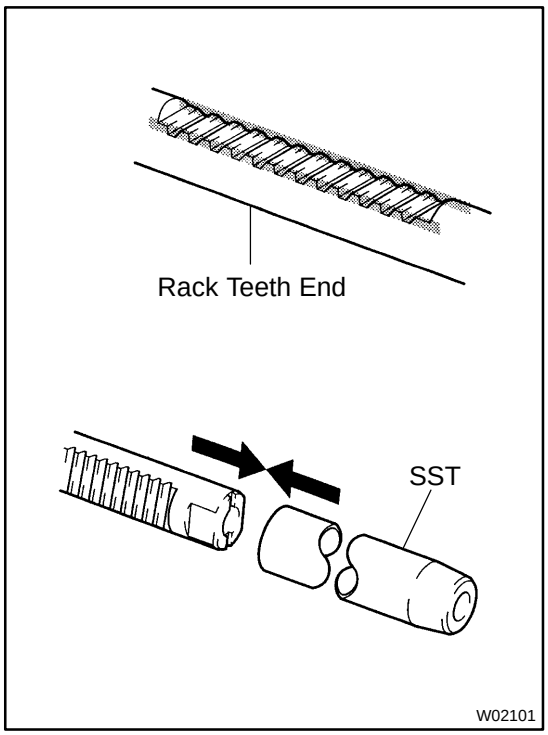

(e) Install SST to the steering rack.
SST 09631–16020

HINT:
If necessary, scrape the burrs off the steering rack teeth end and burnish.

(f) Coat the SST with power steering fluid.
(g) Install the steering rack into the rack housing.
(h) Remove the SST.
SST 09631–16020

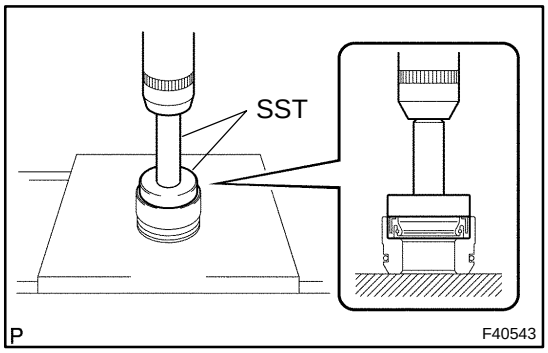

48. INSTALL POWER STEERING RACK BUSH SUB–ASSY

(a) Using SST and a press, install the rack bush oil seal to the power steering rack bush.
SST 09950–60010 (09951–00400), 09950–70010 (09951–07100)

NOTICE:
Make sure that the rack bush oil seal is installed facing in the correct direction.

(b) Coat a new O–ring with power steering fluid and install it to the power steering rack bush.

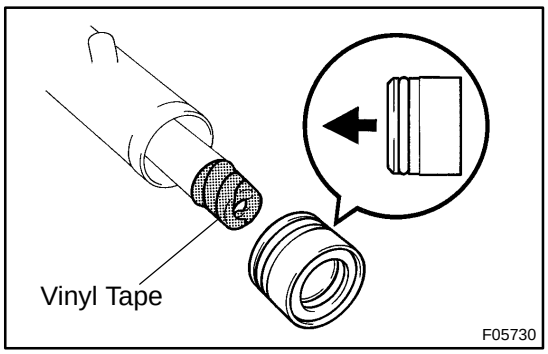

(c) To prevent rack bush oil seal lip damage, wind vinyl tape around the steering rack end, and apply power steering fluid.
(d) Install the rack bush to the steering rack.

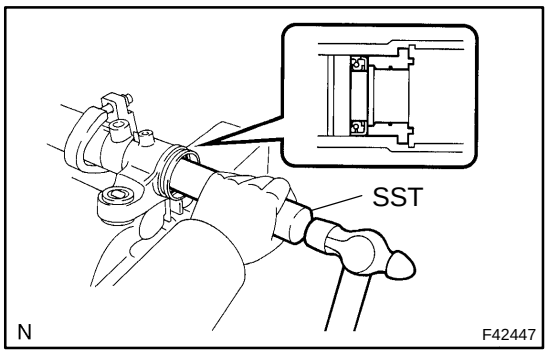

49. INSTALL CYLINDER END STOPPER

(a) Using SST and a hammer, drive in the cylinder end stopper.
SST 09612–22011

(b) Using snap ring pliers, install a new snap ring to the rack housing.

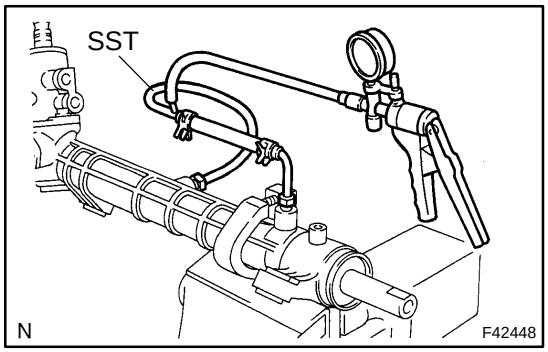

50. INSPECT RACK & PINION POWER STEERING GEAR ASSY

(a) Install SST to the rack housing.
SST 09631–12071 (09633–00010)

(b) Apply vacuum of 53 kPa (400 mmHg, 15.75 in. Hg) for about 30 seconds.

(c) Check that there is no change in the vacuum.

If there is a change in the vacuum, check the installation of the oil seals.

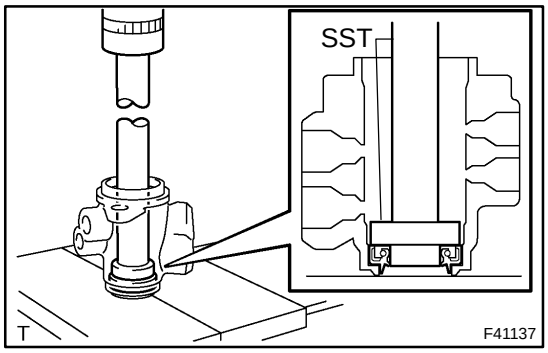

51. INSTALL POWER STEERING CONTROL VALVE UPPER OIL SEAL

(a) Coat an upper bearing and a new upper oil seal with power steering fluid.

(b) Using SST and a press, install the upper oil seal.
SST 09950–60010 (09951–00180, 09951–00320, 09952–06010), 09950–70010 (09951–07150)

NOTICE:

Make sure that the oil seal is installed facing in the correct direction.

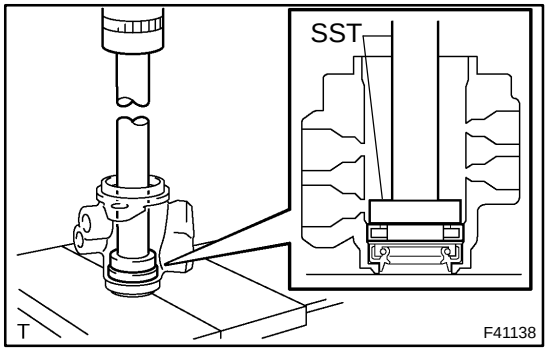

(c) Using SST and a press, install the upper bearing.
SST 09950–60010 (09951–00190, 09951–00360, 09952–06010), 09950–70010 (09951–07150)

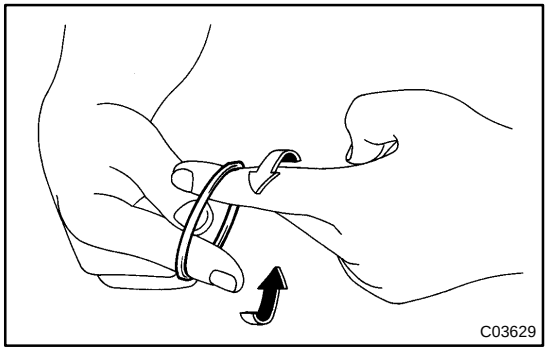

52. INSTALL POWER STEERING CONTROL VALVE

(a) Expand 4 new control valve rings with your fingers.

NOTICE:

Be careful not to over expand the valve ring.

(b) Coat the 4 control valve rings with power steering fluid.

(c) Install the 4 control valve rings to the control valve, and settle them down with your fingers.

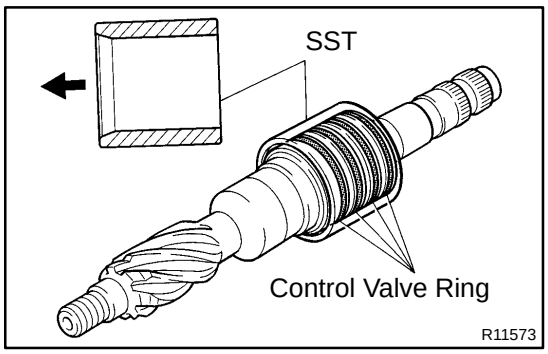

(d) Carefully slide the tapered end of SST over the control valve rings until they fit to the control valve.
SST 09612–22011, 09616–00011, 09631–20081

NOTICE:
Be careful not to damage the control valve rings.

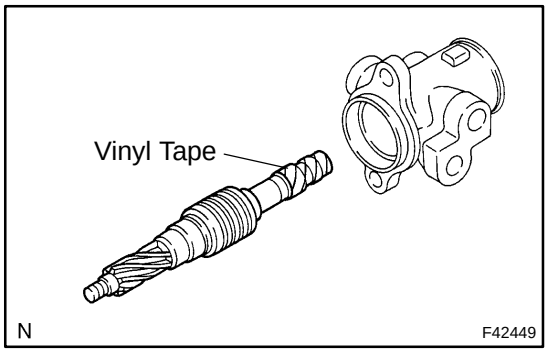

(e) To prevent oil seal lip damage, wind vinyl tape around the serrated part of the control valve.
(f) Install the control valve to the valve housing.

NOTICE:
Be careful not to damage the control valve rings and oil seal lip.

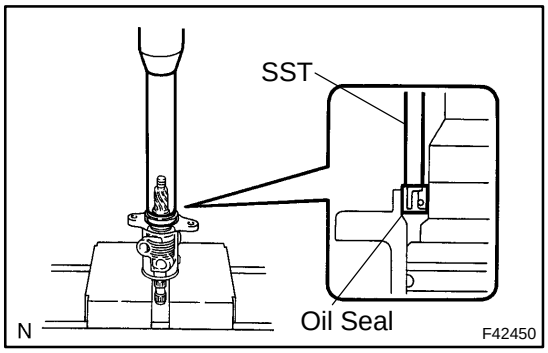

(g) Coat a new oil seal lip with power steering fluid.
(h) Using SST and a press, install the oil seal.
SST 09612–22011, 09616–00011, 09631–20081

NOTICE:
Make sure that the oil seal is installed facing in the correct direction.

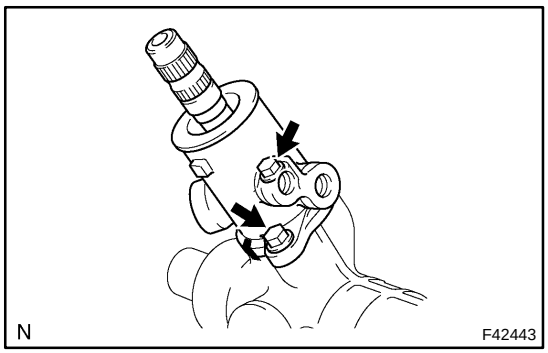

(i) Apply grease to the needle bearing.
(j) Install a new gasket to the valve housing.
(k) Wind vinyl tape around the serration part of the control valve.
(l) Install the valve housing to the rack housing with the 2 bolts.
Torque: 18 N·m (185 kgf·cm, 13 ft·lbf)

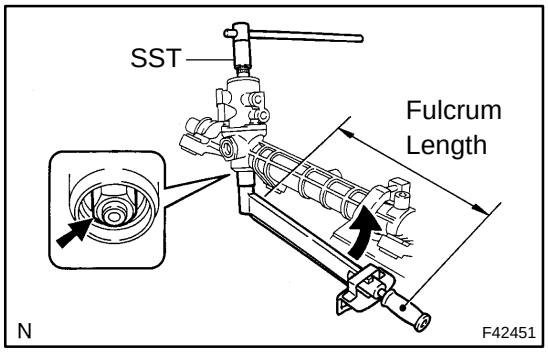

(m) Using SST, stop the control valve shaft rotation and install the self–locking nut.
SST 09612–22011, 09616–00011, 09631–20081
Torque: 25 N·m (250 kgf·cm,18 ft·lbf)
(n) Apply sealant to 2 or 3 threads of the rack housing cap.
Sealant:
Part No. 08833–00080, THREE BOND 1344, LOCTITE 242 or equivalent
(o) Install the rack housing cap.
Torque: 59 N·m (600kgf·cm, 43 ft·lbf)

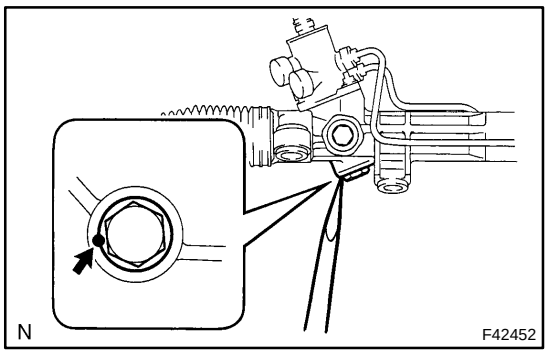

(p) Using a punch and a hummer, stake the rack housing cap and rack housing.

53. INSTALL RACK GUIDE

(a) Apply molybdenum disulfide lithium base grease to the contact surface of the power steering rack and of the rack guide.

(b) Install the rack guide and compression spring to the rack housing.

(c) Apply sealant to 2 or 3 threads of the rack guide spring cap.
Sealant:
Part No. 08833–00080, THREE BOND 1344, LOCTITE 242or equivalent

(d) Temporarily install the rack guide spring cap.

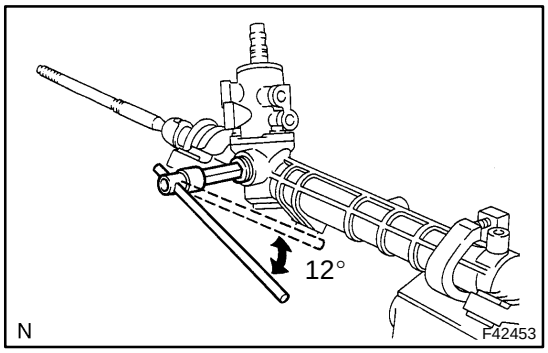

54. INSPECT TOTAL PRELOAD

(a) To prevent the steering rack teeth from damaging the oil seal lip, temporarily install the RH and LH rack ends.

(b) Torque the rack guide spring cap.
Torque: 25 N·m (250 kgf·cm, 18 ft·lbf)

(c) Back off the rack guide spring cap 12°.

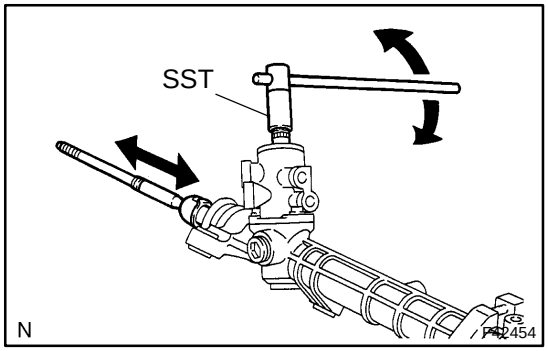

(d) Using SST, turn the control valve shaft right and left 1 or 2 times.
SST 09616–00011, 09922–10010

(e) Loosen the rack guide spring cap until the rack guide spring is not functioning.

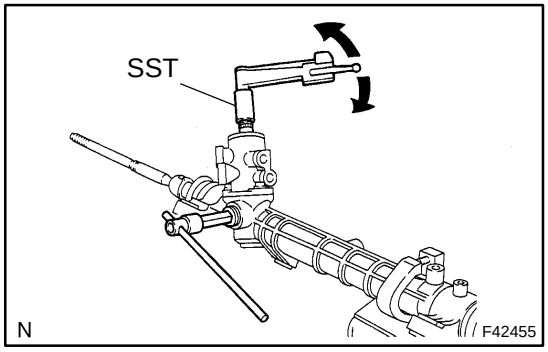

(f) Using SST and torque wrench, tighten the rack guide spring cap until the preload is within the specification.
SST 09616–00011, 09922–10010
Preload (turning):
1.0 – 1.8 N·m (20 – 18 kgf·cm, 8.6 – 15.7 ft·lbf)

(g) Apply sealant to 2 or 3 threads of the rack guide spring cap lock nut.
Sealant:
Part No. 08833–00080, THREE BOND 1344, LOCTITE 242 or equivalent

(h) Temporarily install the lock nut.

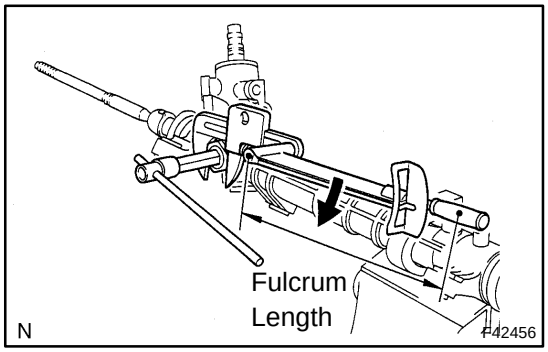

(i) Using a hexagon wrench (19 mm), hold the rack guide spring cap and using SST, torque the nut.
SST 09616–00011, 09922–10010
Torque: 43 N·m (440 kgf·cm, 32 ft·lbf)

NOTICE:
Use SST 09922–10010 in the direction shown in the illustration.

HINT:
Use a torque wrench with a fulcrum length of 345 mm (13.58 in.).

(j) Recheck the total preload.
Preload (turning):
1.0 – 1.8 N·m (10 – 18 kgf·cm, 8.6 – 15.7 ft·lbf)

(k) Remove the RH and LH rack ends.

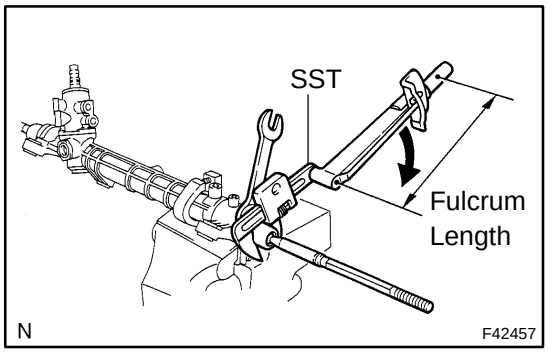

55. INSTALL STEERING RACK END SUB–ASSY

(a) Using a spanner, hold the steering rack steadily and using SST, install the 2 rack ends.
SST 09922–10010
Torque: 62 N·m (630 kgf·cm, 46 ft·lbf)

NOTICE:
Use SST 09922–10010 in the direction shown in the illustration.

HINT:
- Using SST, hold the rack and install the rack and sub–assy.
- Use a torque wrench with a fulcrum length of 380 mm (14.96 in.).

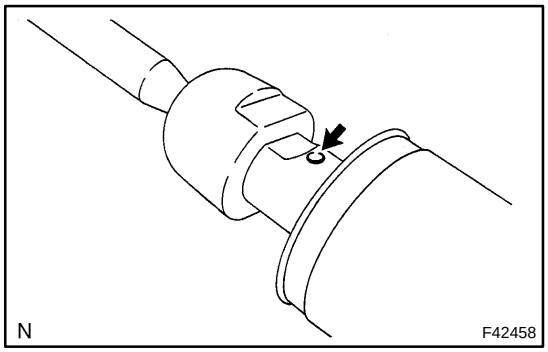

(b) Ensure that the steering rack hole is not clogged with grease.

HINT:
If the hole is clogged, the pressure inside the boot will change after it is assembled and steering wheel is turned.

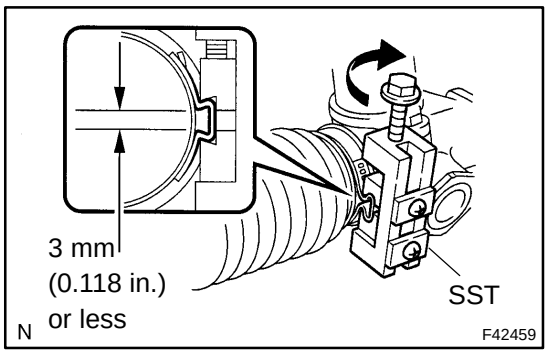

56. INSTALL STEERING RACK BOOT NO.2

(a) Install the steering rack boot No.2.

(b) Using SST, tighten the steering rack boot No.2 clamp, as shown in the illustration.

SST 09521–24010

Clearance: 3.0 mm (0.118 in.) or less

NOTICE:

Be careful not to damage the boot.

(c) Using a pliers, install the rack boot clip.

57. INSTALL STEERING RACK BOOT NO.1

HINT:

Install the rack boot No.1 by the same procedures as the rack boot No.2.

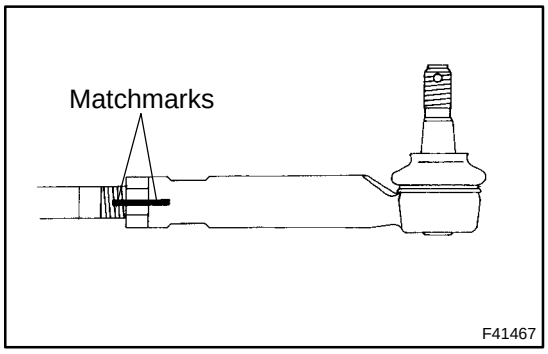

58. INSTALL TIE ROD END SUB–ASSY LH

(a) Screw the lock nut and tie rod end sub–assy LH onto the rack end until the matchmarks are aligned.

HINT:

After adjusting toe–in, torque the lock nut.

59. INSTALL TIE ROD END SUB–ASSY RH

HINT:

Install the RH side by the same procedures as the LH side.

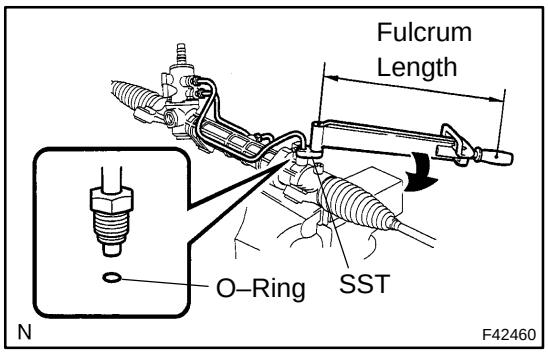

60. INSTALL STEERING RIGHT TURN PRESSURE TUBE

(a) Coat 2 new O–rings with power steering fluid and install them to the right turn pressure tube.

(b) Using SST, install the right turn pressure tube to the steering gear assy.

SST 09023–38200

Torque:12 N·m (120 kgf·cm, 8 ft·lbf)

HINT:

- Use a torque wrench with a fulcrum length of 345 mm (13.58 in.).
- This torque value is effective in the case that SST is parallel to a torque wrench.

61. INSTALL STEERING LEFT TURN PRESSURE TUBE

(a) Coat 2 new O–rings with power steering fluid and install them to the left turn pressure tube.

(b) Using SST, install the left turn pressure tube to the steering gear assy.

SST 09023–38200

Torque 12 N·m (120 kgf·cm, 8 ft·lbf)

HINT:

- Use a toque wrench with a fulcrum length of 345 mm (13.58 in.).
- This torque value is effective in the case that SST is parallel to a torque wrench.

62. INSTALL RACK & PINION POWER STEERING GEAR ASSY

(a) Install the power steering gear assy with the 4 bolts and nuts.
Torque 58 N·m (590 kgf·cm, 43 ft·lbf)

NOTICE:

- **The 4 bush must be securely installed to the power steering gear assy.**
- **When tightening the installation bolt for power steering gear, the bush should not bitten in.**

(b) 4WD:
(1) Install the power steering gear assy with the 2 bolts and nuts.
Torque 82 N·m (835 kgf·cm, 60 ft·lbf)

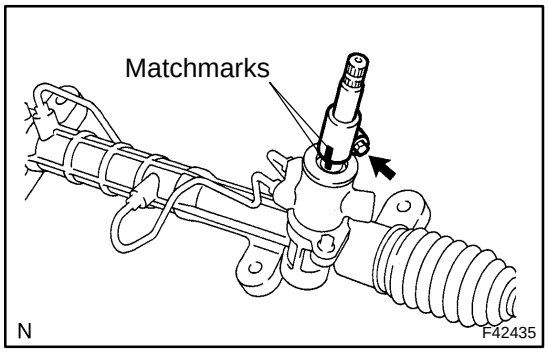

63. INSTALL STEERING INTERMEDIATE SHAFT

(a) Align the matchmarks on the steering intermediate shaft with steering pinion shaft.
(b) Install the bolt.
Torque: 35 N·m (360 kgf·cm, 26 ft·lbf)

64. INSTALL STEERING COLUMN HOLE COVER SUB–ASSY NO.1

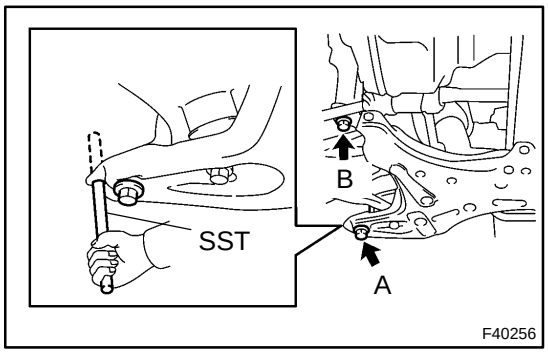

65. INSTALL FRONT SUSPENSION CROSSMEMBER SUB–ASSY

(a) Using SST, align the holes of the front suspension member RH and body, and temporarily tighten the bolt in order of A, B.
SST 09670–00010

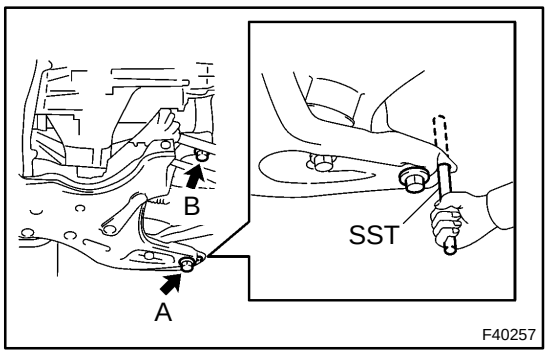

(b) Using SST, align the holes of the front suspension member LH and body, and temporarily tighten the bolt in order of A, B.
SST 09670–00010
(c) Using SST, align the holes of the front suspension member RH and body, and torque the bolt A and B.
SST 09670–00010
Torque:
Bolt A: 157 N·m (1,600 kgf·cm, 116 ft·lbf)
Bolt B: 157 N·m (1,600 kgf·cm, 116 ft·lbf)
(d) Using SST, align the holes of the front suspension member LH and body, and torque the bolt A and B.
SST 09670–00010

Torque:
Bolt A: 157 N·m (1,600 kgf·cm, 116 ft·lbf)
Bolt B: 157 N·m (1,600 kgf·cm, 116 ft·lbf)

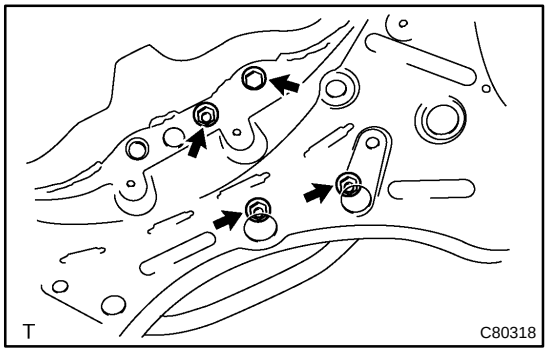

(e) Connect the engine mounting insulator RR to the cross-member with the bolt and 3 nuts.
Torque: 52 N·m (530 kgf·cm, 38 ft·lbf)

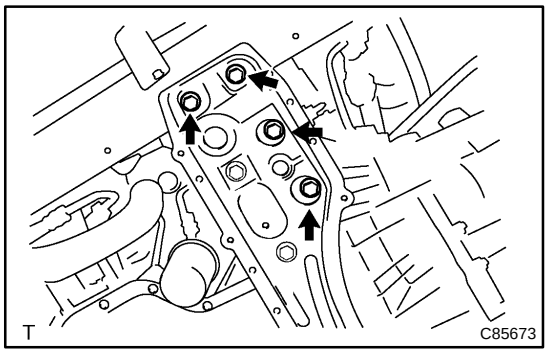

(f) Install the center member to the frame with the 2 bolts.
Torque: 39 N·m (400 kgf·cm, 29 ft·lbf)
(g) Connect the engine mounting insulator FR to the center member with the 2 bolts.
Torque: 52 N·m (530 kgf·cm, 38 ft·lbf)

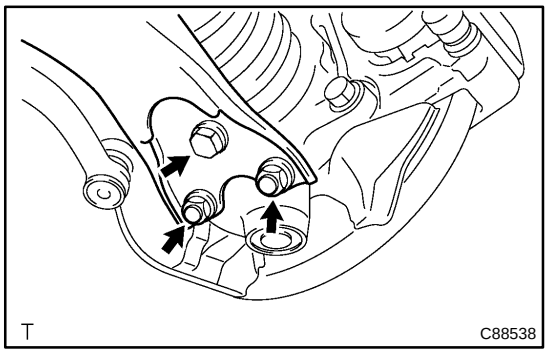

66. CONNECT FRONT SUSPENSION ARM SUB–ASSY LOWER NO.1 LH

(a) Connect the front suspension lower arm No.1 to the lower ball joint with the bolt and 2 nuts.
Torque: 89 N·m (910 kgf·cm, 66 ft·lbf)

67. CONNECT FRONT SUSPENSION ARM SUB–ASSY LOWER NO.1 RH

HINT:
Use the same manner described above to the other side.

68. CONNECT FRONT STABILIZER LINK ASSY LH

(a) Connect the front stabilizer link assy LH with the nut.
Torque: 74 N·m (750 kgf·cm, 55 ft·lbf)

69. CONNECT FRONT STABILIZER LINK ASSY RH

HINT:
Use the same manner described above to the other side.

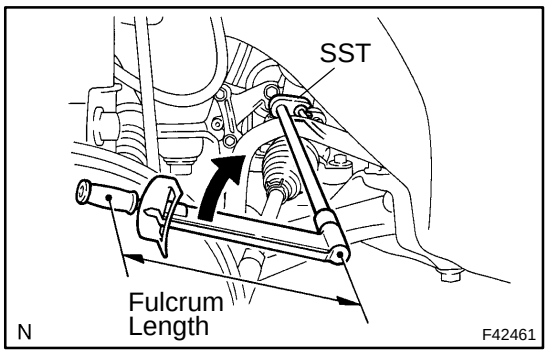

70. CONNECT RETURN TUBE SUB–ASSY

(a) Using SST, connect the return tube sub–assy.
SST 09023–38400
Torque: 23 N·m (235 kgf·cm, 17 ft·lbf)

HINT:

- Use a torque wrench with a fulcrum length of 345 mm (13.58 in.).
- This torque value is effective in case that SST is parallel to a torque wrench.

71. CONNECT PRESSURE FEED TUBE ASSY

(a) Using SST, connect the pressure feed tube assy.
SST 09023–38400
Torque: 23 N·m (235 kgf·cm, 17 ft·lbf)

HINT:

- Use a torque wrench with a fulcrum length of 345 mm (13.58 in.).
- This torque value is effective in case that SST is parallel to a torque wrench.

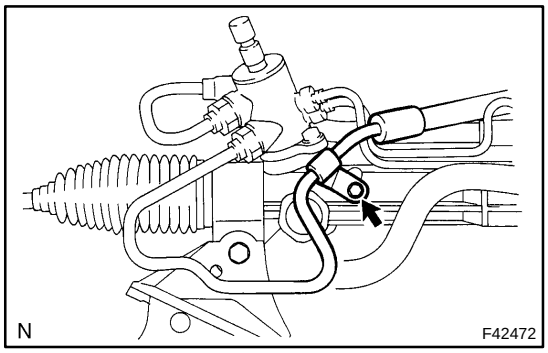

(b) 4WD:
(1) Connect the tube clamp with the bolt.
Torque: 7.8 N·m (80 kgf·cm, 69 ft·lbf)

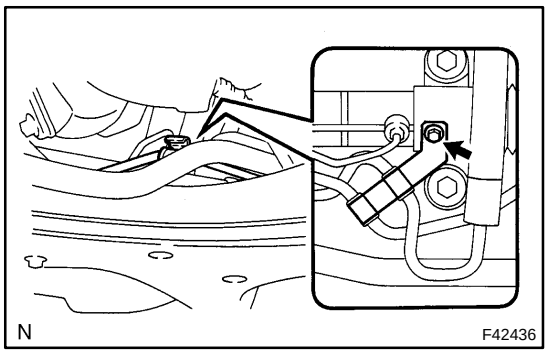

(c) Connect the tube clamp with the bolt.
Torque: 7.8 N·m (80 kgf·cm, 69 ft·lbf)

72. CONNECT STEERING INTERMEDIATE SHAFT(See page 50–8)

73. CONNECT TIE ROD END SUB–ASSY LH

(a) Connect the tie rod end sub–assy LH with the nut.
Torque: 49 N·m (500 kgf·cm, 36 ft·lbf)

(b) Install a new cotter pin.

NOTICE:

If the holes for a new cotter pin are not aligned, tighten the nut further up to 60°.

74. CONNECT TIE ROD END SUB–ASSY RH

HINT:

Use the same manner described above to the other side.

75. INSTALL ENGINE UNDER COVER LH

76. INSTALL ENGINE UNDER COVER RH

77. INSTALL FRONT WHEELS

Torque: 103 N·m (1,050 kgf·cm, 76 ft·lbf)

78. INSPECT CENTER FRONT WHEEL

79. INSTALL COLUMN HOLE COVER SILENCER SHEET

(a) Install the column hole cover silencer sheet with the 2 nuts.

80. ADD POWER STEERING FLUID

81. BLEED POWER STEERING FLUID(See page 51–1)

82. INSPECT FLUID LEAK

83. INSTALL CYLINDER HEAD COVER NO.2

(a) Install the cylinder head cover No.2 with 2 nuts and 2 clips.

Torque: 7.0 N·m (71 kgf·cm, 62 ft·lbf)

84. INSTALL HOOD SUB–ASSY

85. INSPECT HOOD SUB–ASSY

86. ADJUST HOOD SUB–ASSY(See page 75–1)

87. CENTER SPIRAL CABLE(See page 50–8)

88. INSTALL STEERING WHEEL ASSY(See page 50–8)

89. INSTALL HORN BUTTON ASSY(See page 50–8)

90. INSPECT AND ADJUST FRONT WHEEL ALIGNMENT(See page 26–6)

91. INSPECT SRS WARNING LIGHT(See page 05–543)

REFRIGERANT

ON–VEHICLE INSPECTION

550J8–01

1. INSPECT REFRIGERANT PRESSURE WITH MANIFOLD GAUGE SET

(a) This is a method in witch the trouble is located by using a manifold gauge set. Read the manifold gauge pressure when the these conditions are established.

Test conditions:

- Temperature at the air inlet with the switch set at RECIRC is 30 – 35 °C (86 – 95 °F)
- Engine running at 1500 rpm
- Blower speed control switch at ”HI” position
- Temperature control dial at ”COOL” position
- A/C switch ON
- Fully open doors

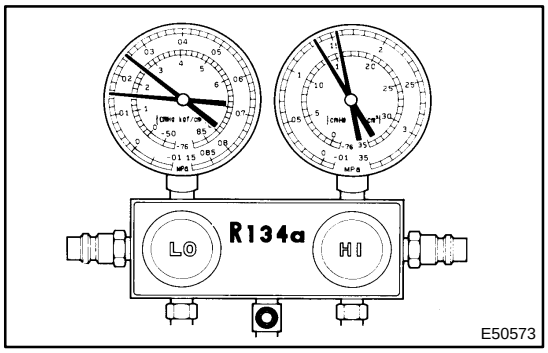

E50573

(1) Normally functioning refrigeration system.

Gauge reading:

Low pressure side:

0.15 – 0.25 MPa (1.5 – 2.5 kgf/cm^2)

High pressure side:

1.37 – 1.57 MPa (14 – 16 kgf/cm^2)

(2) Moisture present in refrigeration system.

Condition : Periodically cools and then fails to cool

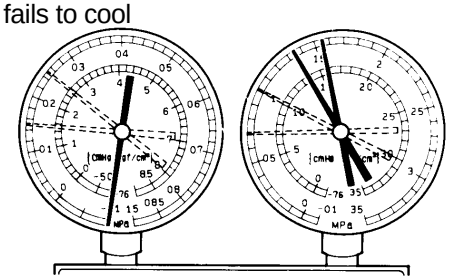
I22117

Symptom	Probable cause	Diagnosis	Remedy
During operation, pressure on low pressure side sometimes become a vacuum and sometime normal	Moisture in refrigerating system freezes at expansion valve orifice causing a temporary stop of cycle, however, when it melts, normal state is restored.	• Drier in oversaturected state • Moisture in refrigerating system freezes at expansion valve orifice and blocks circulation of refrigerant	(1) Replace condenser (2) Remove moisture in cycle by repeatedly evacuating air (3) Supply proper amount of new refrigerant

(3) Insufficient cooling

Condition: Cooling system does not function eftectively.

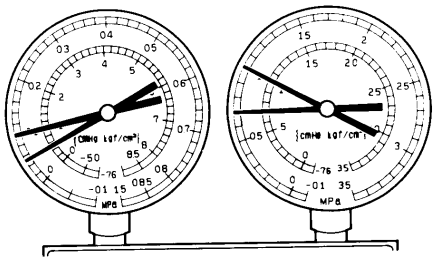

I22118

Symptom	Probable cause	Diagnosis	Corrective Actions
• Pressure low on both low and high pressure sides • Insufficient cooling performance	Gas leakage in refrigeration system	• Insufficient refrigerant • Refrigerant leaking	(1) Check for gas leakage and repair if necessary (2) Supply proper amount of new refrigerant (3) If indicated pressure value is close to a 0 when connected to gauge, create the vacuum after inspecting and repairing location of leak

(4) Poor circulation of refrigerant

Condition: Cooling system close not function effectively.

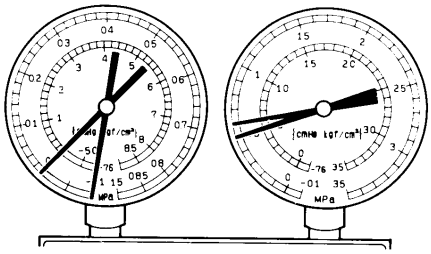

I22119

Symptom	Probable cause	Diagnosis	Corrective Action
• Pressure low on both low and high pressure sides • Frost on pipe from condenser to unit	Refrigerant flow obstructed by dirt in receiver	Receiver clogged	Replace condenser

(5) Refrigerant does not circulate

Condition: Cooling system does not function. (Sometimes it way function)

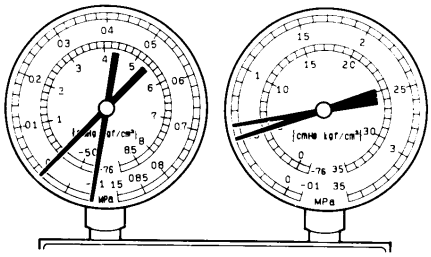

I22120

Symptom	Probable cause	Diagnosis	Corrective Actions
• Vacuum indicated on low pressure side, very low pressure indicated on high pressure side • Frost or dew seen on piping before and after receiver/ drier or expansion valve	• Refrigerant flow obstructed by moisture or dirt in refrigerating system • Refrigerant flow obstructed by gas leaked from expansion valve	Refrigerant does not circulate	(1) Check expansion valve (2) Clean out dirt in expansion valve by air blowing (3) Replace condenser (4) Evaporate air and supply proper amount of new refrigerant. (5) For gas leakage from expansion valve, replace expansion valve

(6) Refrigerant overcharged or insufficient cooling of condenser

Condition: Cooling system does not function dftectively.

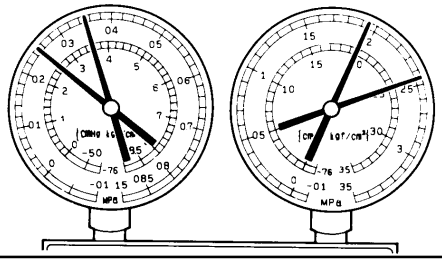

I22121

Symptom	Probable cause	Diagnosis	Remedy
• Pressure too high on both low and high pressure sides	• Unable to develop sufficient performance due to excessive use of refrigerating system • Insufficient cooling of condenser	• Excessive refrigerant in cycle→too much refrigerant supplied • Condenser cooling insufficient→condenser fins clogged at cooling fan	(1) Clean condenser (2) Check cooling fan with cooling fan motor operation (3) If (1) and (2) are in normal state, check amount of refrigerant and supply proper amount of refrigerant

(7) Air present in refrigeration system

Condition: Cooling system does not function.

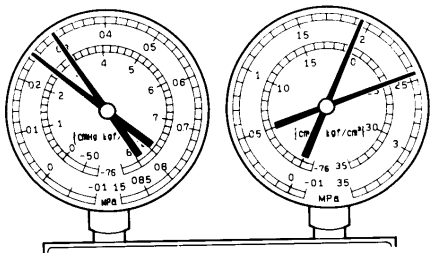

NOTE : These gauge indications are shown when the refrigerating system has been opens and the refrigerant charged without vacuum purging.

I22122

Symptom	Probable cause	Diagnosis	Corrective Actions
• Pressure too high on both low and high pressure sides • The low pressure piping too hot to the touch	Air entered in refrigerating system	• Air present in refrigerating system • Insufficient vacuum purging	(1) Check compressor oil to see if it is see if it is dirty or insufficient (2) Evacuate air and supply new refrigerant

(8) Expansion valve improperly

Condition: Refrigerant functions insufficient.

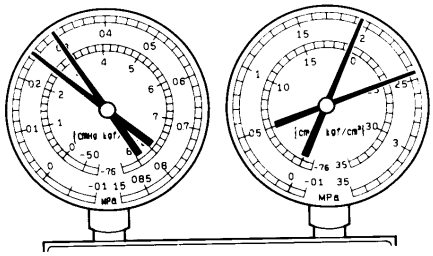

I22123

Symptom	Probable cause	Diagnosis	Corrective Actions
• Pressure too high on both low and high pressure sides • Frost or large amount of dew on piping on low pressure side	Trouble in expansion valve	• Excessive refrigerant in low pressure piping • Expansion valve opened too wide	Check expansion valve

(9) Defective compression compressor

Condition : Refrigerant is not effective.

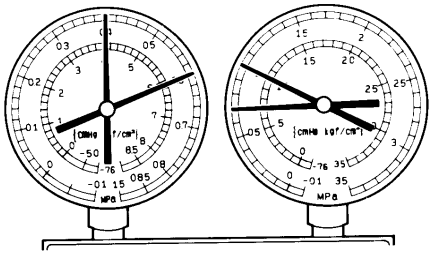

I22124

Symptom	Probable cause	Diagnosis	Corrective Actions
• Pressure too high on low high pressure sides • Pressure too low to on high pressure side	Internal leak in compressor	• Compression failure • Leakage from valve damaged or broken sliding parts	Repair or replace compressor

Gauge readings (Reference)

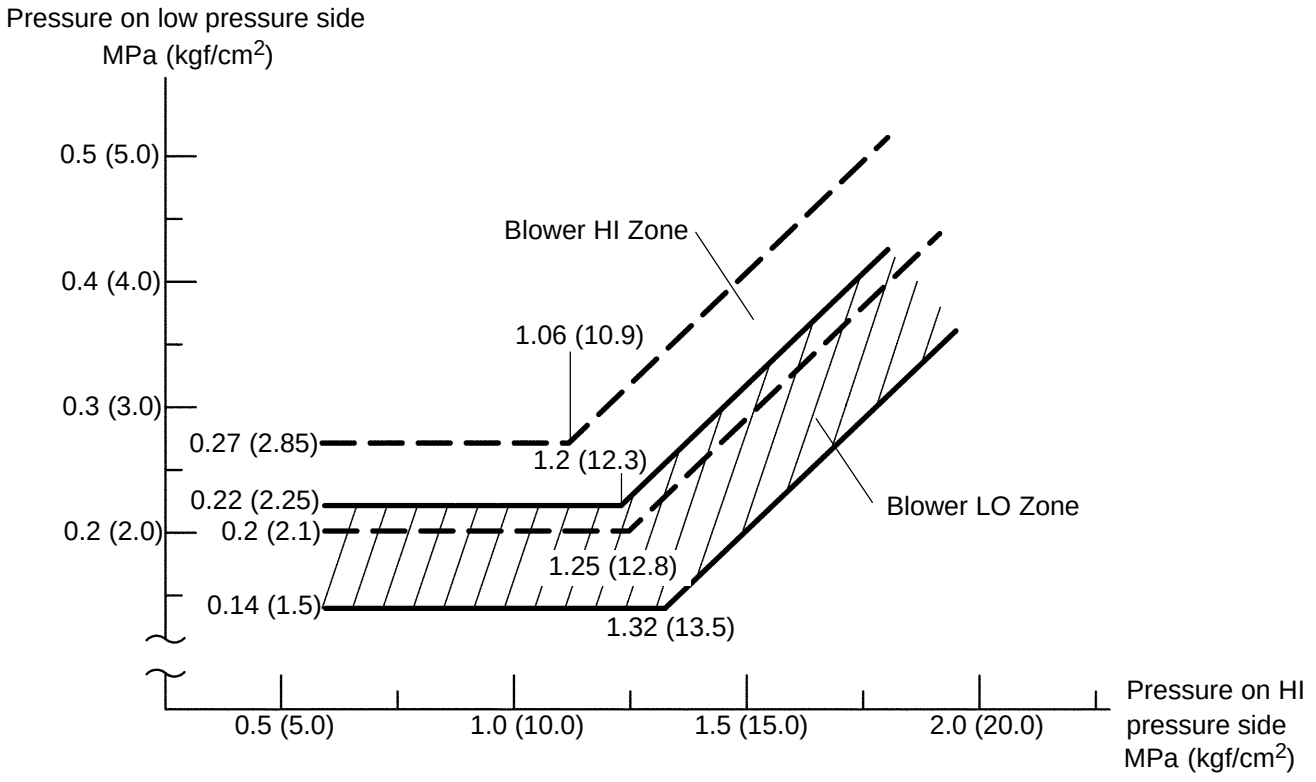

I30081

550J9–01

REPLACEMENT

1. DISCHARGE REFRIGERANT FROM REFRIGERATION SYSTEM

(a) Turn the A/C switch ON.

(b) Operating the cooler compressor at the engine rpm of approx. 1000 for 5 to 6 min., circulate the refrigerant and collect compressor oil remaining in each component into the cooler compressor as much as possible.

(c) Stop the engine.

(d) Let the refrigerant gas out.

SST 07110–58060 (07117–58080, 07117–58090, 07117–78050, 07117–88060, 07117–88070, 07117–88080)

2. CHARGE REFRIGERANT

(a) Using a vacuum pump, perform a vacuum purping.

(b) Supply refrigerant, HFC–134a (R134a).

Standard: 490 ± 30 g (17.28 ± 1.06 oz.)

SST 07110–58060 (07117–58060, 07117–58070, 07117–58080, 07117–58090, 07117–78050, 07117–88060, 07117–88070, 07117–88080), 07117–48130, 07117–48140

3. WARM UP ENGINE

4. INSPECT LEAKAGE OF REFRIGERANT

(a) Using a gas leak detector, check for leakage of refrigerant.

REFRIGERANT LINE

COMPONENTS

550JA–01

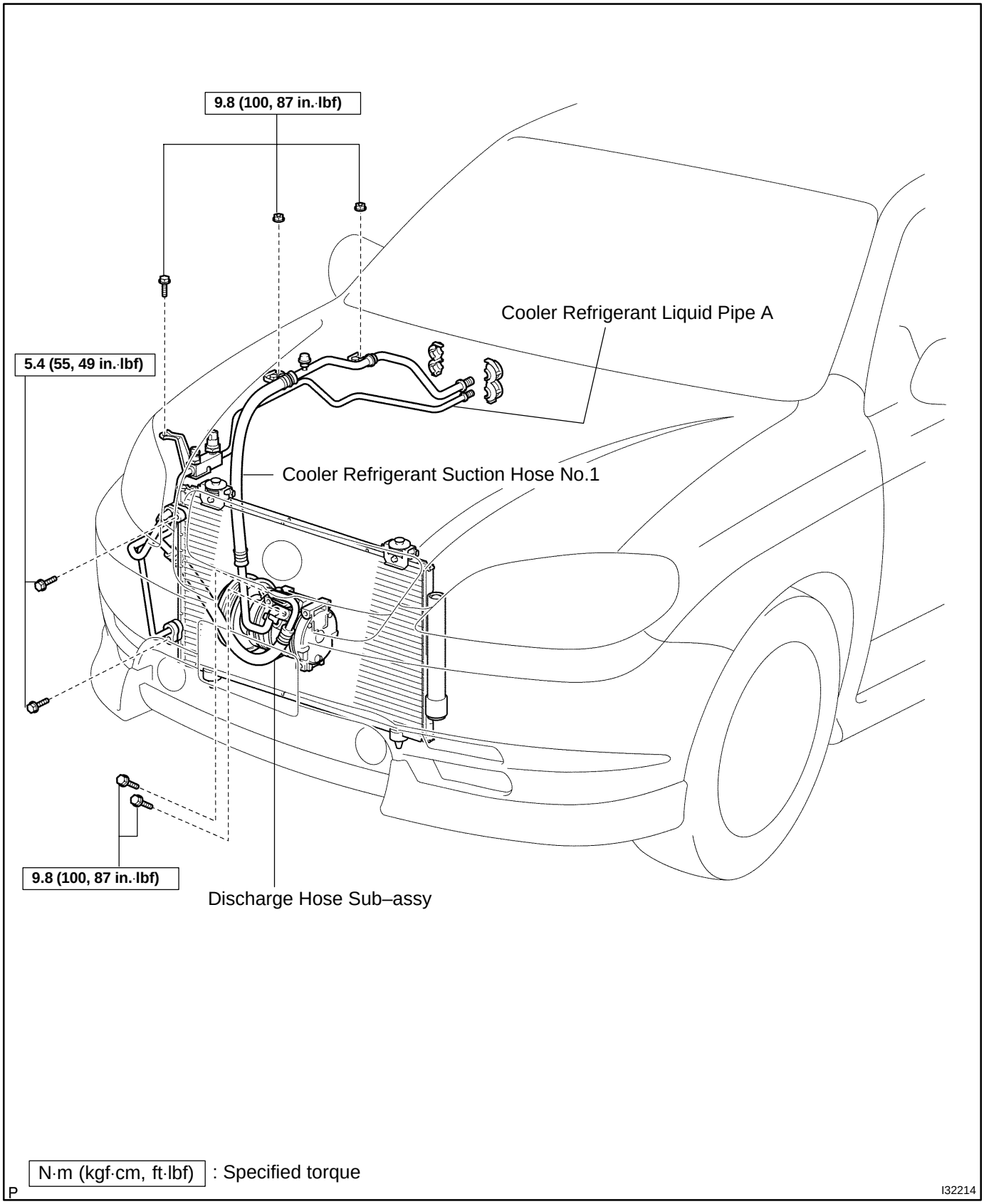

AIR CONDITIONING UNIT ASSY

COMPONENTS

550JC–01

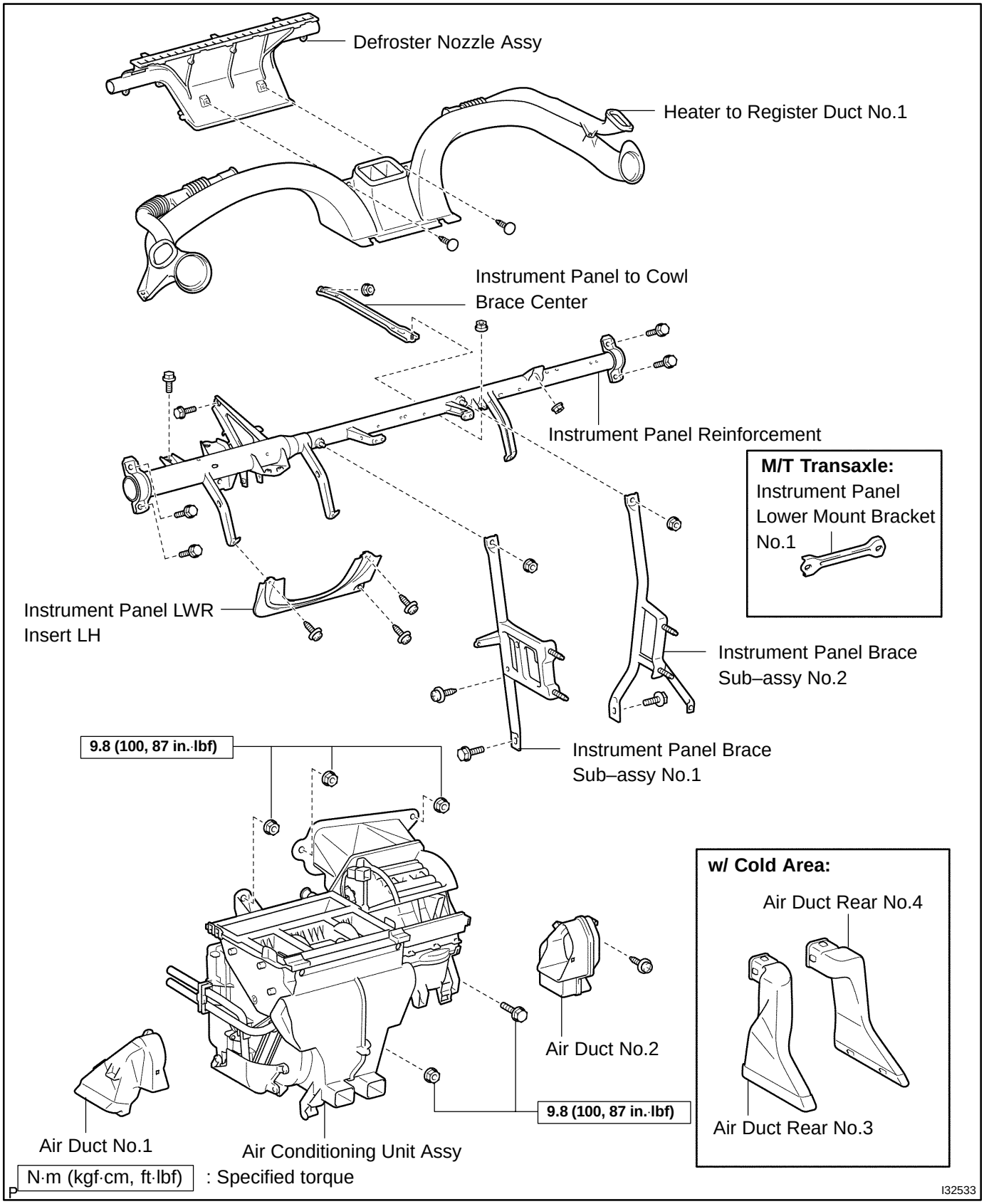

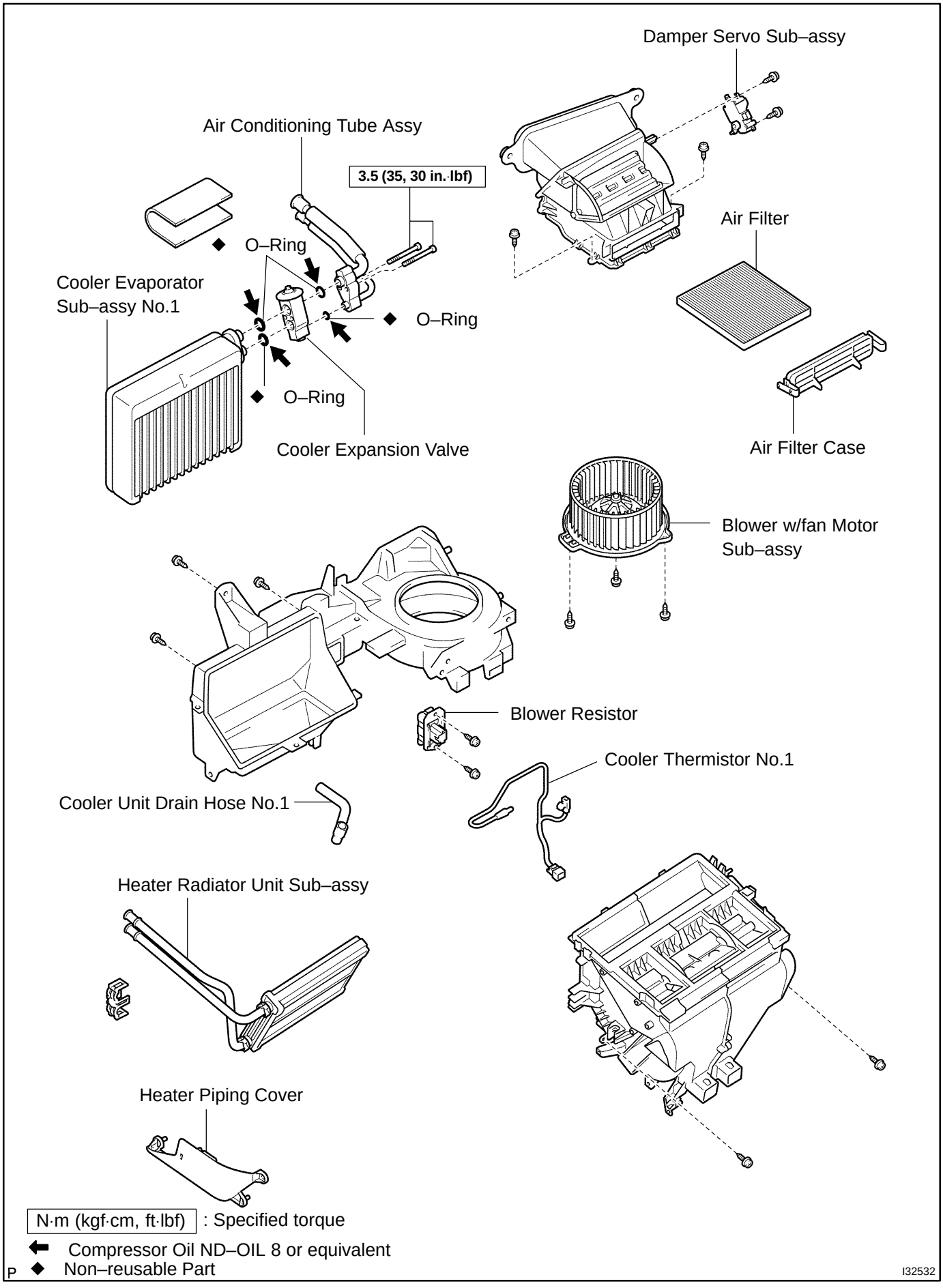
Damper Servo Sub–assy
Air Conditioning Tube Assy
3.5 (35, 30 in.·lbf)
O–Ring
Cooler Evaporator Sub–assy No.1
O–Ring
O–Ring
Cooler Expansion Valve
Air Filter
Air Filter Case
Blower w/fan Motor Sub–assy
Blower Resistor
Cooler Thermistor No.1
Cooler Unit Drain Hose No.1
Heater Radiator Unit Sub–assy
Heater Piping Cover
N·m (kgf·cm, ft·lbf) : Specified torque
Compressor Oil ND–OIL 8 or equivalent
P ◆ Non–reusable Part
I32532

550JD–01

OVERHAUL

HINT:

COMPONENT: See page 55–15

1. DISCHARGE REFRIGERANT FROM REFRIGERATION SYSTEM (See page 55–11)

SST 07110–58060 (07117–58080, 07117–58090, 07117–78050, 07117–88060, 07117–88070, 07117–88080)

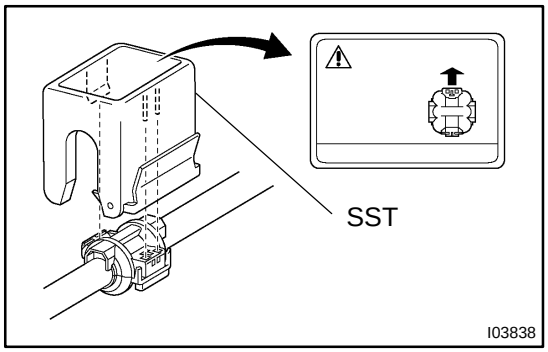

2. DISCONNECT COOLER REFRIGERANT SUCTION HOSE NO.1

(a) Install SST to piping clamp.

SST 09870–00015

HINT:

Confirm the direction of the piping clamp claw and SST using the illustration showing on the caution label.

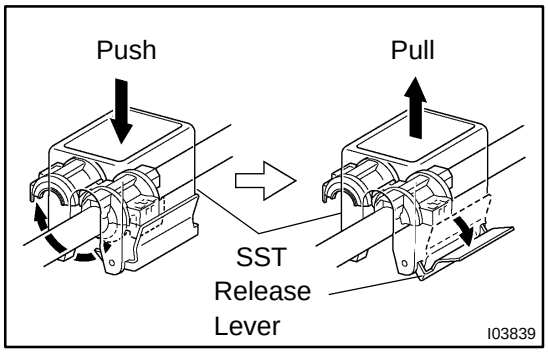

(b) Push down SST and release the clamp lock.

NOTICE:

Be careful not to deform the tube, when pushing SST.

(c) Pull SST slightly and push the release lever, then remove the piping clamp with SST.

(d) Remove the piping clamp from SST.

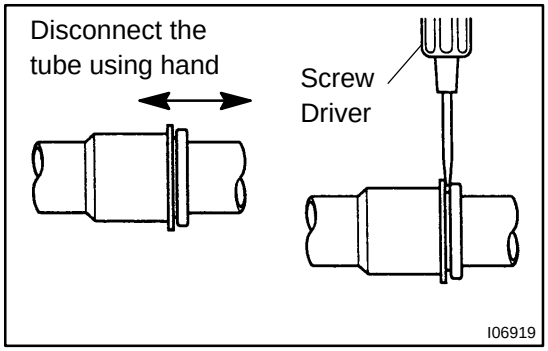

(e) Disconnect the cooler refrigerant suction hose No.1.

NOTICE:

- **Do not use tools like screwdriver to remove the tube.**
- **Cap the open fittings immediately to keep moisture or dirt out of the system.**

3. DISCONNECT COOLER REFRIGERANT LIQUID PIPE A

SST 09870–00015

HINT:

Disconnect in the same way as the cooler refrigerant suction hose No.1.

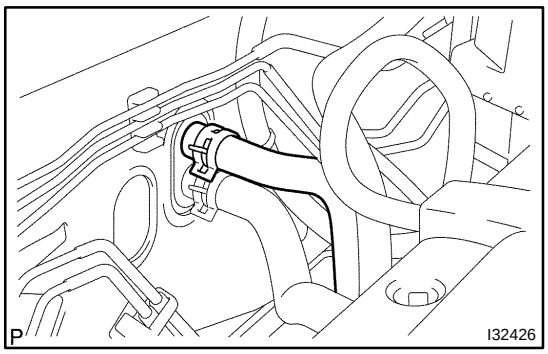

4. DISCONNECT HEATER INLET WATER HOSE

(a) Using pliers, grip the claws of clip and slide the clip and disconnect the heater inlet water hose.

5. DISCONNECT HEATER OUTLET WATER HOSE

HINT:

Disconnect in the same way as the heater inlet water hose.

6. REMOVE INSTRUMENT PANEL SUB–ASSY LOWER (See page 71–10)

HINT:

Refer to the instructions for removal of the instrument panel sub–assy lower.

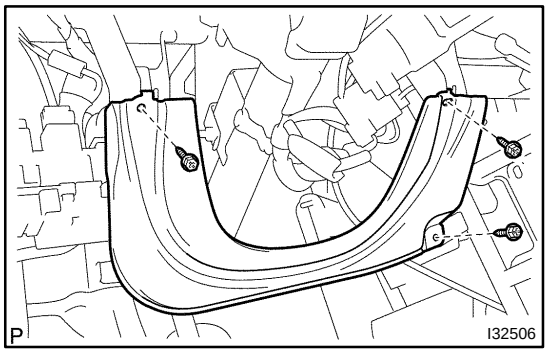

7. REMOVE INSTRUMENT PANEL LWR PAD INSERT LH

(a) Remove the 3 screws and instrument panel LWR pad insert LH.

8. REMOVE INSTRUMENT PANEL LOWER MOUNT BRACKET NO.1 (M/T TRANSAXLE)

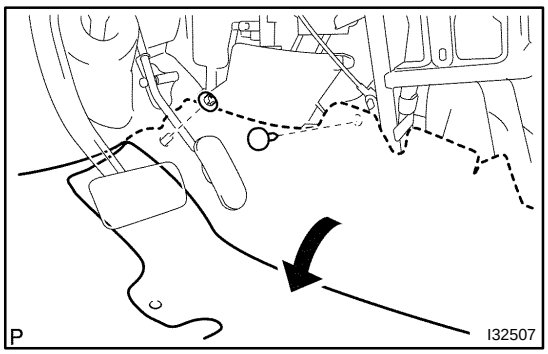

9. REMOVE INSTRUMENT PANEL BRACE SUB–ASSY NO.1

(a) Remove 2 clips and take up the floor carpet.

HINT:

Take up the floor carpet as small as the instrument panel brace sub–assy No.1 can be removed.

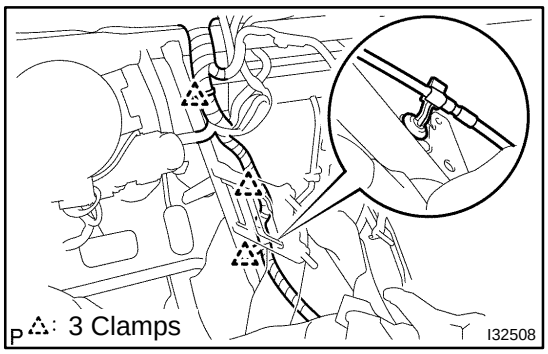

(b) Remove the 3 clamps and floor shift parking lock cable assy.

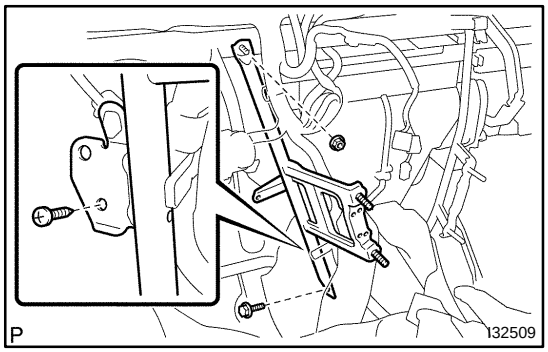

(c) Remove the screw.
(d) Remove the bolt, nut and instrument panel brace sub–assy No.1.

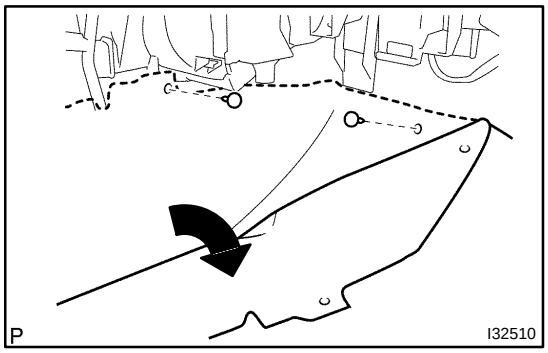

10. REMOVE INSTRUMENT PANEL BRACE SUB–ASSY NO.2

(a) Remove 2 clips and take up the floor carpet.

HINT:

Take up the floor carpet as small as the instrument panel brace sub–assy No.2 can be removed.

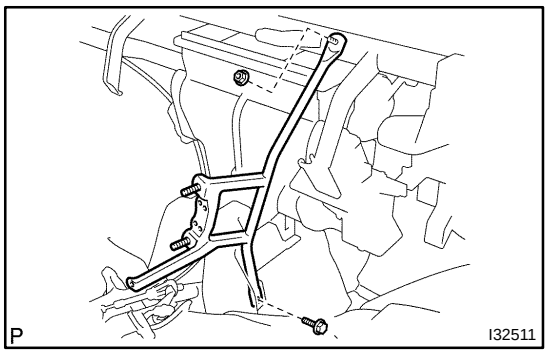

(b) Remove the bolt, nut and instrument panel brace sub–assy No.2.

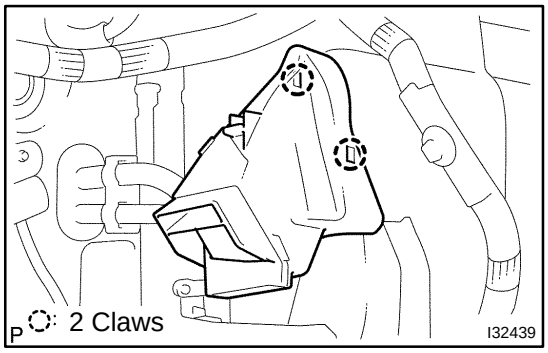

11. REMOVE AIR DUCT NO.1

(a) Release the 2 fitting claws, remove the air duct No.1.

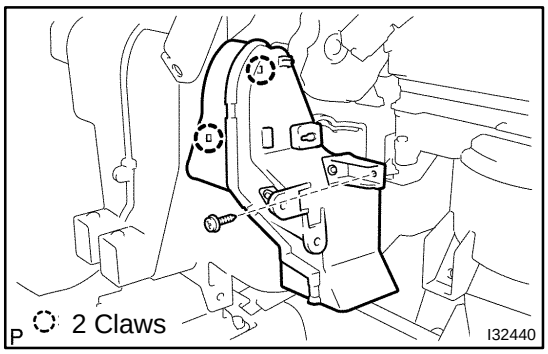

12. REMOVE AIR DUCT NO.2

(a) Remove the screw.

(b) Release the 2 fitting claws, remove the air duct No.2.

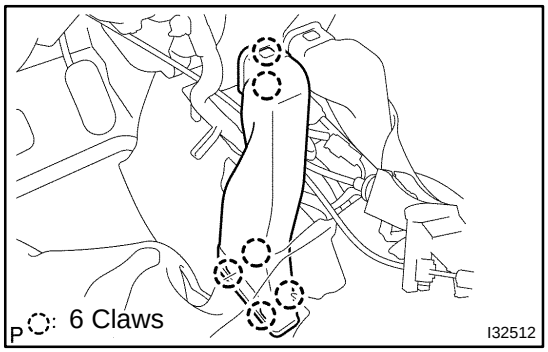

13. REMOVE AIR DUCT REAR NO.3 (W/ COLD AREA)

(a) Release the 6 fitting claws, remove the air duct rear No.3.

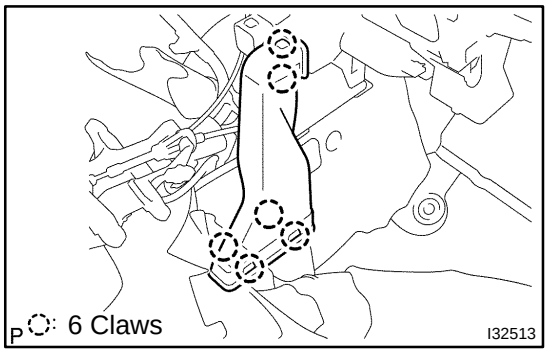

14. REMOVE AIR DUCT REAR NO.4 (W/ COLD AREA)

(a) Release the 6 fitting claws, remove the air duct rear No.4.

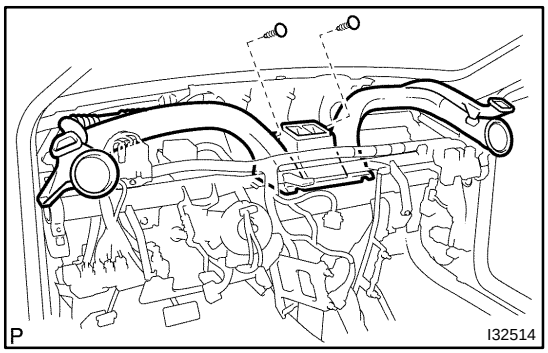

15. REMOVE HEATER TO REGISTER DUCT NO.1

(a) Remove the 2 clips and heater to register duct No.1.

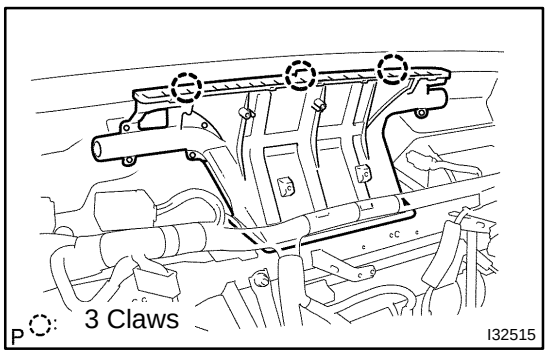

16. REMOVE DEFROSTER NOZZLE ASSY

(a) Release the 3 fitting claws, remove the defroster nozzle assy.

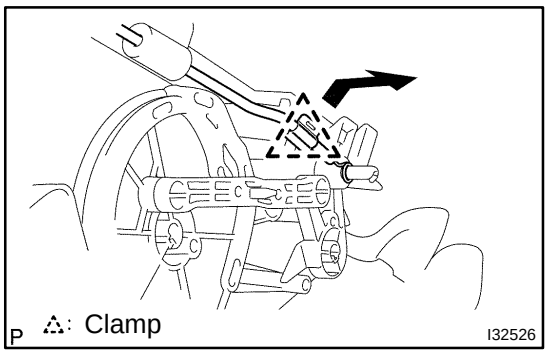

17. DISCONNECT DEFROSTER DAMPER CONTROL CABLE SUB–ASSY

(a) Disconnect the outer cable from the clamp.

(b) Disconnect the inner cable and defroster damper control cable sub–assy.

NOTICE:

- **Be careful not to bend the cable wire.**
- **If the cable wire bends, the air conditioning control assy operationality becomes worse.**

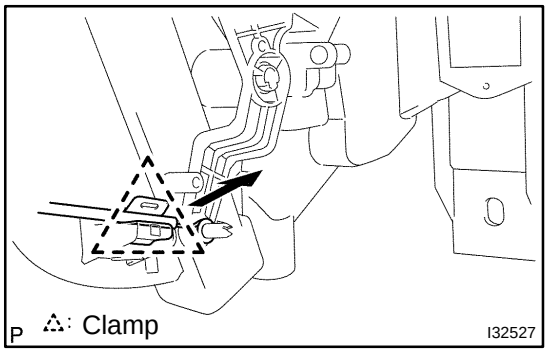

18. DISCONNECT AIRMIX DAMPER CONTROL CABLE SUB–ASSY

(a) Disconnect the outer cable from the clamp.

(b) Disconnect the inner cable and airmix damper control cable sub–assy.

NOTICE:

- **Be careful not to bend the cable wire.**
- **If the cable wire bends, the air conditioning control assy operationality becomes worse.**

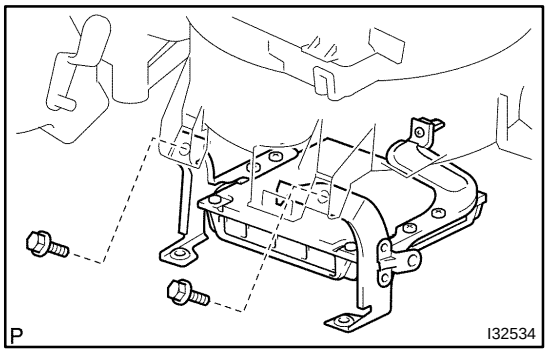

19. DISCONNECT ECM

(a) Remove the 2 bolts and disconnect the ECM.

NOTICE:

- **Do not apply excessive force to the connecter of the ECM.**
- **Do not give any impact to the ECM.**

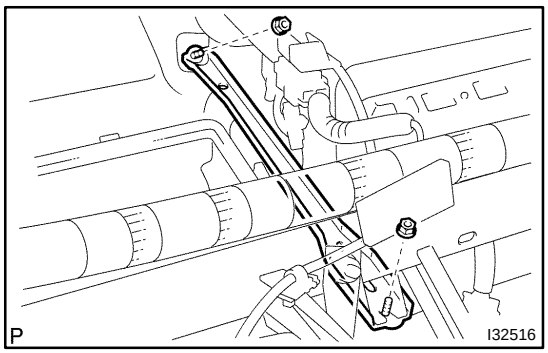

20. REMOVE INSTRUMENT PANEL TO COWL BRACE CENTER

(a) Remove the 2 nuts and instrument panel to cowl brace center.

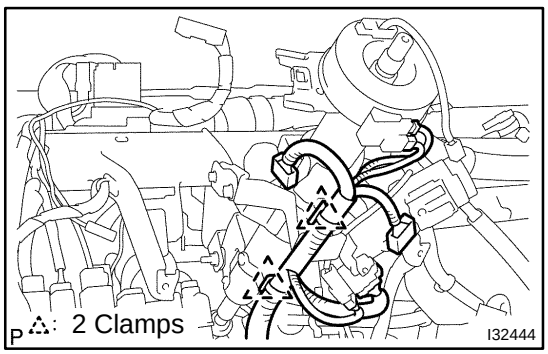

21. DISCONNECT STEERING COLUMN ASSY

(a) Disconnect the connector, remove the 2 clamps.

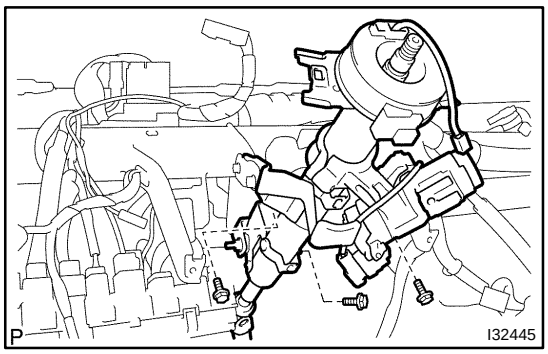

(b) Remove the 3 bolts, disconnect the steering column assy.

22. REMOVE INSTRUMENT PANEL REINFORCEMENT

(a) Remove the 8 screws and 2 earth wires from the instrument panel reinforcement.

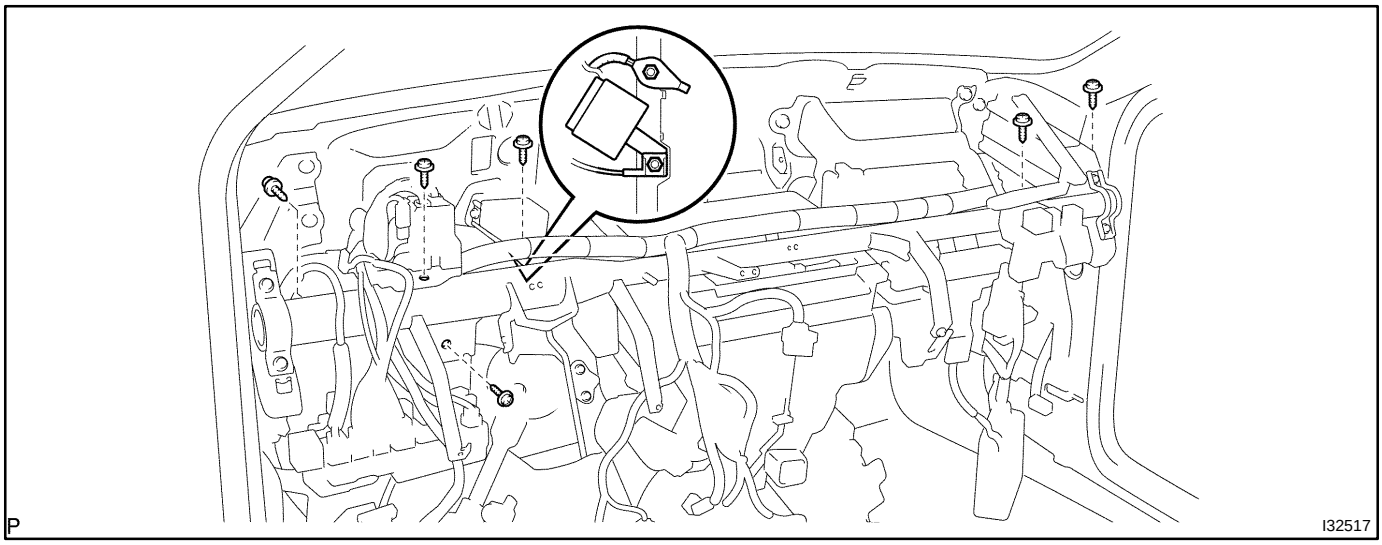

(b) Disconnect the 5 clamps and wire harness.

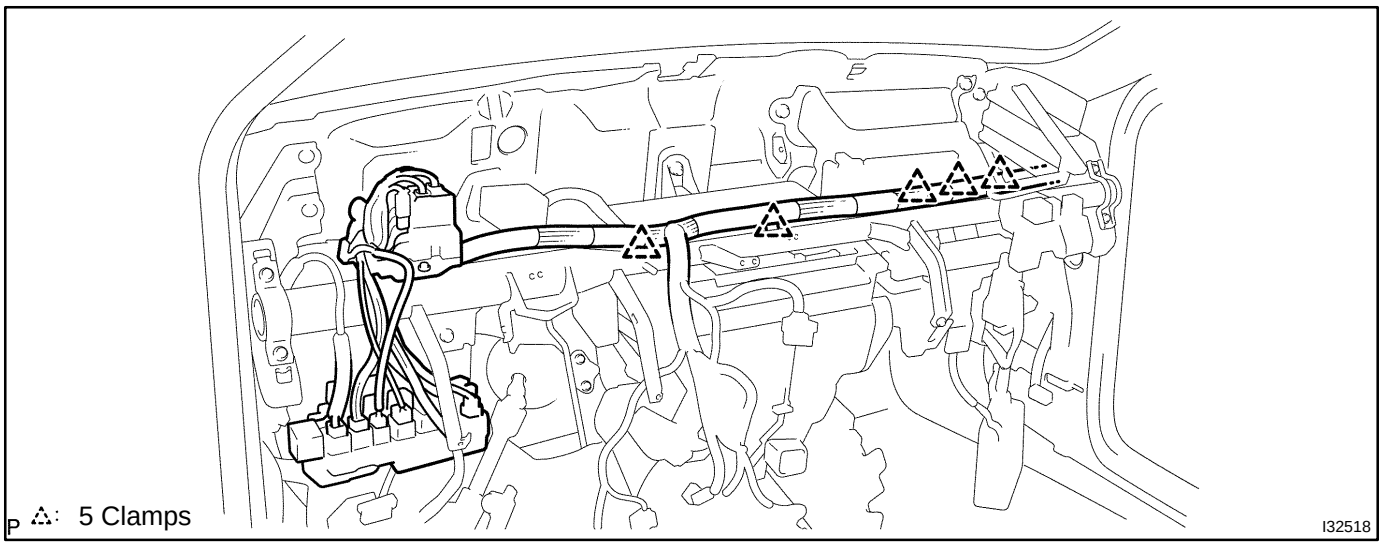

(c) Remove the 6 bolts and instrument panel reinforcement.

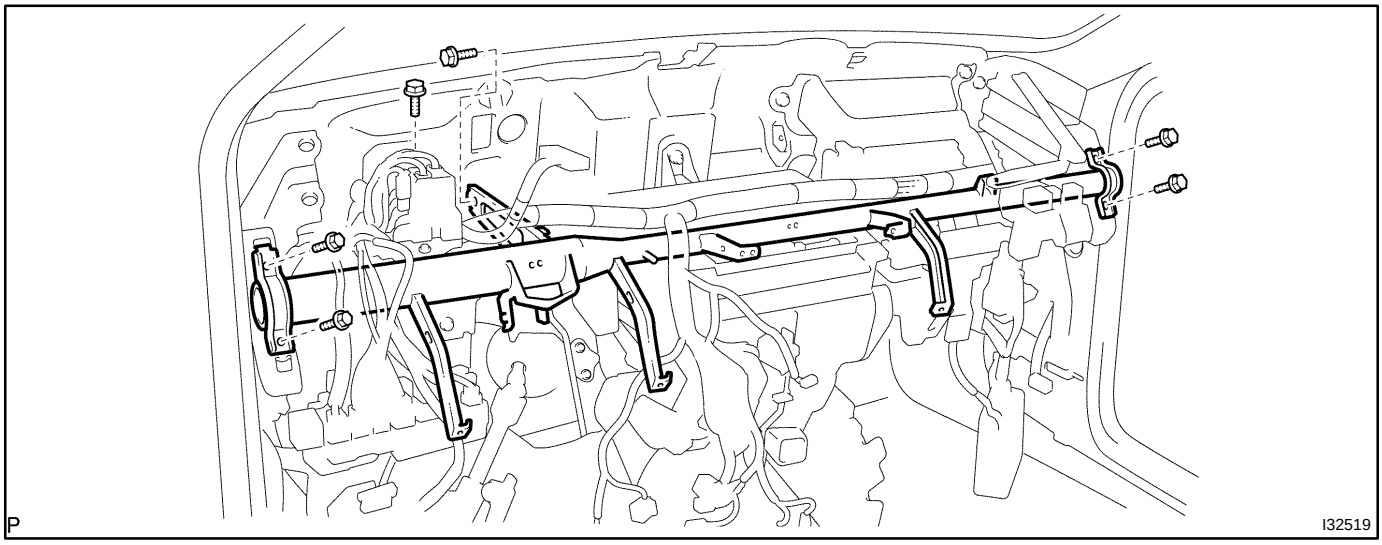

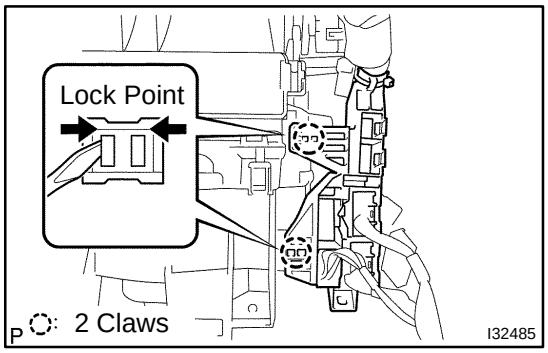

23. REMOVE AIR CONDITIONING UNIT ASSY

(a) Release the 2 fitting claws, disconnect the connector holder.

HINT:

Release the claw while pressing the lock part in the arrow direction.

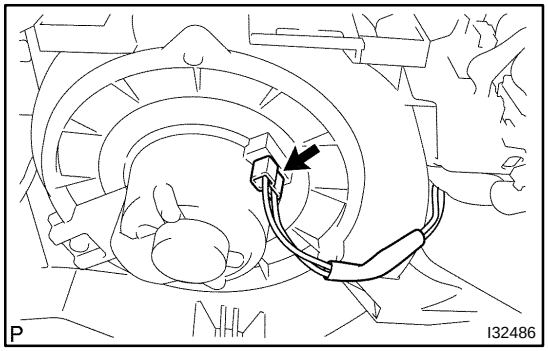

(b) Disconnect the connector from the blower w/fan motor sub–assy.

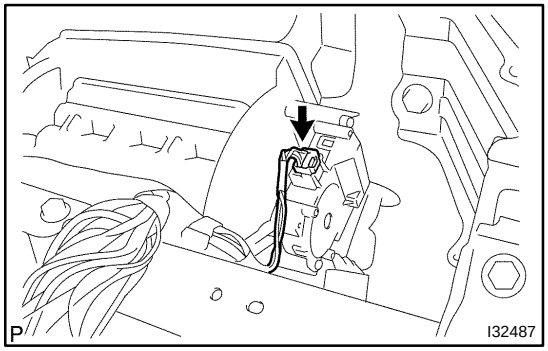

(c) Disconnect the connector from the damper servo sub–assy.

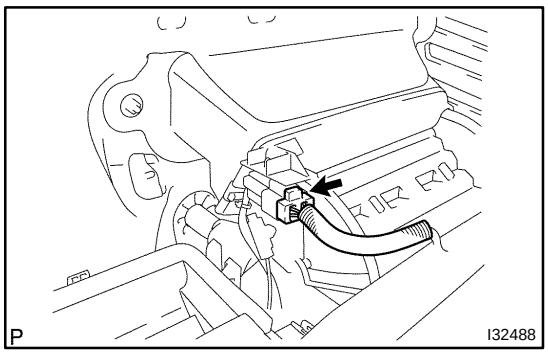

(d) Disconnect the connector from the cooler thermistor No.1.

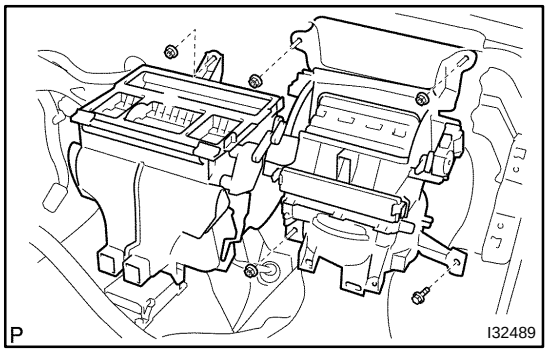

(e) Remove the 4 nuts, bolt and air conditioning unit assy.

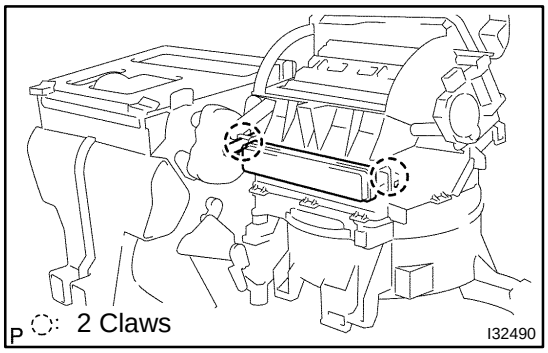

24. REMOVE AIR FILTER CASE

(a) Release the 2 fitting claws, remove the air filter case.

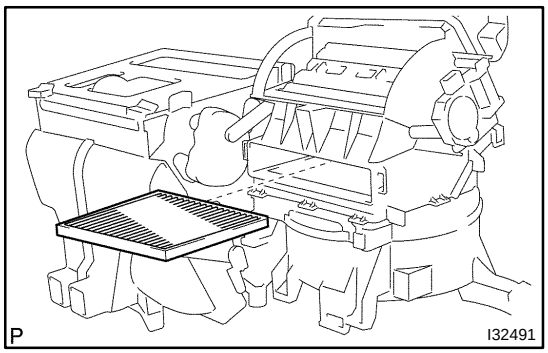

25. REMOVE AIR FILTER

(a) Remove the air filter from the air conditioning unit assy.

HINT:

Removing only the glove compartment door assy makes it possible and install the air filter.

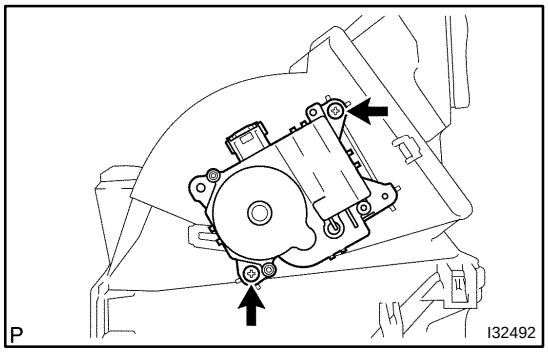

26. REMOVE DAMPER SERVO SUB–ASSY

(a) Remove the 2 screws and damper servo sub–assy.

HINT:

Removing only instrument panel sub–assy upper and heater to register duct No. 1 makes it possible and install the damper servo sub–assy.

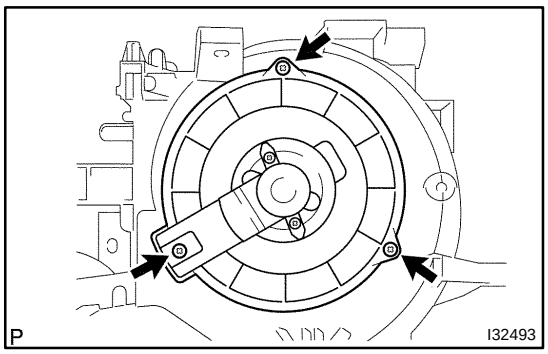

27. REMOVE BLOWER W/FAN MOTOR SUB–ASSY

(a) Remove the 3 screws and blower w/fan motor sub–assy.

HINT:

Removing only the ECM makes it possible and install the blower w/fan motor sub–assy.

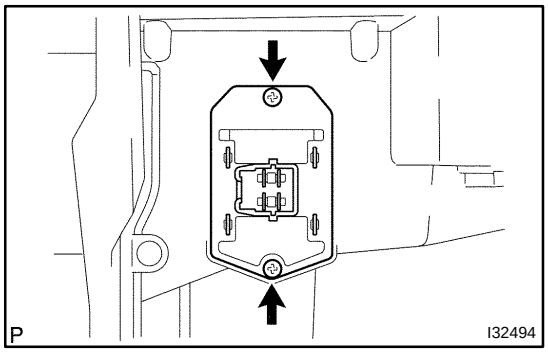

28. REMOVE BLOWER RESISTOR

(a) Disconnect the connector.

(b) Remove the 2 screws and blower resistor.

HINT:

Removing only the ECM makes it possible and install the blower resistor.

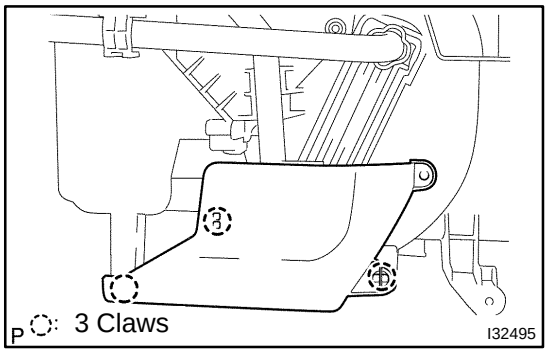

29. REMOVE HEATER PIPING COVER

(a) Release the 3 fitting claws, remove the heater piping cover.

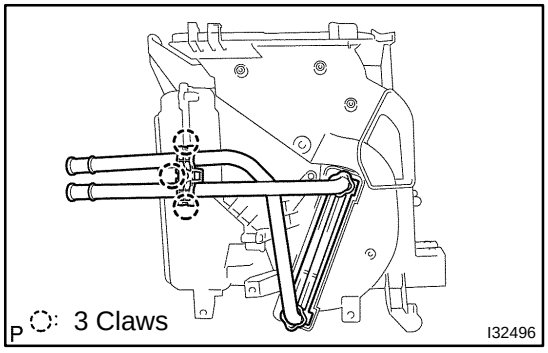

30. REMOVE HEATER RADIATOR UNIT SUB–ASSY

(a) Release the 3 fitting claws, remove the heater piping clamp and heater radiator unit sub–assy

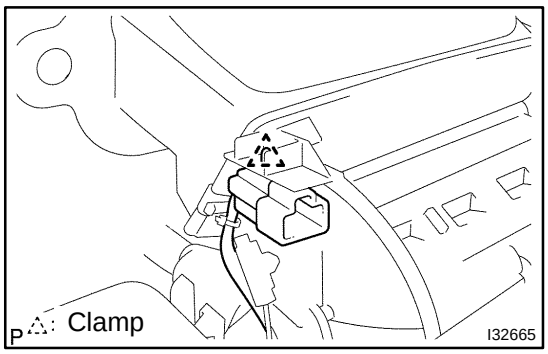

31. REMOVE COOLER THERMISTOR NO.1

(a) Remove the clamp.

(b) Release the fitting claw, remove the 2 screws and heater case.

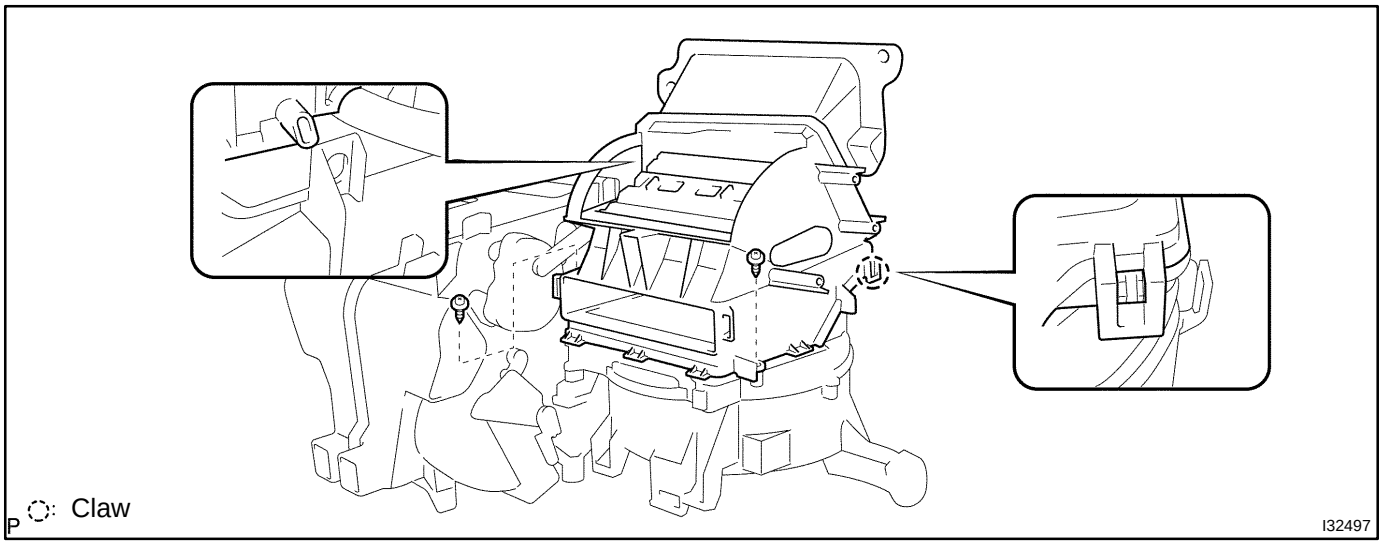

(c) Release the fitting claw, remove the 5 screws and heater case.

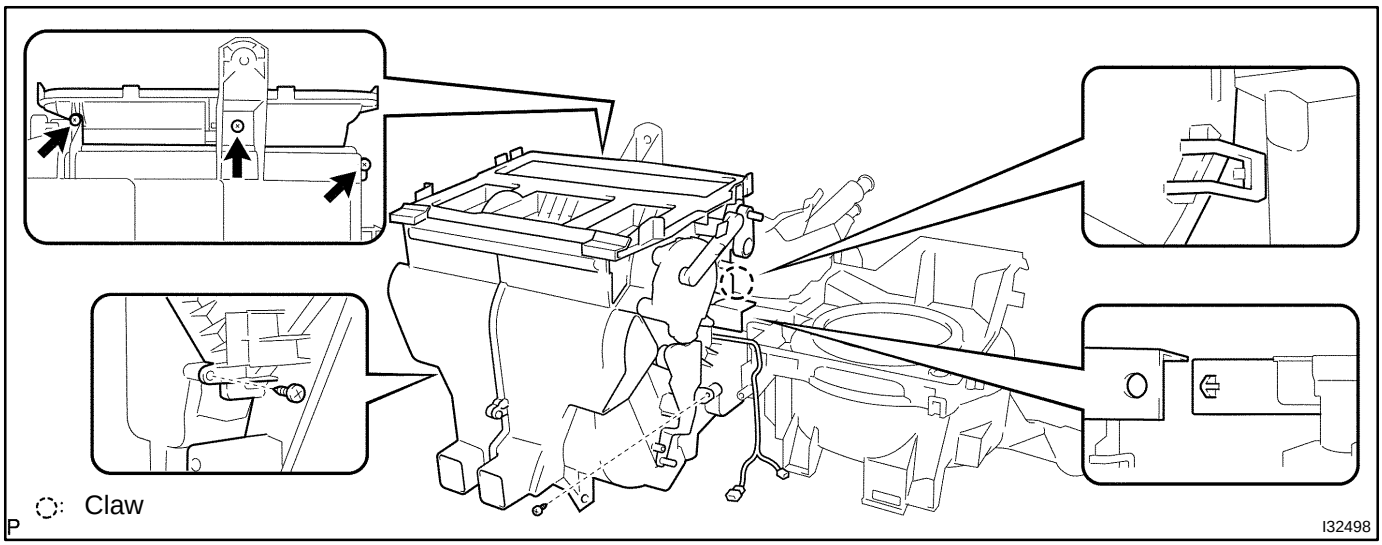

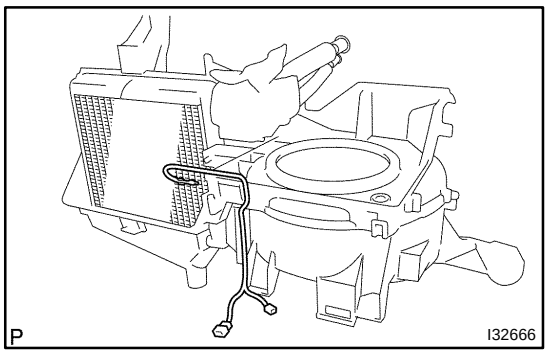

(d) Remove the cooler thermistor No.1 from the cooler evaporator sub–assy No.1.

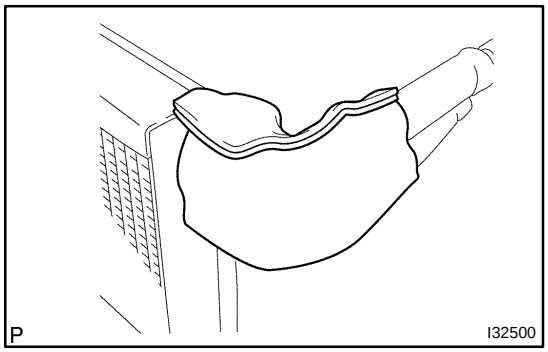

32. REMOVE AIR CONDITIONING TUBE ASSY

(a) Remove the cooler evaporator assy from the heater case.
(b) Remove the packing.

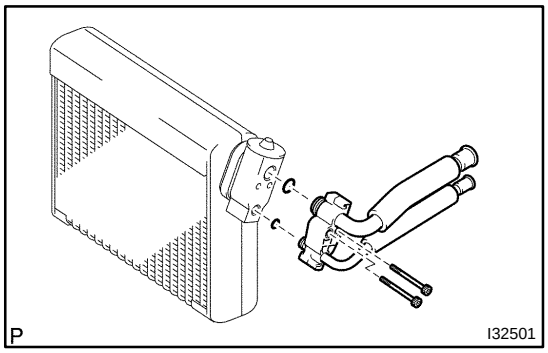

(c) Using a hexagon wrench 5.0 mm (0.20 in.), remove the 2 hexagon bolts and air conditioning tube assy.
(d) Remove the 2 O–rings from the air conditioning tube assy.

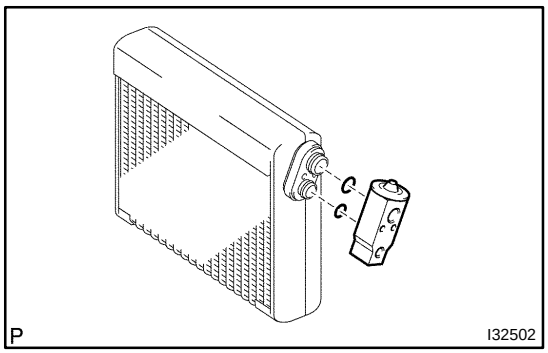

33. REMOVE COOLER EXPANSION VALVE

(a) Remove the cooler expansion valve from the cooler evaporator sub–assy No.1.
(b) Remove the 2 O–rings from the cooler evaporator sub–assy No.1.

HINT:
Removing only instrument panel sub–assy upper, heater to register duct No.1 and heater case makes it possible and install the cooler expansion valve.

34. REMOVE COOLER EVAPORATOR SUB–ASSY NO.1

35. REMOVE COOLER UNIT DRAIN HOSE NO.1

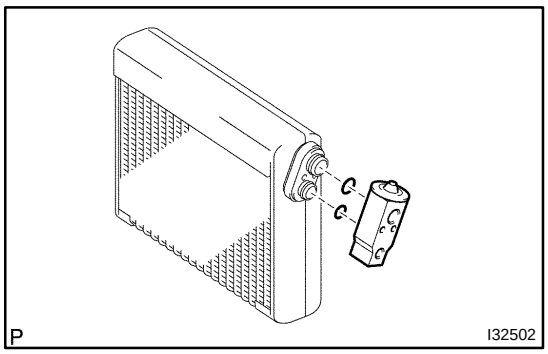

36. INSTALL COOLER EXPANSION VALVE

(a) Lubricate 2 new O–rings with compressor oil and install them to the cooler expansion valve.
Compressor oil: ND–OIL 8 or equivalent

(b) Install the cooler expansion valve from cooler evaporator sub–assy No.1.

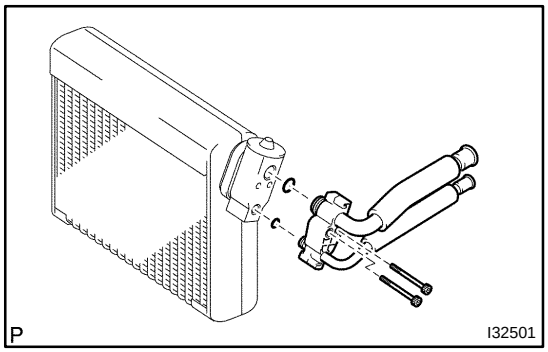

37. INSTALL AIR CONDITIONING TUBE ASSY

(a) Lubricate 2 new O–rings with compressor oil and install them to the air conditioning tube assy.
Compressor oil: ND–OIL 8 or equivalent

(b) Using a hexagon wrench 5.0 mm (0.20 in.), install the air conditioning tube assy with the 2 hexagon bolts.
Torque: 3.5 N·m (35 kgf·cm, 30 in.·lbf)

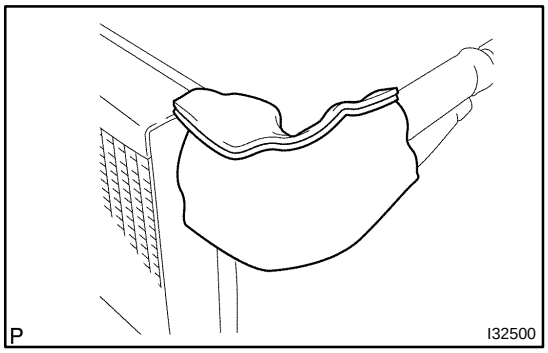

(c) Install the packing.

HINT:

Securely attach so that the gap in the packing will not be mode.

(d) Install the cooler evaporator assy to the heater case.

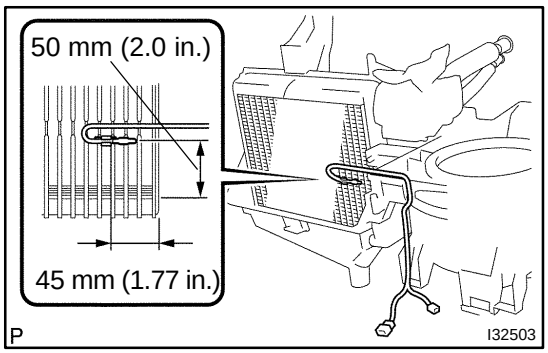

38. INSTALL COOLER THERMISTOR NO.1

(a) Install the cooler thermistor No.1 at the shown position on the illustration.

(b) Install the heater case with the claw and 5 screws.

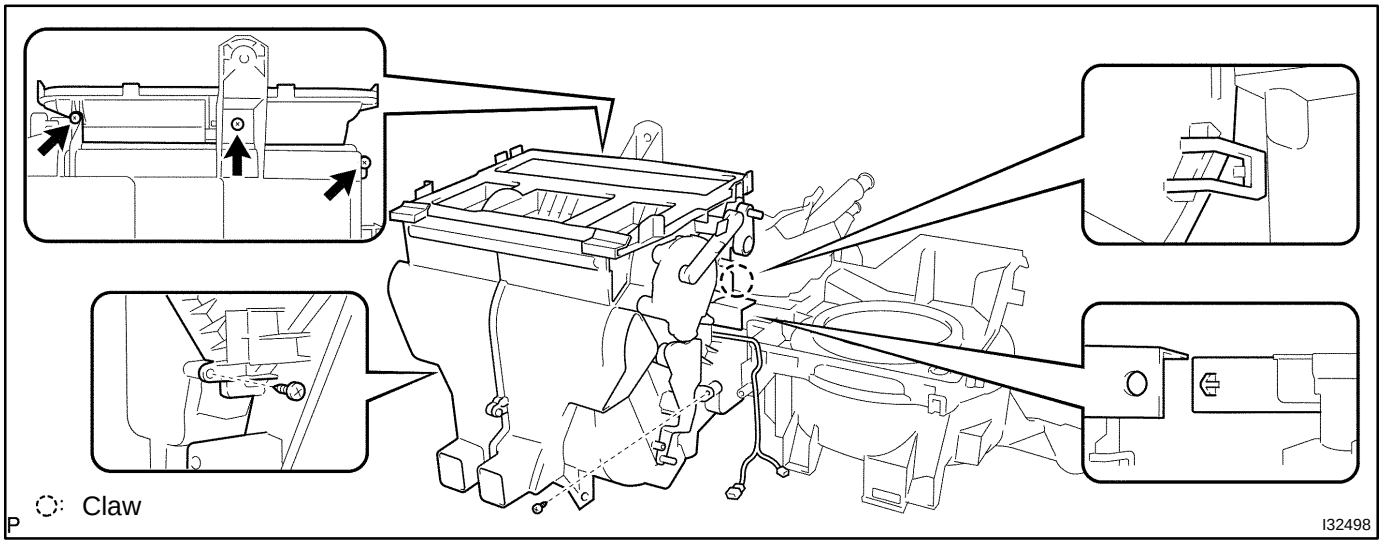

(c) Install the heater case with the claw and 2 screws.

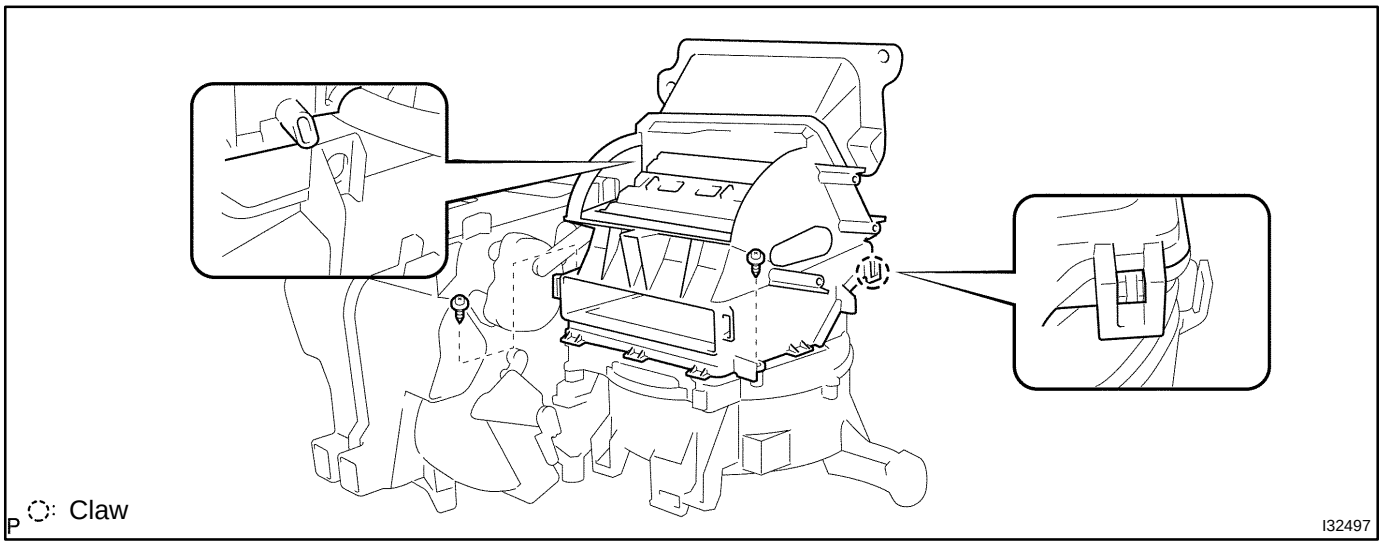

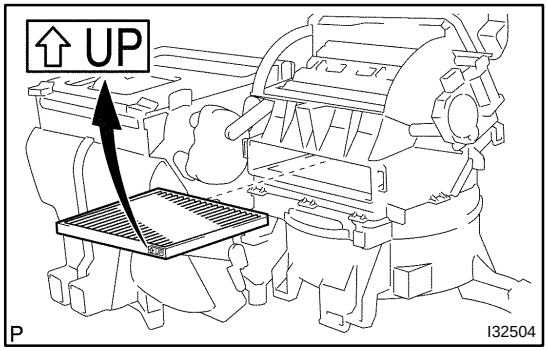

39. INSTALL AIR FILTER

(a) Install the air filter to the air conditioning unit assy.

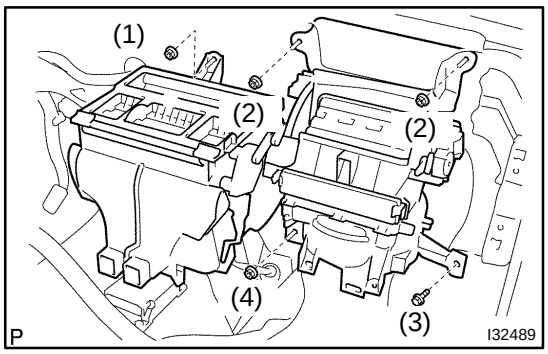

40. INSTALL AIR CONDITIONING UNIT ASSY

(a) Install the air conditioning unit assy with the 4 nuts and bolt.

Torque: 9.8 N·m (100 kgf·cm, 87 in.·lbf)

NOTICE:

Tighten the nuts and bolt in following order shown in the illustration to install the air conditioner unit assy.

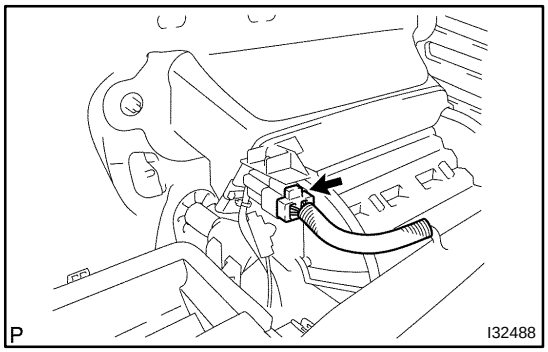

(b) Connect the connector to the cooler thermistor No.1.

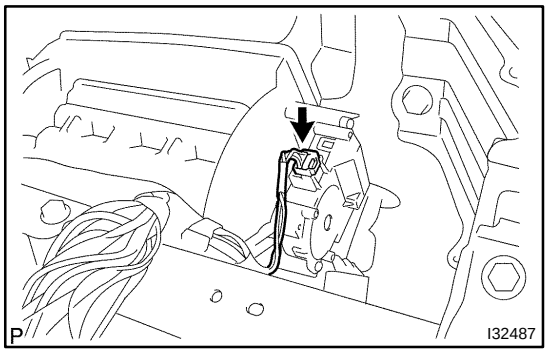

(c) Connect the connector to the damper servo sub–assy.

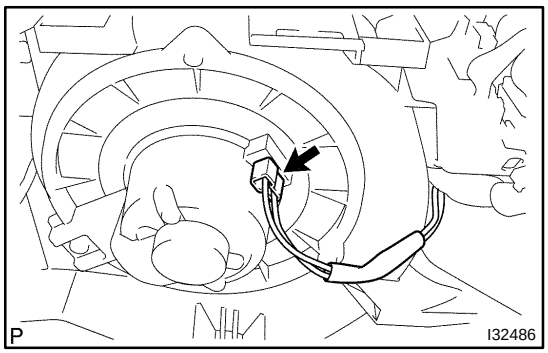

(d) Connect the connector to the blower w/fan motor sub–assy.

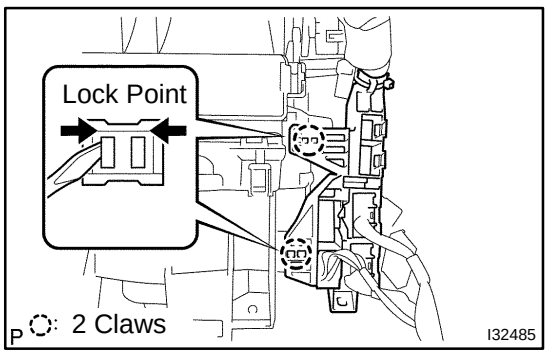

(e) Install the 2 fitting claws, connect the connector holder.

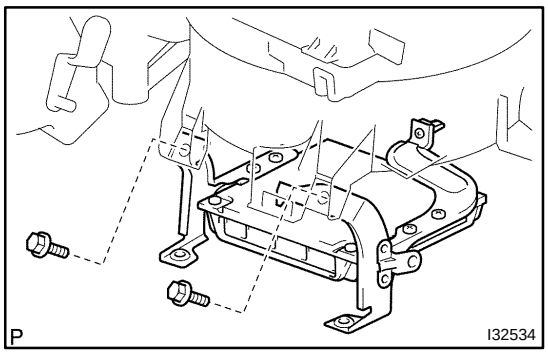

41. INSTALL ECM

(a) Install the ECM with the 2 bolts.
Torque: 3.0 N·m (30 kgf·cm, 26 in.·lbf)

NOTICE:

- **Do not apply excessive force to the connecter of the ECM.**
- **Do not give any impact to the ECM.**

42. INSTALL INSTRUMENT PANEL SUB–ASSY LOWER (See page 71–10)

43. INSTALL AIR CONDITIONING CONTROL ASSY (See page 55–13)

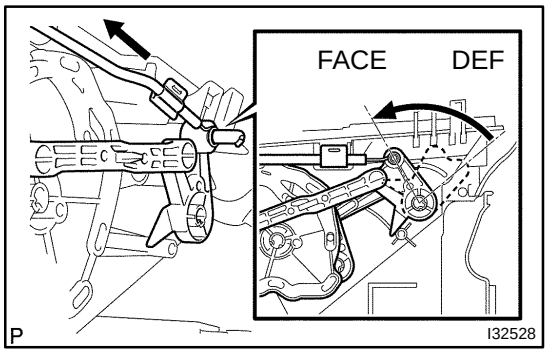

44. INSTALL DEFROSTER DAMPER CONTROL CABLE SUB–ASSY

(a) Set the arm in FACE position.

(b) Install the inner cable end to the control lever with the arm in FACE position.

(c) Install the outer cable to the cable clamp while slightly pressing it in the direction of the arrow.

NOTICE:

- **Be careful not to bend the cable wire.**
- **If the cable wire bends, the air conditioning control assy operationality becomes worse.**

HINT:

Operating the mode control lever, check that it properly stops at both ends of FACE and DEF and no recoil is identified.

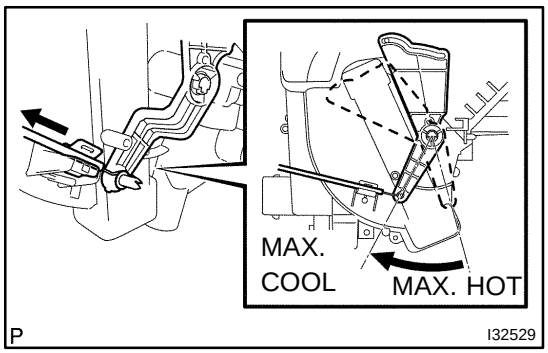

45. INSTALL AIRMIX DAMPER CONTROL CABLE SUB–ASSY

(a) Set the arm in MAX. COOL position.

(b) Install the inner cable end to the control lever with the arm in MAX. COOL position.

(c) Install the outer cable to the cable clamp while slightly pressing it in the direction of the arrow.

NOTICE:

- **Be careful not to bend the cable wire.**
- **If the cable wire bends, the air conditioning control assy operationality becomes worse.**

HINT:

Operating the temperature control lever, check that it properly stops at both ends of MAX. COOL and MAX. HOT and no recoil is identified.

46. REMOVE AIR CONDITIONING CONTROL ASSY (See page 55–13)

47. INSTALL INSTRUMENT PANEL SUB–ASSY UPPER (See page 71–10)

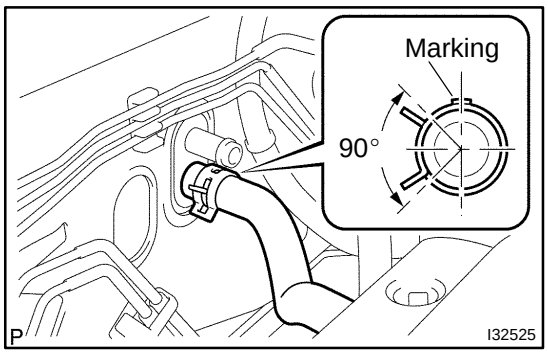

48. INSTALL HEATER OUTLET WATER HOSE

(a) Using pliers, grip the claws of clip and slide the clip and connect the heater outlet water hose.

NOTICE:

- **The clip is installing so that the projection of the clip may go into the 90° to a direction position.**
- **Marking of hose is installed upward by vehicle.**

49. INSTALL HEATER INLET WATER HOSE

HINT:

Connect in the same way as the heater outlet water hose.

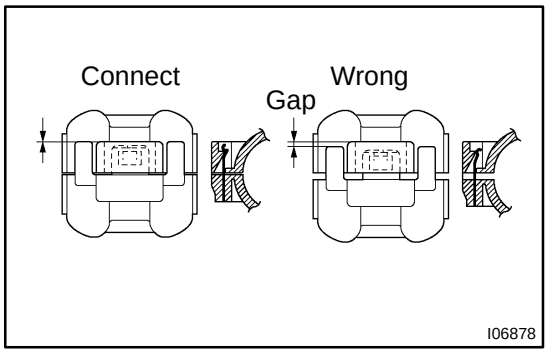

50. INSTALL COOLER REFRIGERANT SUCTION HOSE NO.1

(a) Lubricate a new O–ring with compressor oil and install them to the hose.

Compressor oil: ND–OIL 8 or equivalent

(b) Install the cooler refrigerant suction hose No.1 and piping clamp.

HINT:

After connection, check the fitting for claw of the piping clamp.

51. INSTALL COOLER REFRIGERANT LIQUID PIPE A

(a) Lubricate a new O–ring with compressor oil and install them to the pipe.

Compressor oil: ND–OIL 8 or equivalent

(b) Install the cooler refrigerant liquid pipe A and piping clamp.

HINT:

After connection, check the fitting for claw of the piping clamp.

52. ADD COOLANT (See page 16–6)

53. CHECK ENGINE COOLANT LEAK (See page 16–1)

54. CHARGE REFRIGERANT (See page 55–11)

SST 07110–58060 (07117–58060, 07117–58070, 07117–58080, 07117–58090, 07117–78050, 07117–88060, 07117–88070, 07117–88080), 07117–48130, 07117–48140

Specified amount: 490 ± 30 g (17.28 ± 1.06 oz.)

55. WARM UP ENGINE

56. INSPECT LEAKAGE OF REFRIGERANT (See page 55–11)

COOLER COMPRESSOR ASSY (1ZZ–FE)

COMPONENTS

550JG–01

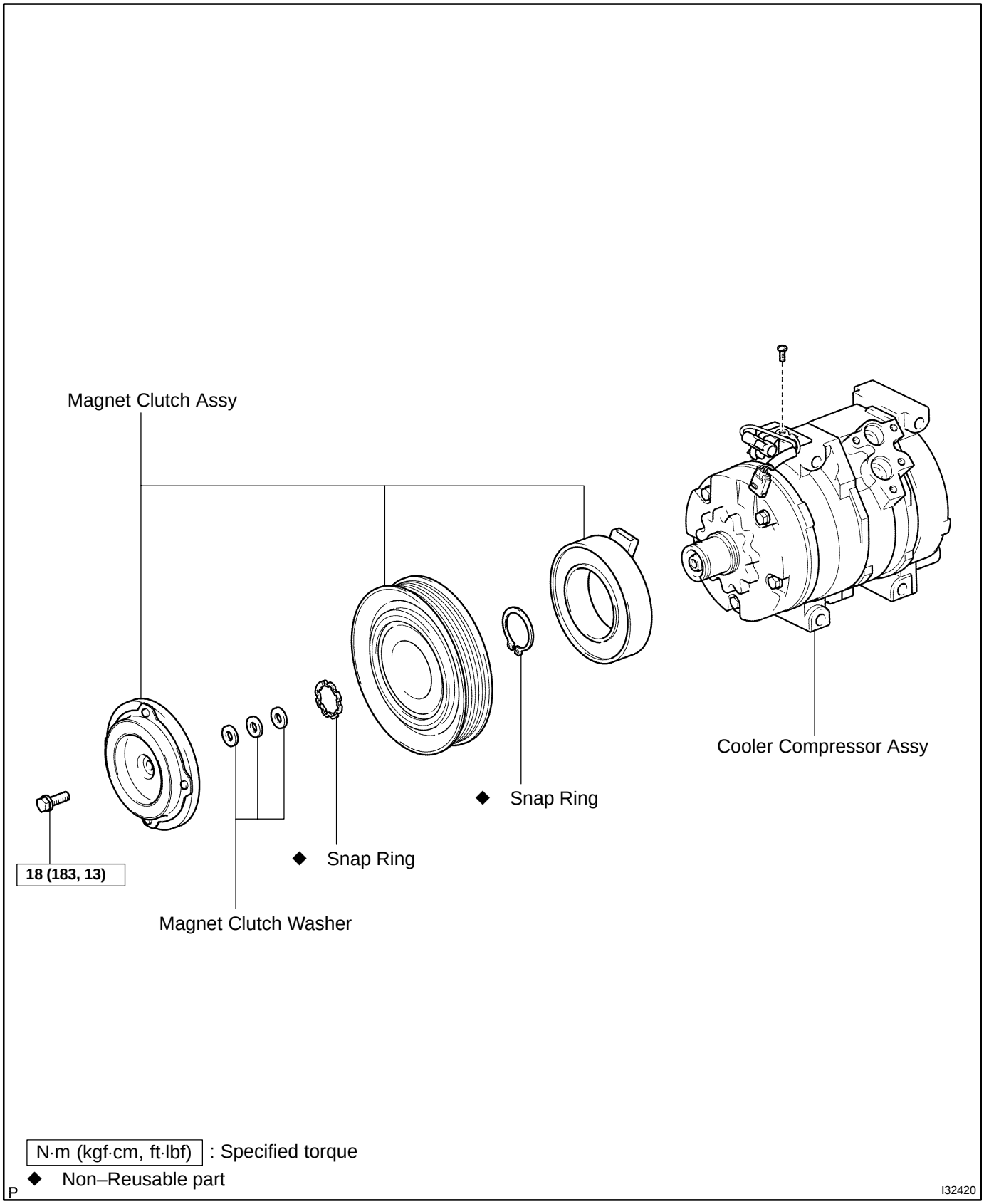

550JH–01

REPLACEMENT

HINT:

COMPONENTS: See page 55–39

1. DISCHARGE REFRIGERANT FROM REFRIGERATION SYSTEM (See page 55–11)

SST 07110–58060 (07117–58080, 07117–58090, 07117–78050, 07117–88060, 07117–88070, 07117–88080)

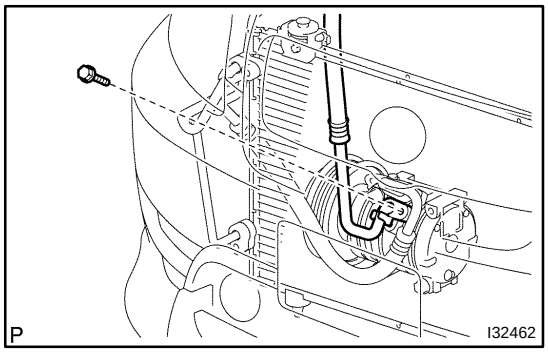

2. DISCONNECT COOLER REFRIGERANT SUCTION HOSE NO.1

(a) Remove the bolt and disconnect the cooler refrigerant suction hose No.1 from the compressor and magnetic clutch.

(b) Remove the O–ring from the cooler refrigerant suction hose No.1.

NOTICE:

Seal the opening of the disconnected parts using vinyl tape to prevent moisture and foreign matter from entering.

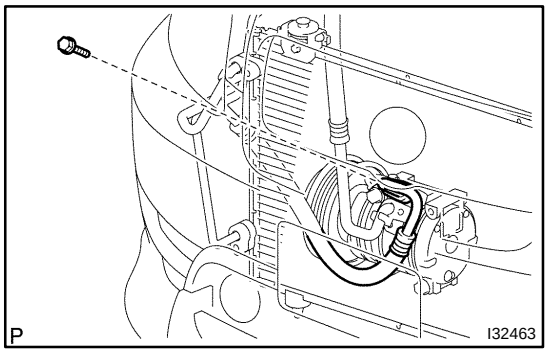

3. DISCONNECT DISCHARGE HOSE SUB–ASSY

(a) Remove the bolt and disconnect the discharge hose sub–assy from the compressor and magnetic clutch.

(b) Remove the O–ring from the discharge hose sub–assy.

NOTICE:

Seal the opening of the disconnected parts using vinyl tape to prevent moisture and foreign matter from entering.

4. REMOVE ENGINE UNDER COVER RH

5. REMOVE FAN AND GENERATOR V BELT (See page 14–4)

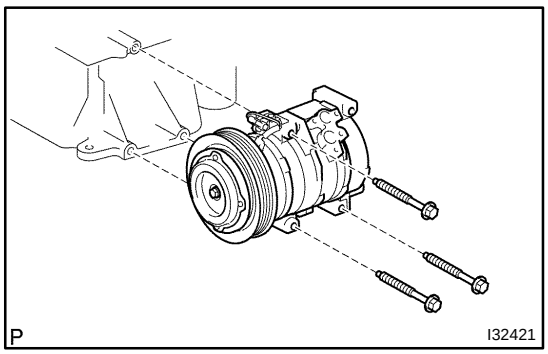

6. REMOVE COMPRESSOR AND MAGNETIC CLUTCH

(a) Disconnect the connector.

(b) Remove the 3 bolts and compressor and magnetic clutch.

7. REMOVE MAGNET CLUTCH ASSY

(a) Place the compressor and magnetic clutch in vise.

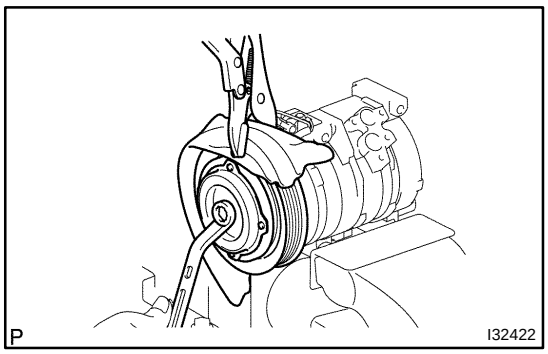

(b) Using a vise pliers, hold the magnet clutch hub.
(c) Remove the bolt, magnet clutch hub and magnet clutch washer.

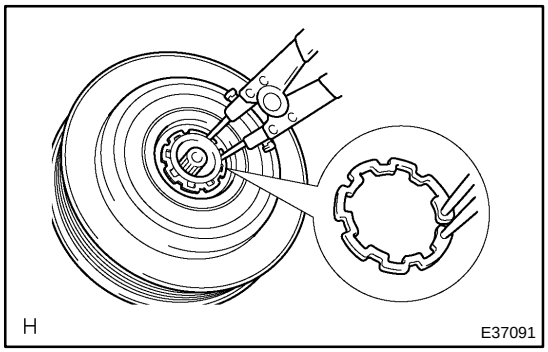

(d) Using a snap ring expander, remove the snap ring and magnet clutch rotor.
(e) Remove the screw, disconnect the connector.

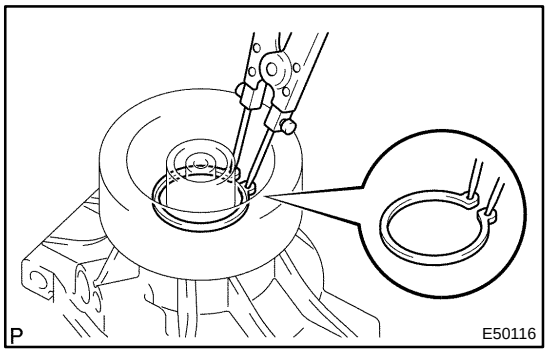

(f) Using a snap ring expander, remove the snap ring and magnet clutch starter.

8. REMOVE COOLER COMPRESSOR ASSY

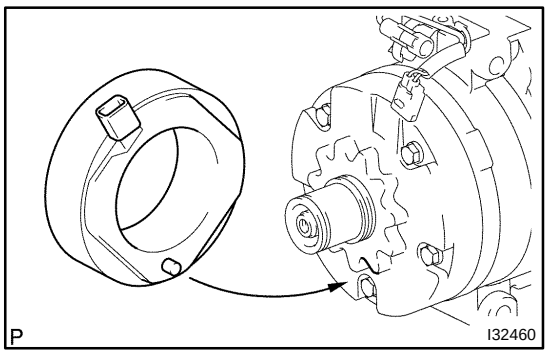

9. INSTALL MAGNET CLUTCH ASSY

(a) Matching the parts shown in the illustration, install the magnet clutch starter.

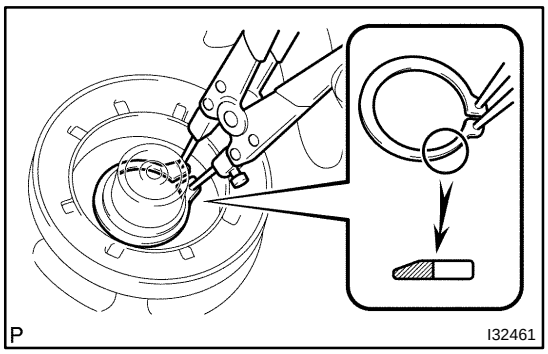

(b) Using a snap ring expander, install a new snap ring with the chamfered side facing up.
(c) Install the screw, connect the connector.

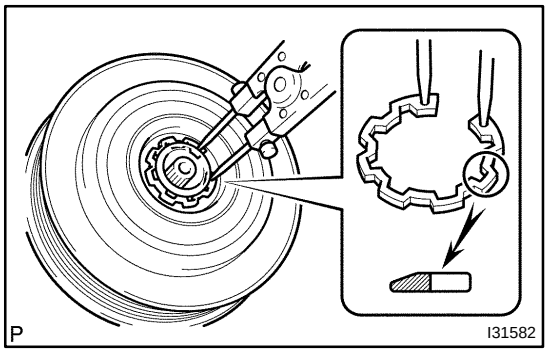

(d) Using a snap ring expander, install the magnet clutch rotor and a new snap ring with the chamfered side facing up.
(e) Install the magnet clutch washer and magnet clutch hub.

NOTICE:

Do not change the combination of the magnet clutch washers used before disassembly.

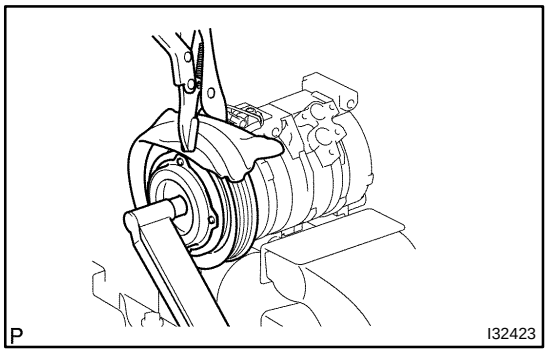

(f) Using a vise pliers, hold the magnet clutch hub and install the bolt.

Torque: 18 N·m (183 kgf·cm, 13 ft·lbf)

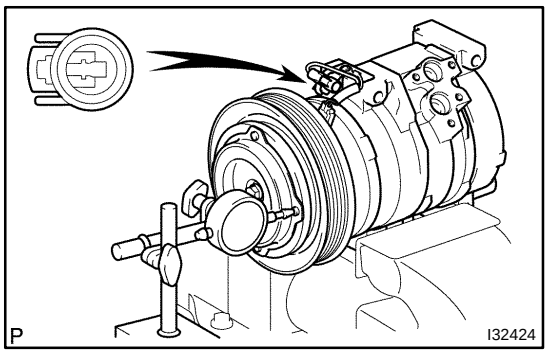

10. INSPECT MAGNETIC CLUTCH CLEARANCE

(a) Set the dial indicator to the magnet clutch hub.
(b) Connect the battery positive lead to the terminal 1 of magnet clutch connector and the negative lead to the earth wire. Turn on and off the magnet clutch and measure the clearance.

Standard clearance:

0.35 – 0.60 mm (0.013 – 0.023 in.)

If the measured value is out of the standard range, remove the magnet clutch hub and adjust it with magnet clutch washers.

NOTICE:

Adjustment shall be performed with 3 or less magnet clutch washers.

11. INSPECT COMPRESSOR OIL

(a) When replacing the compressor and magnetic clutch with new one, after gradually removing the refrigerant gas from the service valve, drain the following amount of oil from the new compressor and magnetic clutch before installation.

Standard:

(Oil capacity inside new compressor and magnetic clutch: 120 + 15 cc (4.0 + 0.5 fl. oz.)) – (Remaining oil amount in the removed compressor and magnetic clutch) = (Oil amount to be removed when replacing)

NOTICE:

- **When checking the compressor oil level, observe the precautions on the cooler removal/installation.**
- **Because compressor oil remains in the pipes of the vehicle, if a new compressor and magnetic clutch is installed without removing some oil inside, the oil amount becomes too much, preventing heat exchange in the refrigerant cycle and causing refrigerant failure.**
- **If the remaining oil in the removed compressor and magnetic clutch is too small in volume, check for oil leakage.**
- **Be sure to use ND–OIL8 for compressor oil.**

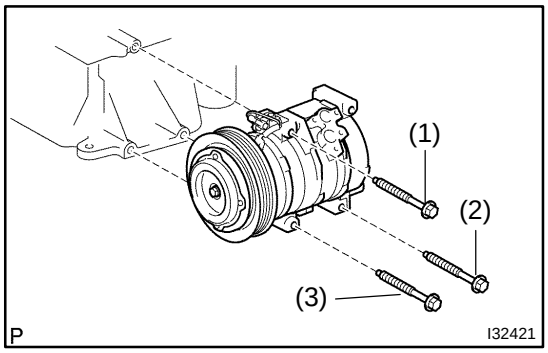

12. INSTALL COMPRESSOR AND MAGNETIC CLUTCH

(a) Install the compressor and magnetic clutch with the 3 bolts.

Toque: 29 N·m (295 kgf·cm, 21 ft·lbf)

NOTICE:

Tighten the bolts in following order shown in the illustration to install the compressor and magnetic clutch.

(b) Connect the connector.

13. INSTALL DISCHARGE HOSE SUB–ASSY

(a) Remove the attached vinyl tape from the hose.

(b) Sufficiently apply compressor oil to the new O–ring and fit surface of the compressor and magnetic clutch.

Compressor oil: ND–OIL8 or equivalent

(c) Install a O–ring to the discharge hose sub–assy.

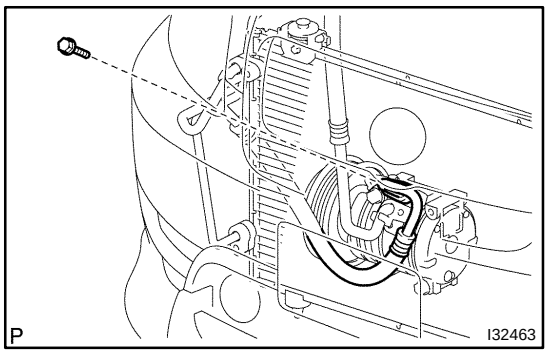

(d) Install the discharge hose sub–assy to the compressor and magnetic clutch with the bolt.

Torque: 9.8 N·m (100 kgf·cm, 87 in.·lbf)

14. INSTALL COOLER REFRIGERANT SUCTION HOSE NO.1

(a) Remove the attached vinyl tape from the hose.

(b) Sufficiently apply compressor oil to the new O–ring and fit surface of the compressor and magnetic clutch.
Compressor oil: ND–OIL8 or equivalent

(c) Install a O–ring to the cooler refrigerant suction hose No.1.

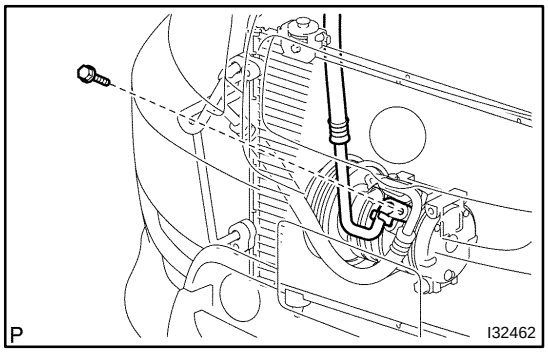

(d) Install the cooler refrigerant suction hose No.1 to the compressor and magnetic clutch with the bolt.
Torque: 9.8 N·m (100 kgf·cm, 87 in.·lbf)

15. CHARGE REFRIGERANT (See page 55–11)

SST 07110–58060 (07117–58060, 07117–58070, 07117–58080, 07117–58090, 07117–78050, 07117–88060, 07117–88070, 07117–88080), 07117–48130, 07117–48140

Specified amount: 470 ± 30 g (17.28 ± 1.06 oz.)

16. WARM UP ENGINE

17. INSPECT LEAKAGE OF REFRIGERANT (See page 55–11)

550JJ–01

COMPONENTS

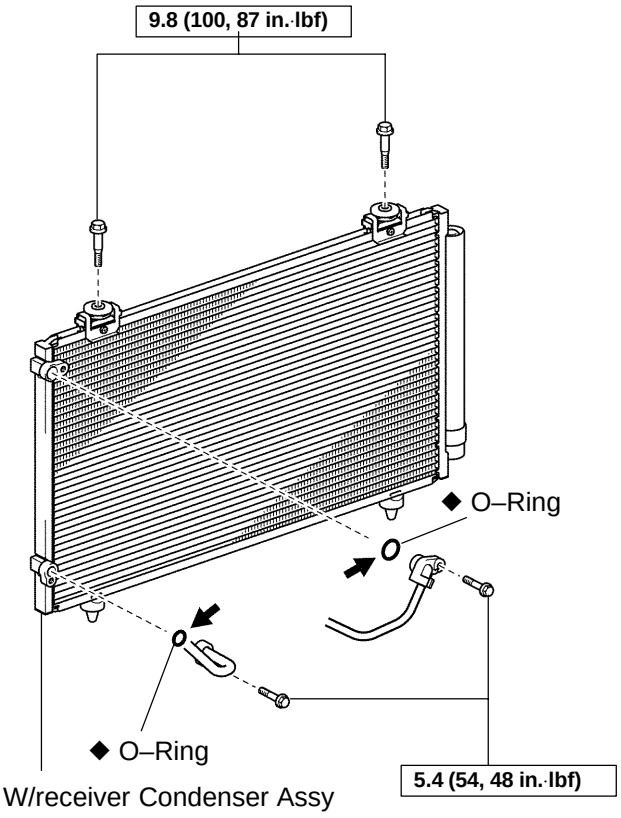

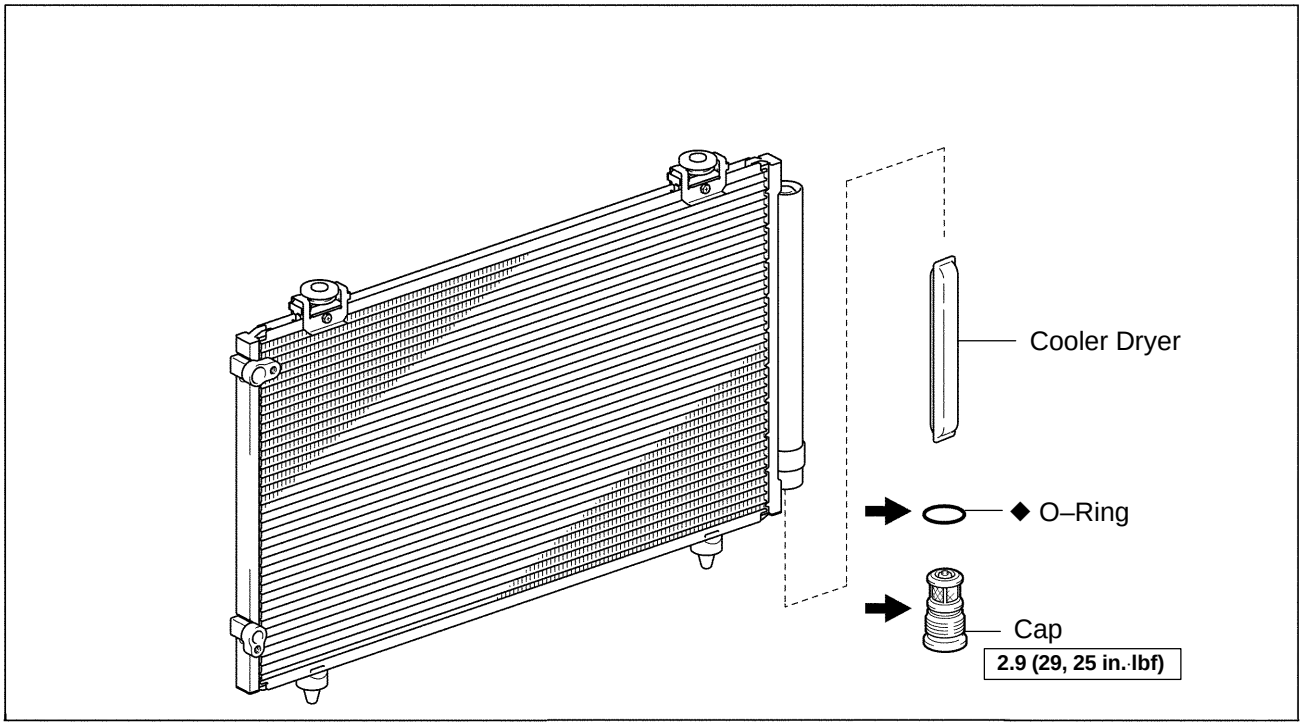

N·m (kgf·cm, ft·lbf) : Specified torque
Compressor Oil ND–OIL 8 or equivalent
◆ Non–reusable part

I32505

W/RECEIVER CONDENSER ASSY

550JI–01

ON–VEHICLE INSPECTION

1. INSPECT W/RECEIVER CONDENSER ASSY

(a) If a fin of the w/receiver condenser assy is dirty, clean it with water and dry it with compressor air.

NOTICE:

Do not damage the fin of the w/receiver condenser assy.

(b) If a fin of the w/receiver condenser assy is bent, make it straight using a screwdriver or pliers.

2. INSPECT W/RECEIVER CONDENSER ASSY FOR LEAKAGE OF REFRIGERANT

(a) Using a halogen leak detector, check pipe joints for gas leakage.

(b) If gas leakage is detected in a joint, check the torque of the joint.

550JK–01

OVERHAUL

HINT:

COMPONENTS: See page 55–46

1. DISCHARGE REFRIGERANT FROM REFRIGERATION SYSTEM (See page 55–11)

SST 07110–58060 (07117–58080, 07117–58090, 07117–78050, 07117–88060, 07117–88070, 07117–88080)

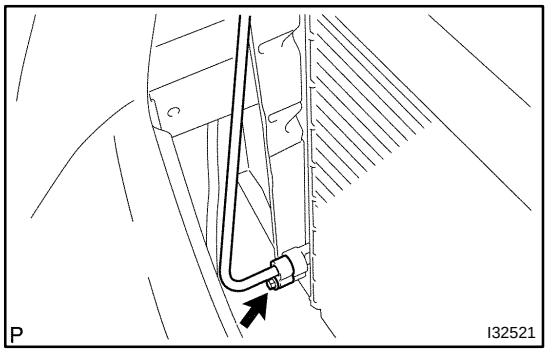

2. DISCONNECT COOLER REFRIGERANT LIQUID PIPE A

(a) Remove the bolt and disconnect the cooler refrigerant liquid pipe A from the w/receiver condenser assy.

(b) Remove the O–ring from the cooler refrigerant liquid pipe A.

NOTICE:

Seal the opening of the disconnected parts using vinyl tape to prevent moisture and foreign matter from entering.

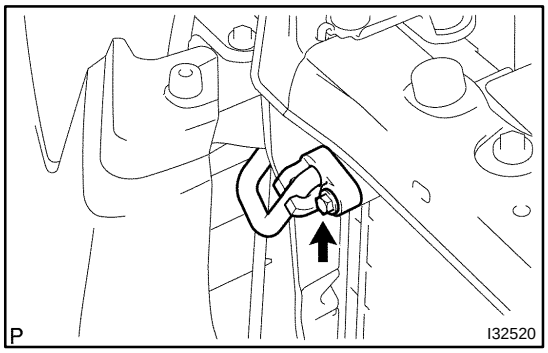

3. DISCONNECT DISCHARGE HOSE SUB–ASSY

(a) Remove the bolt and discharge hose sub–assy from the w/receiver condenser assy.

(b) Remove the O–ring from the discharge hose sub–assy.

NOTICE:

Seal the opening of the disconnected parts using vinyl tape to prevent moisture and foreign matter from entering.

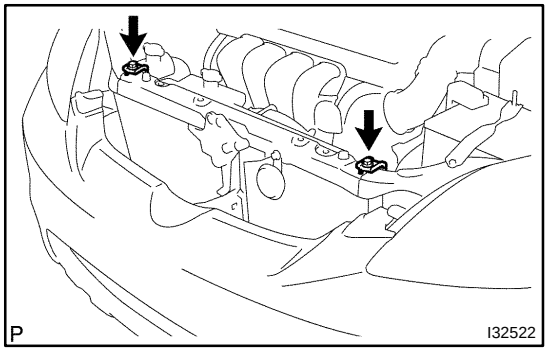

4. REMOVE W/RECEIVER CONDENSER ASSY

(a) Remove the 2 bolts and 2 radiator upper supports.

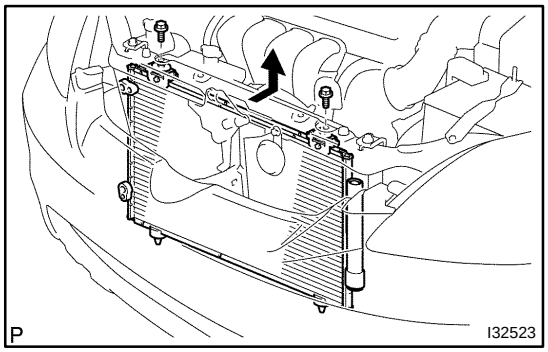

(b) Remove the 2 bolts.

(c) Slide the upper part of the radiator assy rearward to remove the w/receiver condenser assy.

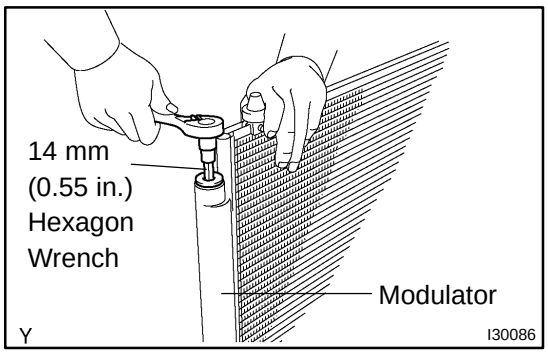

5. REMOVE COOLER DRYER

(a) Using a socket hexagon wrench 14 mm (0.55 in.), remove the cap from the modulator.

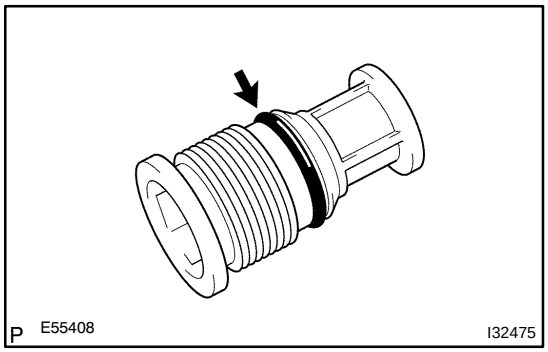

(b) Remove the O–ring from the cap.

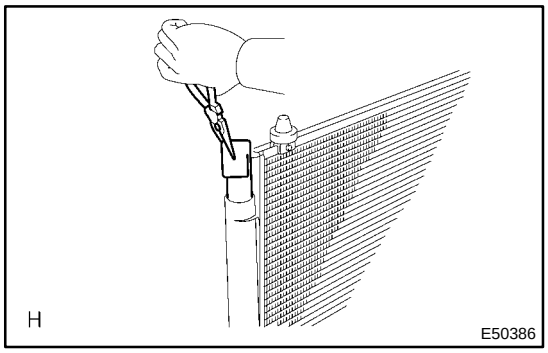

(c) Using pliers, remove the cooler dryer.

6. INSTALL COOLER DRYER

(a) Using pliers, install the cooler dryer.

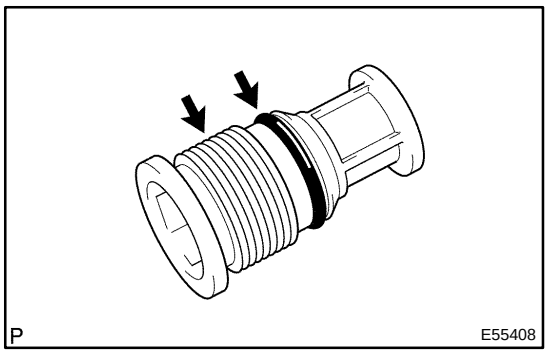

(b) Install the new O–ring to the cap.

(c) Sufficiently apply compressor oil to the fit surfaces of the O–ring and the cap.
Compressor oil: ND–OIL 8 or equivalent

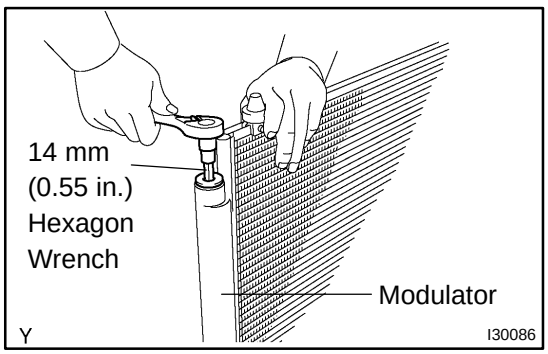

(d) Using a socket hexagon wrench 14 mm (0.55 in.), install the cap to the modulator.
Torque: 2.9 N·m (29 kgf·cm, 25 in.·lbf)

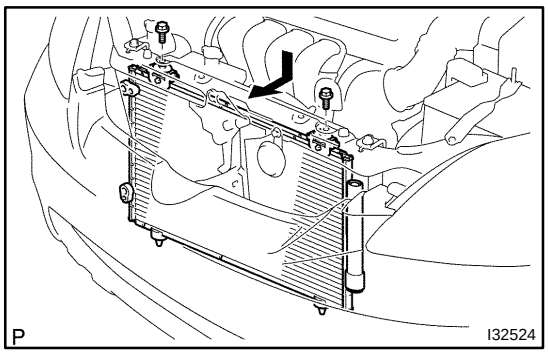

7. INSTALL W/RECEIVER CONDENSER ASSY

(a) Install the w/receiver condenser assy with the 2 bolts.
Torque: 9.8 N·m (100 kgf·cm, 87 in.·lbf)

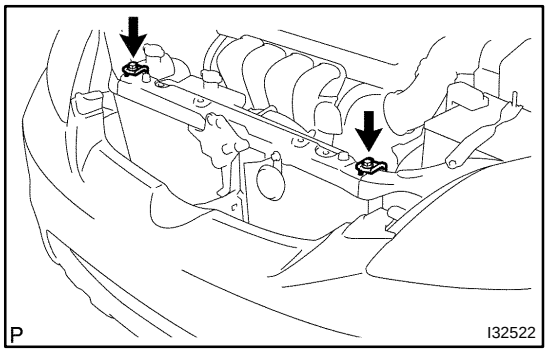

(b) Install the 2 radiator upper supports with the 2 bolts.

8. INSTALL DISCHARGE HOSE SUB–ASSY

(a) Remove the attached vinyl tape from the hose and connecting part of the w/receive condenser assy.
(b) Sufficiently apple compressor oil to the new O–ring and hose joint.
Compressor oil: ND–OIL 8 or equivalent
(c) Install a O–ring to the discharge hose sub–assy.

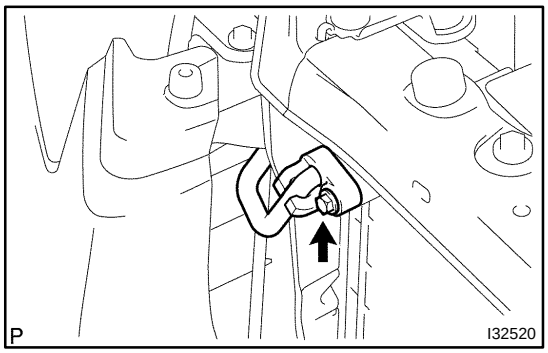

(d) Install the discharge hose sub–assy to the w/receive condenser assy with the bolt.
Torque: 5.4 N·m (54 kgf·cm, 48 in.·lbf)

9. INSTALL COOLER REFRIGERANT LIQUID PIPE A

(a) Remove the attached vinyl tape from the pipe and connecting part of the w/receive condenser assy.
(b) Sufficiently apple compressor oil to the new O–ring and pipe joint.
Compressor oil: ND–OIL 8 or equivalent
(c) Install a O–rings to the cooler refrigerant liquid pipe A.

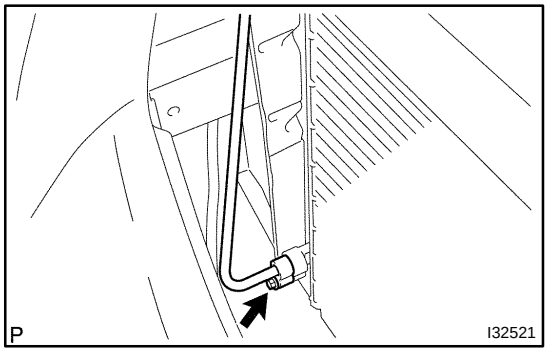

(d) Install the cooler refrigerant liquid pipe A to the w/receive condenser assy with the bolt.
Torque: 5.4 N·m (54 kgf·cm, 48 in.·lbf)

10. CHARGE REFRIGERANT (See page 55–11)

SST 07110–58060 (07117–58060, 07117–58070, 07117–58080, 07117–58090, 07117–78050, 07117–88060, 07117–88070, 07117–88080), 07117–48130, 07117–48140

Specified amount: 470 ± 30 g (17.28 ± 1.06 oz.)

11. WARM UP ENGINE

12. INSPECT LEAKAGE OF REFRIGERANT (See page 55–11)

COOLER COMPRESSOR ASSY (2ZZ–GE)

550JE–01

COMPONENTS

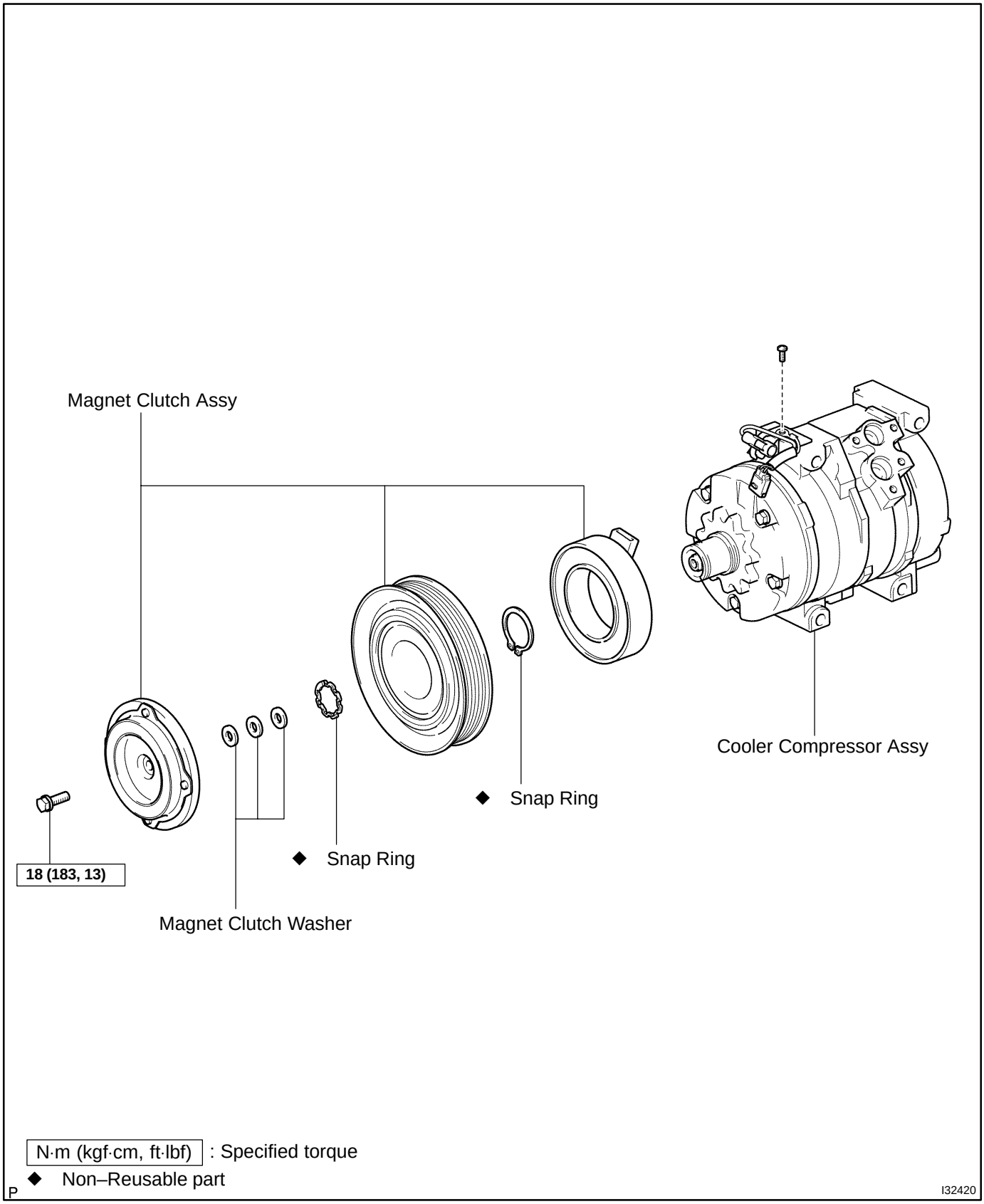

550JF–01

REPLACEMENT

HINT:

COMPONENTS: See page 55–33

1. DISCHARGE REFRIGERANT FROM REFRIGERATION SYSTEM (See page 55–11)

SST 07110–58060 (07117–58080, 07117–58090, 07117–78050, 07117–88060, 07117–88070, 07117–88080)

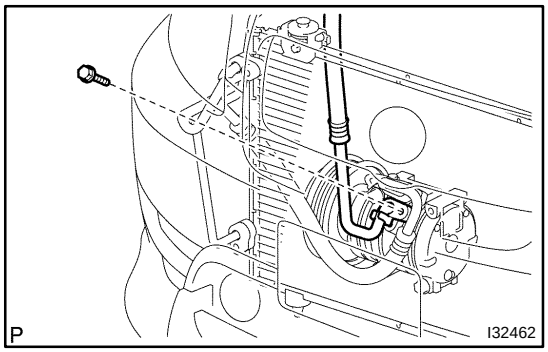

2. DISCONNECT COOLER REFRIGERANT SUCTION HOSE NO.1

(a) Remove the bolt and disconnect the cooler refrigerant suction hose No.1 from the compressor and magnetic clutch.

(b) Remove the O–ring from the cooler refrigerant suction hose No.1.

NOTICE:

Seal the opening of the disconnected parts using vinyl tape to prevent moisture and foreign matter from entering.

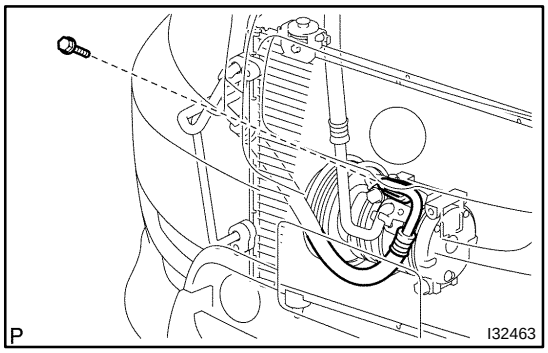

3. DISCONNECT DISCHARGE HOSE SUB–ASSY

(a) Remove the bolt and disconnect the discharge hose sub–assy from the compressor and magnetic clutch.

(b) Remove the O–ring from the discharge hose sub–assy.

NOTICE:

Seal the opening of the disconnected parts using vinyl tape to prevent moisture and foreign matter from entering.

4. REMOVE ENGINE UNDER COVER RH

5. REMOVE FAN AND GENERATOR V BELT (See page 14–177)

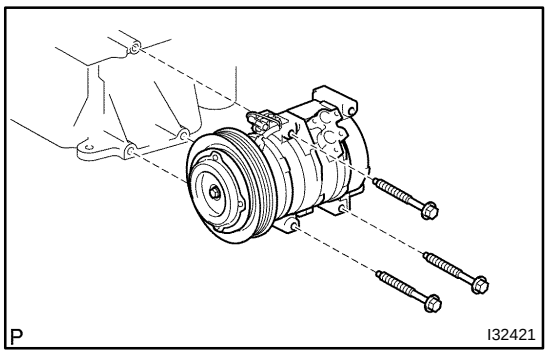

6. REMOVE COMPRESSOR AND MAGNETIC CLUTCH

(a) Disconnect the connector.

(b) Remove the 3 bolts and compressor and magnetic clutch.

7. REMOVE MAGNET CLUTCH ASSY

(a) Place the compressor and magnetic clutch in vise.

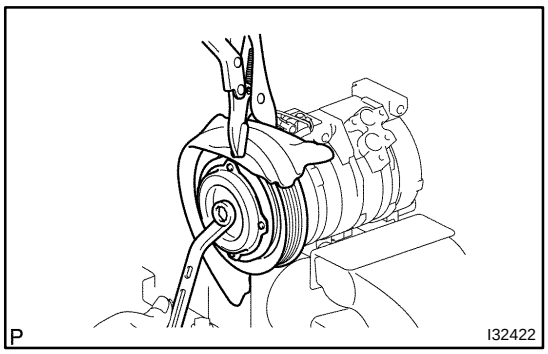

(b) Using a vise pliers, hold the magnet clutch hub.
(c) Remove the bolt, magnet clutch hub and magnet clutch washer.

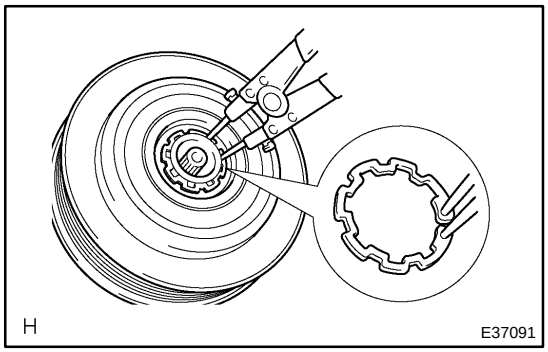

(d) Using a snap ring expander, remove the snap ring and magnet clutch rotor.
(e) Remove the screw, disconnect the connector.

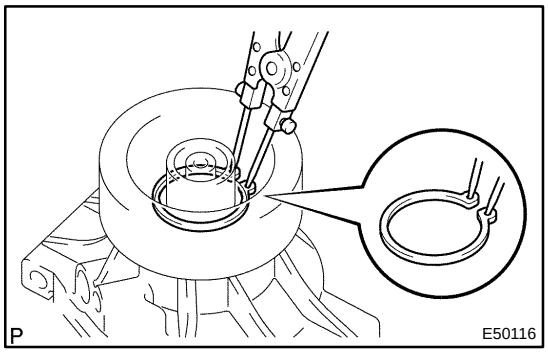

(f) Using a snap ring expander, remove the snap ring and magnet clutch starter.

8. REMOVE COOLER COMPRESSOR ASSY

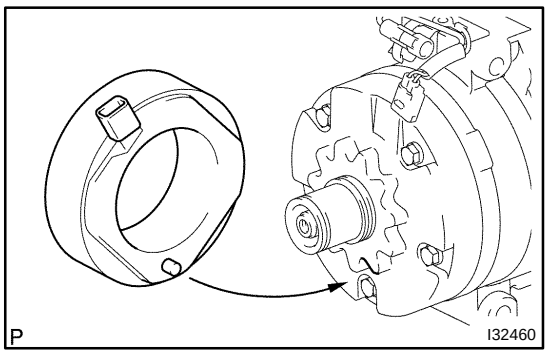

9. INSTALL MAGNET CLUTCH ASSY

(a) Matching the parts shown in the illustration, install the magnet clutch starter.

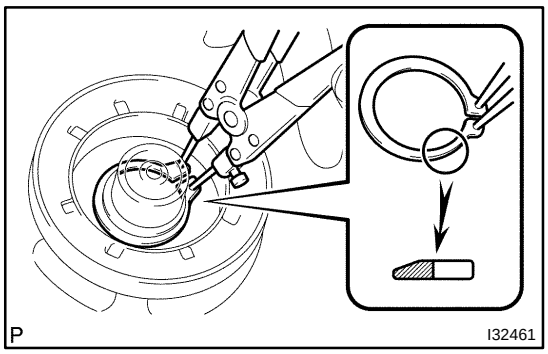

(b) Using a snap ring expander, install a new snap ring with the chamfered side facing up.
(c) Install the screw, connect the connector.

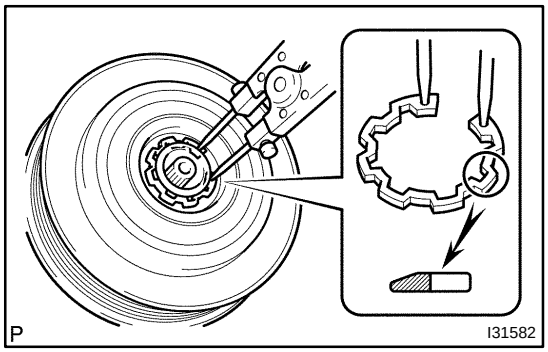

(d) Using a snap ring expander, install the magnet clutch rotor and a new snap ring with the chamfered side facing up.
(e) Install the magnet clutch washer and magnet clutch hub.

NOTICE:

Do not change the combination of the magnet clutch washers used before disassembly.

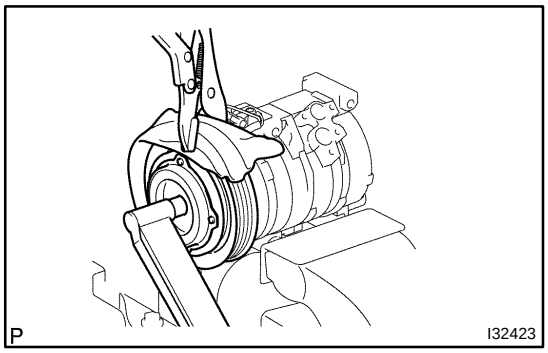

(f) Using a vise pliers, hold the magnet clutch hub and install the bolt.

Torque: 18 N·m (183 kgf·cm, 13 ft·lbf)

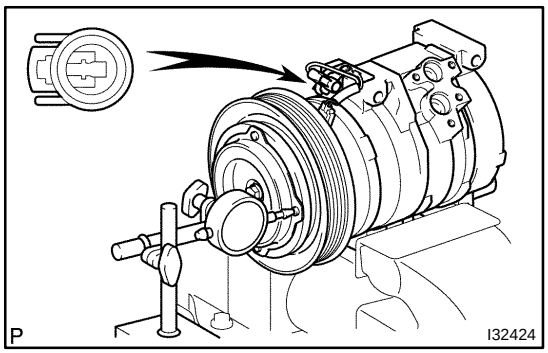

10. INSPECT MAGNETIC CLUTCH CLEARANCE

(a) Set the dial indicator to the magnet clutch hub.
(b) Connect the battery positive lead to the terminal 1 of magnet clutch connector and the negative lead to the earth wire. Turn on and off the magnet clutch and measure the clearance.

Standard clearance:

0.35 – 0.60 mm (0.013 – 0.023 in.)

If the measured value is out of the standard range, remove the magnet clutch hub and adjust it with magnet clutch washers.

NOTICE:

Adjustment shall be performed with 3 or less magnet clutch washers.

11. INSPECT COMPRESSOR OIL

(a) When replacing the compressor and magnetic clutch with new one, after gradually removing the refrigerant gas from the service valve, drain the following amount of oil from the new compressor and magnetic clutch before installation.

Standard:

(Oil capacity inside new compressor and magnetic clutch: 120 + 15 cc (4.0 + 0.5 fl. oz.)) – (Remaining oil amount in the removed compressor and magnetic clutch) = (Oil amount to be removed when replacing)

NOTICE:

- **When checking the compressor oil level, observe the precautions on the cooler removal/installation.**
- **Because compressor oil remains in the pipes of the vehicle, if a new compressor and magnetic clutch is installed without removing some oil inside, the oil amount becomes too much, preventing heat exchange in the refrigerant cycle and causing refrigerant failure.**
- **If the remaining oil in the removed compressor and magnetic clutch is too small in volume, check for oil leakage.**
- **Be sure to use ND–OIL8 for compressor oil.**

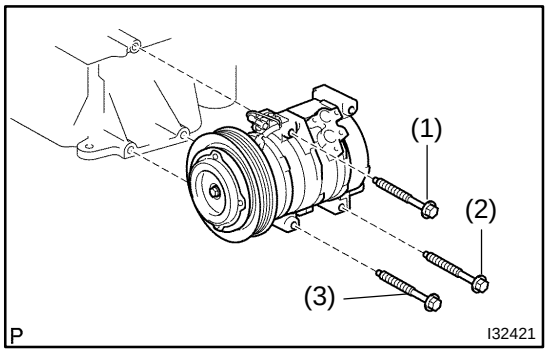

12. INSTALL COMPRESSOR AND MAGNETIC CLUTCH

(a) Install the compressor and magnetic clutch with the 3 bolts.

Toque: 29 N·m (295 kgf·cm, 21 ft·lbf)

NOTICE:

Tighten the bolts in following order shown in the illustration to install the compressor and magnetic clutch.

(b) Connect the connector.

13. INSTALL DISCHARGE HOSE SUB–ASSY

(a) Remove the attached vinyl tape from the hose.

(b) Sufficiently apply compressor oil to the new O–ring and fit surface of the compressor and magnetic clutch.

Compressor oil: ND–OIL8 or equivalent

(c) Install a O–ring to the discharge hose sub–assy.

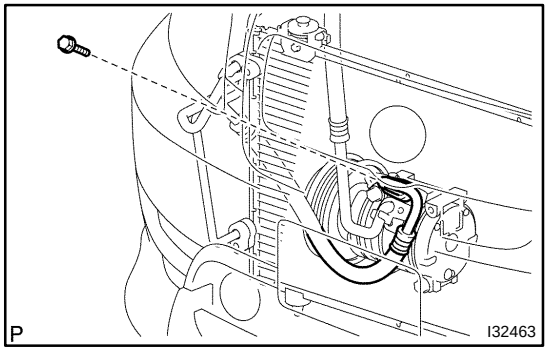

(d) Install the discharge hose sub–assy to the compressor and magnetic clutch with the bolt.

Torque: 9.8 N·m (100 kgf·cm, 87 in.·lbf)

14. INSTALL COOLER REFRIGERANT SUCTION HOSE NO.1

(a) Remove the attached vinyl tape from the hose.

(b) Sufficiently apply compressor oil to the new O–ring and fit surface of the compressor and magnetic clutch.
Compressor oil: ND–OIL8 or equivalent

(c) Install a O–ring to the cooler refrigerant suction hose No.1.

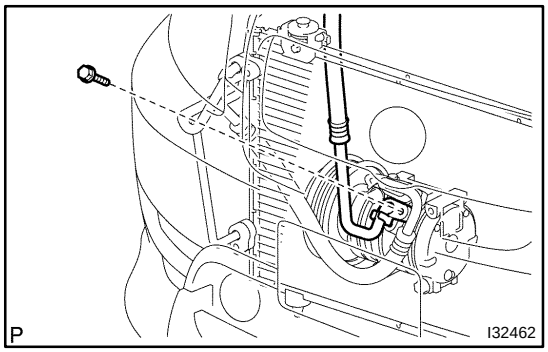

(d) Install the cooler refrigerant suction hose No.1 to the compressor and magnetic clutch with the bolt.
Torque: 9.8 N·m (100 kgf·cm, 87 in.·lbf)

15. CHARGE REFRIGERANT (See page 55–11)
SST 07110–58060 (07117–58060, 07117–58070, 07117–58080, 07117–58090, 07117–78050, 07117–88060, 07117–88070, 07117–88080), 07117–48130, 07117–48140
Specified amount: 470 ± 30 g (17.28 ± 1.06 oz.)

16. WARM UP ENGINE

17. INSPECT LEAKAGE OF REFRIGERANT (See page 55–11)

AIR CONDITIONING CONTROL ASSY

550JB–01

OVERHAUL

1. **REMOVE INSTRUMENT CLUSTER FINISH PANEL SUB–ASSY CENTER (See page 71–10)**
2. **REMOVE COMBINATION SWITCH ASSY (See page 71–10)**

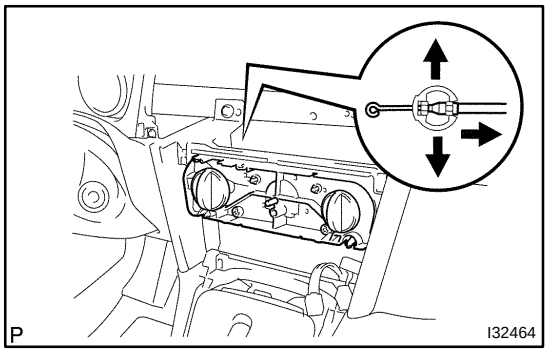

3. **REMOVE AIR CONDITIONING CONTROL ASSY**

(a) Using a screwdriver, open the claw of the cable clamp and disconnect the defroster damper control cable.

NOTICE:

- **Be careful not to bend the cable wire.**
- **If the cable wire bends, the air conditioning control assy operationality becomes worse.**

HINT:

Tape the screwdriver tip before use.

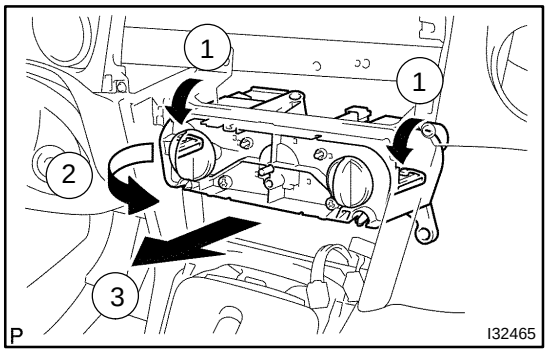

(b) Release the 2 fitting claws and pull out the air conditioning control assy, as shown in the illustration.

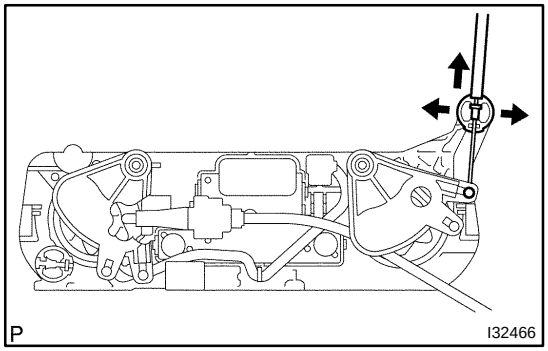

(c) Using a screwdriver, open the claw of the cable clamp and disconnect the airmix damper control cable.

NOTICE:

- **Be careful not to bend the cable wire.**
- **If the cable wire bends, the air conditioning control assy operationality becomes worse.**

HINT:

Tape the screwdriver tip before use.

(d) Disconnect the connector, remove the air conditioning control assy.

4. **REMOVE AIR CONDITIONING CONTROL BULB**

(a) Remove the 2 air conditioning control bulbs from the air conditioning control assy.

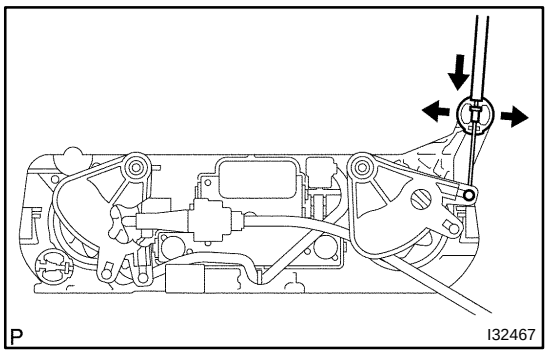

5. INSTALL AIR CONDITIONING CONTROL ASSY

(a) Install the inner cable end of the air mix damper control cable to the heater control lever.

(b) Install the outer cable of the airmix damper control cable to the cable clamp.

NOTICE:

- **Be careful not to bend the cable wire.**
- **If the cable wire bends, the air conditioning control assy operationality becomes worse.**

HINT:

- Operating the heater control knob and check that it properly stops at both ends of MAX. COOL and MAX. HOT and no recoil is identified.
- Check that the outer cable should not be disengaged (moved) from the air conditioning control assy when the cable is pulled.

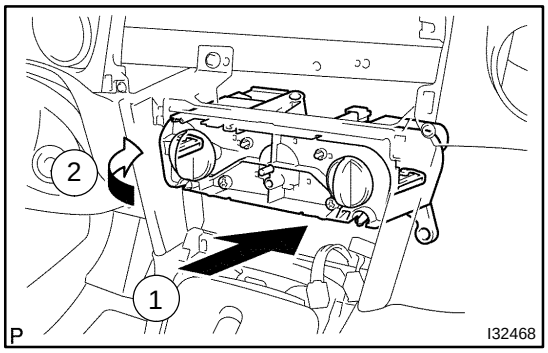

(c) Connect the connector, fit the 2 fitting claws of air conditioning control assy in the instrument panel sub–assy lower hole.

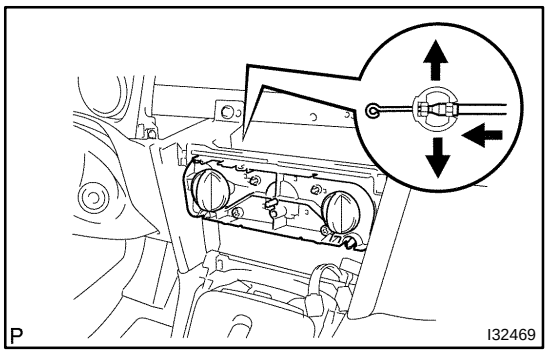

(d) Install the inner cable end of the defroster damper control cable to the heater control lever.

(e) Install the outer cable of the defroster damper control cable to the cable clamp.

NOTICE:

- **Be careful not to bend the cable wire.**
- **If the cable wire bends, the air conditioning control operationality becomes worse.**

HINT:

- Operating the heater control knob and check that it properly stops at both ends of FACE and DEF and no recoil is identified.
- Check that the outer cable should not be disengaged (moved) from the air conditioning control assy when the cable is pulled.

550J4–01

INSPECTION

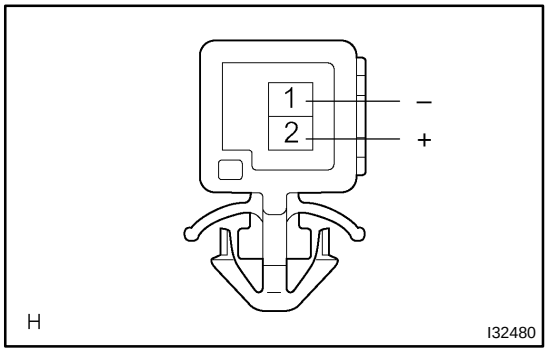

1. THERMISTOR, COOLER

(a) Check resistance between terminals 1 and 2 of cooler thermistor No. 1 at each temperature, as shown in the chart.

Resistance:

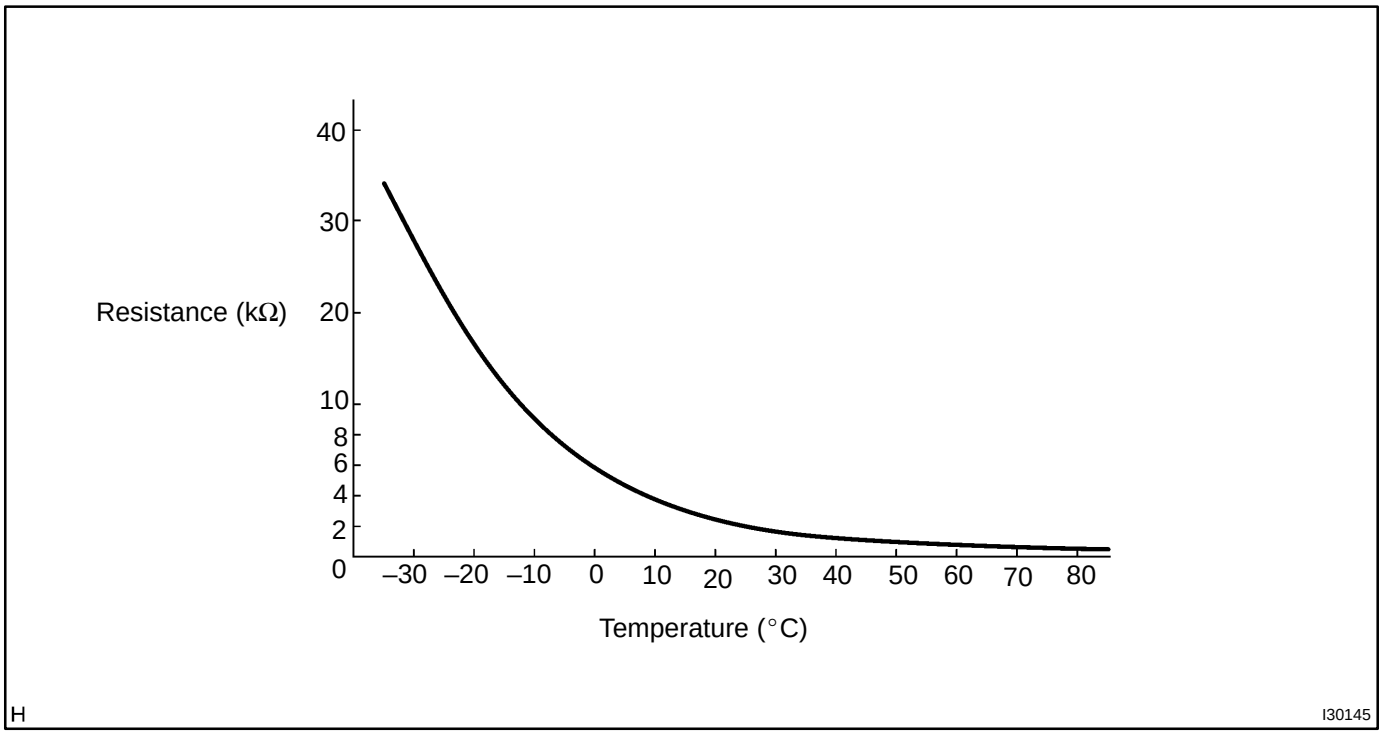

If resistance value is not as specified, replace the sensor.

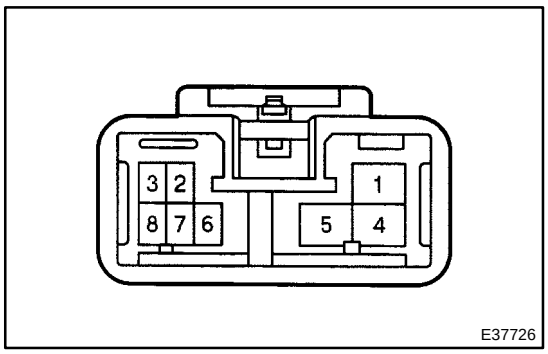

2. AIR CONDITIONING CONTROL ASSY

(a) Inspect blower switch continuity.

Condition / Circuit	Tester connection	Specified condition
OFF	–	No continuity
LO	1 – 8	Continuity
M1	1 – 6 – 8	Continuity
M2	1 – 5 – 8	Continuity
HI	1 – 4 – 8	Continuity

If continuity is not as specified, replace the air conditioner control assy.

(b) Inspect illumination operation.

Connect the positive (+) lead from the battery to terminal 2 and negative (–) lead to terminal 3 then check that the illuminations light up.

If there is bulb not light up, replace the bulb.

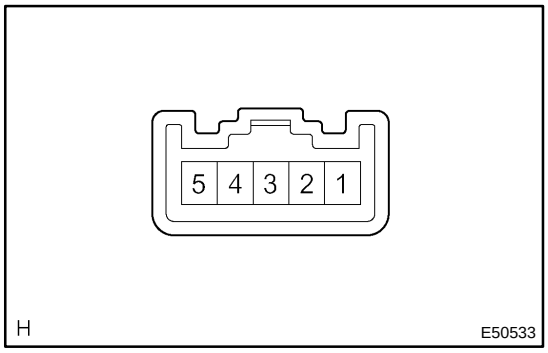

3. COMBINATION SWITCH ASSY

(a) Inspect switch continuity.

Check the continuity between terminals while switch is pressed, as shown in the chart.

Tester connection	Specified condition
2 – 5	Continuity

If continuity is not as specified, replace the cooler switch.

(b) Inspect illumination operation.

Connect the positive (+) lead from the battery to terminal 4 and negative (–) lead to terminal 3 then check that the illuminations light up.

If operation is not as specified, replace the cooler switch.

(c) Inspect indicator operation.

(1) Connect the positive (+) lead from the battery to terminal 2 and the negative (–) lead to terminal 1.

(2) Push the A/C button in and then check that the indicator lights up.

If operation is not as specified, replace the cooler switch.

(d) Inspect dimming operation

(1) Connect the positive (+) lead from the battery to terminal 2 and the negative (–) lead to terminal 1 while press the switch.

(2) Connect the positive (+) lead from battery to terminal 4 and then check that the indicator dims.

If operation is not as specified, replace the cooler switch.

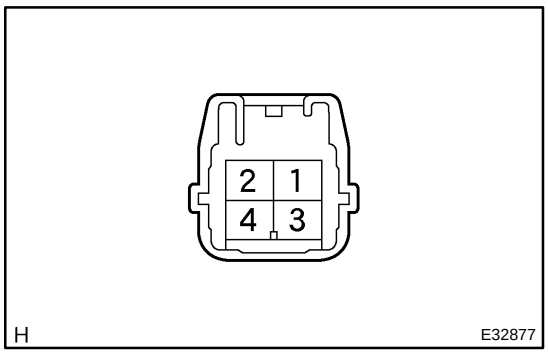

4. BLOWER RESISTOR

(a) Measure resistance between terminals, as shown in the chart below.

Tester connection	Specified condition
1 – 2	1.398 – 1.605 Ω
1 – 3	0.465 – 0.535 Ω
1 – 4	3.069 – 3.531 Ω

If resistance is not as specified, replace the blower resistor.

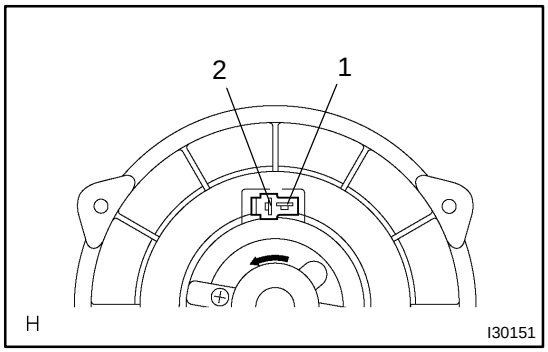

5. BLOWER W/FAN MOTOR SUB–ASSY

(a) Connect the positive (+) lead from the battery to terminal 2 and negative (–) to terminal 1, then check that the motor operation smoothly.

If operation is not as specified, replace the blower motor.

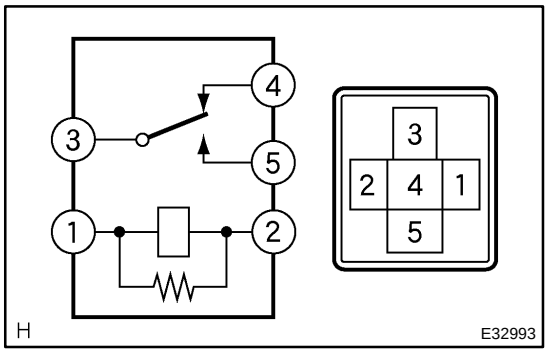

6. HEATER BLOWER MOTOR RELAY ASSY

Condition	tester connection	Specified condition
constant	1 – 2 3 – 4	Continuity
Apply B+ between terminals 1 and 2.	3 – 5	Continuity

If continuity is not as specified, replace the heater blower motor relay.

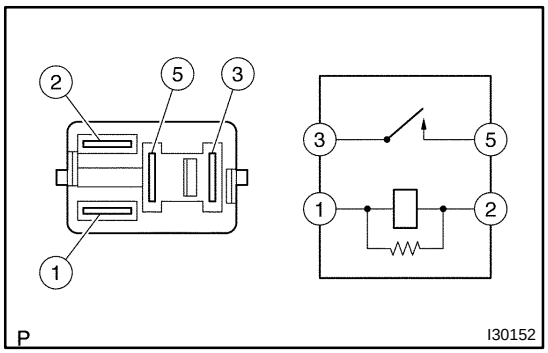

7. MAGNET–CLUTCH RELAY

Condition	tester connection	Specified condition
constant	1 – 2	Continuity
Apply B+ between terminals 1 and 2.	3 – 5	Continuity

If continuity is not as specified, replace the magnet–clutch relay.

550J3–01

ON–VEHICLE INSPECTION

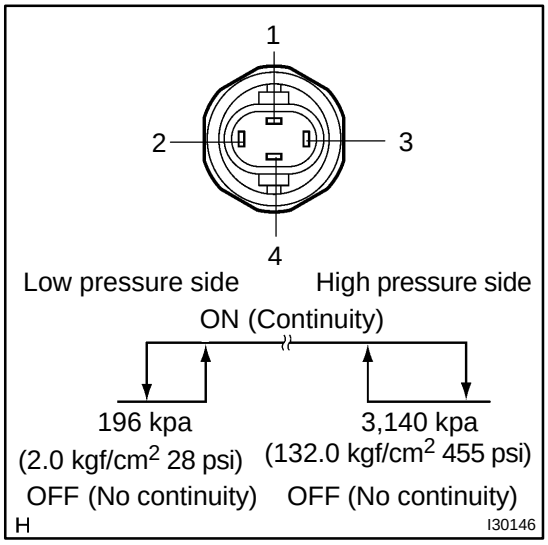

1. INSPECT PRESSURE SWITCH NO.1.

(a) Magnetic clutch control:
Inspect pressure switch operation.
(1) Set on the manifold gauge set.
(2) Connect the positive (+) lead from the ohmmeter to terminal 4 and the negative (–) lead to terminal 1.
(3) Check continuity between terminals when refrigerant pressure is changed, as shown in the illustration.

If operation is not as specified, replace the pressure switch.

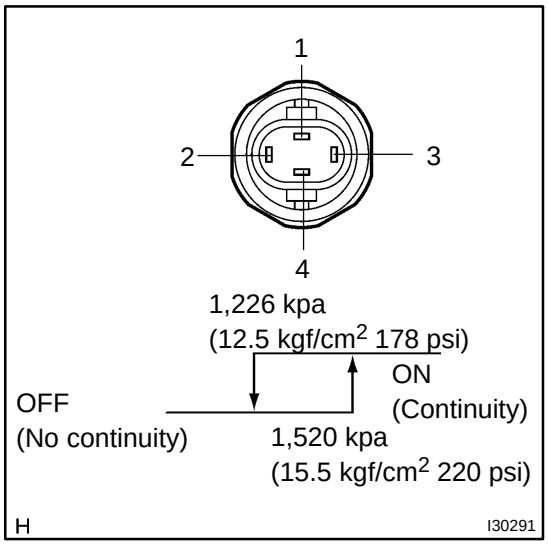

(b) Cooling fan control:
Inspect pressure switch operation.
(1) Connect the positive (+) lead from the ohmmeter to terminal 2 and the negative (–) lead to terminal 3.
(2) Check continuity between terminals when refrigerant pressure is changed, as shown in the illustration.

If operation is not as specified, replace the pressure switch.

2. COOLER COMPRESSOR ASSY W/MAGNETIC CLUTCH

(a) Connect the positive (+) lead from the battery to terminal and the negative (–) lead to the body ground.
(b) Check that the magnetic clutch energized.

If operation is not as specified, replace the magnet clutch assy.

AIR CONDITIONING SYSTEM

PRECAUTION

550J2–01

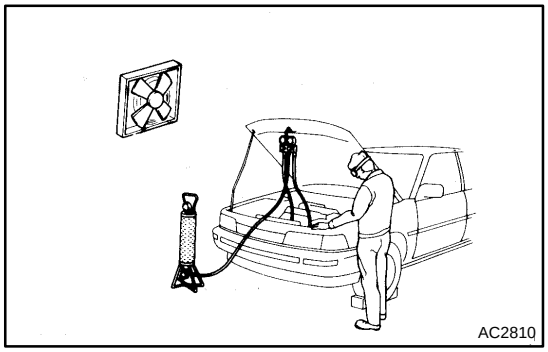

1. DO NOT HANDLE REFRIGERANT IN AN ENCLOSED AREA OR NEAR AN OPEN FLAME

2. ALWAYS WEAR EYE PROTECTION

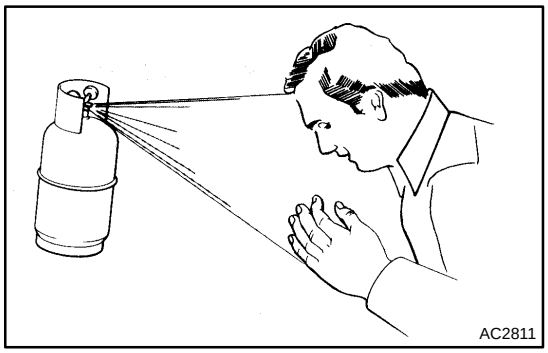

3. BE CAREFUL NOT TO GET LIQUID REFRIGERANT IN YOUR EYES OR ON YOUR SKIN

If liquid refrigerant gets in your eyes or on your skin.

(a) Wash the area with lots of cool water.

CAUTION:

Do not rub your eyes or skin.

(b) Apply clean petroleum jelly to the skin.

(c) Go immediately to a physician or hospital for professional treatment.

4. NEVER HEAT CONTAINER OR EXPOSE IT TO NAKED FLAME

5. BE CAREFUL NOT TO DROP CONTAINER AND NOT TO APPLY PHYSICAL SHOCKS TO IT

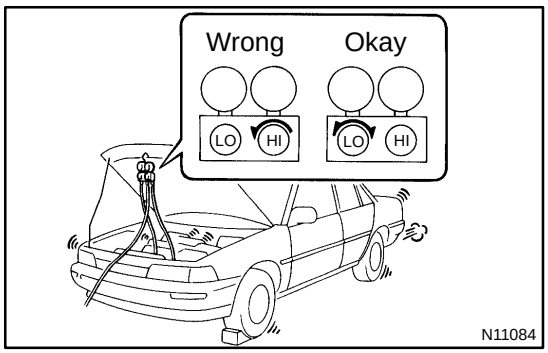

6. DO NOT OPERATE COMPRESSOR WITHOUT ENOUGH REFRIGERANT IN REFRIGERANT SYSTEM

If there is not enough refrigerant in the refrigerant system oil lubrication will be insufficient and compressor burnout may occur, so take care to avoid this, necessary care should be taken.

7. DO NOT OPEN HIGH PRESSURE MANIFOLD VALVE WHILE COMPRESSOR IS OPERATING

If the high pressure valves opened, refrigerant flows in the reverse direction and could cause the charging cylinder to rupture, so open and close the only low pressure valve.

8. BE CAREFUL NOT TO OVERCHARGE SYSTEM WITH REFRIGERANT

If refrigerant is overcharged, it causes problems such as insufficient cooling, poor fuel economy, engine overheating etc.

SEAT POSITION AIR BAG SENSOR

60080–03

COMPONENTS

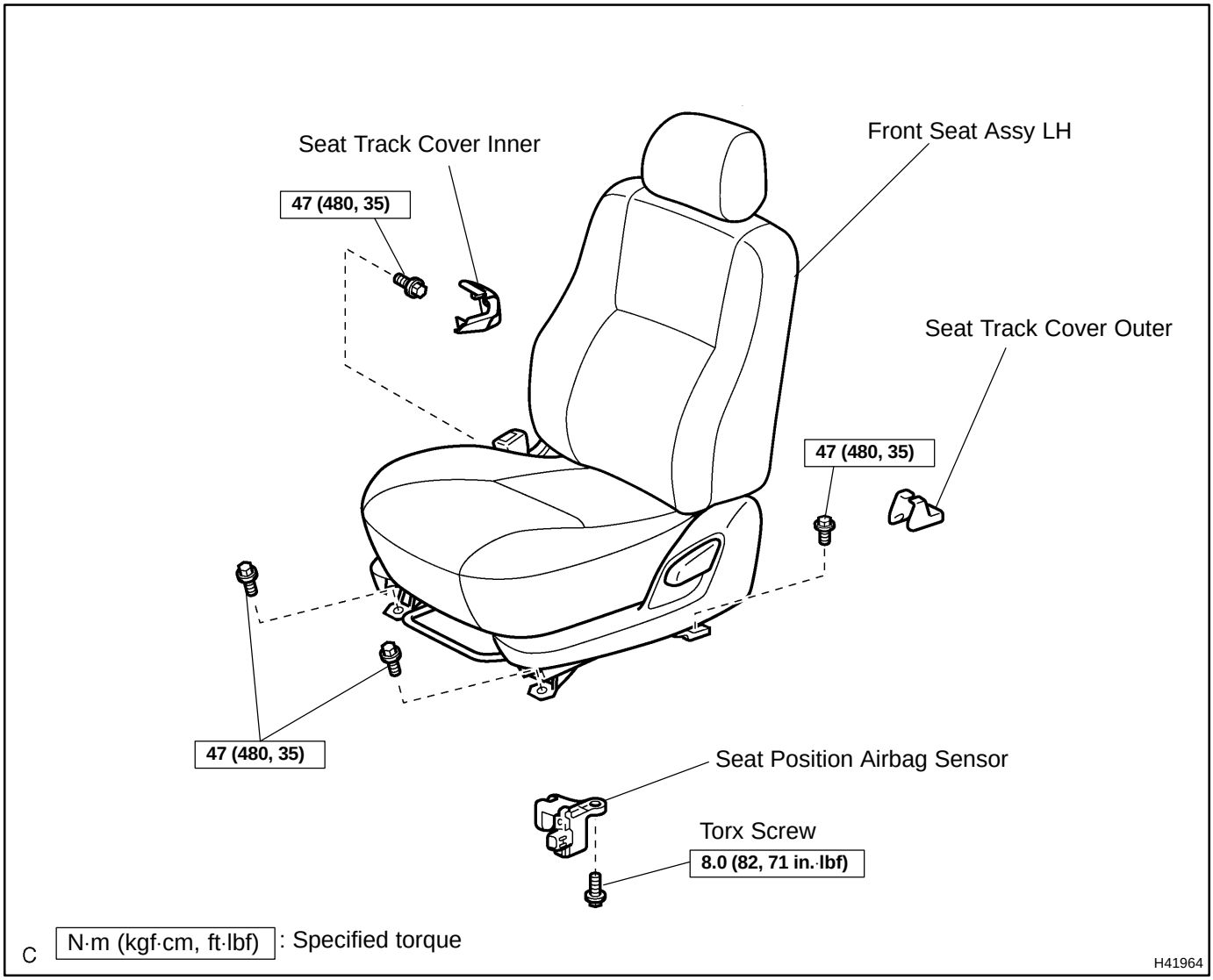

60081–03

REPLACEMENT

HINT:

COMPONENTS: See page 60–46

1. **PRECAUTION (See page 60–1)**
2. **SEPARATE BATTERY NEGATIVE TERMINAL (See page 60–1)**
3. **REMOVE FRONT SEAT TRACK COVER LH REAR INNER**
4. **REMOVE FRONT SEAT TRACK COVER LH REAR OUTER**
5. **REMOVE FRONT SEAT ASSY LH (See page 72–2)**

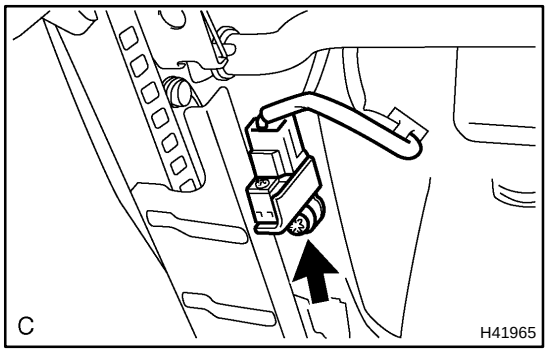

6. **REMOVE SEAT POSITION AIR BAG SENSOR**

(a) Disconnect the connector of the seat position airbag sensor.

(b) Using a torx socket wrench (T30), remove the torx screw and seat position airbag sensor.

7. **INSPECT SEAT POSITION AIR BAG SENSOR (See page 60–8)**
8. **INSTALL SEAT POSITION AIR BAG SENSOR**

(a) Using a torx socket wrench (T30), install the seat position airbag sensor with the torx screw.
Torque: 8.0 N·m (82 kgf·cm, 71 in.·lbf)

(b) Connect the connector of the seat position airbag sensor.

NOTICE:

- **Installation of the connector is done with the sensor assembly installed. Make sure the sensor assembly is installed with the specified torque.**
- **If the sensor assembly has been dropped, or there are cracks, dents or other defects in the case, bracket or connector, replace the sensor assembly with a new one.**
- **When installing the sensor assembly, take care that the SRS wiring does not interfere with other parts and is not pinched between other parts.**
- **After installation, shake the sensor assembly to check that there is no looseness.**

9. **INSTALL FRONT SEAT ASSY LH**
Torque: 47 N·m (480 kgf·cm, 35 ft·lbf)
10. **INSPECT SRS WARNING LIGHT (See page 05–543)**

AIR BAG FRONT RH SENSOR

600C9–01

COMPONENTS

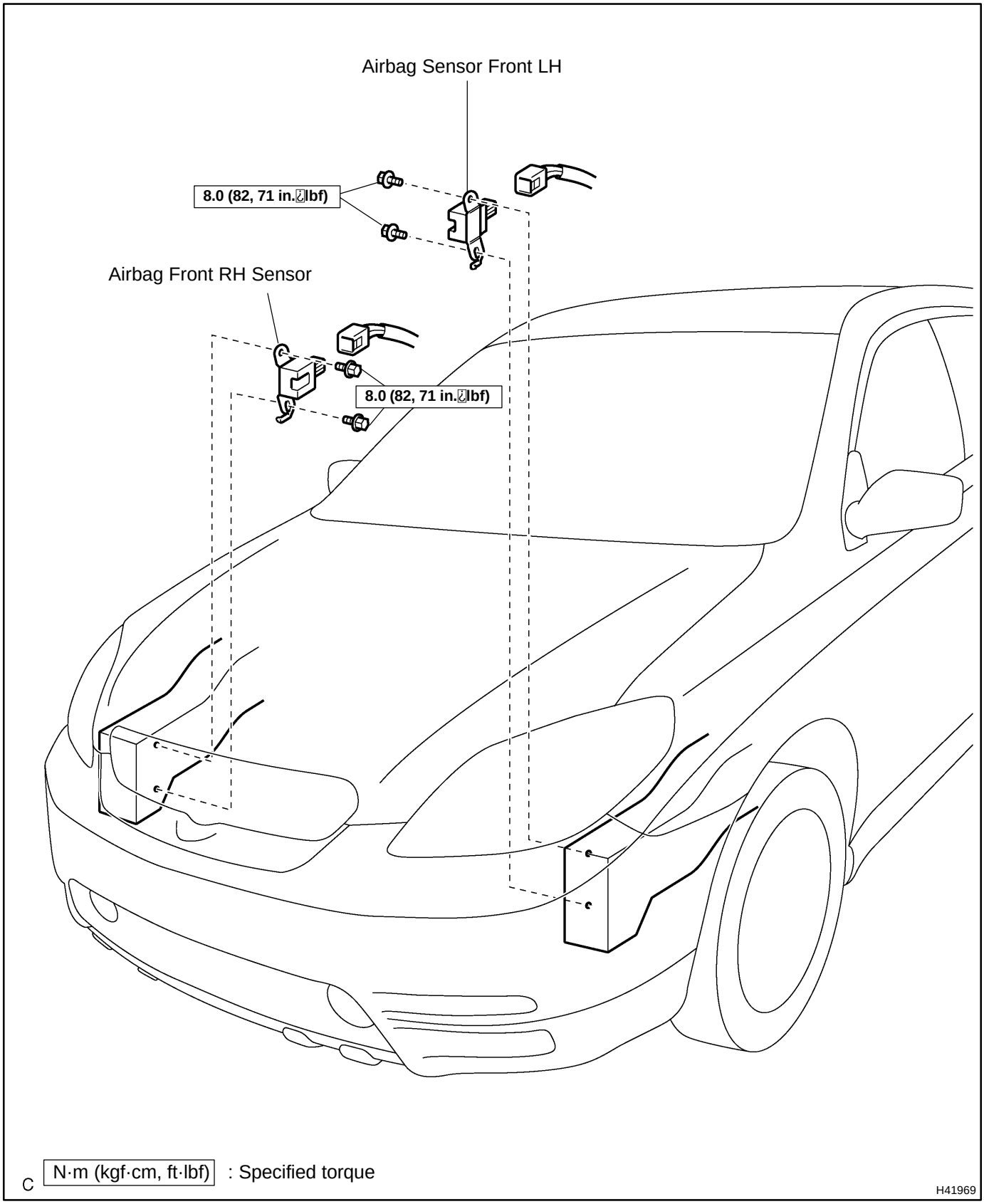

600CA–01

REPLACEMENT

HINT:

COMPONENTS: See page 60–40

1. PRECAUTION (See page 60–1)

2. SEPARATE BATTERY NEGATIVE TERMINAL (See page 60–1)

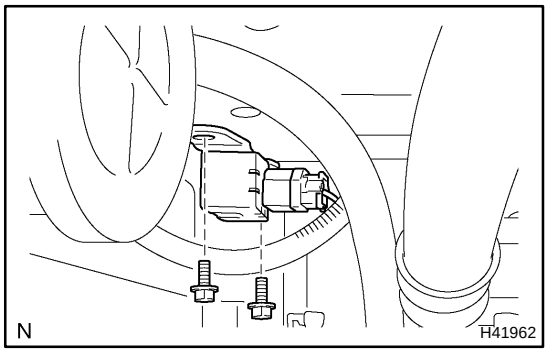

3. REMOVE AIR BAG FRONT RH SENSOR

(a) Disconnect the connector from the airbag front RH sensor.

(b) Remove the 2 bolts and airbag front RH sensor.

4. INSPECT AIR BAG FRONT RH SENSOR (See page 60–8)

5. INSTALL AIR BAG FRONT RH SENSOR

(a) Check that the ignition switch turn OFF.

(b) Check that the battery negative (–) terminal is disconnected.

NOTICE:

Do not start the operation for 90 seconds after removing the terminal.

(c) Install the airbag front RH sensor with the 2 bolts.

Torque:8.0 N·m (82 kgf·cm, 71 in.·lbf)

(d) Connect the connector to the airbag front RH sensor.

(e) Check that no play is identified.

6. INSPECT SRS WARNING LIGHT (See page 05–543)

AIR BAG SENSOR FRONT LH

600CN–01

COMPONENTS

(See page 60–40)

REPLACEMENT

HINT:

COMPONENTS: See page 60–40

1. PRECAUTION (See page 60–1)

2. SEPARATE BATTERY NEGATIVE TERMINAL (See page 60–1)

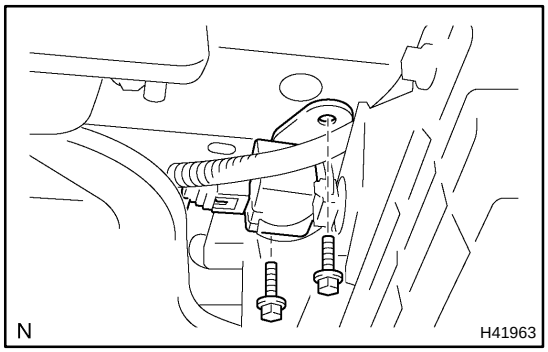

3. REMOVE AIR BAG SENSOR FRONT LH

(a) Disconnect the connector from the airbag sensor front LH.

(b) Remove the 2 bolts and airbag sensor front LH.

4. INSPECT AIR BAG SENSOR FRONT LH (See page 60–8)

5. INSTALL AIR BAG SENSOR FRONT LH

(a) Check that the ignition switch turn OFF.

(b) Check that the battery negative (–) terminal is disconnected.

NOTICE:

Do not start the operation for 90 seconds after removing the terminal.

(c) Install the airbag sensor front LH with the 2 bolts.

Torque: 8.0 N·m (82 kgf·cm, 71 in.·lbf)

(d) Connect the connector to the front airbag sensor front LH.

(e) Check that no play is identified.

6. INSPECT SRS WARNING LIGHT (See page 05–543)

600C7–01

ON–VEHICLE INSPECTION

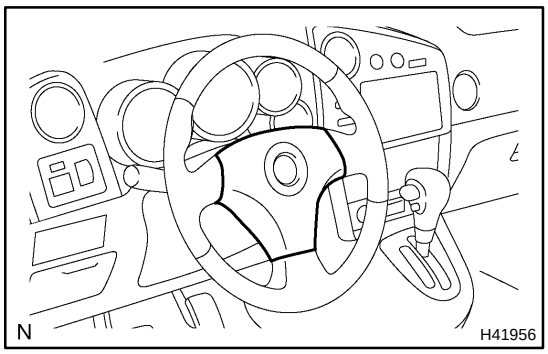

1. HORN BUTTON ASSY(VEHICLES NOT INVOLVED IN COLLISION)

(a) Do a diagnostic system check (See page 05–543).

(b) Do a visual check which includes the following item with the horn button assy (with airbag) installed in the vehicle. Check cuts, minute cracks or marked discoloration on the horn button assy top surface and in the grooved portion.

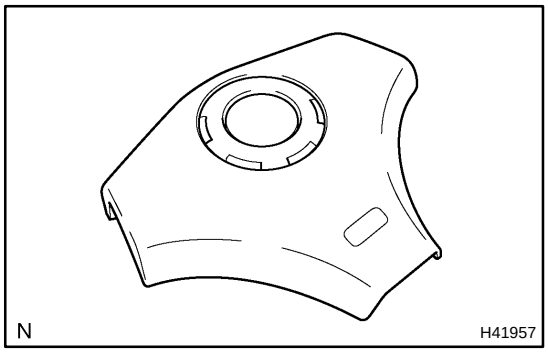

2. HORN BUTTON ASSY(VEHICLE INVOLVED IN COLLISION AND AIRBAG IS NOT DEPLOYED)

(a) Do a diagnostic system check (See page 05–543).

(b) Do a visual check which includes the following items with the horn button assy (with airbag) removed from the vehicle.

- Check cuts, minute cracks or marked discoloration on the horn button assy top surface and in the grooved portion.
- Check cuts and cracks in wire harness, and chipping in connectors.
- Check the deformation on the steering wheel.

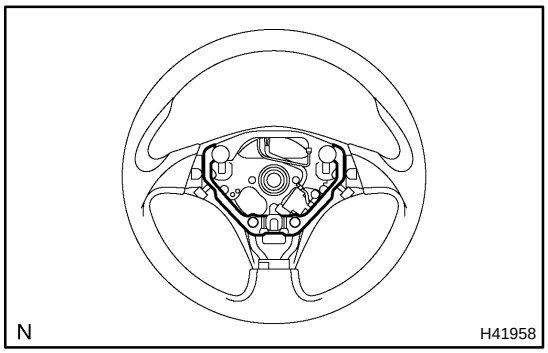

- Check the deformation on the horn button contact plate of the steering wheel assy.

HINT:

- If the horn button contact plate of the steering wheel assy is deformed, never repair it. Always replace the steering wheel assy with a new one.

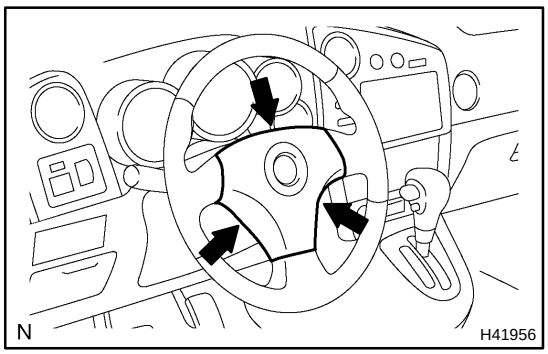

- There should be no interference between the horn button assy and steering wheel, and the clearance should be uniform all the way around when the new horn button assy is installed on the steering wheel.

CAUTION:

For removal and installation of the horn button assy, see page 60–13, and be sure to follow the correct procedure.

3. HORN BUTTON ASSY(VEHICLE INVOLVED IN COLLISION AND AIRBAG IS DEPLOYED)

(a) Do a diagnostic system check (See page 05–543).

(b) Do a visual check which includes the following item with the horn button assy (with airbag) removed from the vehicle.

Check the damage on the spiral cable connector and wire harness.

HINT:

There should be no interference between the horn button assy and steering wheel, and the clearance should be uniform all the way around when the new horn button assy is installed on the steering wheel.

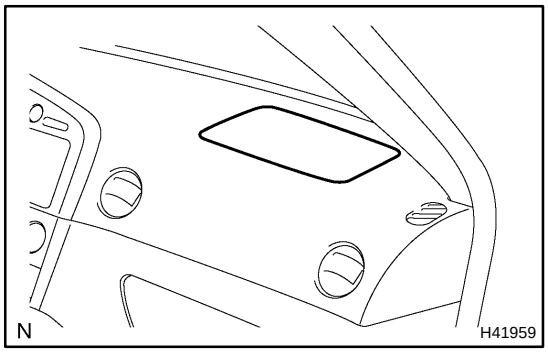

4. INSTRUMENT PANEL PASSENGER AIRBAG ASSY(VEHICLE NOT INVOLVED IN COLLISION)

(a) Do a diagnostic system check (See page 05–543).

(b) Do a visual check which includes the following item with the instrument panel passenger airbag assy installed in the vehicle.

Check cuts, minute cracks or marked discoloration on the instrument panel passenger airbag assy and instrument panel.

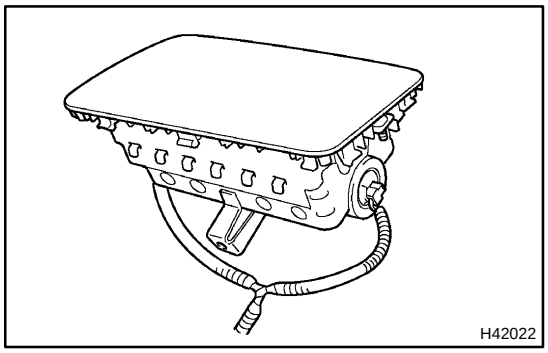

5. INSTRUMENT PANEL PASSENGER AIRBAG ASSY(VEHICLE INVOLVED IN COLLISION AND AIRBAG IS NOT DEPLOYED)

(a) Do a diagnostic system check (See page 05–543).

(b) Do a visual check which includes the following items with the instrument panel passenger airbag assy removed from the vehicle.

- Check cuts, minute cracks or marked discoloration on the instrument panel passenger airbag assy.
- Check cuts and cracks in wire harness, and for chipping in connectors.
- Check the deformation or cracks on the instrument panel and instrument panel reinforcement.

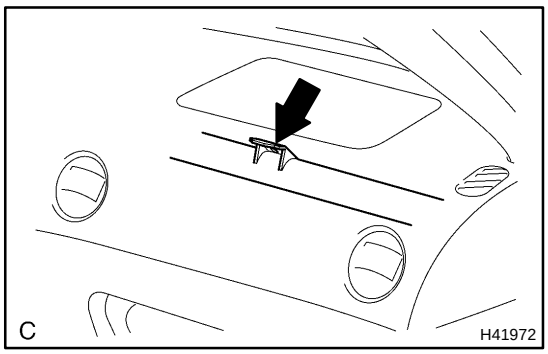

HINT:

If the instrument panel or instrument panel reinforcement is deformed or cracked, never repair it. Always replace it with a new one.

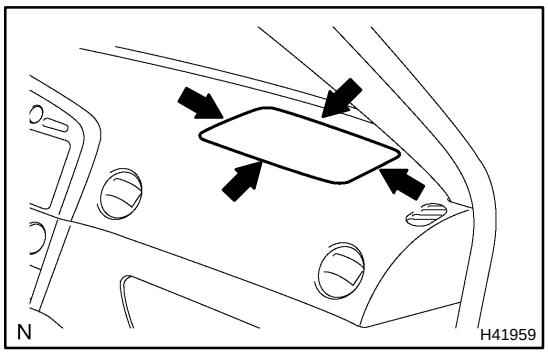

CAUTION:
For removal and installation of the instrument panel passenger airbag assy, see page 60–25, and be sure to follow the correct procedure.

6. INSTRUMENT PANEL PASSENGER AIRBAG ASSY(VEHICLE INVOLVED IN COLLISION AND AIRBAG IS DEPLOYED)

(a) Do a diagnostic system check (See page 05–543).

(b) Do a visual check which includes the following items with the instrument panel passenger airbag assy removed from the vehicle.

- Check the deformation or cracks on the instrument panel and instrument panel reinforcement.
- Check the damage on the connector and wire harness.

HINT:

If the instrument panel or instrument panel reinforcement is deformed or cracked, never repair it. Always replace it with a new one.

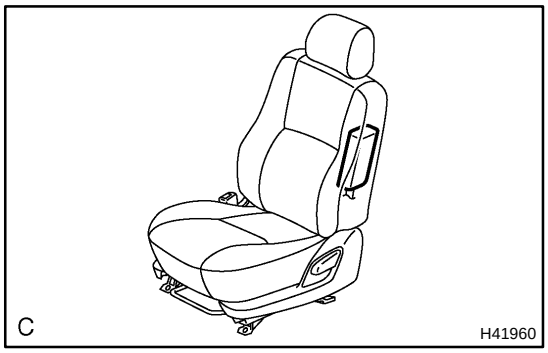

7. FRONT SEAT AIRBAG ASSY(VEHICLE NOT INVOLVED IN COLLISION)

(a) Do a diagnostic system check (See page 05–543).

(b) Do a visual check which includes the following item with the front seat airbag assy installed in the vehicle.

- Check cuts and cracks of the front seat airbag assy.
- Check cuts and cracks in wire harness, and for chipping in connectors.

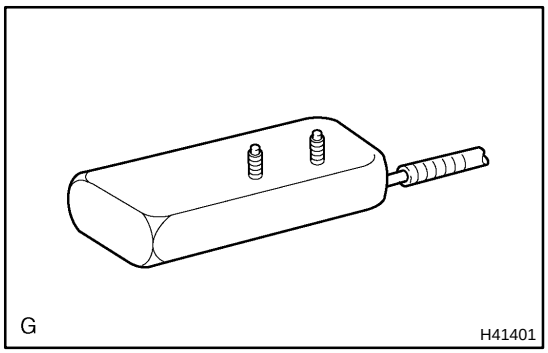

8. FRONT SEAT AIRBAG ASSY(VEHICLE INVOLVED IN COLLISION AND AIRBAG IS NOT DEPLOYED)

(a) Do a diagnostic system check (See page 05–543).

(b) Do a visual check which includes the following items with the front seat airbag assy removed from the vehicle.

- Check cuts, minute cracks or marked discoloration on the front seat airbag assy.
- Check cuts and cracks in wire harness, and for chipping in connectors.

9. AIRBAG SENSOR ASSY CENTER(VEHICLE NOT INVOLVED IN COLLISION)

(a) Do a diagnostic system check (See page 05–543).

10. AIRBAG SENSOR ASSY CENTER(VEHICLE INVOLVED IN COLLISION AND AIRBAG IS NOT DEPLOYED)

(a) Do a diagnostic system check (See page 05–543).

11. AIRBAG SENSOR ASSY CENTER(VEHICLE INVOLVED IN COLLISION AND AIRBAG IS DEPLOYED)

(a) Replace the airbag sensor assy center (See page 60–39).

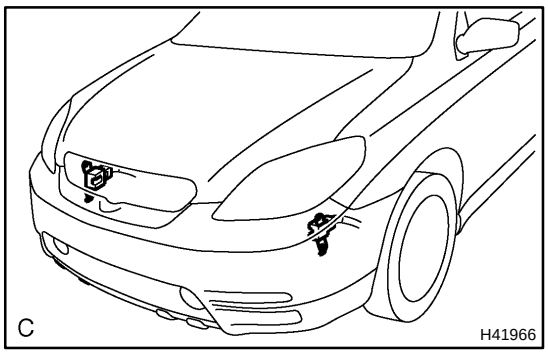

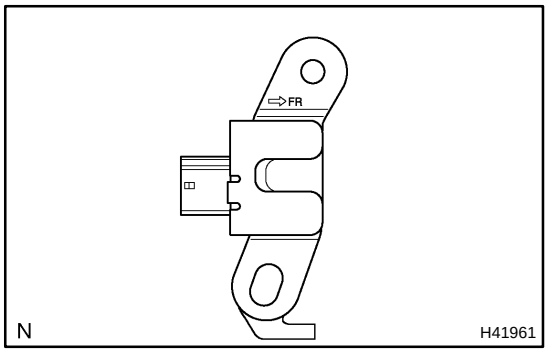

12. AIRBAG FRONT SENSOR(VEHICLE NOT INVOLVED IN COLLISION)

(a) Do a diagnostic system check (See page 05–543).

13. AIRBAG FRONT SENSOR(VEHICLE INVOLVED IN COLLISION)

(a) Do a diagnostic system check (See page 05–543).

(b) If the front fender of the car or its periphery is damaged, do a visual check for damage to the front airbag sensor, which includes the following items even if the airbag was not deployed:

- Bracket deformation
- Paint peeling off the bracket
- Cracks, dents or chips in the case
- Cracks, dents, chipping and scratches in the connector
- Peeling off of the label or damage to the serial number

14. SIDE AIRBAG SENSOR ASSY(VEHICLE NOT INVOLVED IN COLLISION)

(a) Do a diagnostic system check (See page 05–543).

15. SIDE AIRBAG SENSOR ASSY(VEHICLE INVOLVED IN COLLISION AND AIRBAG IS NOT DEPLOYED)

(a) Do a diagnostic system check (See page 05–543).

16. SIDE AIRBAG SENSOR ASSY(VEHICLE INVOLVED IN COLLISION AND AIRBAG IS DEPLOYED)

(a) Replace the front seat airbag assy and side airbag sensor assy (See page 60–45).

17. SEAT POSITION SENSOR(VEHICLES NOT INVOLVED IN COLLISION)

(a) Do a diagnostic system check (See page 05–543).

18. SEAT POSITION SENSOR(VEHICLE INVOLVED IN COLLISION)

(a) Do a diagnostic system check (See page 05–543).

(b) Do a visual check for damage to the airbag front sensor, which includes the following items even if the airbag was not deployed:

- Cracks, dents or chips in the case
- Cracks, dents, chipping and scratches in the connector

19. WIRE HARNESS AND CONNECTOR(VEHICLE NOT INVOLVED IN COLLISION)

(a) Do a diagnostic system check (See page 05–543).

20. WIRE HARNESS AND CONNECTOR(VEHICLE INVOLVED IN COLLISION)

(a) Do a diagnostic system check (See page 05–543).

(b) Check breaks in all wires of the SRS wire harness, and exposed conductors.

(c) Check to see if the SRS wire harness connectors are cracked or chipped.

HINT:

The SRS wire harness is integrated with the instrument panel wire harness assembly. All the connectors in the system are a standard yellow color.

SUPPLEMENTAL RESTRAINT SYSTEM

600C6–01

PRECAUTION

CAUTION:

- **The COROLLA MATRIX is equipped with SRS, which comprises a driver airbag, front passenger airbag, and side airbag. Failure to carry out service operations in the correct sequence could cause the SRS to unexpectedly deploy during servicing, possibly leading to a serious accident. Further, if a mistake is made in servicing the SRS, it is possible that the SRS may fail to operate when required. Before performing servicing (including removal or installation of parts, inspection or replacement), be sure to read the following items carefully, then follow the correct procedures described in the repair manual.**
- **Work must be started 90 seconds after the ignition switch is turned to the "LOCK" position and the negative (–) terminal cable is disconnected from the battery.**
  (The SRS is equipped with a back–up power source so that if work is started within 90 seconds from disconnecting the negative (–) terminal cable of the battery, the SRS may be deployed.)
- **Do not expose the horn button assy, instrument panel passenger airbag assy, airbag sensor assy center, airbag front sensor, front seat airbag assy, side airbag sensor assy or seat position airbag sensor directly to hot air or flames.**

NOTICE:

- **Malfunction symptoms of the SRS are difficult to confirm, so the DTCs become the most important source of information when troubleshooting. When troubleshooting the SRS, always inspect the DTCs before disconnecting the battery.**
- **Even in cases of a minor collision where the SRS does not deploy, the horn button assy, instrument panel passenger airbag assy, airbag sensor assy center, airbag front sensor, front seat airbag assy, side airbag sensor assy and seat position airbag sensor should be inspected (See page 60–8).**
- **Before repairs, remove the airbag sensor if shocks are likely to be applied to the sensor during repairs.**
- **Never use SRS parts from another vehicle. When replacing parts, replace them with new parts.**
- **Never disassemble and repair the horn button assy, instrument panel passenger airbag assy, airbag sensor assy center, airbag front sensor, front seat airbag assy, side airbag sensor assy or seat position airbag sensor in order to reuse it.**
- **If the horn button assy, instrument panel passenger airbag assy, airbag sensor assy center, airbag front sensor, front seat airbag assy, side airbag sensor assy or seat position airbag sensor has been dropped, or if there are cracks, dents or other defects in the case, bracket or connector, replace it with new one.**
- **Use a volt/ohmmeter with high impedance (10 kΩ/V minimum) for troubleshooting the system's electrical circuits.**
- **Information labels are attached to the periphery of the SRS components. Follow the instructions on the notices.**
- **After work on the SRS is completed, perform the SRS warning light check (See page 05–543).**
- **When the negative (–) terminal cable is disconnected from the battery, the memory of the clock and audio system will be canceled. So before starting work, make a record of the contents memorized in the audio memory system. When work is finished, reset the audio systems as they were before and adjust the clock. To avoid erasing the memory in each memory system, never use a back– up power supply from outside the vehicle.**
- **If the vehicle is equipped with a mobile communication system, refer to the precaution in the IN section.**

1. SRS CONNECTORS

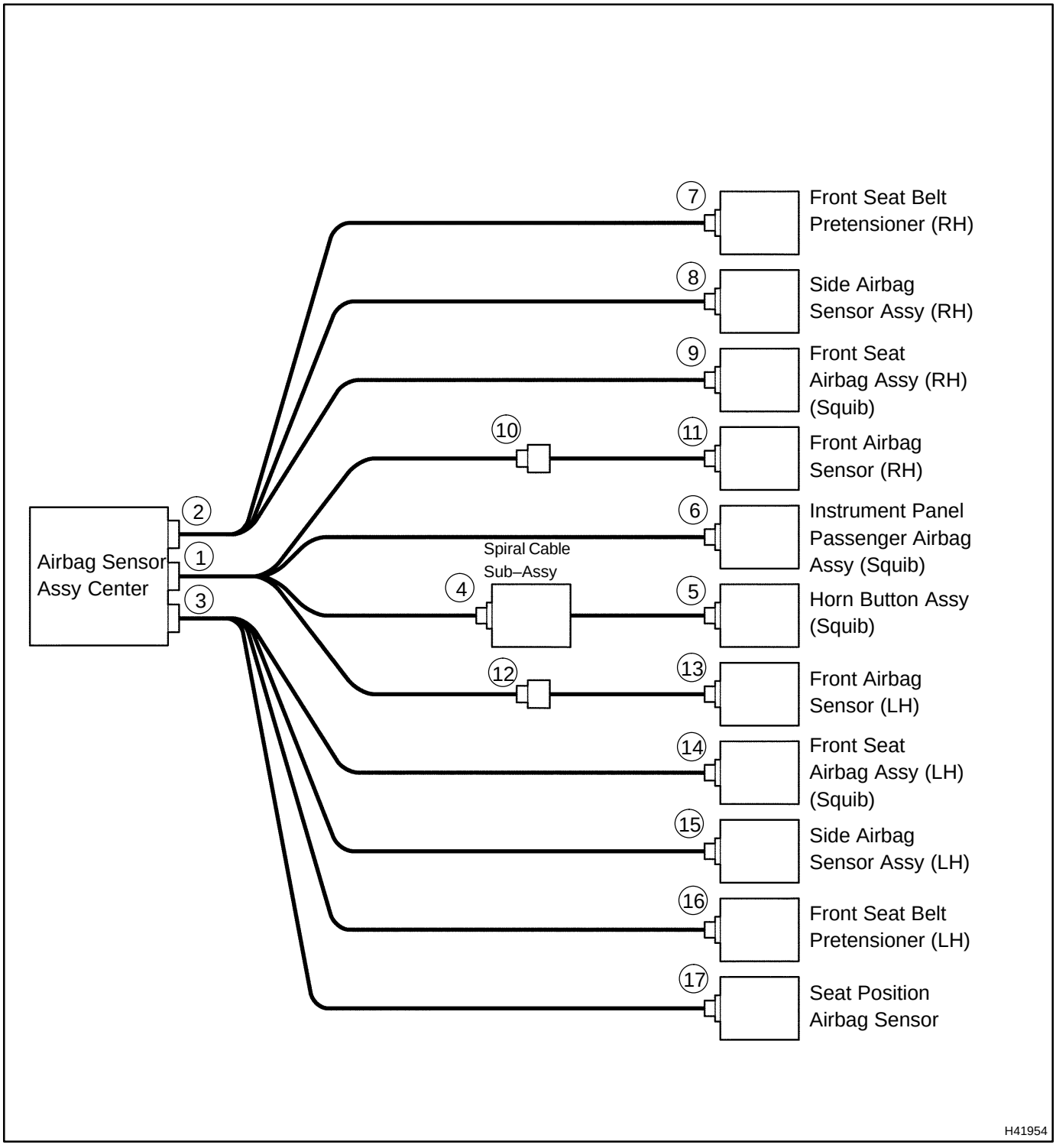

No.	Item	Application
(1)	Terminal Twin–Lock Mechanism	Connectors 1, 2, 3, 4, 6, 8, 9, 10, 11, 12, 13, 14, 15, 17
(2)	Airbag Activation Prevention Mechanism	Connectors 1, 2, 3, 4, 5, 6, 7, 9, 14, 16
(3)	Electrical Connection Check Mechanism	Connectors 1, 2, 3
(4)	Harf Connection Prevention Mechanism	Connectors 8, 9, 10, 11, 12, 13, 14, 15
(5)	Connector Lock Mechanism	Connectors 5, 7, 16

(a) All connectors in the SRS are colored in yellow to distinguish them from other connectors. Connectors having special functions and specifically designed for the SRS are used in the locations shown on the previous page to ensure high reliability. These connectors use durable gold–plated terminals.

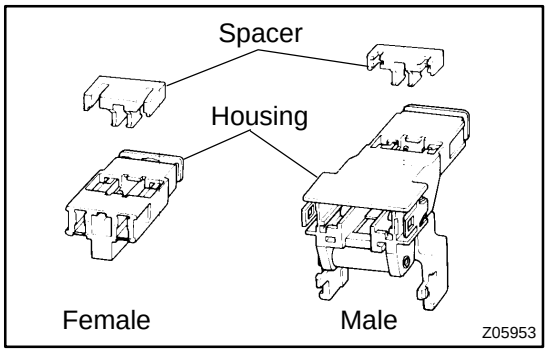

(1) Terminal twin–lock mechanism:
Each connector has a two–piece component consisting of a housing and a spacer. This design enables the terminal to be locked securely by two locking devices (the retainer and the lance) to prevent terminals from coming out.

(2) Airbag activation prevention mechanism:
Each connector contains a short spring plate. When the connector is disconnected, the short spring plate automatically connects positive (+) terminal and negative (–) terminal of the squib.

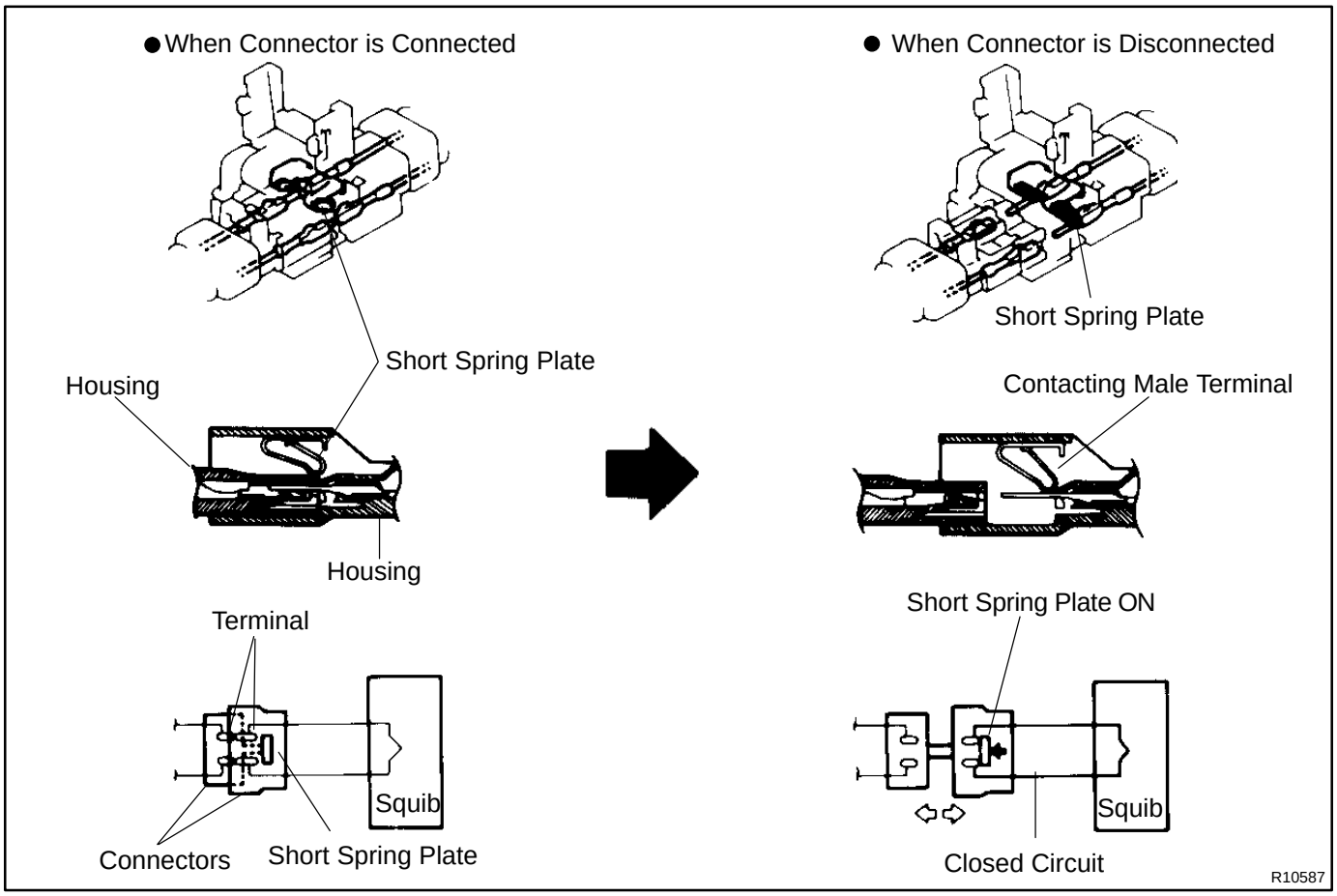

HINT:
The type of connector is shown in the diagram on the previous page.

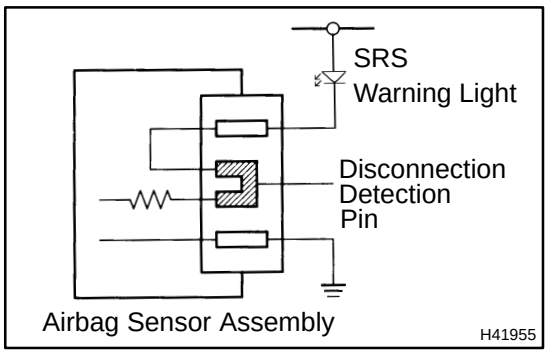

(3) Electrical connection check mechanism:
This mechanism electrically checks that connectors are connected correctly and completely. The electrical connection check mechanism is designed so that the disconnection detection pin connects with the diagnosis terminals when the connector housing lock is locked.

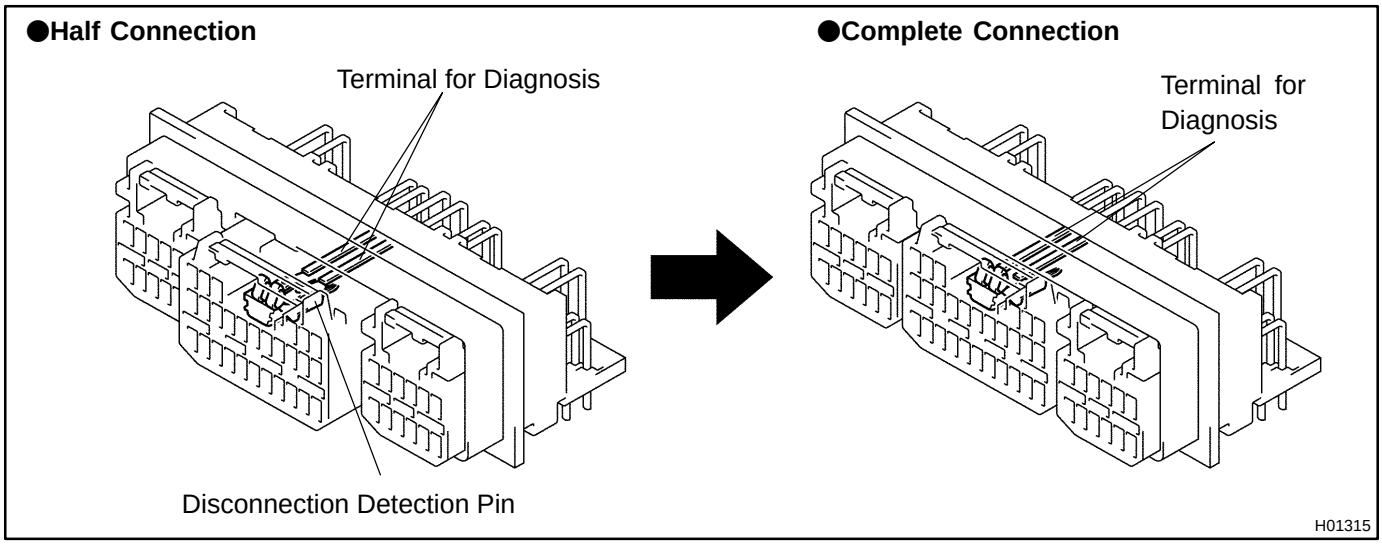

HINT:
The connectors shown in this illustration are connectors, ”1”, ”2” and ”3” in step 1.

(4) Harf connection prevention mechanism:
If the connector is not completely connected, the connector is disconnected due to the spring operation to the extent that no continuity exists.

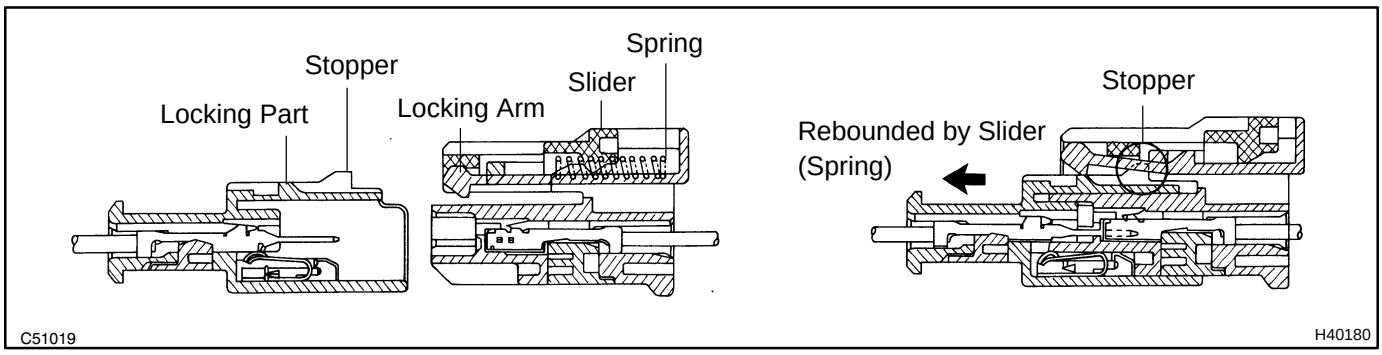

(5) Connector lock mechanism:
Locking the connector lock button securely connects the connector.

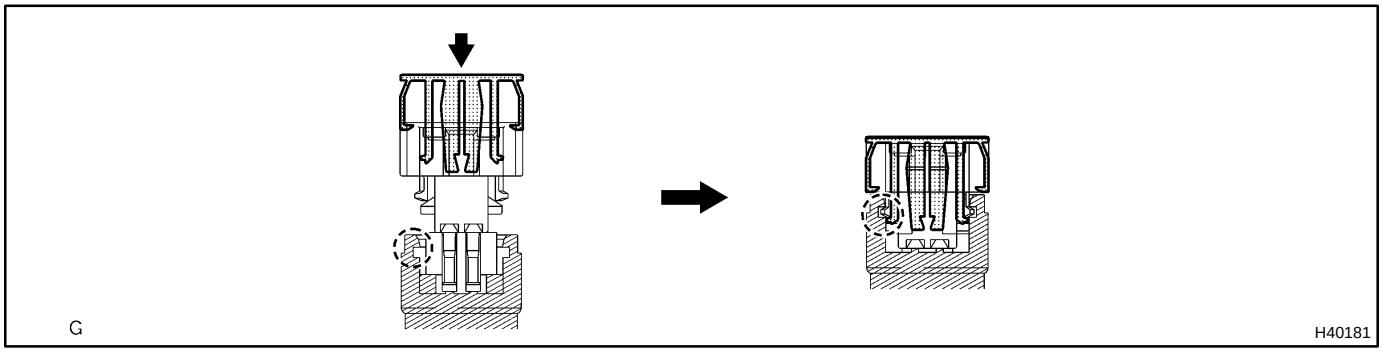

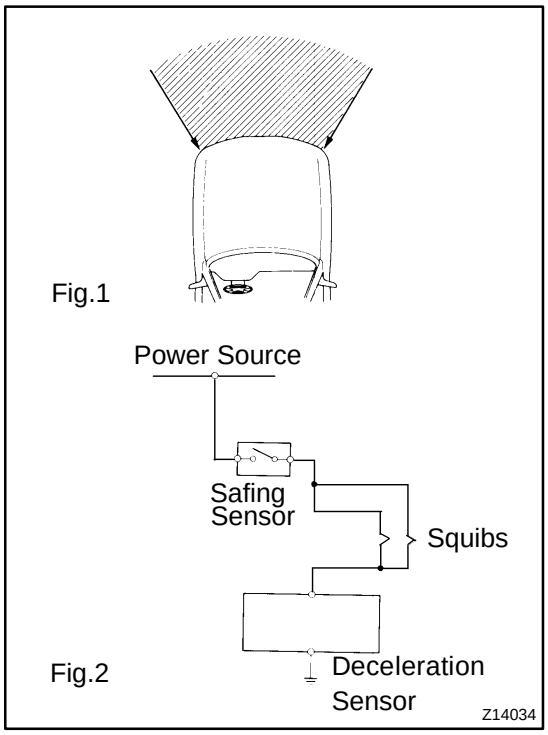

(b) When the vehicle is involved in a frontal collision in the hatched area (Fig. 1) and the shock is larger than the predetermined level, the SRS is activated automatically. A safing sensor is designed to go on at a smaller deceleration rate than the airbag sensor. As illustrated in Fig. 2, ignition is caused when current flows to the squib, which happens when a safing sensor and the deceleration sensor go on simultaneously. When a deceleration force acts on the sensors, 2 squibs in the driver airbag and front passenger airbag ignite and generate gas. The gas discharging into the driver airbag and front passenger airbag rapidly increases the pressure inside the bags, breaking open the horn button assy and instrument panel. Bag inflation then ends, and the bags deflate as the gas is discharged through discharge holes at the bag's rear or side.

2. DISCONNECTION OF CONNECTOR FRONT SEAT AIRBAG ASSY

(a) Place a finger on the slider.
(b) Slide the slider to release lock.
(c) Disconnect the connector.

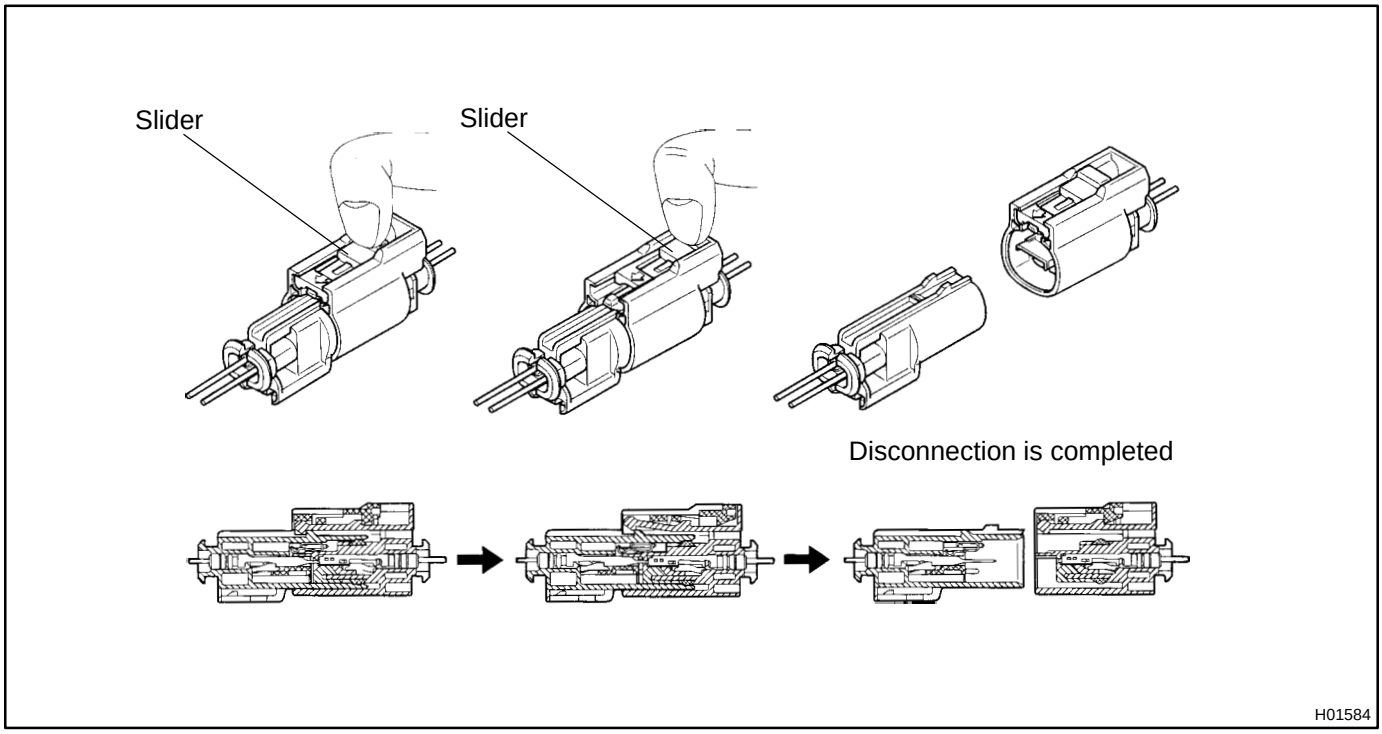

3. CONNECTION OF CONNECTOR FOR FRONT SEAT AIRBAG ASSY

(a) Align a lock part of male connector and a slider of female connector in the same direction as shown in the illustration, fit in them without rubbing.
(b) Be sure to insert until they are locked. After fitting in pull them slightly to check that they are locked. (When locked, make sure that the outer returns to its original position and sound at the time of fitting in can be heard.)

HINT:

- As the slider slides, do not touch it.
- Be careful not to deform the release board. If the release board is deformed, replace it with a new one.

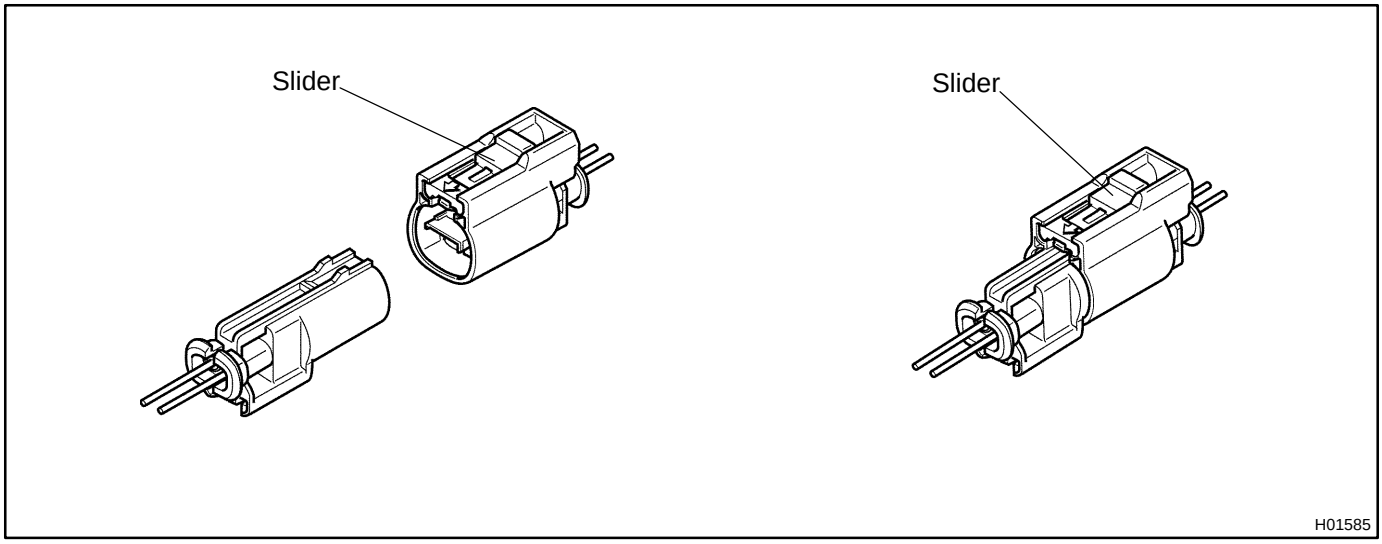

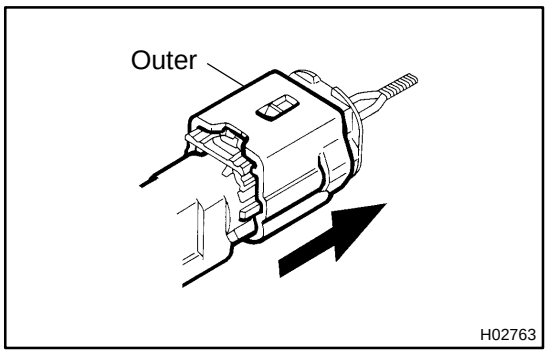

4. DISCONNECTION OF AIRBAG FRONT SENSOR AND SIDE AIRBAG SENSOR CONNECTOR

(a) While holding both flank sides of the outer, slide the outer to the direction shown by an arrow.

(b) Lock of the connectors is released, then disconnect the connectors.

HINT:

Be sure to hold both flank sides of the outer. If holding the top and bottom sides, it will obstruct disconnection.

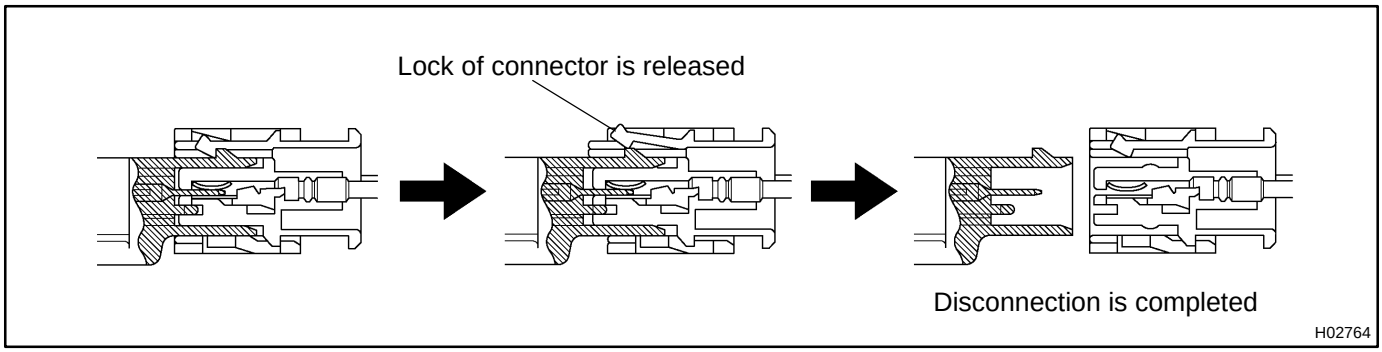

5. CONNECTION OF CONNECTORS FOR AIRBAG FRONT SENSOR AND SIDE AIRBAG SENSOR

(a) Align the male connector (on the side of sensor) and female connector in the same direction as shown in the illustration and fit in them without rubbing.

(b) As they are fitted in, the outer slides rearward. Press it until the outer returns to its original position again.

If fitting stops half way, connectors will separate.

(c) Be sure to insert until they are locked. After fitting in, pull them slightly to check that they are locked. (When locked, make sure that the outer returns to its original position and sound at the time of fitting in can be heard.)

HINT:

- Do not fit in while holding the outer.
- When fitting in, the outer slides. Do not touch it.

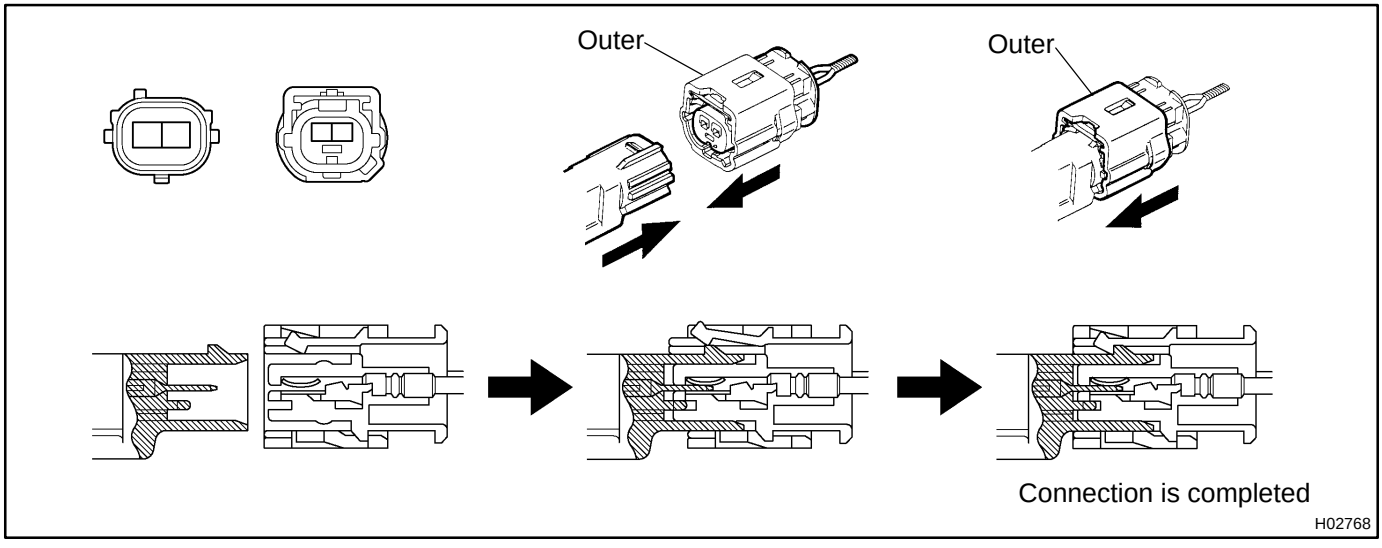

HORN BUTTON ASSY

COMPONENTS

600CK–01

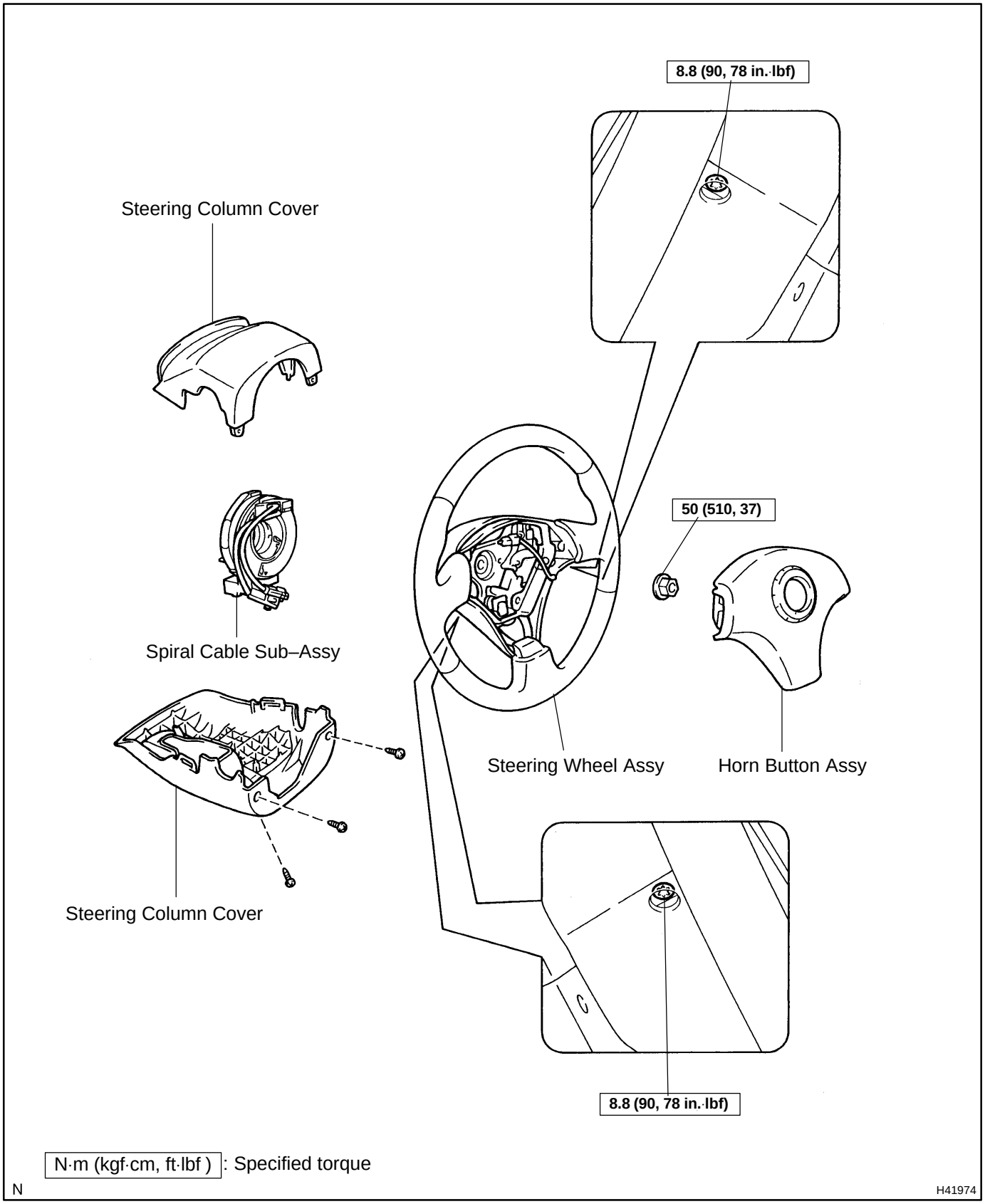

600CM–01

DISPOSAL

HINT:

When scrapping vehicle equipped with an SRS or disposing of a horn button assy, always first deploy the airbag in accordance with the procedure described below. If any abnormality occurs with the airbag deployment, contact the SERVICE DEPT. of TOYOTA MOTOR SALES, U.S.A., INC.

CAUTION:

- **Never dispose of a horn button assy, which has an undeployed airbag.**
- **The airbag produces a sizeable exploding sound when it deploys, so perform the operation out–of–doors and where it will not create a nuisance to nearby residents.**

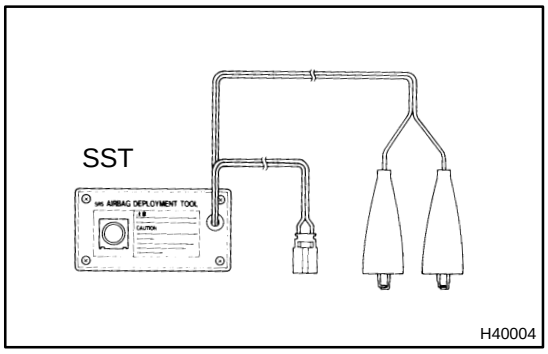

- **When deploying the airbag, always use the specified SST (SRS Airbag Deployment Tool). Perform the operation in a place away from electrical noise.**
- **When deploying an airbag, perform the operation at least 10 m (33 ft) away from the horn button assy.**
- **The horn button assy is very hot when the airbag is deployed, so leave it alone for at least 30 minutes after deployment.**
- **Use gloves and safety glasses when handling a horn button assy with the deployed airbag.**
- **Always wash your hands with water after completing the operation.**
- **Do not apply water, etc. to a horn button assy with the deployed airbag.**

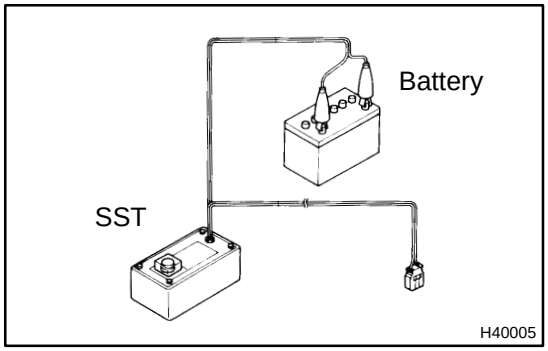

1. DISPOSE HORN BUTTON ASSY (WHEN SCRAPPING VEHICLE DEPLOYMENT METHOD)

HINT:

Have a battery ready as the power source to deploy the airbag.

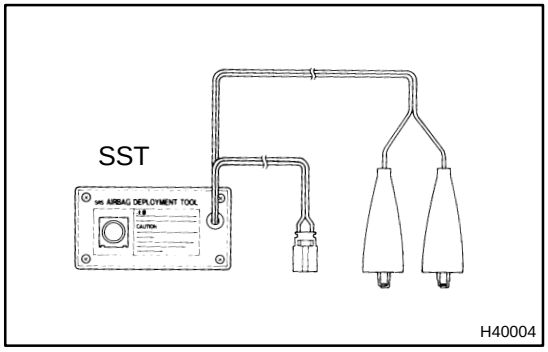

(a) Check functioning of the SST.

CAUTION:

When deploying the airbag, always use the specified SST: SRS Airbag Deployment Tool.

SST 09082–00700

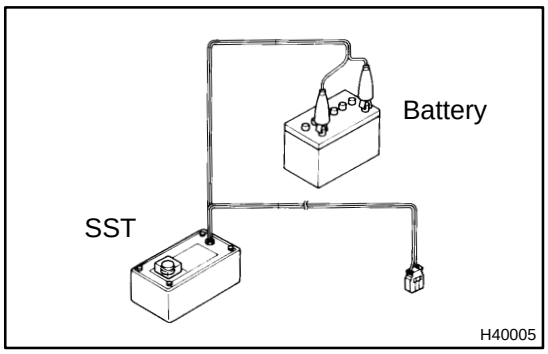

(1) Connect the SST to the battery.
Connect the red clip of the SST to the battery positive (+) terminal and the black clip to the battery negative (–) terminal.

HINT:
Do not connect the yellow connector which will be connected with the supplemental restraint system.

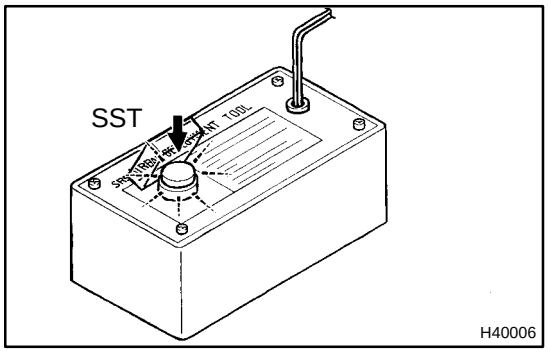

(2) Check functioning of the SST.
Press the SST activation switch, and check that the LED of the SST activation switch lights up.

CAUTION:
If the LED lights up when the activation switch is not being pressed, SST malfunction is probable, so definitely do not use the SST.

(3) Disconnect the SST from the battery.

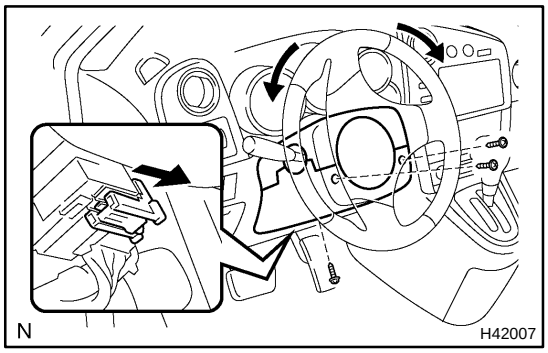

(b) Install the SST.

CAUTION:
Check that there is no looseness in the steering wheel and horn button assy.

(1) While turning the steering wheel right / left, remove the 3 screws and steering column cover.

(2) Disconnect the airbag connector of the spiral cable.

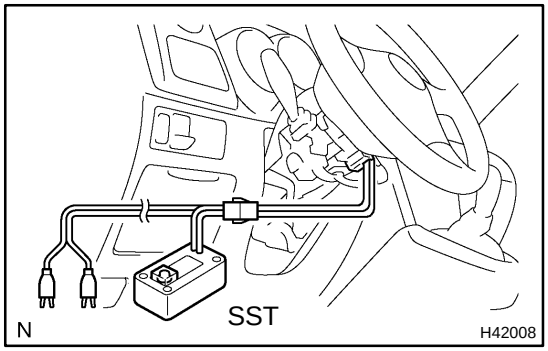

(3) Connect the connectors of the 2 SST to the airbag connector of the spiral cable back side.
SST 09082–00700, 09082–00780

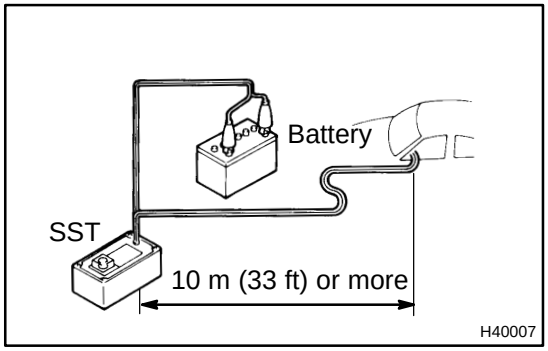

(4) Move the SST at least 10 m (33 ft) away from the front of the vehicle.

(5) Close all the doors and windows of the vehicle.

NOTICE:
Take care not to damage the SST wire harness.

(6) Connect the red clip of the SST to the battery positive (+) terminal and the black clip to the negative (–) terminal.

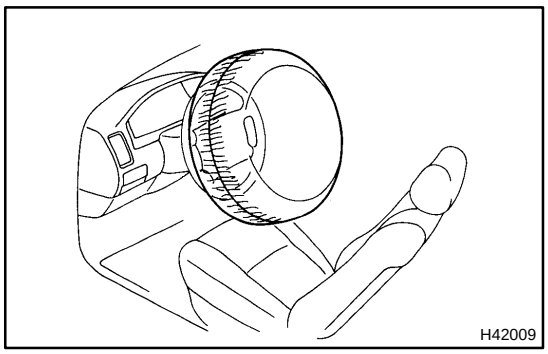
H42009

(c) Deploy the airbag.
(1) Confirm that no one is inside the vehicle or within 10 m (33 ft) area around the vehicle.
(2) Press the SST activation switch and deploy the airbag.

HINT:
The airbag deploys simultaneously as the LED of the SST activation switch lights up.

(d) Dispose the horn button assy (with airbag).

CAUTION:
- **The horn button assy is very hot when the airbag is deployed, so leave it alone for at least 30 minutes after deployment.**
- **When moving a vehicle for scrapping which has a horn button assy with deployed airbag, use gloves and safety glasses.**
- **Use gloves and safety glasses when handling a horn button assy with the deployed airbag.**
- **Always wash your hands with water after completing the operation.**
- **Do not apply water, etc. to a horn button assy with the deployed airbag.**

HINT:
When scrapping a vehicle, deploy the airbag and scrap the vehicle with the horn button assy still installed.

2. DISPOSE HORN BUTTON ASSY (WHEN DISPOSING OF AIRBAG ASSEMBLY DEPLOYMENT METHOD)

NOTICE:
- **When disposing of the horn button assy (with airbag) only, never use the customers vehicle to deploy the airbag.**
- **Be sure to follow the procedure given below when deploying the airbag.**

HINT:
Have a battery ready as the power source to deploy the airbag.

(a) Remove the horn button assy (See page 60–13).

CAUTION:
When storing the horn button assy, keep the upper surface of the pad facing upward.

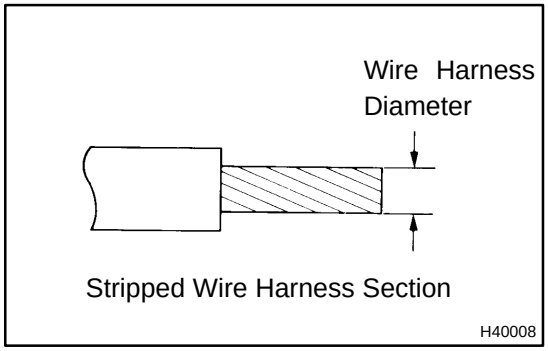

H40008

(b) Using a service–purpose wire harness, tie down the horn button assy to the disc wheel.
Wire harness: Stripped wire harness section 1.25 mm^2 or more (0.0019 in^2. or more)

CAUTION:
If a wire harness which is too thin or some other thing is used to tie down the horn button assy, it may be snapped by the shock when the airbag is deployed. This is highly dangerous. Always use a wire harness for vehicle use which is at least 1.25 mm^2 (0.0019 in^2).

HINT:
To calculate the square of the stripped wire harness section:
Square = 3.14 x (Diameter)^2 divided by 4

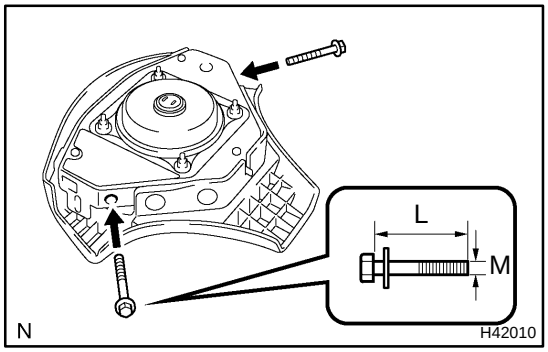

(1) Install the 2 bolts with washers in the 2 bolt holes in the horn button assy.

Bolt:
L: 35.0 mm (1.378 in.)
M: 6.0 mm (0.236 in.)
Pitch: 1.0 mm (0.039 in.)

NOTICE:

- **Tighten the bolts by hand until the bolts become difficult to turn.**
- **Do not tighten the bolts too much.**

(2) Connect the connectors of the SST to the horn button assy connectors.

SST 09082–00801 (09082–10801, 09082–30801)

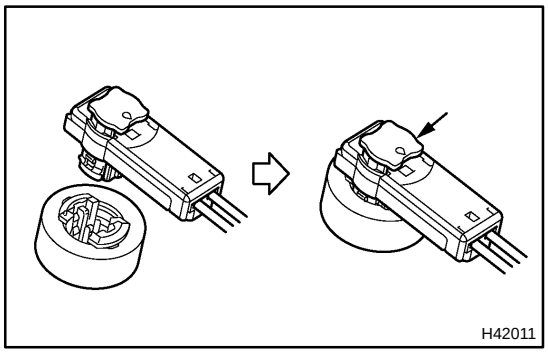

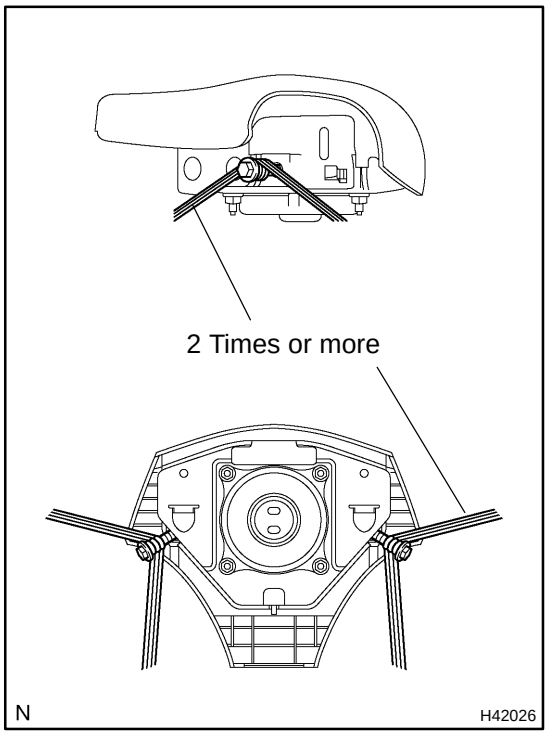

(3) Using 3 wire harness, wind the wire harness at least 2 times each around the bolts installed on the left and right sides of the horn button assy.

CAUTION:

- **Tightly wind the wire harness around the bolts so that there is no slack.**
- **If there is slack in the wire harness, the horn button assy may come loose due to the shock when the airbag is deployed. This is highly dangerous.**

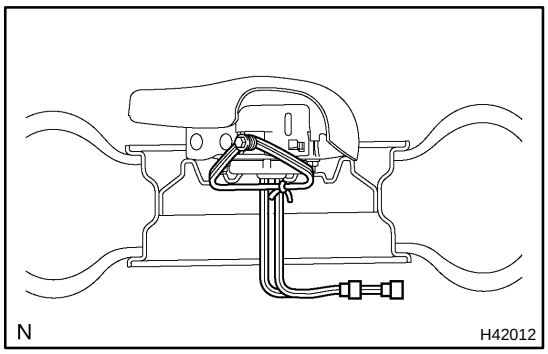

(4) Face the upper surface of the horn button assy upward. Separately tie the left and right sides of the horn button assy to the disc wheel through the hub nut holes. Position the horn button assy connector so that it hangs downward through a hub hole in the disc wheel.

CAUTION:

- **Make sure that the wire harness is tight. It is very dangerous when looseness in the wire harness results in the steering wheel pad coming free through the shock from the airbag deploying.**
- **Always tie down the horn button assy with the pad side facing upward. It is very dangerous if the horn button assy is tied down with the metal surface facing upward as the wire harness will be cut by the shock from the airbag deploying and the horn button assy will be thrown into the air.**

NOTICE:

The disc wheel will be marked by airbag deployment, so when disposing of the airbag use a redundant disc wheel.

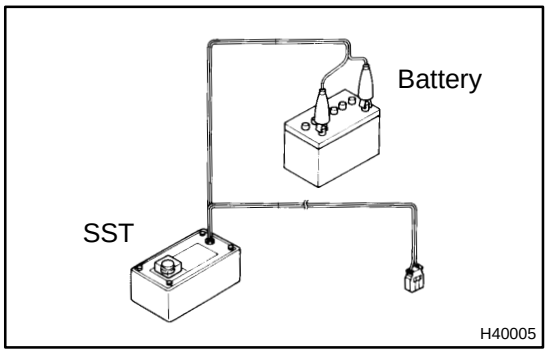

(c) Check functioning of the SST (See step 1–(a)).

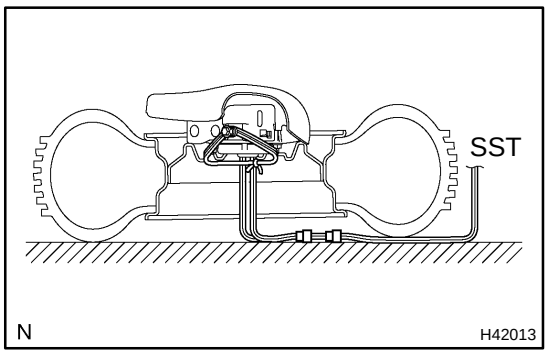

(d) Install the SST.

CAUTION:

Place the disc wheel on the level ground.

(1) Connect the connector of the SST to the horn button assy connector.

SST 09082–00700

NOTICE:

To avoid damaging the SST connector and wire harness, do not lock the secondary lock of the twin lock. Also, secure some slack for the SST wire harness inside the disc wheel.

(2) Move the SST to at least 10 m (33 ft) away from the horn button assy tied down on the disc wheel.

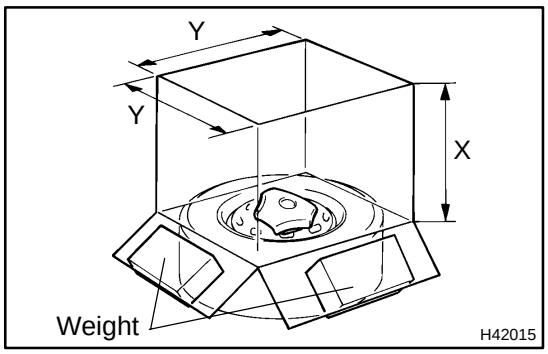

(e) Cover the horn button assy with a cardboard box or tires.

- Covering method using a cardboard box:
  Cover the horn button assy with the cardboard box and weight the cardboard box down in 4 places with at least 190 N (20 kg, 44 lb).

Size of cardboard box:
Must exceed the following dimensions:
X = 460 mm (18.11 in.)
Y = 650 mm (25.59 in.)

NOTICE:

- **When dimension Y of the cardboard box exceeds the diameter of the disc wheel with tire to which the horn button assy is tied, X should be the following size.**
  X = 460 mm (18.11 in.) + width of tire
- **If a cardboard box smaller than the specified size is used, the cardboard box will be broken by the shock from the airbag deployment.**

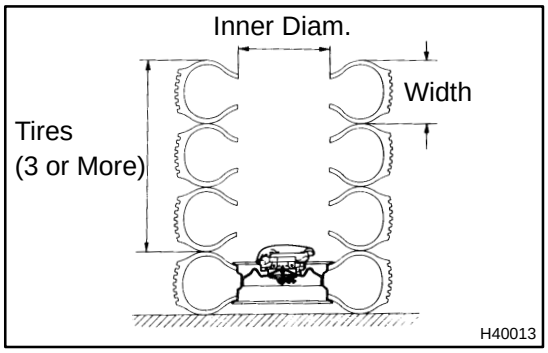

- Covering method using tires:
  Place at least 3 tires without disc wheel on top of the disc wheel with tire to which the horn button assy is tied.

Tire size: Must exceed the following dimensions–
Width: 185 mm (7.28 in.)
Inner diameter: 360 mm (14.17 in.)

CAUTION:
Do not use tires with disc wheels.

NOTICE:
The tires may be marked by the airbag deployment, so use the redundant tires.

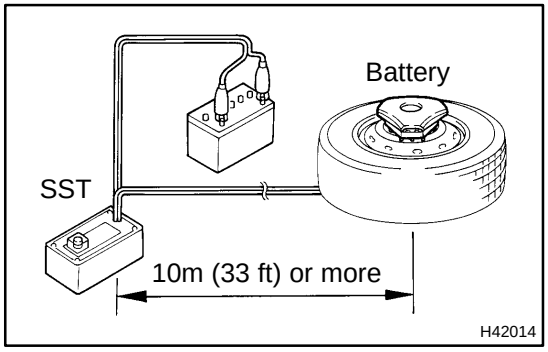

(f) Deploy the airbag.

(1) Connect the SST red clip to the battery positive (+) terminal and the black clip to the battery negative (–) terminal.
(2) Check that no one is within 10 m (33 ft) area around the disc wheel which the horn button assy is tied to.
(3) Press the SST activation switch and deploy the airbag.

HINT:
The airbag deploys simultaneously as the LED of the SST activation switch lights up.

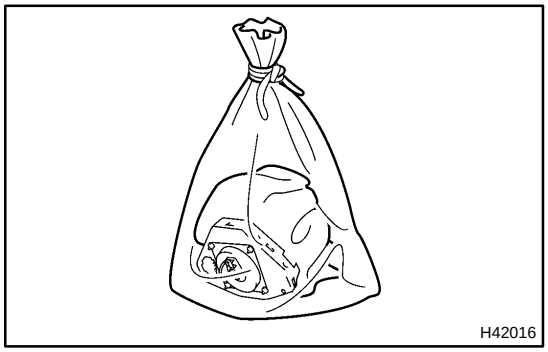

(g) Dispose the horn button assy (with airbag).

CAUTION:

- **The steering wheel pad is very hot when the airbag is deployed, so leave it alone for at least 30 minutes after deployment.**
- **Use gloves and safety glasses when handling a horn button assy with the deployed airbag.**
- **Always wash your hands with water after completing the operation.**
- **Do not apply water, etc. to a horn button assy with the deployed airbag.**

(1) Remove the horn button assy from the disc wheel.
(2) Place the horn button assy in a vinyl bag, tie the end tightly and dispose of it in the same way as other general parts disposal.

REPLACEMENT

HINT:

COMPONENTS: See page 60–12

1. PRECAUTION (See page 60–1)

2. SEPARATE BATTERY NEGATIVE TERMINAL (See page 60–1)

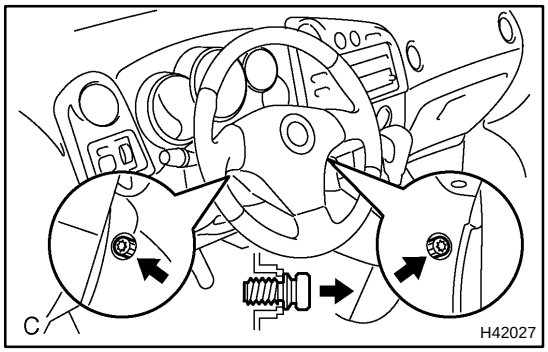

3. REMOVE HORN BUTTON ASSY

NOTICE:

If the airbag connector is disconnected with the ignition switch at ON or ACC, DTCs will be recorded.

(a) Place the front wheels facing straight ahead.

(b) Using a torx socket wrench (T30), loosen the 2 torx screws until the groove along the screw circumference catches on the screw case.

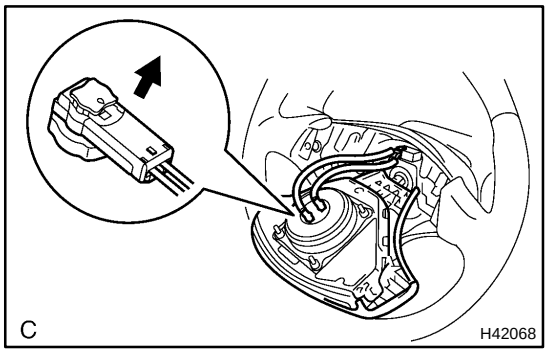

(c) Pull out the horn button assy from the steering wheel assy.

(d) Disconnect the airbag connectors and horn connector, and remove the horn button assy.

4. INSPECT HORN BUTTON ASSY (See page 60–8)

5. INSTALL HORN BUTTON ASSY

(a) Connect the airbag connectors and horn connector.

(b) Install the horn button assy after confirming that the circumference groove of the torx screws is caught on the screw case.

(c) Using a torx socket wrench(T30), install the 2 screws.

Torque: 8.8 N·m (90 kgf·cm, 78 in.·lbf)

6. INSPECT SRS WARNING LIGHT (See page 05–543)

SPIRAL CABLE SUB–ASSY

600CI–01

COMPONENTS

(See page 60–12)

600CJ–01

REPLACEMENT

HINT:

COMPONENTS: See page 60–21

1. PRECAUTION (See page 60–1)

2. SEPARATE BATTERY NEGATIVE TERMINAL (See page 60–1)

3. PLACE FRONT WHEELS FACING STRAIGHT AHEAD

4. REMOVE HORN BUTTON ASSY (See page 60–13)

5. REMOVE STEERING WHEEL ASSY (See page 50–6)

SST 09950–50013 (09951–05010, 09952–05010, 09953–05020, 09954–05021)

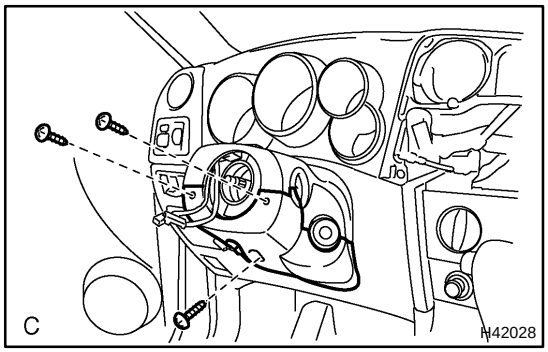

6. REMOVE STEERING COLUMN COVER

(a) Remove the 3 screws and steering column lower cover.

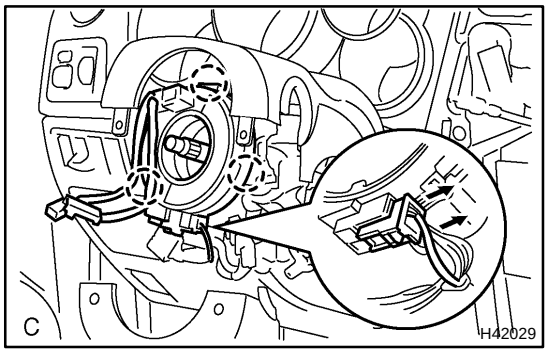

7. REMOVE SPIRAL CABLE SUB–ASSY

(a) Slide the steering column upper cover.

(b) Disconnect the airbag connector and connector from the spiral cable sub–assy.

(c) Release the 3 claws and remove the spiral cable sub–assy.

8. INSPECT SPIRAL CABLE SUB–ASSY

(a) Check that the front wheels are facing straight ahead.

9. PLACE FRONT WHEELS FACING STRAIGHT AHEAD

(a) Set the turn signal switch in neutral position.

10. INSTALL SPIRAL CABLE SUB–ASSY

(a) If the following condition is identified, replace the spiral cable sub–assy with new one.

NOTICE:

Make sure of the neutral position since the pin of the turn signal switch may be snapped.

(b) Engage the 3 claws and install the spiral cable sub–assy.

NOTICE:

When replacing the spiral cable sub–assy with new one, remove the lock pin before installing the handle.

(c) Connect the airbag connector and connector.

(d) Install the steering column upper cover.

Condition:

Scratches or cracks on the connector

Cracks, dents or chipping of the spiral cable sub–assy

11. INSTALL STEERING COLUMN COVER

(a) Install the steering column lower cover with the 3 screws.

12. CENTER SPIRAL CABLE

(a) Check that the ignition switch turn OFF.

(b) Check that the battery negative terminal is disconnected.

NOTICE:

Do not start the operation for 90 seconds after removing the terminal.

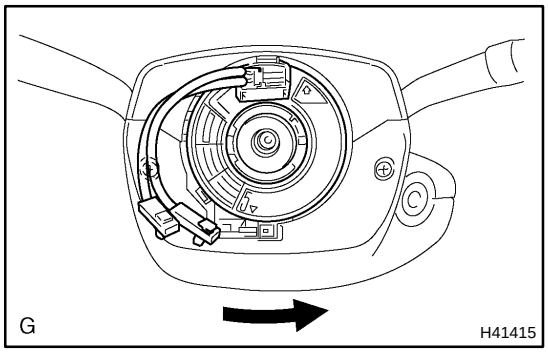

(c) Turn the cable counterclockwise by hand until it becomes harder to turn.

HINT:

The cable will rotate about 2.5 turns to either left or right of the center.

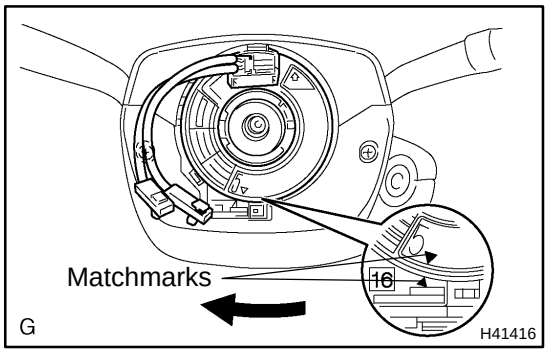

(d) Then rotate the cable clockwise about 2.5 turns to align the marks.

13. INSTALL STEERING WHEEL ASSY (See page 50–6)

14. INSTALL HORN BUTTON ASSY (See page 60–13)

15. INSPECT HORN BUTTON ASSY (See page 60–8)

16. INSPECT SRS WARNING LIGHT (See page 05–543)

AIR BAG SENSOR ASSY CENTER

600CD–01

COMPONENTS

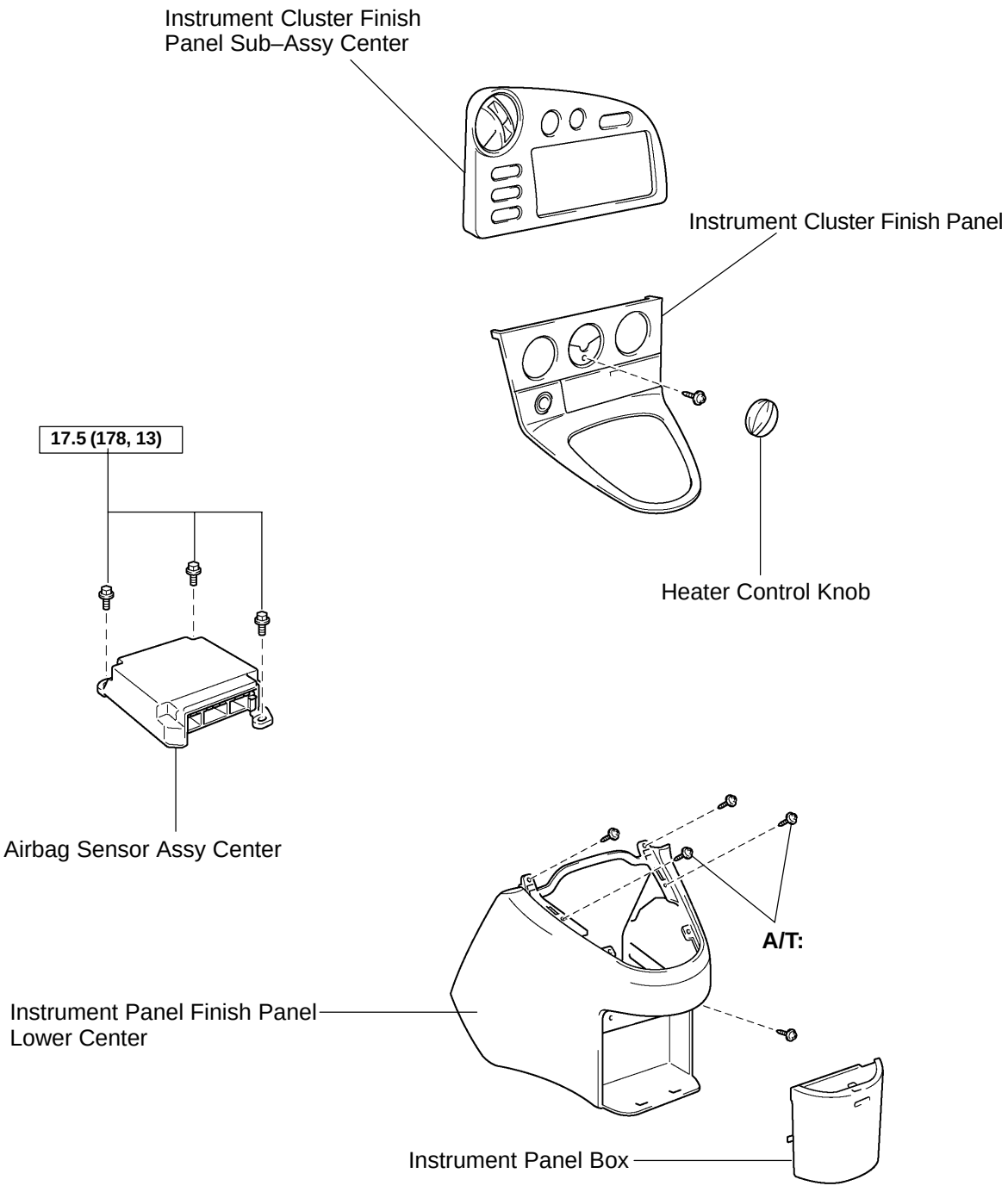

N N·m (kgf·cm, ft·lbf) : Specified torque

H41976

600CE–01

REPLACEMENT

HINT:

COMPONENTS: See page 60–38

1. PRECAUTION (See page 60–1)

2. SEPARATE BATTERY NEGATIVE TERMINAL (See page 60–1)

3. REMOVE INSTRUMENT CLUSTER FINISH PANEL SUB–ASSY CENTER

4. REMOVE HEATER CONTROL KNOB

5. REMOVE INSTRUMENT CLUSTER FINISH PANEL

6. REMOVE INSTRUMENT PANEL BOX

7. REMOVE INSTRUMENT PANEL FINISH PANEL LOWER CENTER

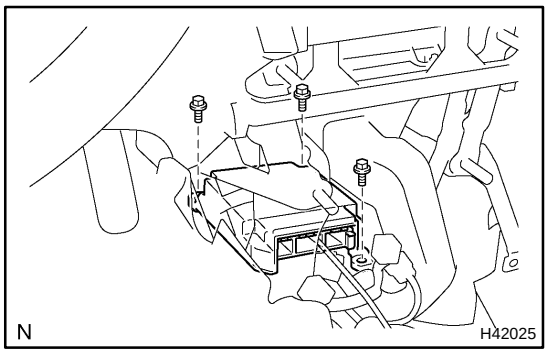

8. REMOVE AIR BAG SENSOR ASSY CENTER

(a) Disconnect the airbag sensor connectors.

NOTICE:

Remove the connector with the sensor assy installed.

(b) Remove the 3 bolts and the airbag sensor assy center.

9. INSPECT AIR BAG SENSOR ASSY CENTER (See page 60–8)

10. INSTALL AIR BAG SENSOR ASSY CENTER

(a) Check that the ignition switch turn OFF.

(b) Check that the battery negative (–) terminal is disconnected.

NOTICE:

Do not start the operation for 90 seconds after removing the terminal.

(c) Temporarily install the air bag sensor assy center with the 3 bolts.

(d) Tighten the 3 bolts to the specified torque.

Torque: 17.5 N·m (178 kgf·cm, 13 ft·lbf)

(e) Connect the connectors to the air bag sensor assy center.

(f) Check that no play is identified.

(g) Check that the water–proof sheet is properly set.

11. INSPECT SRS WARNING LIGHT (See Page 05–543)

FRONT SEAT AIRBAG ASSY RH

600C8–01

DISPOSAL

HINT:

When scrapping vehicles equipped with an SRS or disposing of the front seat airbag assy always first deploy the airbag in accordance with the procedure described below. If any abnormality occurs with the airbag deployment, contact the SERVICE DEPT. of TOYOTA MOTOR SALES, U.S.A., INC.

When disposing of a front seat airbag assy with an airbag deployed in a collision, follow the same procedure given in step 1–(e) in ”DISPOSAL”.

CAUTION:

- **Never dispose of a front seat airbag assy which has an undeployed airbag.**
- **The airbag produces a sizeable exploding sound when it deploys, so perform the operation out of doors and where it will not create a nuisance to nearby residents.**

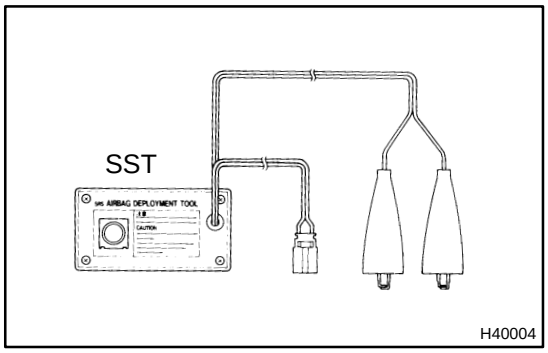

- **When deploying the airbag, always use the specified SST (SRS Airbag Deployment Tool), perform the operation in a place away from electrical noise.**
- **When deploying an airbag, perform the operation at least 10 m (33 ft) away from the airbag assembly.**
- **The front seat airbag assy is very hot when the airbag is deployed, so leave it alone for at least 30 minutes after deployment.**
- **Use gloves and safety glasses when handling front seat airbag assy with the deployed airbag.**
- **Always wash your hands with water after completing the operation.**
- **Do not apply water, etc. to a front seat airbag assy with the deployed airbag.**

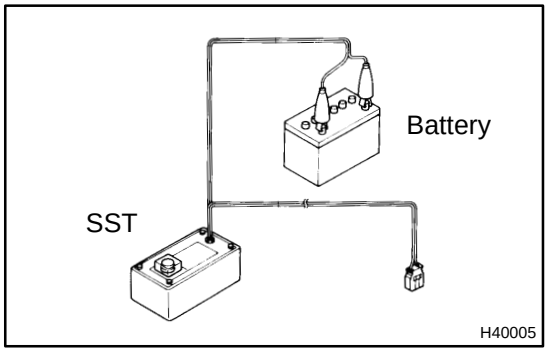

1. DISPOSE FRONT SEAT AIRBAG ASSY RH(WHEN SCRAPPING VEHICLE DEPLOYMENT METHOD)

HINT:

Have a battery ready as the power source to deploy the airbag.

(a) Check functioning of the SST (See step 1–(a) on page 60–14).

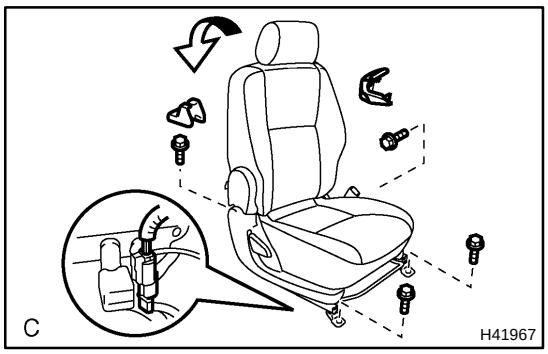

(b) Disconnect the side airbag connector.

NOTICE:

When handling the airbag connector, take care not to damage the airbag wire harness.

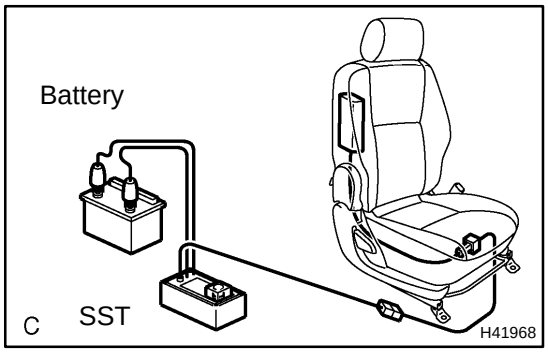

(c) Install the SST.

(1) Connect the 2 SST connector to the airbag connector.

SST 09082–00700, 09082–00750

NOTICE:

To avoid damaging the SST connector and wire harness, do not lock the secondary lock of the twin lock.

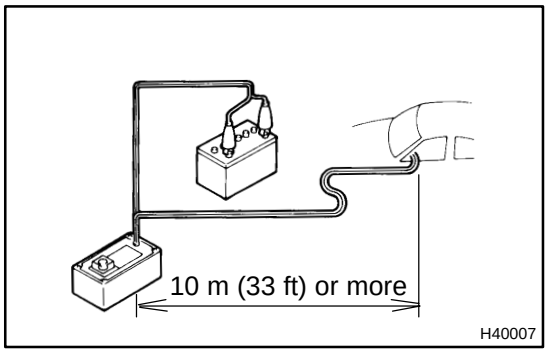

(2) Move the SST at least 10 m (33 ft) away from the front of the vehicle.

(3) Close all the doors and windows of the vehicle.

NOTICE:

Take care not to damage the SST wire harness.

(4) Connect the SST red clip to the battery positive (+) terminal and the black clip to the battery negative (–) terminal.

(d) Deploy the airbag.

(1) Check that no one is inside the vehicle or within 10 m (33 ft) area around the vehicle.

(2) Press the SST activation switch and deploy the airbag.

HINT:

The airbag deploys simultaneously as the LED of SST activation switch lights up.

(e) Dispose of the front seat airbag assy.

CAUTION:

- **The front seat airbag assy is very hot when the airbag is deployed, so leave it alone for at least 30 minutes after deployment.**
- **Use gloves and safety glasses when handling a front seat airbag assy with the deployed airbag.**
- **Do not apply water, etc. to a front seat airbag assy with the deployed airbag.**
- **Always wash your hands with water after completing the operation.**

(1) When scrapping a vehicle, deploy the airbag and scrap the vehicle with the front seat airbag assy still installed.

2. DISPOSE FRONT SEAT AIRBAG ASSY RH(WHEN DISPOSING OF AIRBAG ASSEMBLY DEPLOYMENT METHOD)

NOTICE:

- **When disposing of the front seat airbag assy only, never use the customer's vehicle to deploy the airbag.**
- **Be sure to follow the procedure given below when deploying the airbag.**

HINT:

Have a battery ready as the power source to deploy the airbag.

(a) Remove the front seat airbag assy.

(1) Remove the 2 nuts and front seat airbag assy from the seatback assembly.

CAUTION:

Store the front seat airbag assy with the airbag deployment side facing upward.

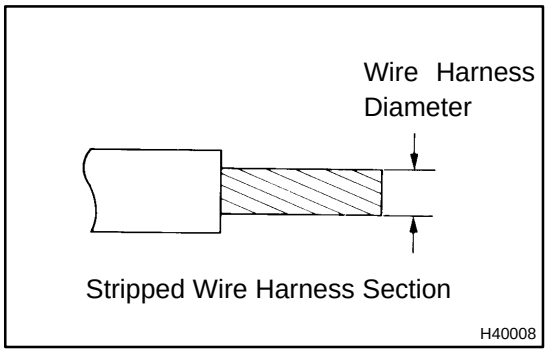

(b) Using a service–purpose wire harness, tie down the front seat airbag assy.

Wire harness: Stripped wire harness section 1.25 mm^2 or more (0.0019 in^2 or more)

HINT:

To calculate the square of the stripped wire harness section :

Square = 3.14 x $(Diameter)^2$ divided by 4

CAUTION:

If a wire harness which is too thin or some other thing is used to tie down the side airbag assembly, it may be snapped by the shock when the airbag is deployed. This is highly dangerous. Always use a wire harness for vehicle use which is at least 1.25 mm^2 (0.0019 in^2).

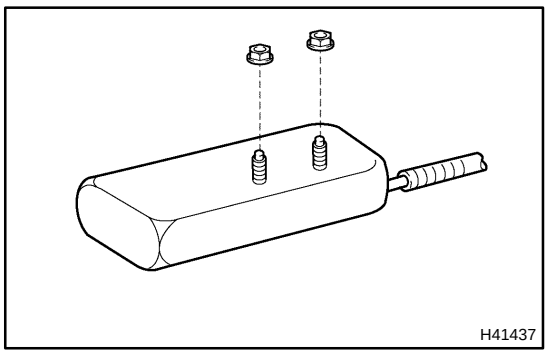

(1) Install the 2 nuts in the front seat airbag assy.

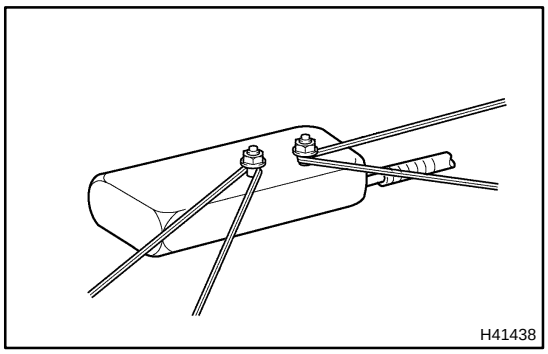
H41438

(2) Wind the wire harness around the stud bolts of the front seat airbag assy as shown in the illustration.

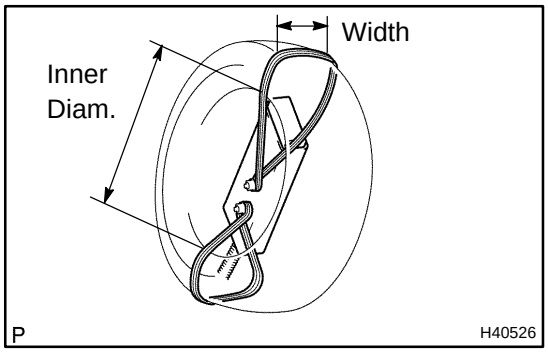

H40526

(3) Position the front seat airbag assy inside the tire with the airbag deployment direction facing inside.

Tire size : Must exceed the following dimensions:–
Width 185 mm (7.28 in.)
Inner diameter 360 mm (14.17 in.)

CAUTION:

- **Make sure the wire harness is tight. It is very dangerous when a loose wire harness results in the front seat airbag assy coming free due to the shock from the airbag deploying.**
- **Always tie down the front seat airbag assy with the airbag door facing inside.**

NOTICE:

The tire will be marked by the airbag deployment, so use the redundant tire.

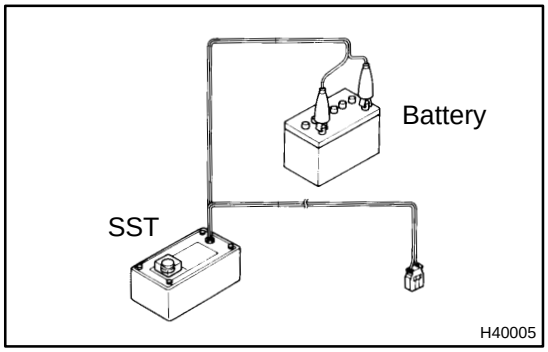

H40005

(c) Check functioning of the SST.
SST 09082–00700

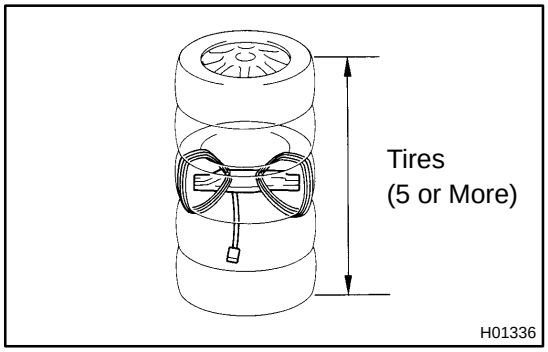

H01336

(d) Place the tires.
(1) Place at least 2 tires under the tire to which the front seat airbag assy is tied.
(2) Place at least 2 tires over the tire to which the front seat airbag assy is tied. The top tire should have the wheel installed.

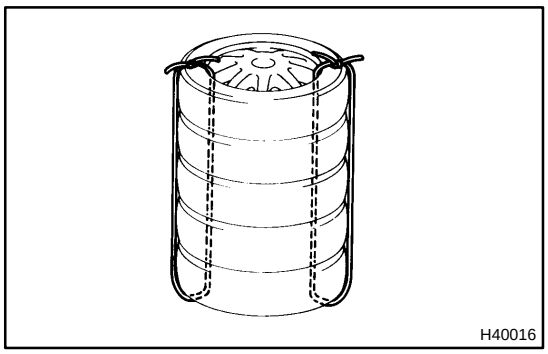
H40016

(3) Tie the tires together with 2 wire harnesses.

CAUTION:

Make sure that the wire harnesses are tight. It is very dangerous when loose wire harnesses results in the tires coming free due to the shock from the airbag deploying.

HINT:

Place the SST connector and wire harness inside tires. Secure at least 1 m (3 ft) of slack for the wire harness.

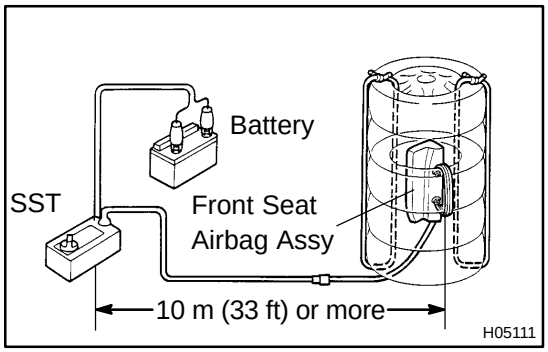

(e) Install the SST.

(1) Connect the connector of 2 SST to the front seat airbag assy connector.

SST 09082–00700, 09082–00750

NOTICE:

To avoid damaging the SST connector and wire harness, do not lock the secondary lock of the twin lock.

(f) Deploy the airbag.

(1) Connect the SST red clip to the battery positive (+) terminal and the black clip to the battery negative (–) terminal.

(2) Check that no one is within 10 m (33 ft) area around the tire which the front seat airbag assy is tied to.

(3) Press the SST activation switch and deploy the airbag.

HINT:

The airbag deploys simultaneously as the LED of the SST activation switch lights up.

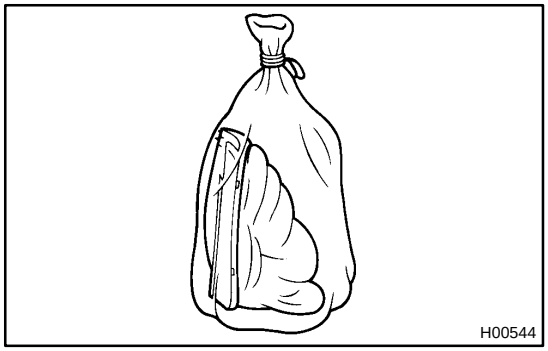
H00544

(g) Dispose of the side airbag assembly.

CAUTION:

- **The front seat airbag assy is very hot when the airbag is deployed, so leave it alone for at least 30 minutes after deployment.**
- **Use gloves and safety glasses when handling a front seat airbag assy with the deployed airbag.**
- **Do not apply water etc. to a front seat airbag assy with the deployed airbag.**
- **Always wash your hands with water after completing the operation.**

(1) Remove the front seat airbag assy from the tire.

(2) Place the front seat airbag assy in a vinyl bag, tie the end tightly and dispose of it in the same way as other general parts disposal.

INSTRUMENT PANEL PASSENGER AIR BAG ASSY

600CF–01

COMPONENTS

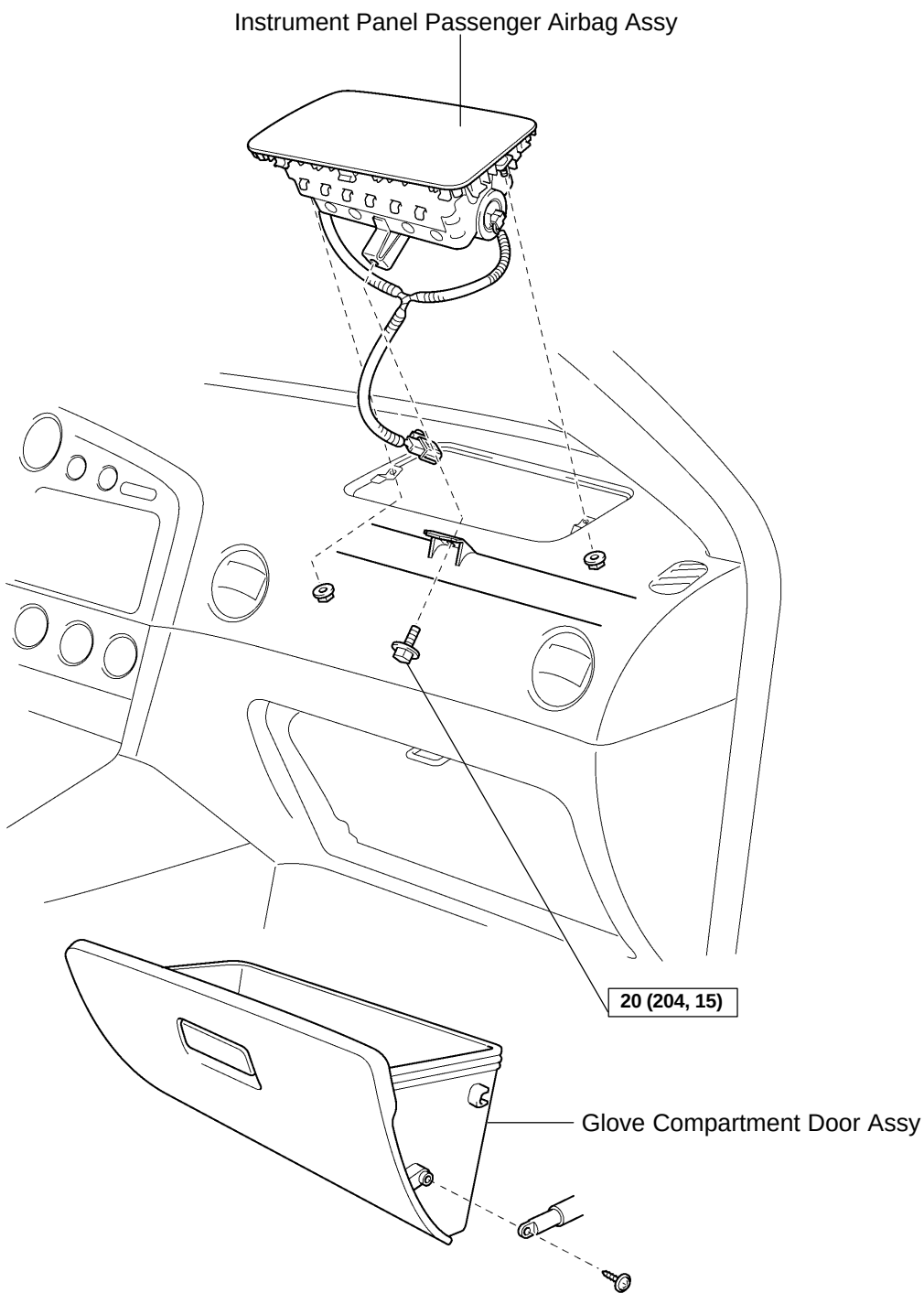

N·m (kgf·cm, ft·lbf) : Specified torque

C

H41975

DISPOSAL

HINT:

When scrapping vehicle equipped with an SRS or disposing of a instrument panel passenger airbag assy, always first deploy the airbag in accordance with the procedure described below. If any abnormality occurs with the airbag deployment, contact the SERVICE DEPT. of the TOYOTA MOTOR SALES, U.S.A., INC.

CAUTION:

- **Never dispose of a instrument panel passenger airbag assy which has an undeployed airbag.**
- **The airbag produces a sizeable exploding sound when it deploys, so perform the operation out–of–doors and where it will not create a nuisance to nearby residents.**

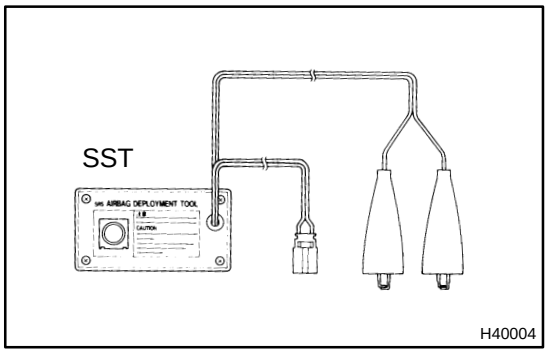

- **When deploying the airbag, always use the specified SST (SRS Airbag Deployment Tool). Perform the operation in a place away from electrical noise.**
- **When deploying an airbag, perform the operation at least 10 m (33 ft) away from the instrument panel passenger airbag assy.**
- **The instrument panel passenger airbag assy is very hot when the airbag is deployed, so leave it alone for at least 30 minutes after deployment.**
- **Use gloves and safety glasses when handling a instrument panel passenger airbag assy with the deployed airbag.**
- **Always wash your hands with water after completing the operation.**
- **Do not apply water, etc. to a instrument panel passenger airbag assy with the deployed airbag.**

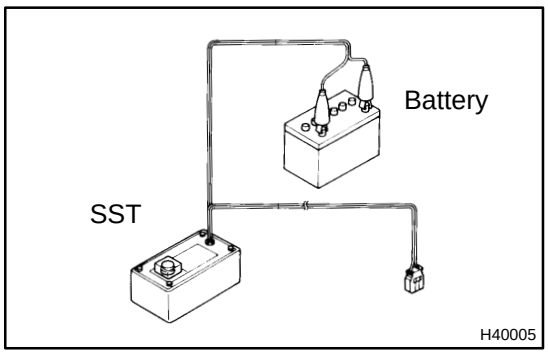

1. DISPOSE INSTRUMENT PANEL PASSENGER AIR BAG ASSY (WHEN SCRAPPING VEHICLE DEPLOYMENT METHOD)

HINT:

Have a battery ready as the power source to deploy the airbag.

(a) Check functioning of the SST (See step 1–(a) on page 60–14).

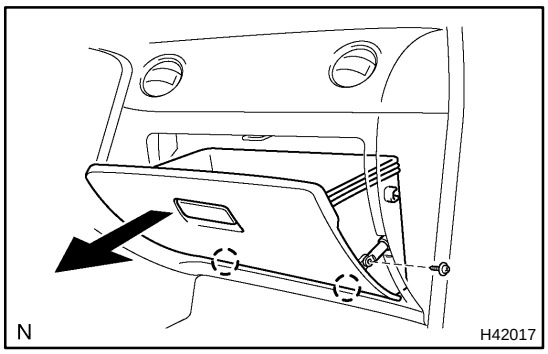

(b) Remove the screw and glove compartment door assy.

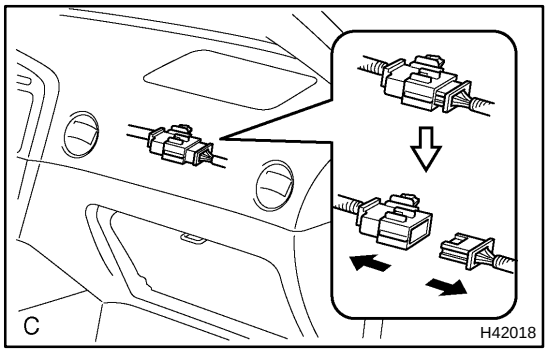

(c) Disconnect the instrument panel passenger airbag connector.

NOTICE:

When handling the airbag connector, take care not to damage the airbag wire harness.

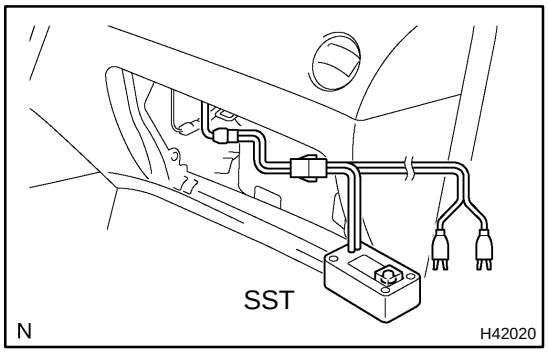

(d) Install the SST.

(1) Connect the connector of the SST to the instrument panel passenger airbag assy connector.

SST 09082–00700, 09082–00780

NOTICE:

To avoid damaging the SST connector and wire harness, do not lock the secondary lock of the twin lock.

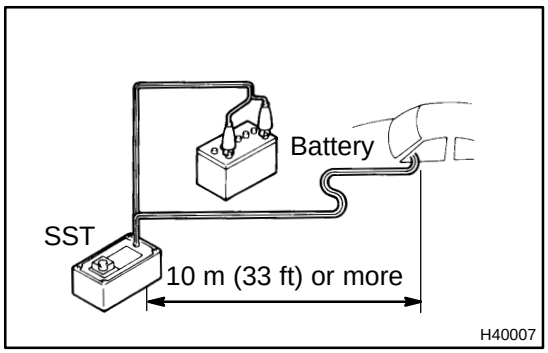

(2) Move the SST to at least 10 m (33 ft) away from the front of the vehicle.

(3) Close all the doors and windows of the vehicle.

NOTICE:

Take care not to damage the SST wire harness.

(4) Connect the red clip of the SST to the battery positive (+) terminal and the black clip to the negative (–) terminal.

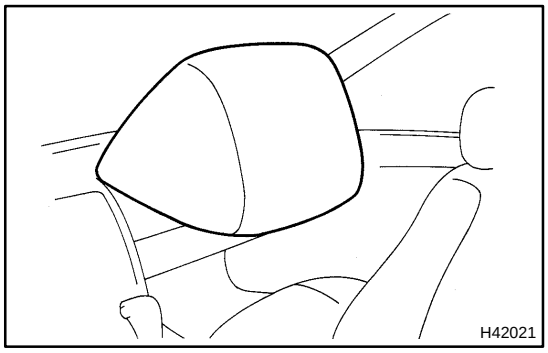

(e) Deploy the airbag.

(1) Check that no one is inside the vehicle or within 10 m (33 ft) area around the vehicle.

(2) Press the SST activation switch and deploy the airbag.

HINT:

The airbag deploys simultaneously as the LED of the SST activation switch lights up.

(f) Dispose the instrument panel passenger airbag assy.

CAUTION:

- **The instrument panel passenger airbag assy is very hot when the airbag is deployed, so leave it alone for at least 30 minutes after deployment.**
- **Use gloves and safety glasses when handling a instrument panel passenger airbag assy with the deployed airbag.**
- **Always wash your hands with water after completing the operation.**
- **Do not apply water, etc. to a instrument panel passenger airbag assy with the deployed airbag.**
- **When moving a vehicle for scrapping which has a instrument panel passenger airbag assy with the deployed airbag, use gloves and safety glasses.**

HINT:

When scrapping a vehicle, deploy the airbag and scrap the vehicle with the instrument panel passenger airbag assy still installed.

2. DISPOSE INSTRUMENT PANEL PASSENGER AIR BAG ASSY (WHEN DISPOSING OF AIRBAG ASSEMBLY DEPLOYMENT METHOD)

NOTICE:

- **When disposing of the instrument panel passenger airbag assy only, never use the customer's vehicle to deploy the airbag.**
- **Be sure to follow the procedure given below when deploying the airbag.**

HINT:

Have a battery ready as the power source to deploy the airbag.

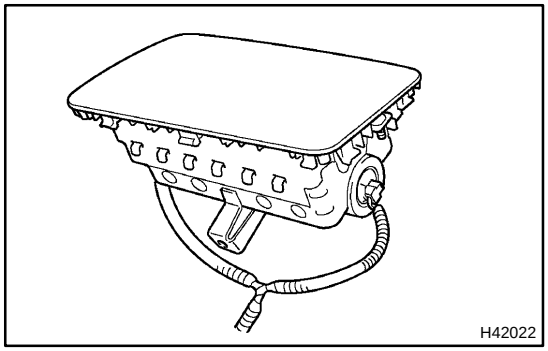

(a) Remove the instrument panel passenger airbag assy (See page 60–25).

CAUTION:

- **When removing the instrument panel passenger airbag assy, work must be started 90 seconds after the ignition switch is turned to the "LOCK" position and the negative (–) terminal cable is disconnected from the battery.**
- **Store the instrument panel passenger airbag assy with the airbag deployment side facing upward.**

(b) Using a service–purpose wire harness for the vehicle, tie down the instrument panel passenger airbag assy to the tire.

Wire harness: Stripped wire harness section 1.25 mm^2 or more (0.0019 in.^{2} or more)

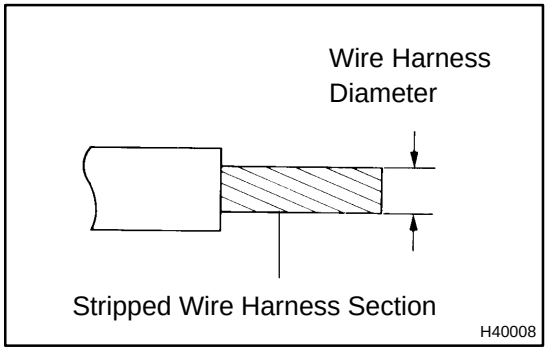

CAUTION:

If the instrument panel passenger airbag assy is tied down with too thin wire harness, it may snap. This is highly dangerous. Always use a wire harness which is at least 1.25 mm^2 (0.0019 in.^{2}).

HINT:
To calculate the square of the stripped wire harness section:
Square = 3.14 X (Diameter)^2 divided by 4

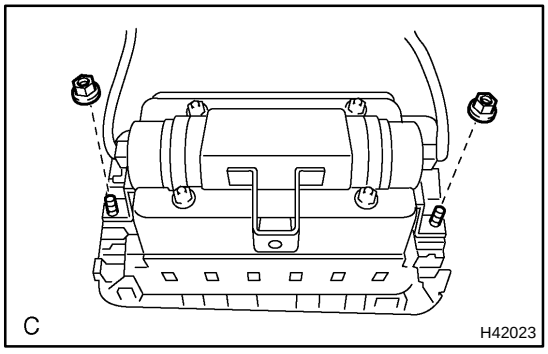

(1) Install the 2 nuts to the instrument panel passenger airbag assy.

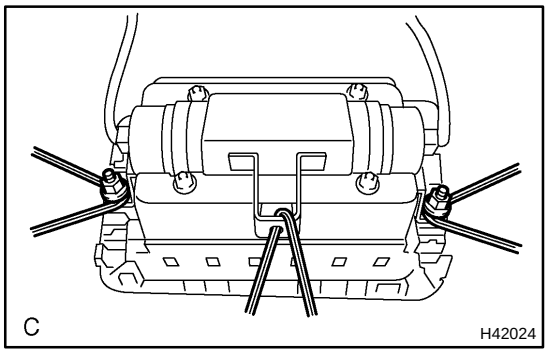

(2) Wind the wire harness around the brackets, as shown in the illustration.
(3) Position the instrument panel passenger airbag assy inside the tire with the airbag deployment side facing inside.

Tire size: Must exceed the following dimensions–
Width: 185 mm (7.28 in.)
Inner diameter: 360 mm (14.17 in.)

CAUTION:

- **Make sure that the wire harness is tight. It is very dangerous if looseness in the wire harness results in the instrument panel passenger airbag assy coming free due to the shock from the airbag deploying.**
- **Always tie down the instrument panel passenger airbag assy with the airbag deployment side facing inside.**

NOTICE:
The tire will be marked by the airbag deployment, so use a redundant tire.

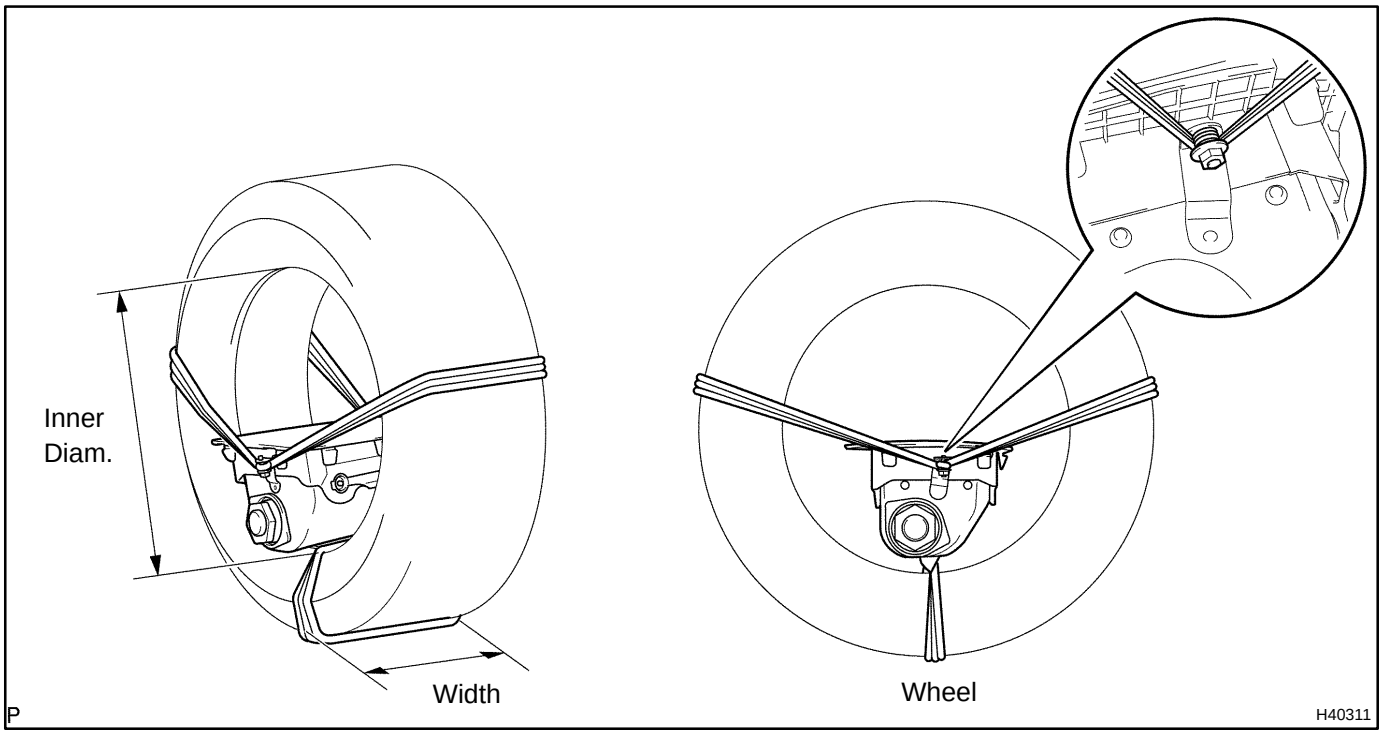

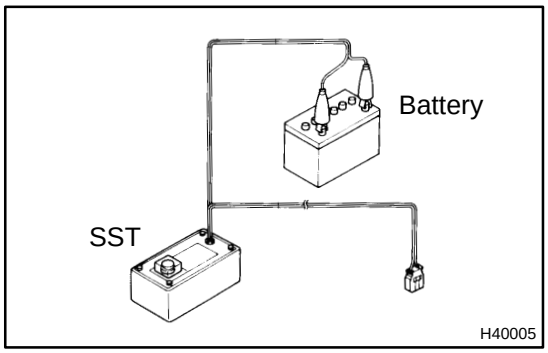

(c) Check functioning of the SST (See step 1–(a) on page 60–14).
SST 09082–00700

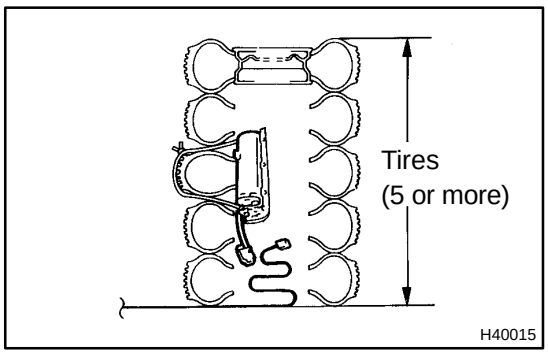

(d) Place tires.
(1) Place at least 2 tires under the tire to which the instrument panel passenger airbag assy is tied.
(2) Place at least 2 tires over the tire to which the instrument panel passenger airbag assy is tied. The top tire should have the wheel installed.

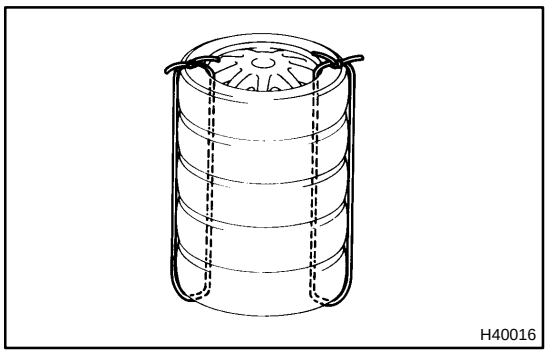

(3) Tie the tires together with 2 wire harness.

CAUTION:

Make sure that the wire harness is tight. It is very dangerous if loose wire harness result in the tires coming free due to the shock from the airbag deploying.

HINT:

Place the SST connector and wire harness inside tires. Secure at least 1 m (3 ft) of slack for the wire harness.

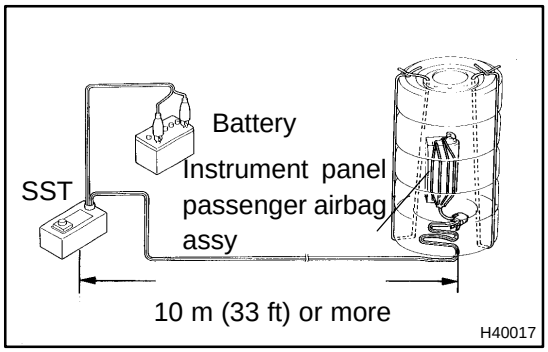

(e) Install the SST.

(1) Connect the connectors of the 2 SST to the instrument panel passenger airbag assy connector.

SST 09082–00700, 09082–00780

NOTICE:

To avoid damaging the SST connector and wire harness, do not lock the secondary lock of the twin lock.

(f) Deploy the airbag.

(1) Connect the SST red clip to the battery positive (+) terminal and the black clip to the battery negative (–) terminal.

(2) Check that no one is within 10 m (33 ft) area around the tire which the instrument panel passenger airbag assy is tied to.

(3) Press the SST activation switch and deploy the airbag.

HINT:

The airbag deploys simultaneously as the LED of the SST activation switch lights up.

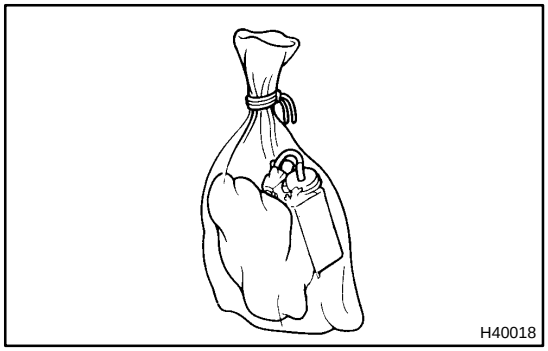

(g) Dispose the instrument panel passenger airbag assy.

CAUTION:

- **The instrument panel passenger airbag assy is very hot when the airbag is deployed, so leave it alone for at least 30 minutes after deployment.**
- **Use gloves and safety glasses when handling a instrument panel passenger airbag assy with the deployed airbag.**
- **Always wash your hands with water after completing the operation.**
- **Do not apply water, etc. to a instrument panel passenger airbag assy with the deployed airbag.**

(1) Remove the instrument panel passenger airbag assy from the tire.

(2) Place the instrument panel passenger airbag assy in a vinyl bag, tie the end tightly and dispose of it in the same way as other general parts.

600CG–01

REPLACEMENT

HINT:

COMPONENTS: See page 60–24

1. PRECAUTION (See page 60–1)

2. SEPARATE BATTERY NEGATIVE TERMINAL (See page 60–1)

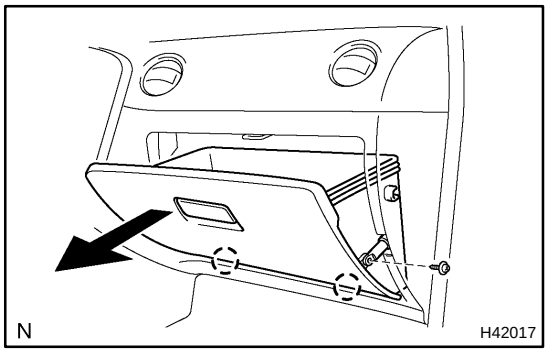

3. REMOVE GLOVE COMPARTMENT DOOR ASSY

(a) Remove the screw and glove compartment door assy.

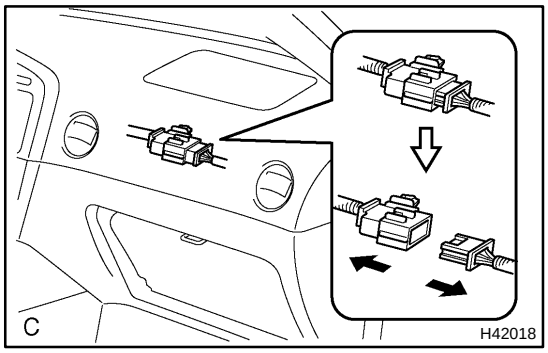

4. SEPARATE PASSENGER AIRBAG CONNECTOR

(a) Disconnect the instrument panel passenger airbag connector.

NOTICE:

When handling the airbag connector, take care not to damage the airbag wire harness.

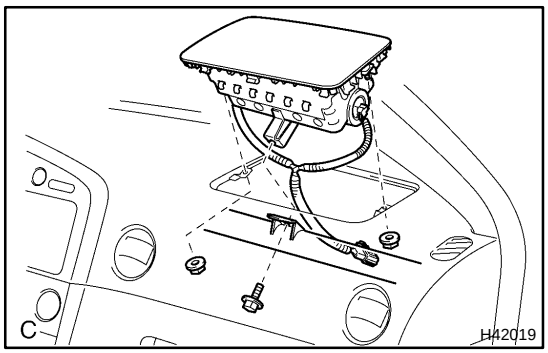

5. REMOVE INSTRUMENT PANEL PASSENGER AIR BAG ASSY

(a) Remove the bolt and 2 nuts.

(b) Remove the instrument panel passenger airbag assy from the instrument panel.

CAUTION:

- **Do not store the instrument panel passenger airbag assy with the airbag deployment side facing down.**
- **Never disassemble the instrument panel passenger airbag assy.**

6. INSTALL INSTRUMENT PANEL PASSENGER AIR BAG ASSY

(a) Install the bolt.

Torque: 20 N·m (204 kgf·cm, 15 ft·lbf)

(b) Install the 2 nuts.

CAUTION:

- **When installing the instrument panel passenger airbag assy take care that the wiring does not inter fare with other parts and is not pinched between other parts.**
- **Make sure that no foreign objects are trapped between the airbag, and within the module.**

NOTICE:

- **Make sure that the instrument panel passenger airbag assy is installed to the specified torque.**
- **If the instrument panel passenger airbag assy has been dropped, or there are cracks, dents or other defects in the case or connector, replace the instrument panel passenger airbag assy with a new one.**

(c) Connect the instrument panel passenger airbag connector.

7. INSPECT INSTRUMENT PANEL PASSENGER AIR BAG ASSY (See page 60–8)

8. INSTALL GLOVE COMPARTMENT DOOR ASSY

9. INSPECT SRS WARNING LIGHT (See Page 05–543)

SIDE AIR BAG SENSOR ASSY RH

600CC–01

COMPONENTS

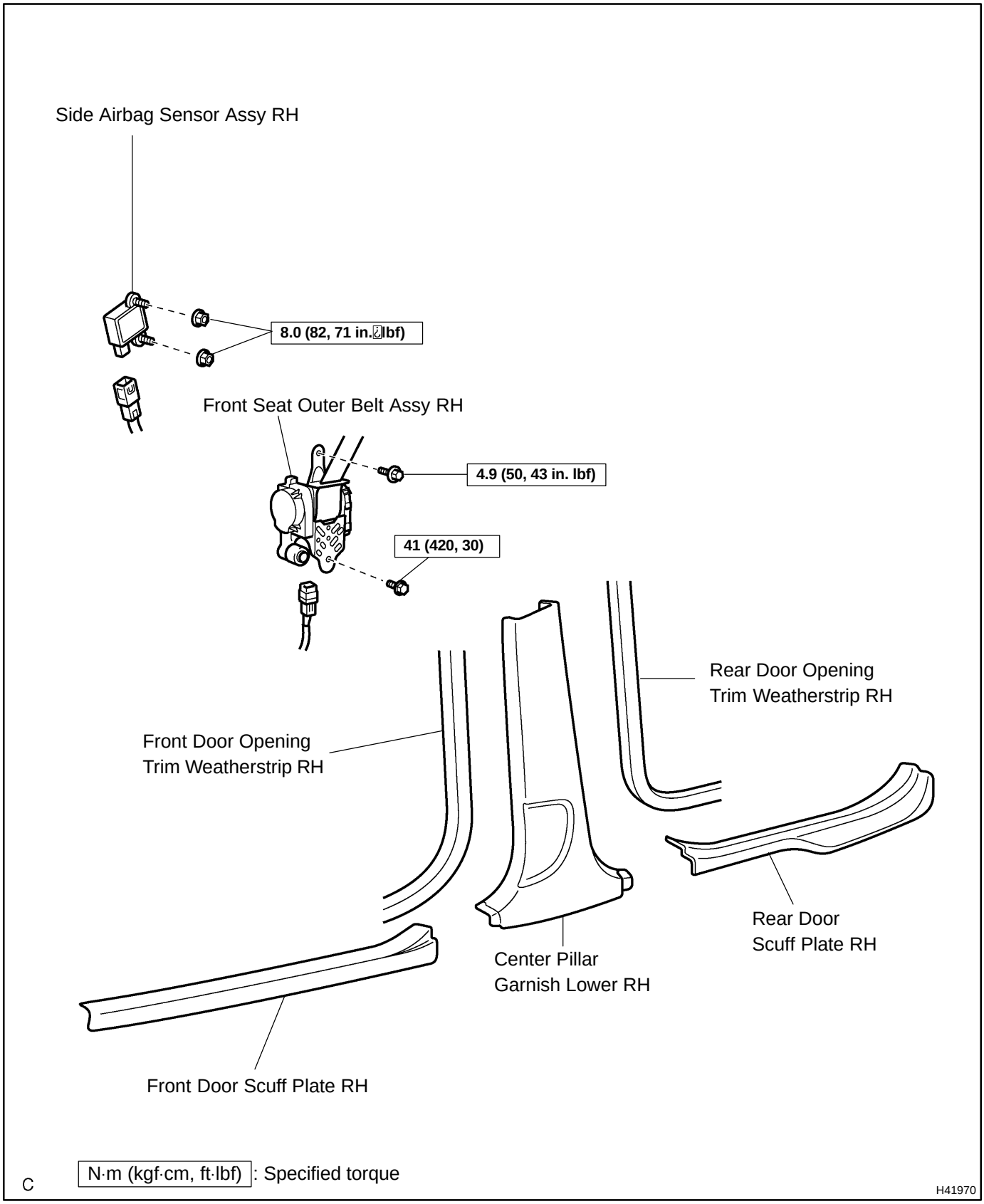

C

REPLACEMENT

HINT:

COMPONENTS: See page 60–44

1. **PRECAUTION (See page 60–1)**
2. **SEPARATE BATTERY NEGATIVE TERMINAL (See page 60–1)**
3. **REMOVE FRONT DOOR SCUFF PLATE RH (See page 76–17)**
4. **REMOVE REAR DOOR SCUFF PLATE RH (See page 76–17)**
5. **REMOVE FRONT DOOR OPENING TRIM RH (See page 76–17)**
6. **REMOVE REAR DOOR OPENING TRIM RH (See page 76–17)**
7. **REMOVE CENTER PILLAR GARNISH LOWER RH (See page 76–17)**
8. **SEPARATE FRONT SEAT OUTER BELT ASSY RH (See page 61–6)**

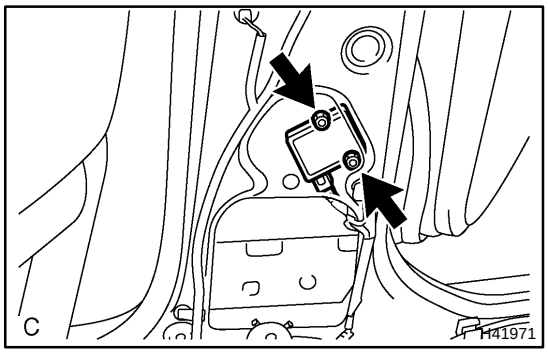

9. **REMOVE SIDE AIR BAG SENSOR ASSY RH**

(a) Disconnect the connector from the side airbag sensor assy RH.

(b) Remove the 2 nuts and side airbag sensor assy RH.

10. **INSPECT SIDE AIR BAG SENSOR ASSY RH (See page 60–8)**
11. **INSTALL SIDE AIR BAG SENSOR ASSY RH**

(a) Install the 2 nuts and side airbag sensor assy RH.
Torque: 8.0 N·m (82 kgf·cm, 71 in.·lbf)

(b) Connect the side airbag sensor connector.

NOTICE:

- **Installation of the connector is done with the sensor assembly installed. Make sure the sensor assembly is installed with the specified torque.**
- **If the sensor assembly has been dropped, or there are cracks, dents or other defects in the case, bracket or connector, replace the sensor assembly with a new one.**
- **When installing the sensor assembly, take care that the SRS wiring does not interfere with other parts and is not pinched between other parts.**
- **After installation, shake the sensor assembly to check that there is no looseness.**

12. **INSTALL FRONT SEAT OUTER BELT ASSY RH**
Torque:
Upper bolt: 4.9 N·m (50 kgf·cm, 43 in.·lbf)
Lower bolt: 41 N·m (420 kgf·cm, 30 ft·lbf)
13. **INSPECT SRS WARNING LIGHT (See page 05–543)**

6108C–01

INSPECTION

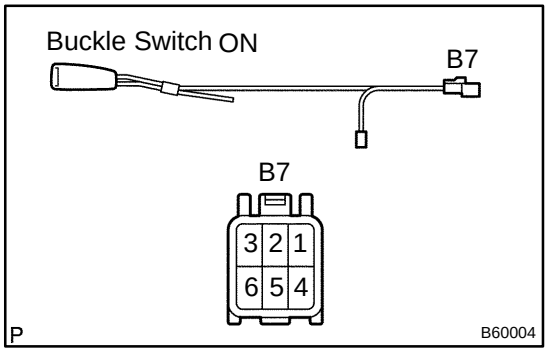

1. INSPECT FRONT SEAT INNER BELT ASSY LH

(a) Inspect the buckle switch.

(1) Fasten the seat belt (buckle switch ON).

(2) Inspect the continuity and resistance between the terminals, as shown in the illustration and table.

Standard:

Terminal No.	Specified condition
B7–1 ⇔ B7–2	1,330 Ω
B7–1 ⇔ B7–3	No continuity

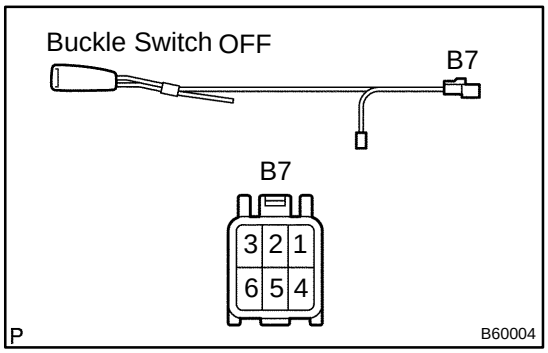

(3) Release the seat belt (buckle switch OFF).

(4) Inspect the continuity and resistance between the terminals, as shown in the illustration and table.

Standard:

Terminal No.	Specified condition
B7–1 ⇔ B7–2	330 Ω
B7–1 ⇔ B7–3	Continuity

If the result is not as specified, replace the inner belt.

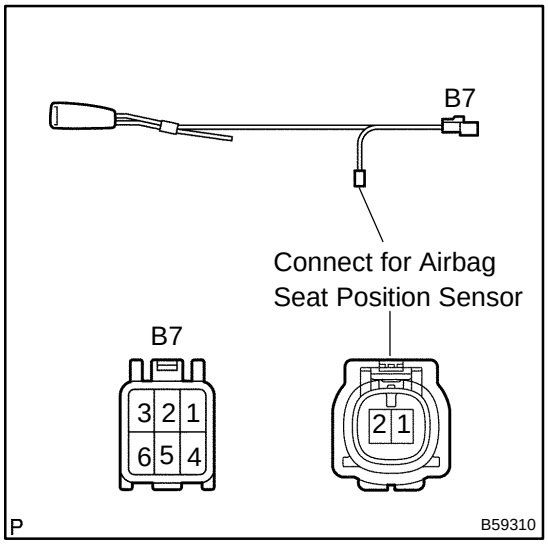

(b) Inspect the circuit for the airbag seat position sensor.

(1) Inspect the continuity between the B7 connector and connector for the airbag seat position sensor, as shown in the illustration and table.

Standard:

Terminal No.	Specified condition
B7–4 ⇔ 1 (Connector for airbag seat position senor)	Continuity
B7–5 ⇔ 2 (Connector for airbag seat position senor)	

If the result is not as specified, replace the inner belt.

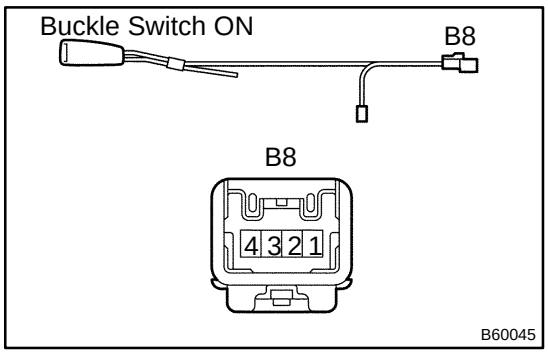

2. INSPECT FRONT SEAT INNER BELT ASSY RH

(a) Inspect the buckle switch.

(1) Fasten the seat belt (buckle switch ON).

(2) Inspect the continuity between terminals B8–1 and B8–2, as shown in the illustration.

Standard: No continuity

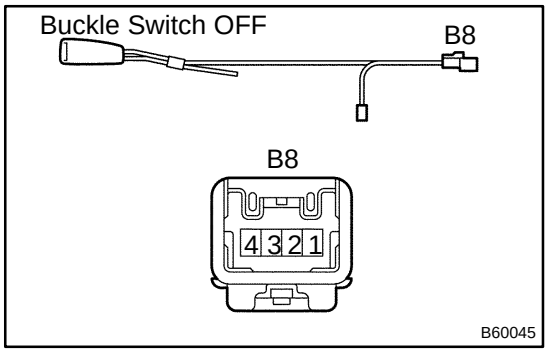

(3) Release the seat belt (buckle switch OFF).

(4) Inspect the continuity between terminals B8–1 and B8–2, as shown in the illustration.

Standard: Continuity

If the result is not as specified, replace the inner belt.

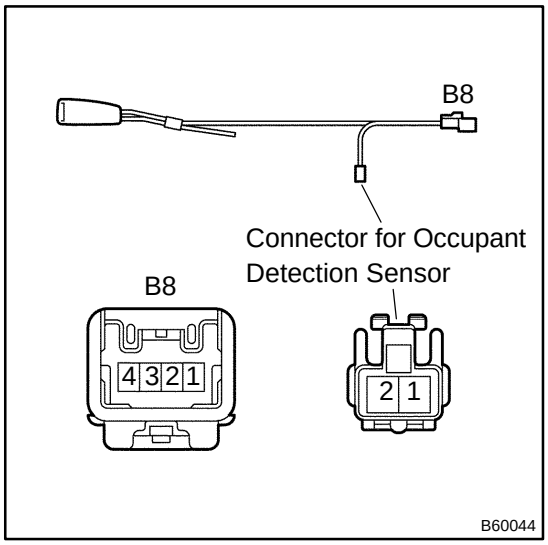

(b) Inspect the circuit for the occupant detection sensor.

(1) Connect the connector terminals 1 and 2 for the occupant detection sensor.

(2) Inspect the continuity between terminals B8–3 and B8–4, as shown in the illustration.

Standard: Continuity

If the result is not as specified, replace the inner belt.

SEAT BELT WARNING SYSTEM

61050–02

LOCATION

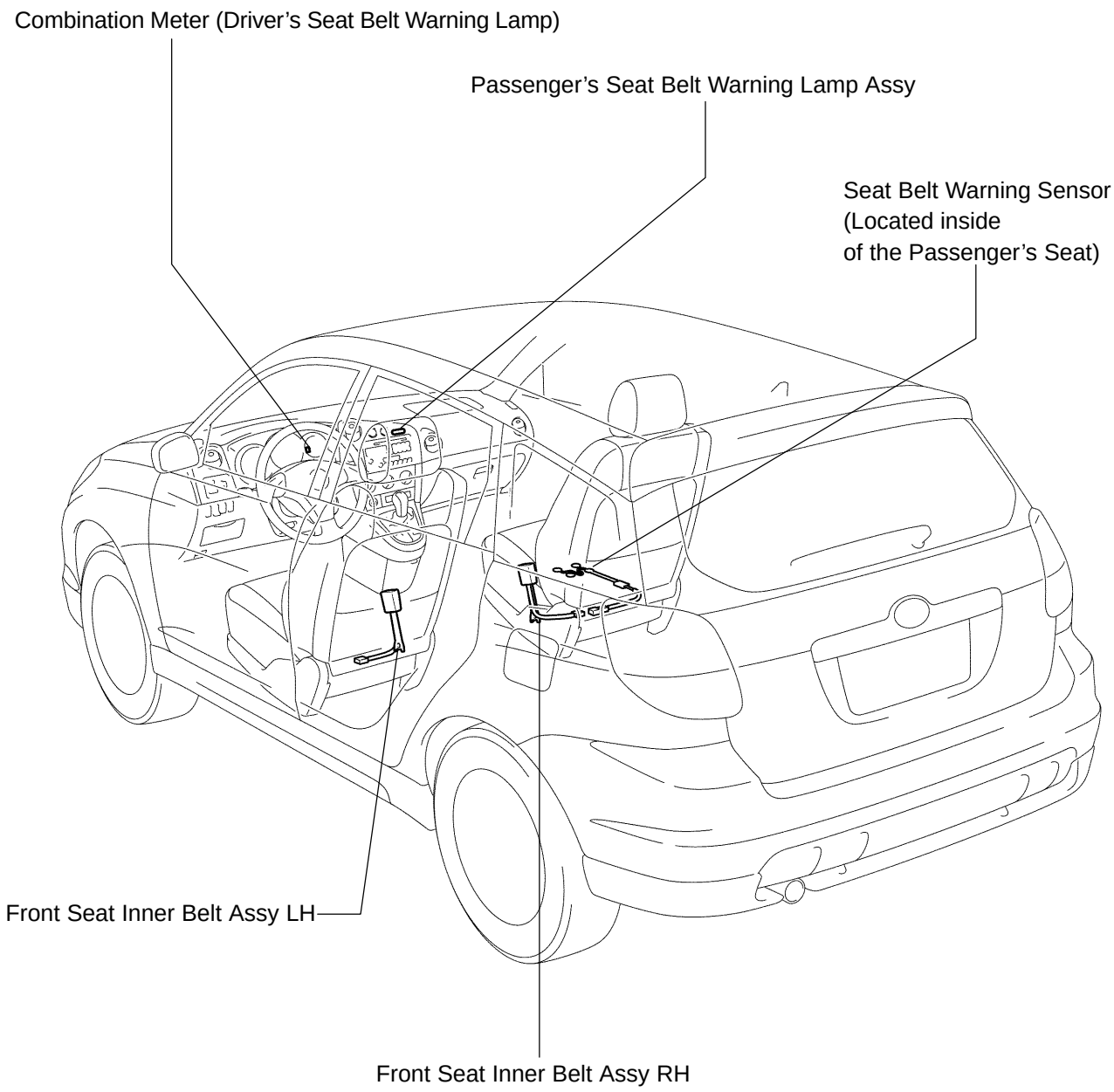

P

B59295

61051–02

PROBLEM SYMPTOMS TABLE

Symptom	Suspect Area	See page
Driver' seat belt warning lamp does not light up	1. fuse	
	2. IG1 relay	
	3. Combination meter	71–18
	4. Air bag sensor assembly center	60–39
	5. Front seat inner belt assembly LH	61–3
	6. Wire harness	
Passenger's seat belt warning lamp assy does not light up	1. fuse	
	2. IG1 relay	
	3. Passenger's seat belt warning lamp assy	61–3
	4. Front seat inner belt assembly RH	61–3
	5. Wire harness	

FRONT SEAT BELT

COMPONENTS

6108D–01

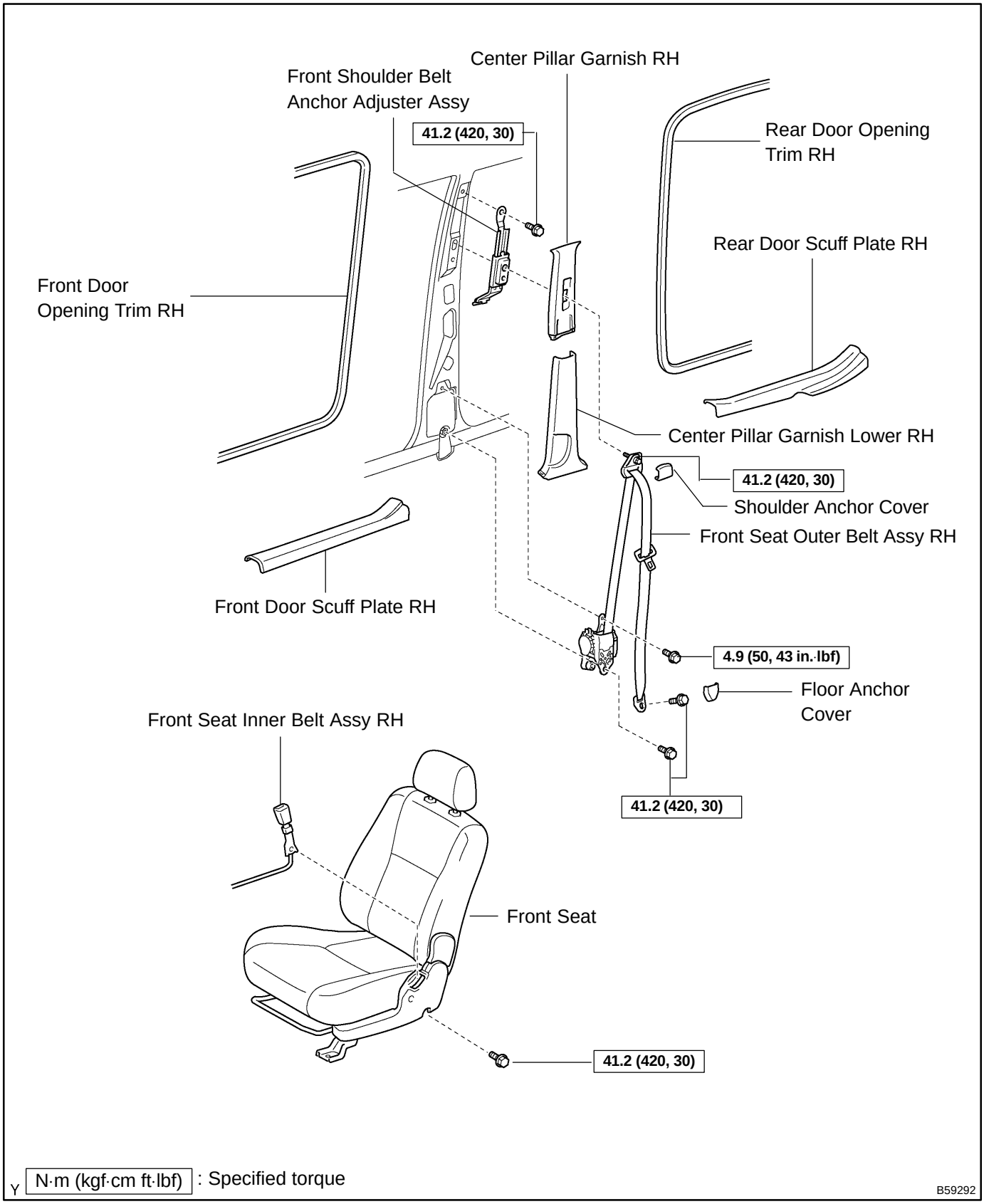

6108E–01

DISPOSAL

HINT:

When scrapping vehicles epuipped with the seat belt pretensioner or disposing of the front seat outer belt (with seat belt pretensioner) always first activate the seat belt pretensioner in accordance with the procedure described below. If any abnormality occurs in the seat belt pretensioner operation, contact the SERVICE DEPT. of the TOYOTA MOTOR SALES, U.S.A., INC. When disposing of the front seat outer belt (with seat belt pretensioner) activated in a collision, follow the same procedure given in step 2–(e) in ”DISPOSAL”.

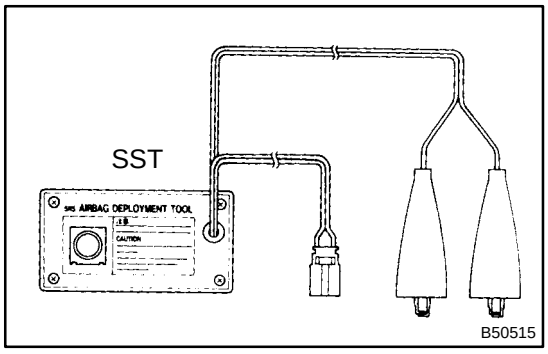

CAUTION:

- **Never dispose of the front seat outer belt with inactivated pretensioner.**
- **The seat belt pretensioner produces a sizeable exploding sound when it activates, so perform the operation outdoors so that it will not create a nuisance to nearby residents.**
- **When activating the front seat outer belt (with seat belt pretensioner), perform the operation at least 10 m (33 ft) away from the front seat outer belt.**
- **Use gloves and safety glasses when handling the front seat belt with activated pretensioner.**
- **Always wash your hands with water after completing the operation.**
- **Do not apply water, etc. to the front seat outer belt with activated pretensioner.**
- **When activating the seat belt pretensioner, always use the specified SST (SRS airbag deployment tool). Perform the operation in a place away from electrical noise.**

  SST 09082–00700

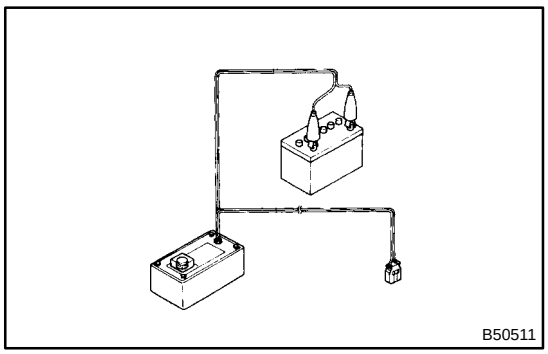

1. DISPOSE OF FRONT SEAT OUTER BELT ASSY RH (WHEN VEHICLE SCRAPPED WHEN INSTALLED WITH VEHICLE)

HINT:

Check that the battery positive voltage is above 12 V.

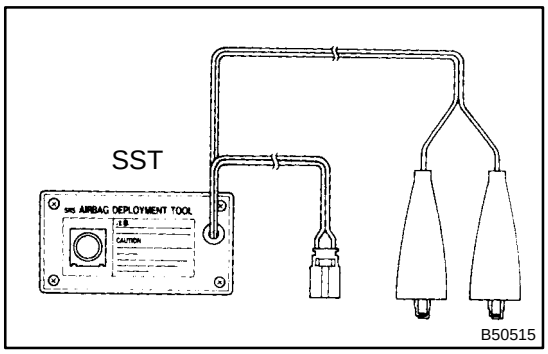

(a) Check functioning of SST.

CAUTION:

When activating the seat belt pretensioner, always use the specified SST.

SST 09082–00700, 09082–00770

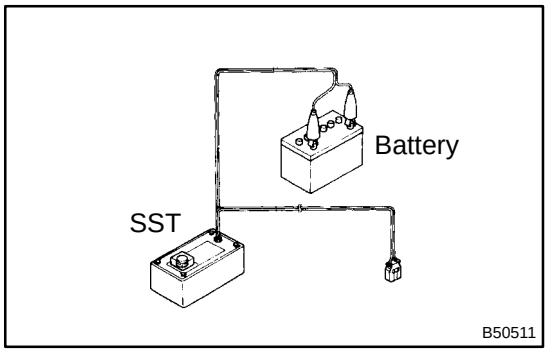

(1) Connect the SST to the battery.
Connect the SST red clip to the battery positive (+) terminal and the black clip to the battery negative (–) terminal.

HINT:

Do not connect the yellow connector which should be connected to the seat belt pretensioner.

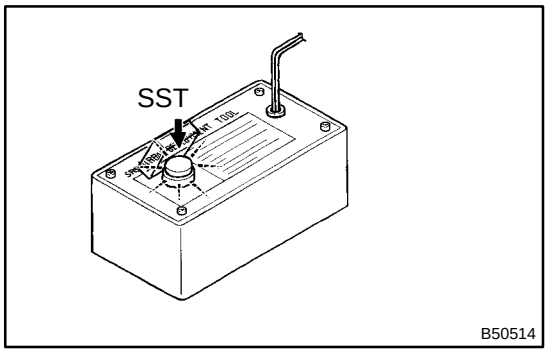

(2) Check functioning of SST.
Press the SST activation switch, and check that the LED of the SST activation switch lights up.

CAUTION:

If the LED lights up when the activation switch is not pressed, the SST probably malfunctions, so definitely do not use the SST.

(b) Disconnect the SST from the battery.

(c) Disconnect the pretensioner connector.

(1) Disconnect the battery negative terminal.

(2) Check the SRS airbag system (See page 60–1).

(3) Remove the front door scuff plate RH (See page 76–17).

(4) Remove the rear door scuff plate RH (See page 76–17).

(5) Remove the front door opening trim RH.

(6) Remove the rear door opening trim RH.

(7) Remove the center pillar garnish lower RH (See page 76–17).

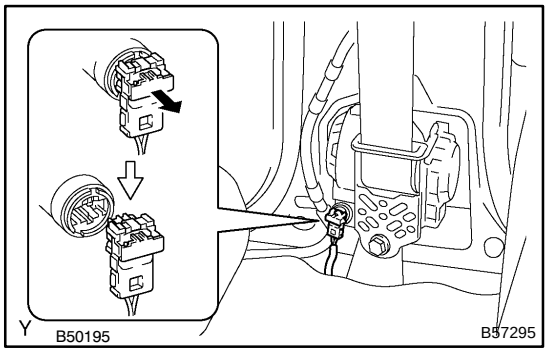

(8) Disconnect the pretensioner connector, as shown in the illustration.

(d) Install the SST.

(1) Install the floor anchor of the seat belt.

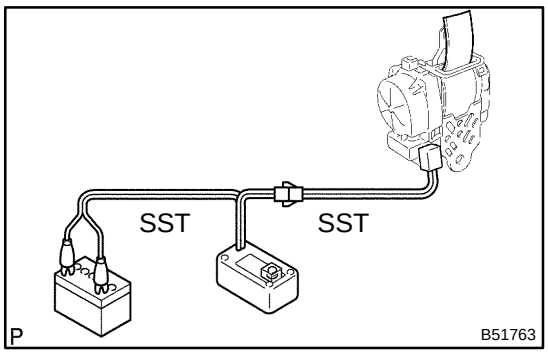

(2) Connect the 2 SSTs, then connect them to the seat belt pretensioner.

SST 09082–00700, 09082–00770

NOTICE:

To avoid damaging the SST connector and wire harness, do not lock the secondary lock of the twin lock.

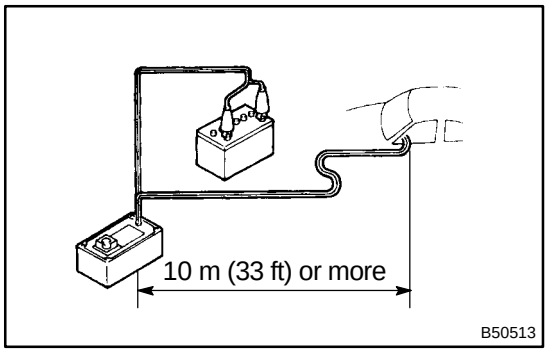

(3) Move the SST at least 10 m (33 ft) away from the front of the vehicle.

(4) Close all the doors and windows of the vehicle.

NOTICE:

Take care not to damage the SST wire harness.

(5) Connect the SST red clip to the battery positive (+) terminal and the black clip to the negative (–) terminal.

(e) Activate the seat belt pretensioner.

(1) Confirm that no one is inside the vehicle or within 10 m (33 ft) area around the vehicle.

(2) Press the SST activation switch and activate the seat belt pretensioner.

HINT:

The seat belt pretensioner operates simultaneously with the LED of the SST activation switch lighting up.

(f) Dispose of the front seat outer belt (with seat belt pretensioner).

CAUTION:

- **The front seat outer belt is very hot when the seat belt pretensioner is activated, so leave it alone for at least 30 minutes after activation.**
- **Use gloves and safety glasses when handling the front seat outer belt with activated pretensioner.**
- **Always wash your hands with water after completing the operation.**
- **Do not apply water, etc. to the front seat outer belt with activated pretensioner.**

HINT:

When scrapping a vehicle, activate the seat belt pretensioner, and scrap the vehicle with activated front seat outer belt being installed.

2. DISPOSE OF FRONT SEAT OUTER BELT ASSY RH (WHEN NOT INSTALLED WITH VEHICLE)

NOTICE:

- **When disposing of the front seat outer belt (with seat belt pretensioner) only, never use the customer's vehicle to activate the seat belt pretensioner.**
- **Be sure to follow the procedure given on the next page when activating the seat belt pretensioner.**

(a) Remove the front seat outer belt asembly (See page 61–6).

HINT:

Cut the belt near the seat belt retractor.

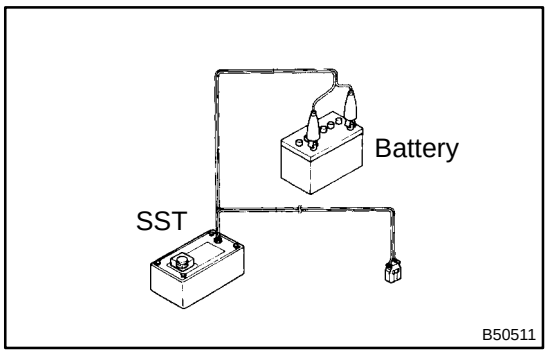

(b) Check functioning of SST (See step 1–(a)).
SST 09082–00700, 09082–00770

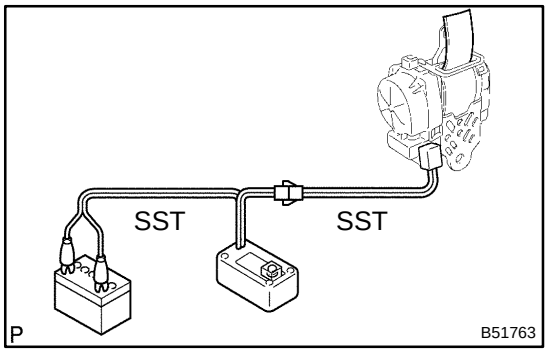

(c) Install the SST.
(1) Connect the 2 SSTs, then connect them to the seat belt pretensioner.
SST 09082–00700, 09082–00770

NOTICE:
To avoid damaging the SST connector and wire harness, do not lock the secondary lock of the twin lock.

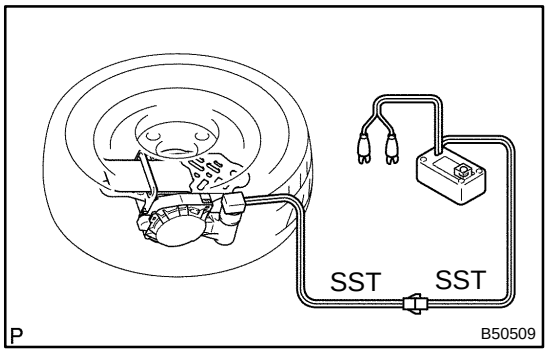

(2) Place the front seat outer belt on the ground and cover it with a disc wheel with tire.

NOTICE:
Place the front seat outer belt, as shown in the illustration.

(3) Move the SST at least 10 m (33 ft) away from the disc wheel.

NOTICE:
Take care not to damage the SST wire harness.

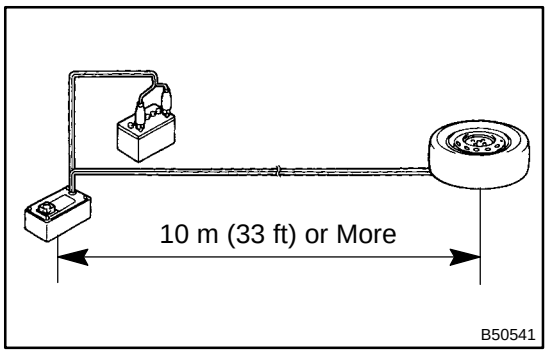

(d) Activate the seat belt pretensioner.
(1) Connect the SST red clip to the battery positive (+) terminal and the black clip to the battery negative (–) terminal.
(2) Check that no one is within 10 m (33 ft) area around the disc wheel.
(3) Press the SST activation switch and activate the seat belt pretensioner.

HINT:
The seat belt pretensioner operates simultaneously with the LED of the SST activation switch lighting up.

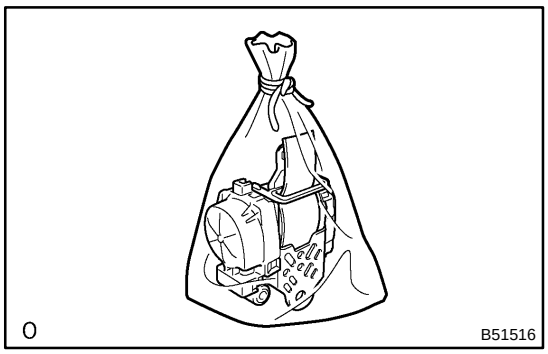

(e) Dispose of the front seat outer belt (with seat belt pretensioner).

CAUTION:

- **The front seat outer belt is very hot when the seat belt pretensioner is activated, so leave it alone for at least 30 minutes after activation.**
- **Use gloves and safety glasses when handling the front seat outer belt with activated pretensioner.**
- **Always wash your hands with water after completing the operation.**
- **Do not apply water, etc. to the front seat outer belt with activated pretensioner.**

(1) Remove the disc wheel and SST.

(2) Place the front seat outer belt in a vinyl bag, tie the end tightly and dispose of it in the same way as other general parts.

6108F–01

REPLACEMENT

HINT:

- Installation is in the reverse order of the removal. But the installation is indicated only when it has a point.
- In the LH side, work in the same procedure as in the RH side.

1. DISCONNECT BATTERY NEGATIVE TERMINAL

2. REMOVE FRONT SEAT ASSEMBLY RH (See page 72–6)

3. REMOVE FRONT SEAT INNER BELT ASSY RH

(a) Remove the bolt and front seat inner belt.

4. REMOVE FRONT DOOR SCUFF PLATE RH (See page 76–17)

5. REMOVE REAR DOOR SCUFF PLATE RH (See page 76–17)

6. REMOVE FRONT DOOR OPENING TRIM RH

7. REMOVE REAR DOOR OPENING TRIM RH

8. REMOVE CENTER PILLAR GARNISH LOWER RH (See page 76–17)

9. REMOVE FRONT SEAT OUTER BELT ASSY RH

NOTICE:

- **Removal operation of the seat belt with pretensioner must be started in 90 seconds or more after the ignition switch is turned OFF and the battery negative terminal is disconnected.**
- **Carefully read the notices for the ”pretensioner” in the SRS airbag system and front seat outer belt assembly.**

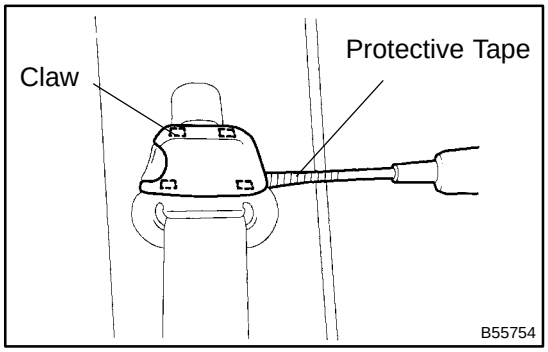

(a) Using a screwdriver, remove the sholder anchor cover.

HINT:

Tape the screwdriver tip before use.

(b) Remove the bolt and disconnect the front seat outer belt (shoulder anchor side).

(c) Using screwdriver, remove the floor anchor cover.

(d) Remove the bolt and disconnect the front seat outer belt assembly RH (floor anchor side).

HINT:

Tape the screwdriver tip before use.

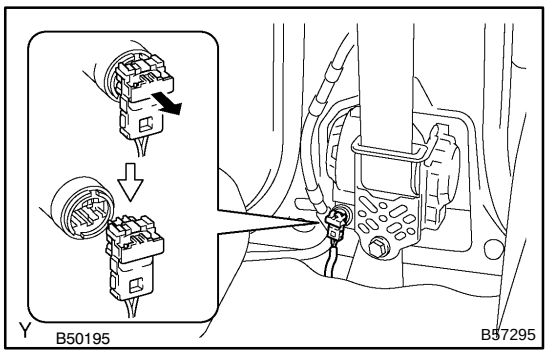

(e) Disconnect the pretensioner connectoras shown in the illustration.

(f) Remove the 2 bolts and front seat outer belt assembly RH.

10. REMOVE CENTER PILLAR GARNISH RH (See page 76–17)

11. REMOVE FRONT SHOULDER BELT ANCHOR ADJUSTER ASSY

(a) Remove the bolt and front shoulder belt anchor adjuster assembly.

12. INSTALL FRONT SHOULDER BELT ANCHOR ADJUSTER ASSY

(a) Install the front shoulder belt anchor adjuster assembly with the bolt.
Torque: 41.2 N·m (420 kgf·cm, 30 ft·lbf)

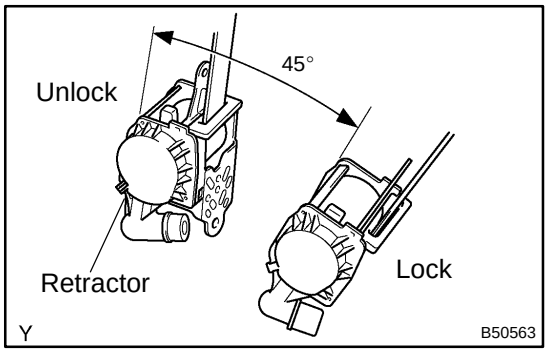

13. INSTALL FRONT SEAT OUTER BELT ASSY RH

NOTICE:

Do not disassemble the retractor.

(a) Check the degree of tilt when beginning to lock the ELR.
(1) Check the belt will not lock within 15° of tilt in all the direction but the belt will lock over 45° of tilt when moving the installed retractor gently.

If the operation is not as specified, replace the front seat outer belt assembly.

(b) Install the retractor with the 2 bolts.
Torque:
4.9 N·m (50 kgf·cm, 43 in.·lbf) for upper bolt
41.2 N·m (420 kgf·cm, 30 ft·lbf) for lower bolt

(c) Install the shoulder anchor with the bolt.
Torque: 41.2 N·m (420 kgf·cm, 30 ft·lbf)

(d) Install the shoulder anchor cover.

(e) Install the floor anchor with the bolt.
Torque: 41.2 N·m (420 kgf·cm, 30 ft·lbf)

(f) Install the floor anchor cover.

(g) Check the ELR lock.

NOTICE:

Check should be perform with the assembly installed.

(1) Check that the belt will lock when pulling out the belt quickly with the belt installed.

If the operation is not as specified, replace the front seat outer belt assembly.

14. INSTALL FRONT SEAT INNER BELT ASSY RH

(a) Install the front seat inner belt assembly RH with the bolt.
Torque: 41.2 N·m (420 kgf·cm, 30 ft·lbf)

REAR SEAT BELT

COMPONENTS

6108G–01

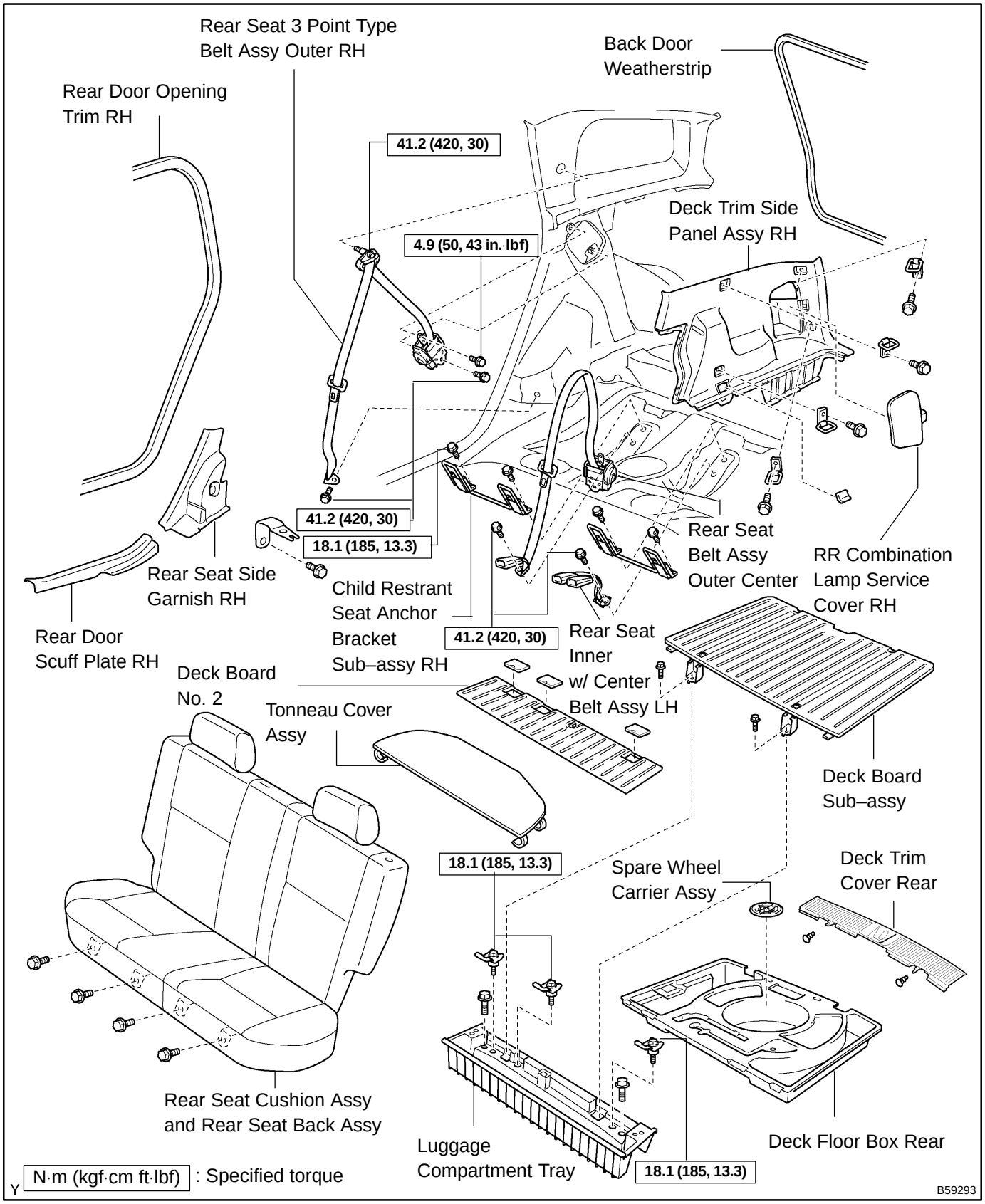

6108H–01

REPLACEMENT

HINT:

Installation is in the reverse order of the removal. But the installation is indicated only when it has a point.

1. **REMOVE REAR DOOR SCUFF PLATE RH**
2. **REMOVE REAR DOOR SCUFF PLATE LH**
3. **REMOVE REAR DOOR OPENING TRIM RH**
4. **REMOVE REAR DOOR OPENING TRIM LH**
5. **REMOVE TONNEAU COVER ASSY**
6. **REMOVE DECK BOARD NO.2 (See page 76–17)**
7. **REMOVE DECK BOARD SUB–ASSY (See page 76–17)**
8. **REMOVE DECK FLOOR BOX REAR (See page 76–17)**
9. **REMOVE LUGGAGE COMPARTMENT TRAY (See page 76–17)**
10. **REMOVE BACK DOOR WEATHERSTRIP**
11. **REMOVE DECK TRIM COVER REAR (See page 76–17)**
12. **REMOVE REAR SEAT CUSHION ASSY AND REAR SEAT BACK ASSY (See page 72–10)**
13. **REMOVE REAR SEAT SIDE GARNISH RH (See page 76–17)**
14. **REMOVE REAR SEAT SIDE GARNISH LH (See page 76–17)**
15. **REMOVE DECK TRIM SIDE PANEL ASSY RH (See page 76–17)**
16. **REMOVE DECK TRIM SIDE PANEL ASSY LH (See page 76–17)**

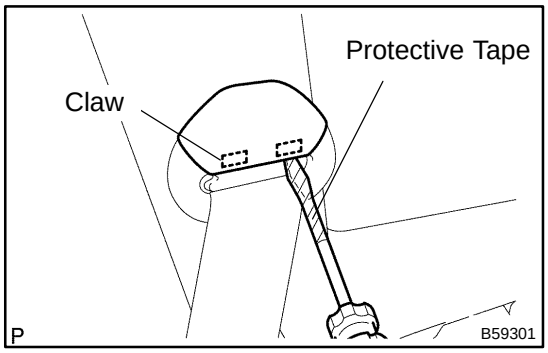

17. **REMOVE REAR SEAT 3 POINT TYPE BELT ASSY OUTER**

(a) Using a screwdriver, remove the sholder anchor cover.

HINT:

Tape the screwdriver tip before use.

(b) Remove the bolt and disconnect the rear seat 3 point type belt assembly outer (shoulder anchor side).

(c) Remove the bolt and disconnect the rear seat 3 point typebelt assembly RH (floor anchor side).

18. **REMOVE REAR SEAT BELT ASSY OUTER CENTER**

(a) Remove the rear seat back board RH (See page 72–10).

(b) Remove the rear seat shoulder belt cover (See page 72–10).

(c) Remove the 2 bolts and rear seat belt assembly outer center.

19. **REMOVE REAR SEAT INNER W/CENTER BELT ASSY LH**

(a) Remove the bolt and the rear seat inner w/center belt assembly LH.

20. **REMOVE CHILD RESTRAINT SEAT ANCHOR BRACKET SUB–ASSY RH**

(a) Remove the 2 bolts and child restraint seat anchor bracket sub–assembly RH.

21. **INSTALL CHILD RESTRAINT SEAT ANCHOR BRACKET SUB–ASSY RH**

(a) Install the child restraint seat anchor bracket sub–assembly RH with the 2 bolts.

Torque: 18.1 N·m (185 kgf·cm, 13.3 ft·lbf)

22. **INSTALL REAR SEAT BELT ASSY OUTER CENTER**

(a) Install the rear seat belt assembly outer center (retractor) with the 2 bolts.

Torque: 41.2 N·m (420 kgf·cm, 30 ft·lbf)

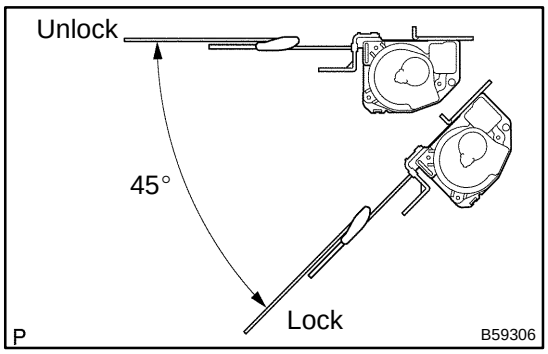

23. INSTALL REAR SEAT BELT ASSY OUTER CENTER

(a) Check the degree of tilt when the belt begins to lock the ELR.

(1) Check the belt will not lock within 15° of tilt in all the direction but the belt will lock over 45° of tilt when moving the installed retractor gently.

If the operation is not as specified, replace the rear seat belt assembly outer center.

(b) Install the rear seat belt assembly outer center with the bolt.

Torque: 41.2 N·m (420 kgf·cm, 30 ft·lbf)

(c) Check the ELR lock.

NOTICE:

Check should be performed with the assembly installed.

(1) Check that the belt will lock when pulling out the belt quickly with the belt installed.

If the operation is not as specified, replace the rear seat belt assembly outer center.

(d) Check the fastening function of the child restraint system.

NOTICE:

Check should be performed with the assembly installed.

(1) Check that the belt cannot be pulled out any more but can be rewound after the belt is fully pulled out.

(2) Check that the belt can be pulled out and rewound after the belt is fully rewound.

If the operation is not as specified, replace the rear seat belt assembly outer center.

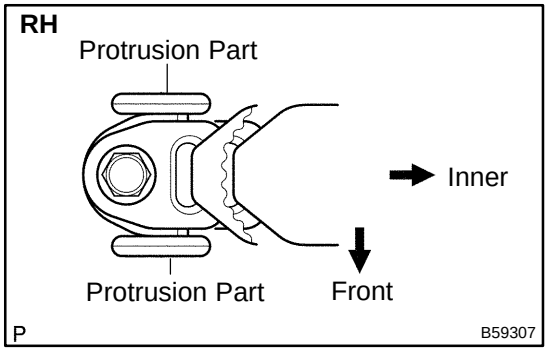

(e) Install the floor anchor and rear seat belt assembly inner with the bolt, as shown in the illustration.

Torque: 41.2 N·m (420 kgf·cm, 30 ft·lbf)

NOTICE:

Do not make the anchor part run onto the protrusion part of the floor panel.

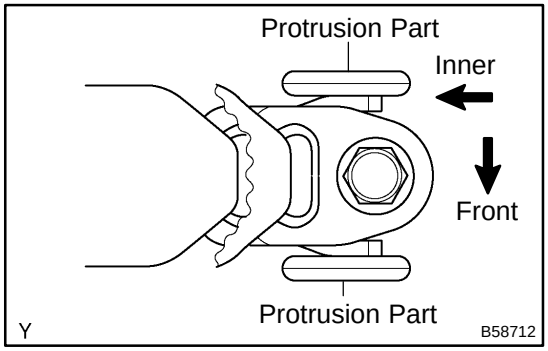

24. INSTALL REAR SEAT INNER W/CENTER BELT ASSY LH

(a) Install the rear seat inner w/center belt assembly LH with the bolt, as shown in the illustration.

Torque: 41.2 N·m (420 kgf·cm, 30 ft·lbf)

NOTICE:

- **Do not make the anchor part run onto the protrusion part of the floor panel.**
- **Do not disassemble the retractor.**

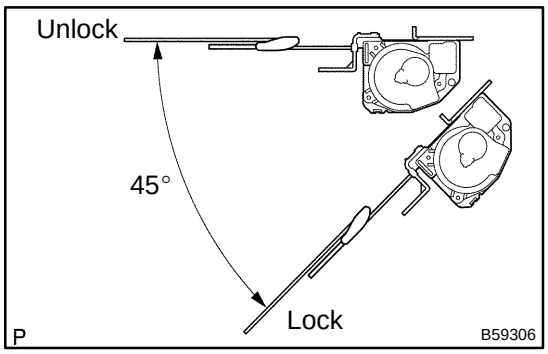

25. INSTALL REAR SEAT 3 POINT TYPE BELT ASSY OUTER

NOTICE:

Do not disassemble the retractor.

(a) Check the degree of tilt when the belt begins to lock the ELR.

(1) Check the belt will not lock within 15° of tilt in all the direction but the belt will lock over 45 degrees of tilt when moving the installed retractor gently.

If the operation is not as specified, replace the rear seat belt assembly outer.

(b) Install the rear seat belt assembly outer (retractor side) with the bolt.

Torque:

4.9 N·m (50 kgf·cm, 43 in.·lbf) for upper bolt

41.2 N·m (420 kgf·cm, 30 ft·lbf) for lower bolt

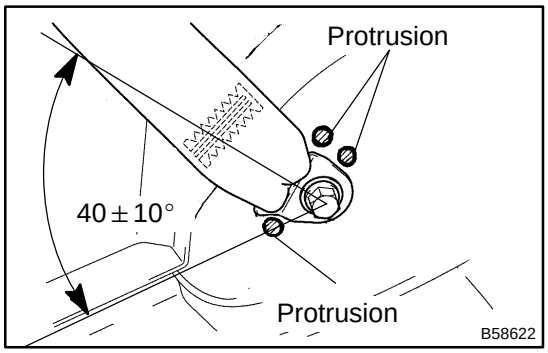

(c) Install the rear seat belt assembly outer (floor anchor side) with the bolt.

Torque: 41.2 N·m (420 kgf·cm, 30 ft·lbf)

NOTICE:

Do not make the anchor part run onto the protrusion part of the floor panel.

(d) Check the ELR lock.

NOTICE:

Check should be performed with the assembly installed.

(1) Check that the belt will lock when pulling out the belt quickly with the belt installed.

If the operation is not as specified, replace the rear seat belt assembly outer.

(e) Check the fastening function of the child restraint system.

NOTICE:

Check should be performed with the assembly installed.

(1) Check that the belt cannot be pulled out any more but can be rewound after the belt is fully pulled out.

(2) Check that the belt can be pulled out and rewound after the belt is fully rewound.

If the operation is not as specified, replace the rear seat belt assembly outer.

26. INSTALL REAR SEAT CUSHION ASSY AND REAR SEAT BACK ASSY (See page 76–17)

650HB–01

ADJUSTMENT

1. PUT VEHICLE THESE CONDITIONS

(a) Tire inflation pressure is the specified value (See page 28–1).

(b) Start the engine.

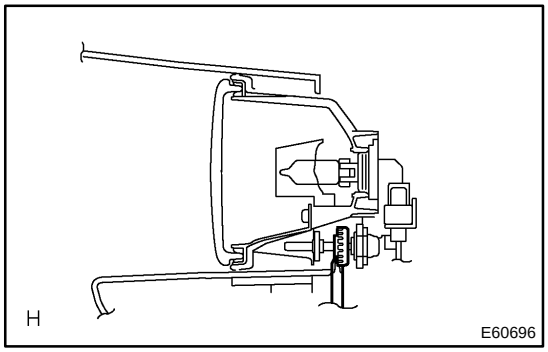

2. ADJUST FOG LIGHT AIM

(a) The fog light aim can be adjusting by moving the aiming screw in the vertical direction.

HINT:

The optical aim moves upward when turning a screwdriver clockwise, while it moves downward when turning a screwdriver counterclockwise.

3. CHECK FOG LIGHT AIM

FOG LAMP ASSY LH

650HA–01

REPLACEMENT

1. REMOVE FRONT BUMPER COVER(See page 76–2)

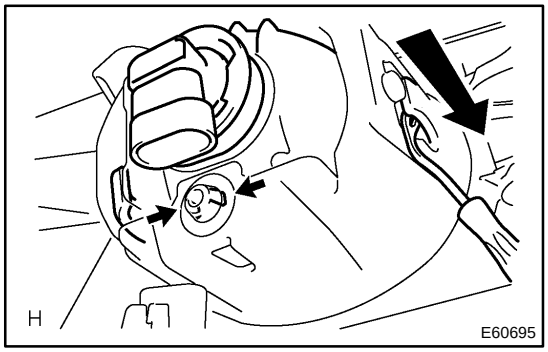

2. REMOVE FOG LAMP ASSY LH

(a) Disconnect the connector.

(b) Using a clipremover, release the 2 claws.

(c) Press the 2 claws and release the 2claws, and remove the foglight assy LH.

3. PUT VEHICLE THESE CONDITIONS(See page 65–17)

4. ADJUST FOG LIGHT AIM(See page 65–17)

5. CHECK FOG LIGHT AIM(See page 65–17)

REAR COMBINATION LAMP ASSY LH

650HC–01

REPLACEMENT

1. REMOVE REAR COMBINATION LAMP ASSY LH

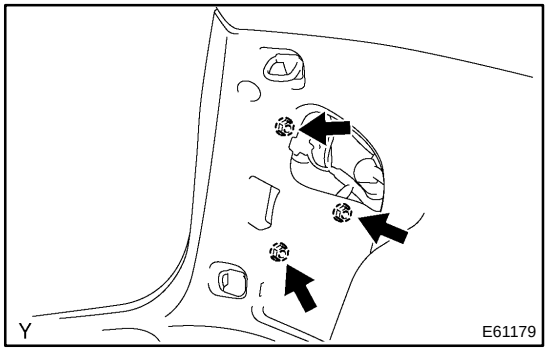

(a) Remove the service hole cover LH.
(b) Disconnect the connector and remove the 3 nuts.

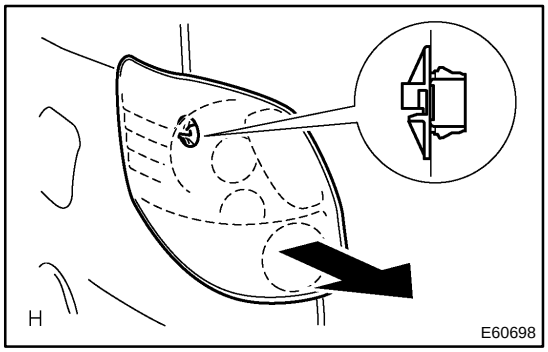

(c) Pull out the rear combination light assy LH to the back of the vehicle, and remove.

LICENSE PLATE LAMP ASSY

650HD–01

REPLACEMENT

1. **REMOVE BACK DOOR TRIM BOARD ASSY(See page 75–28)**
2. **REMOVE BACK DOOR OUTSIDE HANDLE(See page 75–28)**
3. **REMOVE BACK DOOR LOCK CYLINDER & KEY SET(See page 75–28)**
4. **REMOVE BACK DOOR GARNISH SUB–ASSY OUTSIDE(See page 75–28)**

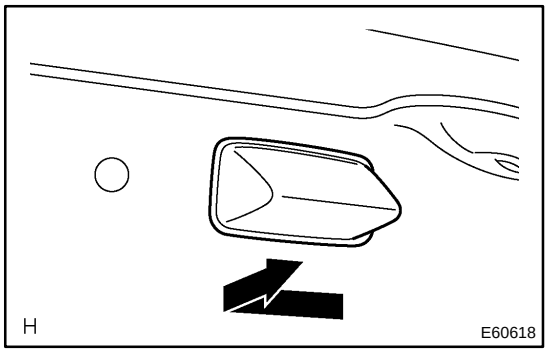

5. REMOVE LICENSE PLATE LAMP ASSY

(a) Pull the license plate light assy to the side of vehicle as shown in the illustration and release the claw.

(b) Disconnect the connector and remove the license plate light assy.

CENTER STOP LAMP ASSY

650HE–01

REPLACEMENT

1. REMOVE CENTER STOP LAMP ASSY

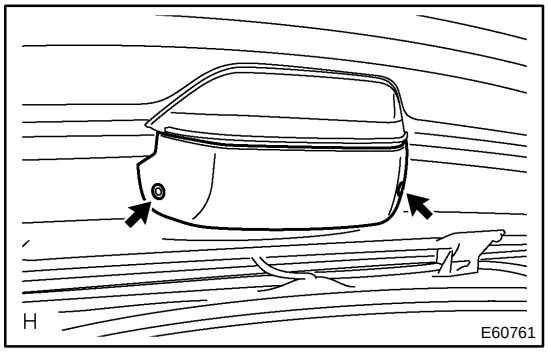

(a) Remove the 2 clips and center stop light cover.

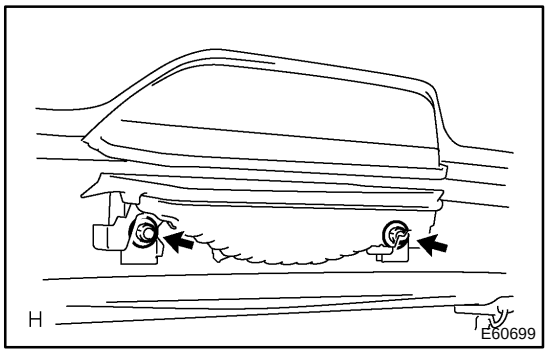

(b) Remove the 2 bolts.
(c) Disconnect the connector and remove the center stop light assy.

HEADLAMP DIMMER SWITCH ASSY

650HF–01

REPLACEMENT

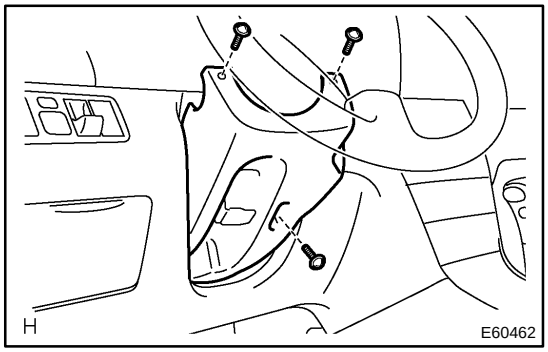

1. REMOVE STEERING COLUMN COVER LWR

(a) Remove 3 screws and steering column cover LWR.

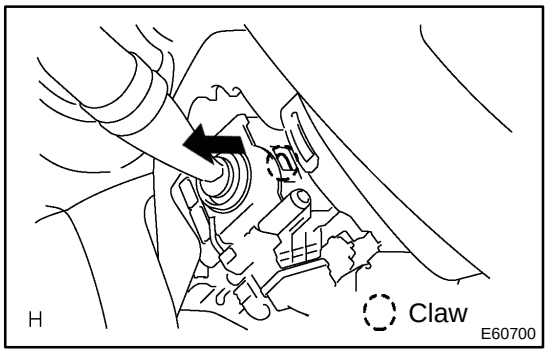

2. REMOVE HEADLAMP DIMMER SWITCH ASSY

(a) Disconnect the connector.

(b) Release the claw and pull out the head light dimmer switch assy.

650H9–01

ADJUSTMENT

1. HEADLIGHT AIM ONLY

(a) Place the vehicle in the following conditions.

- The area around the headlight is not deformed.
- The vehicle is parked on a level surface.
- Tire inflation pressure is in the specified value (See page 28–1).
- A driver is in the driver's seat and the vehicle is in a state ready for driving (with a tank full).
- The vehicle has been bounced several times.

(b) Check the headlight aiming.

(1) Prepare a thick white paper.

(2) Stand the paper perpendicular to the ground at the position 9.84 ft away from the headlights.

(3) Ensure that the center line of the vehicle and the paper face forms a 90–degree angle as shown in the illustration.

(4) Draw a horizontal line (H line) on the paper, showing where the headlights should strike.

(5) Draw a vertical line (V line) to where the center line of the vehicle is to be.

(6) Draw 2 vertical lines to where the both headlights should strike (V RH and V LH lines).

(7) Draw a horizontal line (by connecting the both low beam center marks) to where the headlights should strike (H RH and H LH lines).

(8) Take appropriate measures to prevent any influence of other lights.

(9) Set the headlights leveling position to "0" position and adjust the angle of the headlight axis.

HINT:

The H RH and H LH line is 0.4° below the horizontal line (H line) of the light axis.

(10) Start the engine.

(11) Turn the headlights ON.

(12) Check that the headlights properly strike the position shown in the illustration.

(13) If not, adjust the lights in the vertical direction.

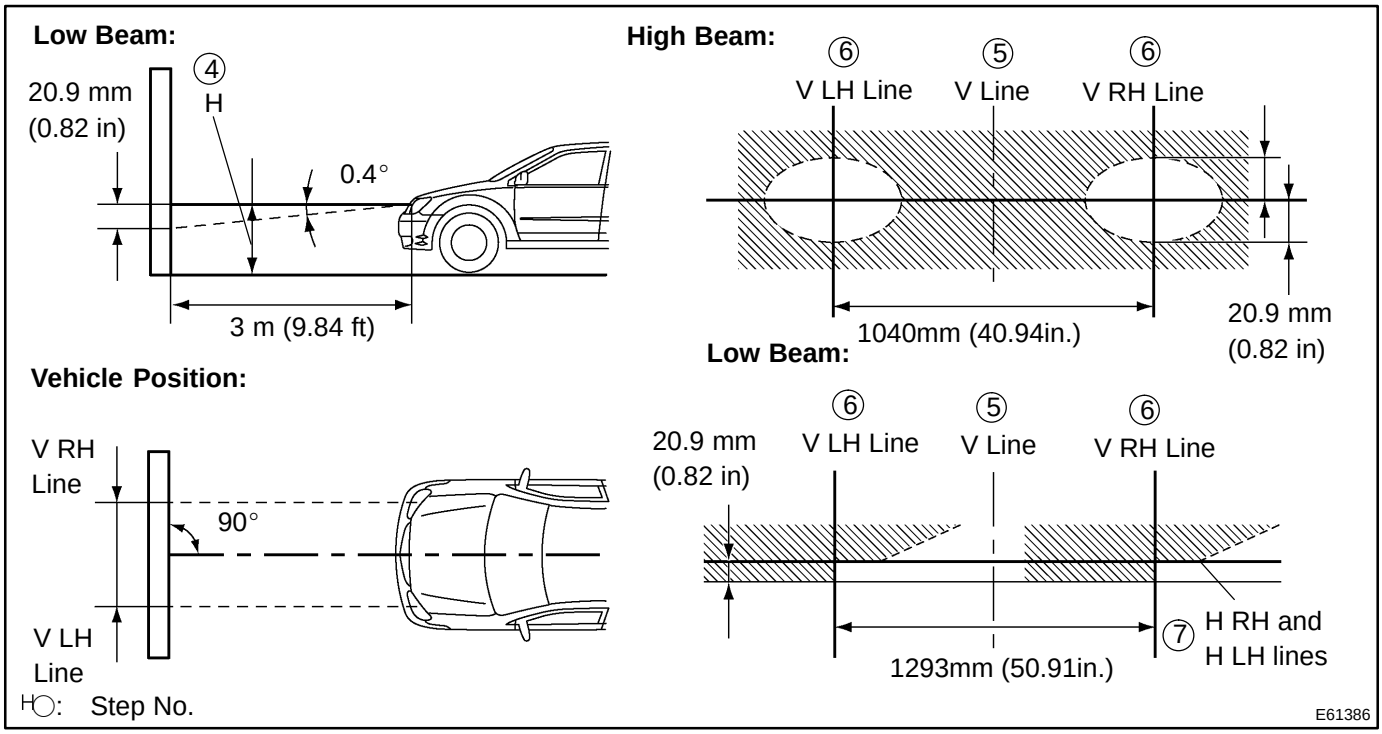

HINT:

- As shown in the illustration, adjust each aim of the RH and LH lights.
- Since the horizontal direction is impossible to adjust, the value of the ”Low Beam” aim is reference value.

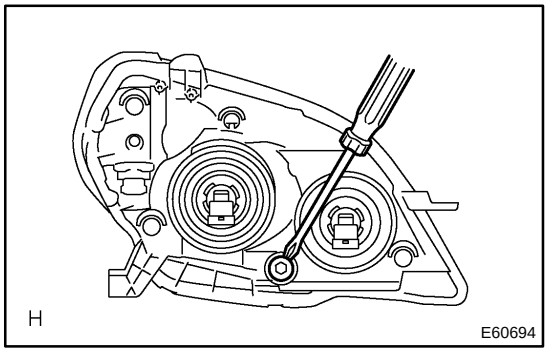

(c) When adjusting the headlight aim in the vertical direction: Using adjusting bolt, adjust the headlight aim to be within the specified range.

HINT:

The optical aim moves upward when turning a screwdriver clockwise, while it moves downward when turning a screwdriver counterclockwise.

LH HEADLAMP ASSY

COMPONENTS

650H7–01

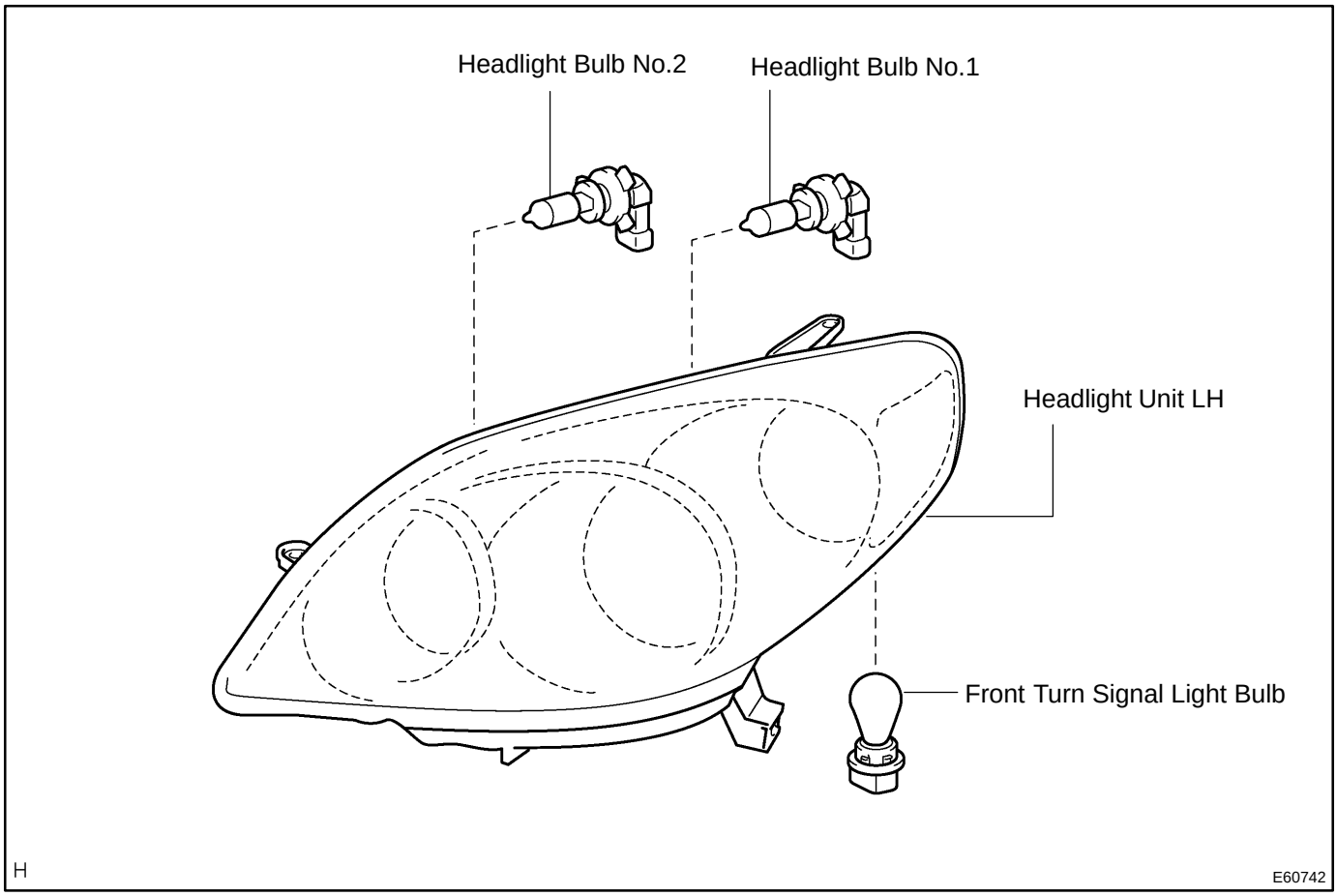

650H8–01

REPLACEMENT

HINT:

COMPONENTS: See page 65–12

1. REMOVE FRONT BUMPER COVER(See page 76–2)

2. REMOVE LH HEADLAMP ASSY

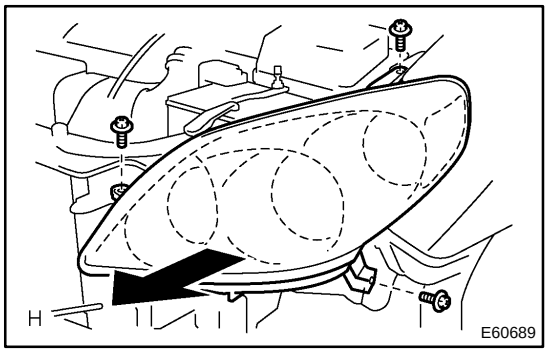

(a) Remove the 3 bolts.

(b) Pull out the headlight assy LH forward, then disconnect the bracket of body side.

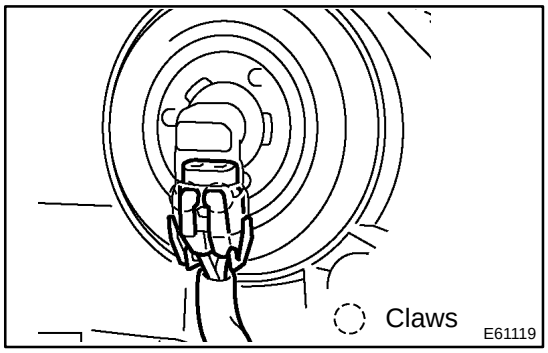

(c) Release the 2 claws and disconnect the connectors as shown in the illustration, and remove the headlight assy LH.

3. PUT VEHICLE THESE CONDITIONS(See page 65–17)

4. ADJUST FOG LIGHT AIM(See page 65–17)

5. HEADLIGHT AIM ONLY(See page 65–14)

650HJ–02

INSPECTION

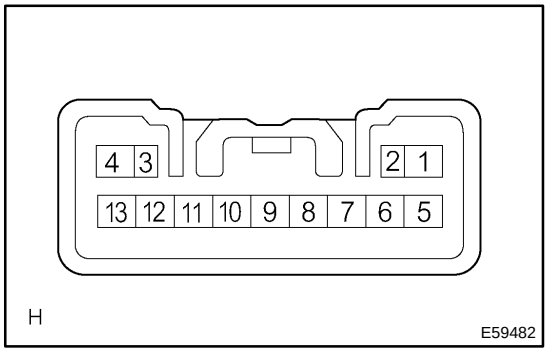

1. HEADLAMP DIMMER SWITCH ASSY

(a) Inspect light control switch continuity.

(1) Check that there is continuity between terminals at each switch position as shown in the chart.

Standard:

Switch operation	Tester connection	Specified condition
OFF	10 – 11 – 12 – 13	No continuity
TAIL	10 – 13	Continuity
HEAD	10 – 13	Continuity
HEAD	11 – 12	Continuity

(b) Inspect headlight dimmer switch continuity.

(1) Check that there is continuity between terminals at each switch position as shown in the chart.

Standard:

Switch operation	Tester connection	Specified condition
FLASH	8 – 11, 9 – 11	Continuity
LOW BEAM*1	9 – 11	Continuity
LOW BEAM*2	8 – 11, 9 – 11	No continuity
HIGH BEAM	9 – 11	Continuity

*1: w/ Fog Light

*2: w/o Fog Light

(c) Inspect turn signal switch continuity.

(1) Check that there is continuity between terminals at each switch position as shown in the chart.

Standard:

Switch operation	Tester connection	Specified condition
Right turn	6 – 7	Continuity
Neutral	5 – 6 – 7	No continuity
Left turn	6 – 5	Continuity

(d) w/ Fog light:

Inspect front fog light switch continuity.

(1) Check that there is continuity between terminals at each switch position as shown in the chart.

Standard:

Switch operation	Tester connection	Specified condition
OFF	2 – 4	No continuity
ON	2 – 4	Continuity

2. BACK UP LAMP SWITCH ASSY

(a) Inspect back up lamp switch continuity.

(1) Check that there is continuity between terminals when switch operation.

Standard:

OFF (When ball is not pressed): No continuity

ON (when ball is pressed): Continuity

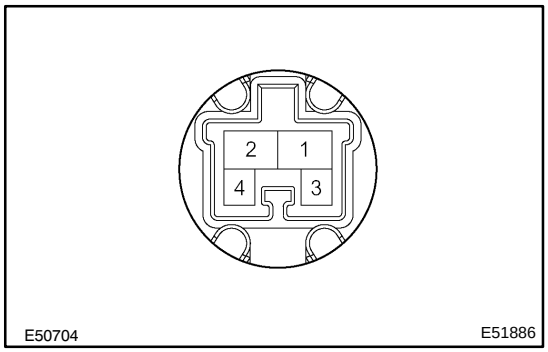

3. STOP LAMP SWITCH ASSY

(a) Inspect stop lamp switch assy continuity.

(1) Disconnect the stop lamp switch assy connector.

(2) Check that there is continuity between terminal 1 and 2.

Standard:

Switch operation	Tester connection	Specified condition
ON	1 – 2	Continuity
OFF	1 – 2	No continuity

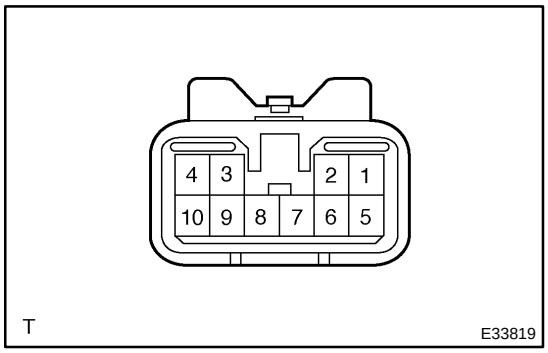

4. HAZARD WARNING SIGNAL SWITCH ASSY

(a) Inspect hazard warning signal switch assy continuity.

(1) Check that there is continuity between terminal 1 and 4 when switch is operated.

Standard:

Switch operation	Tester connection	Specified condition
ON	1 – 4	Continuity
OFF	1 – 4	No continuity

(b) Inspect illumination operation.

(1) Connect the positive (+) lead from the battery to terminal 8 and negative (–) lead to terminal 9, then check that the illumination comes on.

5. FRONT DOOR COURTESY LAMP SWITCH ASSY

(a) Inspect front door courtesy lamp switch assy continuity.

(1) Check that there is continuity between terminal 1 and body ground when switch is operated.

Standard:

ON (When shaft is pressed): No continuity

OFF (When shaft is not pressed): Continuity

6. REAR DOOR COURTESY LAMP SWITCH ASSY

(a) Inspect rear door courtesy lamp switch assy continuity.

(1) Check that there is continuity between terminal 1 and body ground when switch is operated.

Standard:

ON (When shaft is pressed): No continuity

OFF (When shaft is not pressed): Continuity

7. BACK DOOR COURTESY LAMP SWITCH ASSY

(a) Inspect back door courtesy lamp switch assy continuity.

(1) Check that there is continuity between terminal 1 and bracket when switch is operated.

Standard:

ON (When shaft is pressed): No continuity

OFF (When shaft is not pressed): Continuity

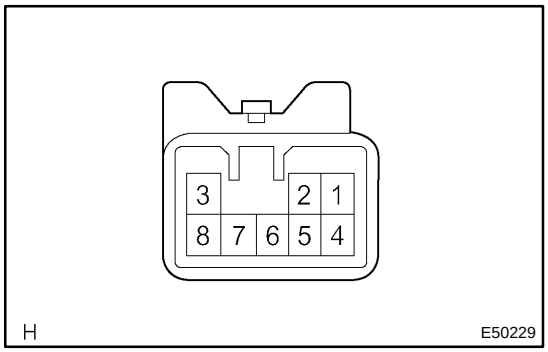

8. MAP LAMP ASSY

(a) Inspect map lamp continuity.

(1) Check that there is continuity between terminal 1 and 3 when switch is operated.

Standard:

Switch operation	Tester connection	Specified condition
ON	1 – 3	Continuity
OFF	1 – 3	No continuity

9. ROOM LAMP ASSY NO.1

(a) Inspect room lamp assy No. 1 continuity.

(1) Check that there is continuity when switch is operated.

Standard:

ON: Continuity

OFF: No continuity

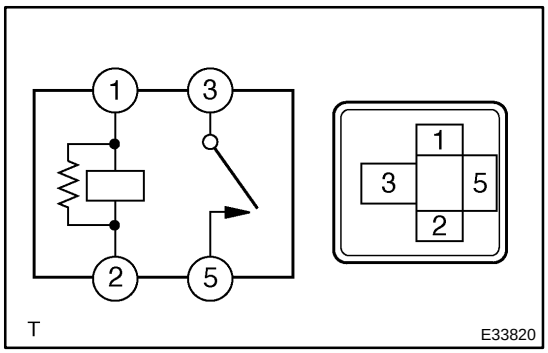

10. HEADLAMP RELAY

(a) Inspect headlamp relay continuity.

(1) Check that there is continuity between terminals.

Standard:

Tester connection	Specified condition
1 – 2	Continuity
3 – 5	Continuity

(2) Apply battery voltage (10 – 14 V) between terminal 1 and 2, then check that there is continuity between terminal 3 and 5.

Standard: There is continuity.

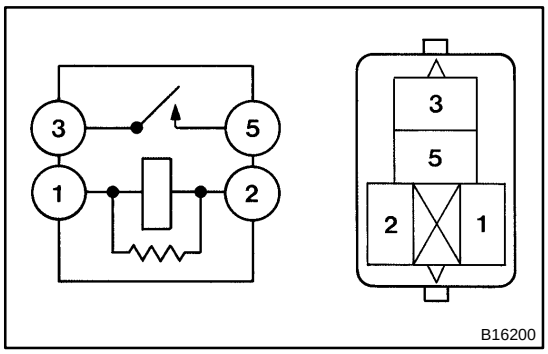

11. FOG LAMP RELAY

(a) Inspect fog lamp relay continuity.

(1) Check that there is continuity between terminals.

Standard:

Tester connection	Specified condition
1 – 2	Continuity
3 – 5	Continuity

(2) Apply battery voltage (10 – 14 V) between terminal 1 and 2, then check that there is continuity between terminal 3 and 5.

Standard: There is continuity.

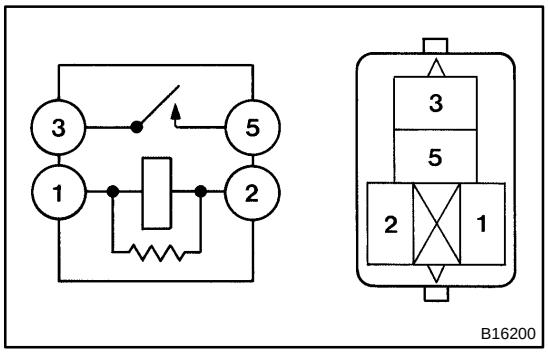

12. TAILLAMP RELAY

(a) Inspect taillamp relay continuity.

(1) Check that there is continuity between terminals.

Standard:

Tester connection	Specified condition
1 – 2	Continuity
3 – 5	Continuity

(2) Apply battery voltage (10 – 14 V) between terminal 1 and 2, then check that there is continuity between terminal 3 and 5.

Standard: There is continuity.

13. INTEGRATION RELAY

(a) Check illuminated entry operation.

(1) Connect the positive (+) lead from the battery to terminal A–1 and negative (–) lead to terminal A–9.

(2) Check that the battery voltage (10 – 14 V) generates between terminal B–3 and A–9, then connect the negative (–) lead from the battery to terminal A–5 and A–6.

(3) Disconnect the negative (–) lead from the battery to terminal A–5 and A–6, or connect the positive (–) lead from the battery to terminal B–18 or B–19, or connect the positive (+) lead from the battery to terminal A–10, then check that there is no voltage between terminal A–12 and A–9.

(b) Inspect battery saver operation.
   (1) Connect the positive (+) lead from the battery to terminal A–1 and negative (–) lead to terminal A–9.
   (2) Connect the negative (–) lead from the battery to terminal A–5 and A–6, then check that the battery voltage (10 – 14 V) generates between terminal A–12 and A–9.
   (3) After 20 min., check that there is no voltage between terminal A–12 and A–9.

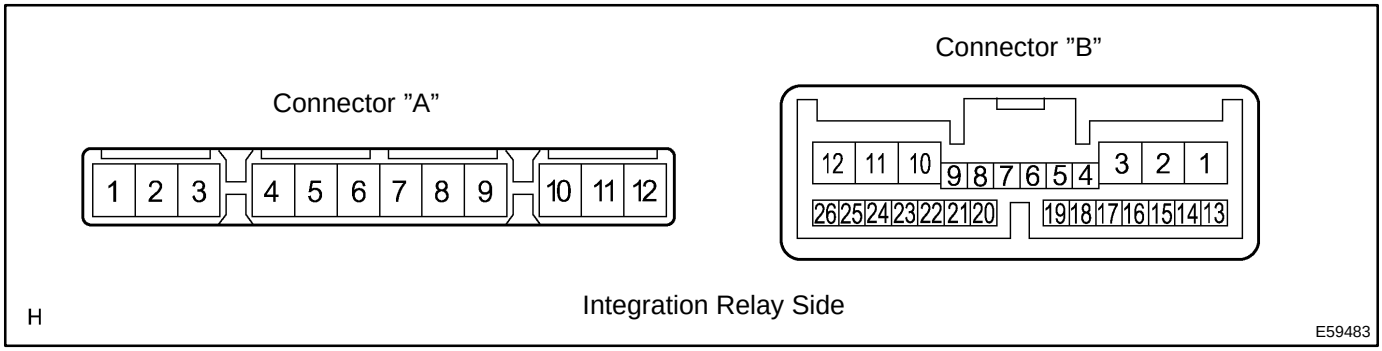

650HI–02

ON–VEHICLE INSPECTION

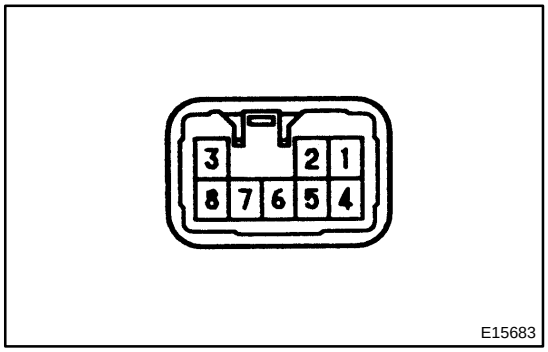

1. INSPECT TURN SIGNAL FLASHER CIRCUIT

(a) Disconnect the connector from the turn signal flasher and inspect the connector on wire harness side as shown in the chart.

Standard:

Tester connection	Condition	Specified condition
7 – Ground	Constant	Continuity
1 – Ground	Turn ignition switch ON	Battery positive voltage
1 – Ground	Turn ignition switch OFF	No voltage
4 – Ground	Constant	Battery positive voltage

(b) Connect the connector to the turn signal flasher and inspect the wire harness side connector from the back side as shown in the chart.

Standard:

Tester connection	Condition	Specified condition
2 – Ground	Hazard switch OFF → ON	0 V → 0 ⇔ 9 V (60 to 120 time per minute)
2 – Ground	Turn signal switch (right turn) OFF → ON	0 V → 0 ⇔ 9 V (60 to 120 time per minute)
3 – Ground	Hazard switch OFF → ON	0 V → 0 ⇔ 9 V (60 to 120 time per minute)
3 – Ground	Turn signal switch (left turn) OFF → ON	0 V → 0 ⇔ 9 V (60 to 120 time per minute)
5 – Ground	Turn signal switch (left turn) OFF → ON	Above 9 V → 0 V
6 – Ground	Turn signal switch (right turn) OFF → ON	Above 9 V → 0 V
8 – Ground	Hazard switch OFF → ON	Above 9 V → 0 V

Wire Harness Side:

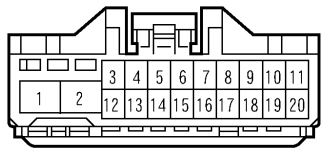

H

E59551

2. INSPECT DAYTIME RUNNING LIGHT MAIN RELAY CIRCUIT

(a) Disconnect the connector from the relay and inspect the connector on the wire harness side.

Standard:

Tester connection	Condition	Specified condition
2, 5, 6 – Ground	Constant	Continuity
1, 7 – Ground	Light control switch OFF or TAIL	No continuity
	Light control switch HEAD	Continuity
16 – Ground	Headlight dimmer switch LOW beam	No continuity
	Headlight dimmer switch HI beam or FLASH	Continuity
10 – Ground	Brake fluid level warning switch OFF	No continuity
	Brake fluid level warning switch ON	Continuity
11 – Ground	Parking brake switch OFF (Parking brake lever sub–assy released)	No continuity
	Parking brake switch ON (Parking brake lever sub–assy depressed)	Continuity
15 – Ground	Light control switch OFF	No continuity
	Light control switch TAIL or HEAD	Continuity
1 – Ground	Constant	No voltage
	Ground terminal 6	Battery positive voltage
8 – Ground	Engine stopped	No voltage
	Engine running	Battery positive voltage
4 – Ground	Fog light switch ON	Battery positive voltage
	Constant	No voltage
13 – Ground	Constant	No voltage
	Ground terminal 6	Battery positive voltage
3 – Ground	Constant	Battery positive voltage
12 – Ground	Ignition switch ON or START	Battery positive voltage
	Ignition switch LOCK or ACC	No voltage

If circuit is specified, try replacing the relay with a new one.
If circuit is not as specified, inspect the circuits connected to other parts.

3. ILLUMINATED ENTRY SYSTEM OPERATION CHECK

HINT:

The lights that is lit in the illuminated entry system are room lamp assy No.1 (center and rear) and key cylinder lamp.

(a) Turn the ignition switch to OFF, close all the doors, and set the driver side door in the lock condition.
(b) Unlock the driver side door and open any door, and check that the lights go on. Close the door and check that the lights go off in about 15 seconds.
(c) Turn the ignition switch to ON and open and close any door. Check that the light goes off immediately.
(d) Turn the ignition switch to OFF.
(e) Open and close any door to turn on the lights. Before the lights go off in about 15 seconds, turn the ignition switch to ON. Check that the lights go off immediately.
(f) Turn the ignition switch to OFF.
(g) Open and close any door to turn on the lights. Before the lights go off in about 15 seconds, lock the driver side door. Check that the lights go off immediately.

LIGHTING SYSTEM

650HG–02

PRECAUTION

1. PRECAUTION OF HEADLAMP BULB REPLACEMENT

(a) If the adhered oil is left on the halogen lamp surface, the lamp's service life is shortened as it becomes hot when it is turned on.

(b) Since the internal pressure of a halogen lamp is high, dropping, hitting or damaging the bulb may cause the glass to scatter. Therefore, handle it with great care.

(c) When replacing bulb, do not remove the one until a new bulb is prepared.
Because if it is left being removed for a long period of time, the lens may be covered with dirt or moisture.

(d) For replacement, be sure to use a bulb of the same wattage.

(e) Firmly reinstall the socket after bulb replacement. Otherwise, cloudy lens or invasion by water will be caused.

650HH–02

PROBLEM SYMPTOMS TABLE

HINT:

Use the table below to help you find the cause of the problem. The numbers indicate the priority of the likely cause of the problem. Check each part in order. If necessary, replace these parts.

1. HEADLAMP AND TAIL LAMP

Symptom	Suspect Area	See page
Low beam does not come on (One side).	1. Bulb 2. HEAD RH LWR fuse or HEAD LH LWR fuse 3. Wire harness	– – –
Low beam does not come on (All).	1. Headlamp dimmer switch 2. Daytime running light relay 3. Wire harness	65–7 65–7 –
High beam does not come on (One side).	1. Bulb 2. HEAD RH UPR fuse or HEAD LH UPR fuse 3. Wire harness	– – –
High beam does not come on (All).	1. DIMMER relay 2. Headlamp dimmer switch 3. Daytime running light relay 4. Wire harness	– 65–7 65–4 –
”Flash” does not operate (All).	1. Headlamp dimmer switch 2. Wire harness	65–7 –
Headlamp is dark.	1. Bulb 2. Wire harness	– –
Only one tail lamp comes on.	1. Bulb 2. Wire harness	– –
Both tail lamps do not come on (Headlamps are normal).	1. TAIL fuse 2. TAIL relay (USA only) 3. Light control switch 4. Daytime running light relay (USA only) 5. Wire harness	– 65–7 65–7 65–4 –
Both tail lamps do not come on (Headlamps do not come on).	1. Light control switch 2. Wire harness	65–7 –
Headlamp does not come on with engine running and light control switch OFF.	1. HEAD relay 2. Generator 3. Parking brake switch 4. Daytime running light relay 5. Wire harness	65–7 – – 65–4 –

2. FRONT FOG LAMP

Symptom	Suspect Area	See page
Front fog lamps do not come on with light control switch in the HEAD position (Headlamps are normal).	1. FOG fuse 2. FOG relay 3. Front fog lamp switch 4. Wire harness	– 65–7 65–7 –
Only one front fog lamp does not come on.	1. Bulb 2. Wire harness	– –

3. TURN SIGNAL AND HAZARD WARNING

Symptom	Suspect Area	See page
”Hazard” and ”Turn” do not come on.	1. HAZARD fuse 2. Turn signal flasher relay 3. Wire harness	– 65–4 –
Hazard warning lamp does not come on. (Turn is normal)	1. Hazard warning signal switch assy 2. Wire harness	65–7 –
Turn signal does not come on. (Hazard is normal)	1. Turn signal switch 2. Wire harness	65–4 –
Turn signal does not come on in one direction.	1. Turn signal switch 2. Wire harness	65–4 –
Only one bulb does not come on.	1. Bulb 2. Wire harness	– –

4. STOP LAMP

Symptom	Suspect Area	See page
Both stop lamps do not come on.	1. STOP fuse 2. Stop lamp switch 3. Wire harness	– 65–7 –
Stop lamp always remains ON.	1. Stop lamp switch 2. Wire harness	65–7 –
Stop lamp does not come on (One side).	1. Bulb 2. Wire harness	– –

5. BACK UP LAMP

Symptom	Suspect Area	See page
Both back up lamps do not come on.	1. GAUGE fuse 2. Back up lamp switch (M/T) or Park/Neutral Position SW (A/T) 3. Wire harness	– 65–7 or 05–410 –
Both back up lamps always remain ON.	1. Back up lamp switch (M/T) or Park/Neutral Position SW (A/T) 2. Wire harness	65–7 or 05–410 –
Back up lamp does not come on (One side).	1. Bulb 2. Wire harness	– –

6. ROOM LAMP

Symptom	Suspect Area	See page
Room lamp assy No. 1 does not come on.	1. Bulb 2. Wire harness	– –

REAR WIPER MOTOR ASSY

66078–01

REPLACEMENT

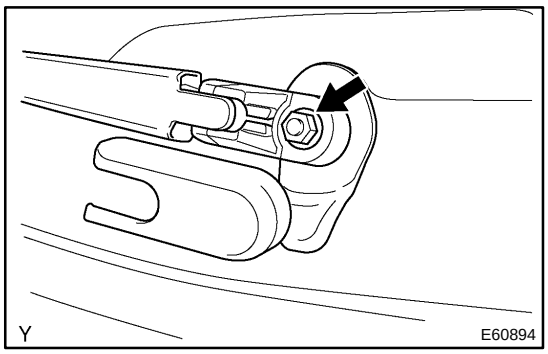

1. REMOVE REAR WIPER ARM ASSY

(a) Remove the rear wiper arm cover.

(b) Remove a nut and rear wiper arm.

2. REMOVE REAR WIPER LINK CAP

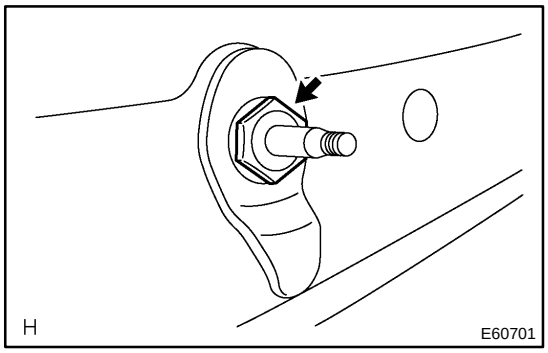

3. REMOVE W/WASHER PACKING NUT REAR WIPER LINK PIVOT

(a) Using a deep socket wrench (24mm), remove the w/ washer packing nut rear wiper link pivot.

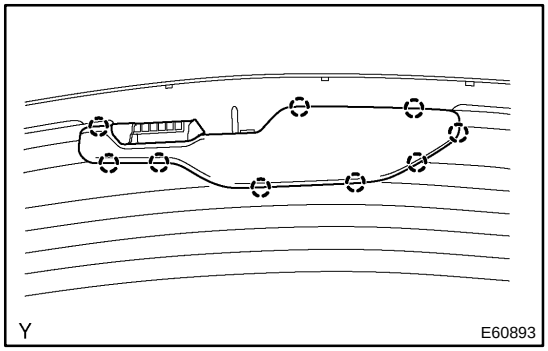

4. RR WIPER MOTOR COVER

(a) Open the back door glass.

(b) Using a screwdriver, release the 9 claws and remove the rear wiper motor cover.

HINT:

Tape the screwdriver tip before use.

5. REMOVE REAR WIPER MOTOR ASSY

(a) Disconnect the 2 rear defogger connectors.

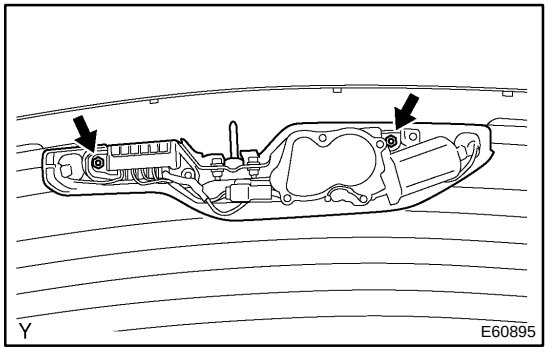

(b) Remove the 2 nuts and rear wiper motor & bracket assy with shaft cover assy.

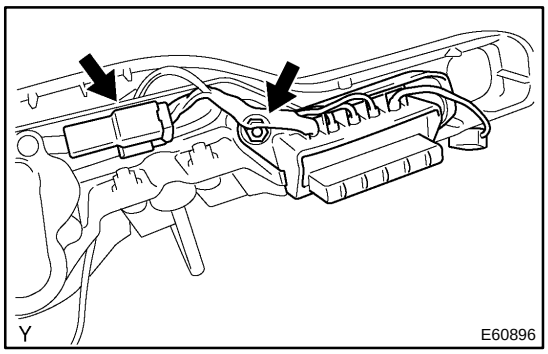

(c) Disconnect the connector.
(d) Remove a nut and junction switch.

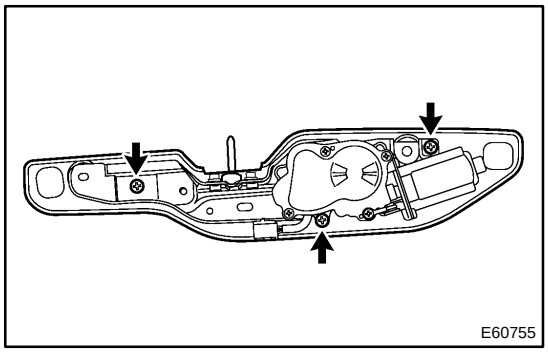

(e) Remove the 3 screws and rear wiper motor & bracket assy

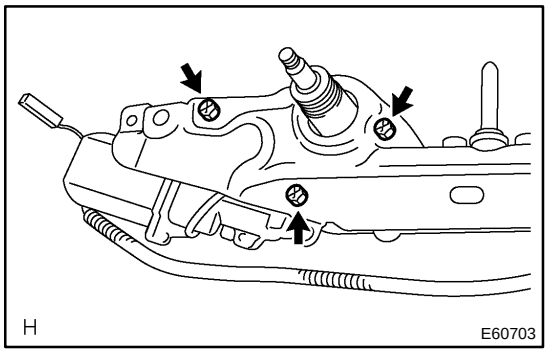

(f) Remove the 3 bolts and rear wiper motor assy.

6. REMOVE REAR WIPER MOTOR GROMMET

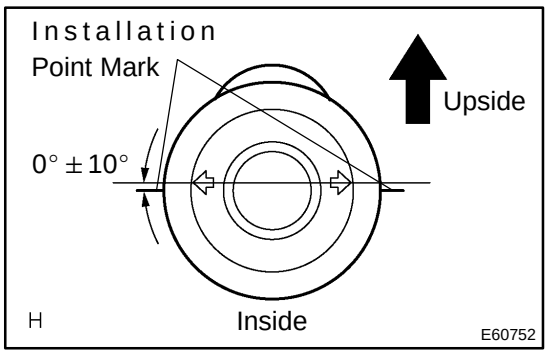

7. INSTALL REAR WIPER MOTOR GROMMET

(a) Install the rear wiper motor grommet as shown in the illustration.

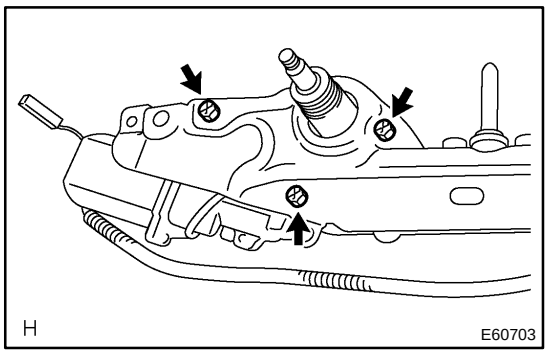

8. INSTALL REAR WIPER MOTOR ASSY

(a) Install the rear wiper motor assy with 3 bolts.
Torque: 5.5 N·m (56 kgf·cm, 49 in.·lbf)

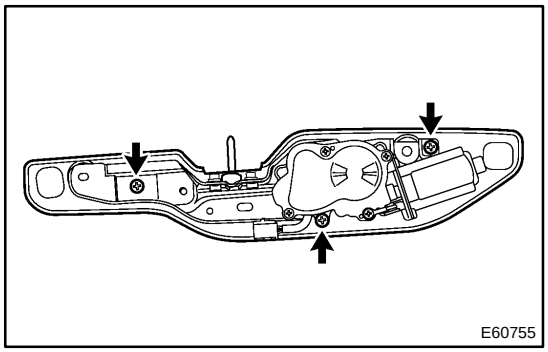

(b) Install the rear wiper motor & bracket with 3 screws.

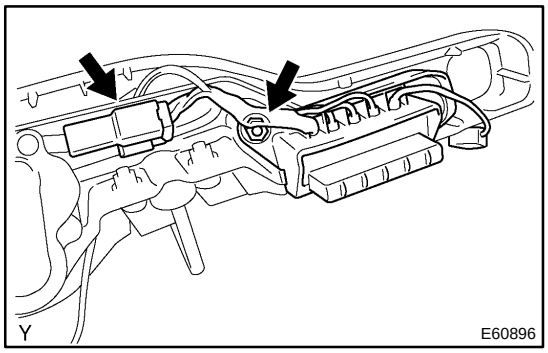

(c) Connect the connector.
(d) Install the junction switch with nut.
(e) Connect the 2 rear defogger connectors.

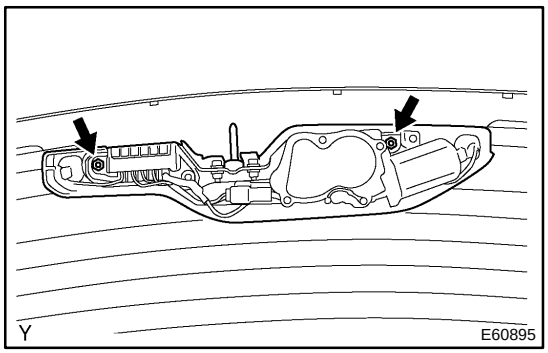

(f) Install the rear wiper motor & bracket assy with shaft cover assy with the 2 nuts.
Torque: 5.5 N·m (56 kgf·cm, 49 in.·lbf)

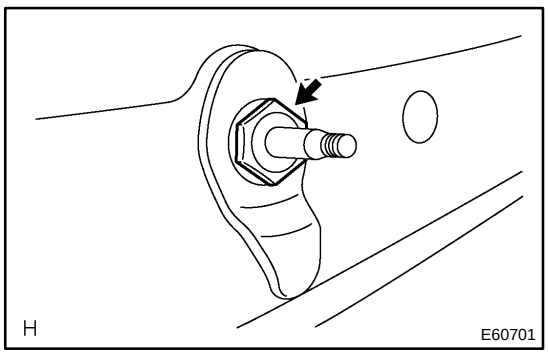

9. INSTALL W/WASHER PACKING NUT REAR WIPER LINK PIVOT

(a) Using a deep socket wrench (24mm), install the w/washer packing nut rear wiper link pivot with a nut.
Torque: 7.0 N·m (71 kgf·cm, 62 in.·lbf)

10. INSTALL REAR WIPER ARM ASSY

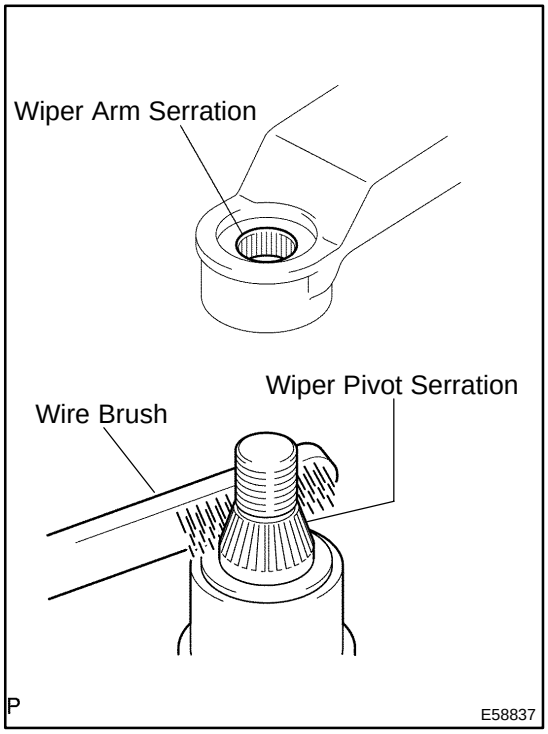

(a) Scrape off the serration part of the wiper arm with a round file or equivalent.

(b) Clean the rear wiper pivot serration with the wire brush.

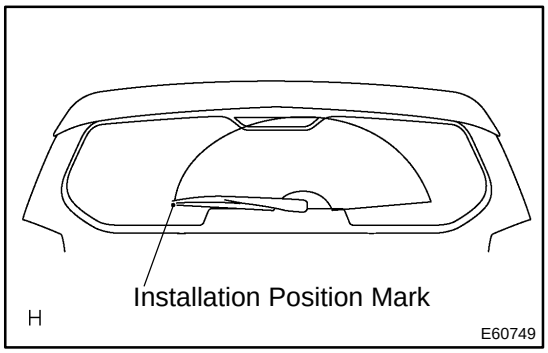

(c) Stop the rear wiper motor assy at the automatic stop position. Install the rear wiper arm at the position as shown in the illustration.

Torque: 5.5 N·m (56 kgf·cm, 49 in.·lbf)

HINT:

Hold down the arm hinge with hand to fasten a nut.

(d) Operate the rear wiper while running the water or the washer fluid over the window, and check the wiping condition and that the rear wiper does not hit against the vehicle body.

REAR WIPER RUBBER

66079–01

REPLACEMENT

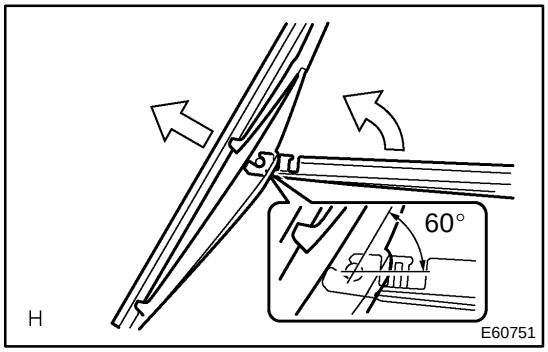

1. REMOVE RR WIPER BLADE

(a) Raise the rear wiper blade to the position as shown in the illustration, to the extent that the meshing of the claw is disengaged with the click sound.

NOTICE:

Be careful not to break the claw.

(b) Pull straight the rear wiper blade to vehicle's left from the wiper arm.

NOTICE:

Do not fold the rear wiper arm with the rear wiper blade being removed from it.

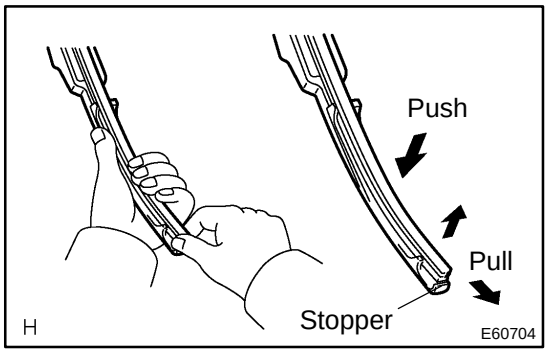

2. REMOVE REAR WIPER RUBBER

(a) Place the rear wiper with the rear end of the rubber protruded from the blade stopper as shown in the illustration.

NOTICE:

Do not pull out the wiper rubber forcibly.Otherwise the backing plates are deformed or brade claw is damaged.

HINT:

Pussing the position close to the middle of the blade will raise the rubber, which could be easier to pull it out.

3. INSTALL REAR WIPER RUBBER

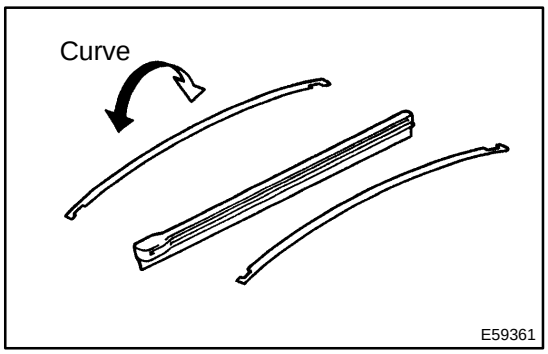

(a) Install the 2 wiper rubber backing plates to the rear wiper rubber.

NOTICE:

Be careful to observe and keep direction of curvature for correct replacement.

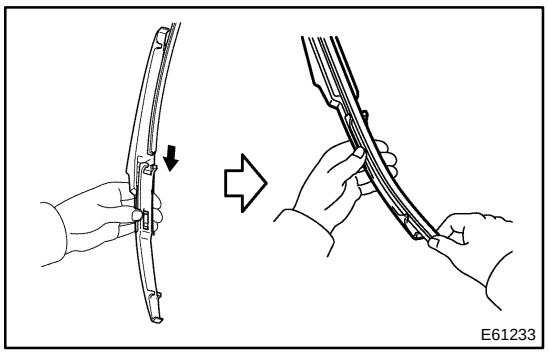

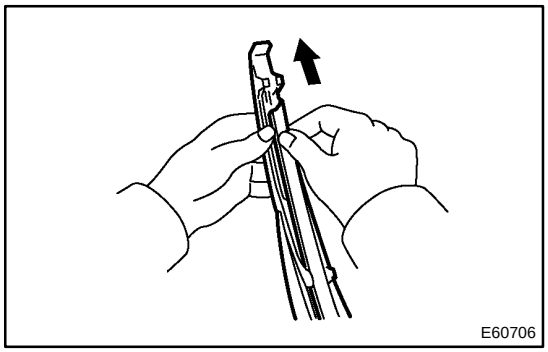

(b) Insert the rear wiper rubber from the claw of the middle of the rear wiper blade into the rear end posision.

(c) After passing the rear wiper rubber through the rear end side claw, protrude it from the rear end stopper and pass it through the front tip side claw.

WINDSHIELD WIPER SWITCH ASSY

6607A–01

REPLACEMENT

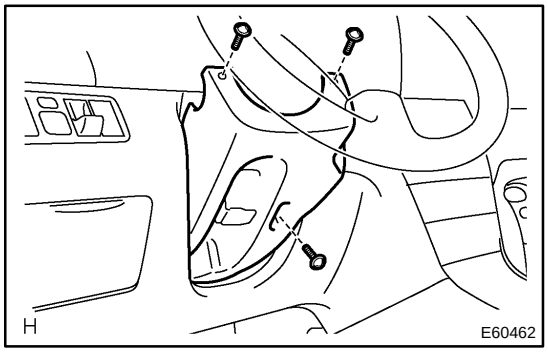

1. REMOVE STEERING COLUMN COVER LWR

(a) Remove 3 screws and steering column cover LWR.

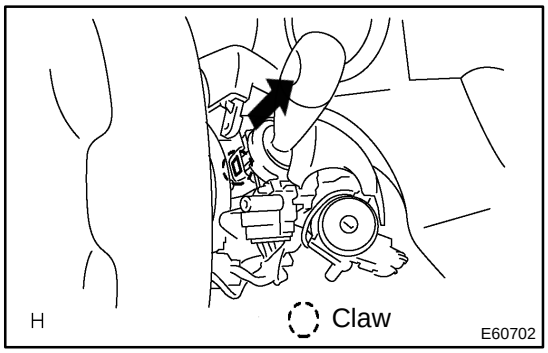

2. REMOVE WINDSHIELD WIPER SWITCH ASSY

(a) Disconnect the connecter of the windshield wiper switch.

(b) Release the claw and pull out the windshield wiper switch assy as shown in the illustration.

NOTICE:

Pressing the claw hard breaks the claw.

WINDSHIELD WIPER MOTOR ASSY

66076–01

REPLACEMENT

1. REMOVE WINDSHIELD WIPER ARM COVER

2. REMOVE FR WIPER ARM RH

(a) Operate the wiper and stop the windshield wiper motor assy at the automatic stop position.

(b) Remove a nut and FR wiper arm RH.

3. REMOVE FR WIPER ARM LH

(a) Remove a nut and FR wiper arm LH.

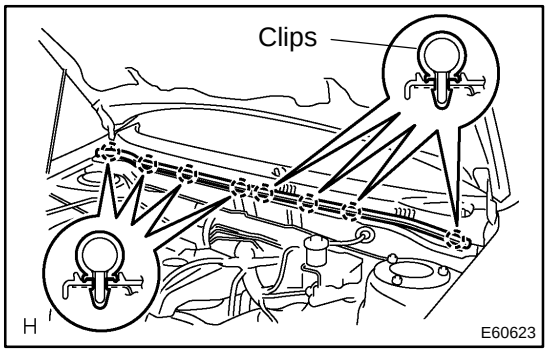

4. REMOVE HOOD TO COWL TOP SEAL

(a) Using a clipremover, disengage the meshing of 8 clips and remove the hood to cowl top seal.

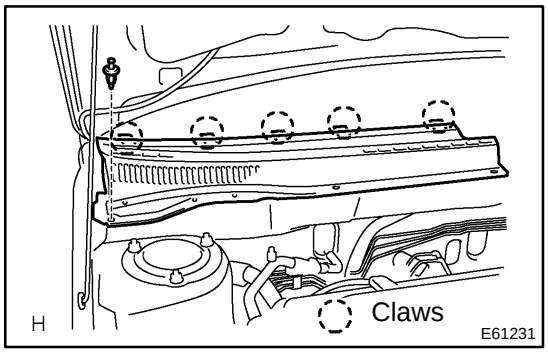

5. REMOVE COWL TOP VENTILATOR LOUVER RH

(a) Remove a clip and release the 5 claws, and remove the cowl top ventilator louver RH.

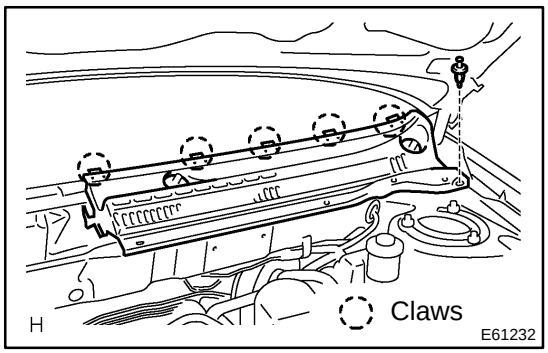

6. REMOVE COWL TOP VENTILATOR LOUVER LH

(a) Remove a clip and release the 5 claws, and remove the cowl top ventilator louver LH.

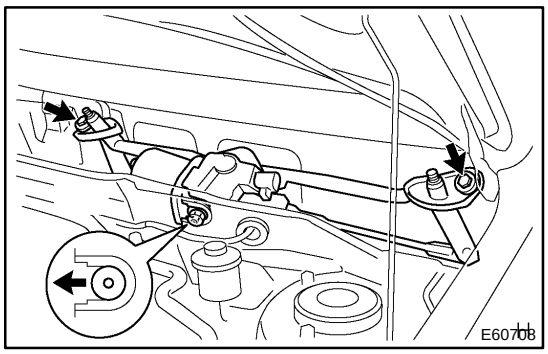

7. REMOVE WINDSHIELD WIPER LINK ASSY

(a) Disconnect the connector.

(b) Remove the 2 bolts.

(c) Slide the wiper link assy to vehicle's passengers side. Disengage the meshing of the rubber pin and remove the wiper link assy.

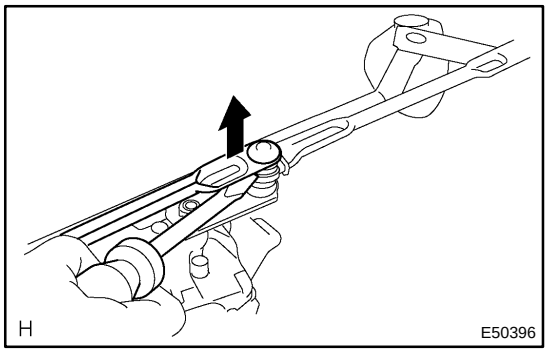

8. REMOVE WINDSHIELD WIPER MOTOR ASSY

(a) Using a screwdriver and disengage the meshing of 2 rods at the clank arm pivot of the windshield wiper motor assy.

HINT:

Tape the screwdriver tip before use.

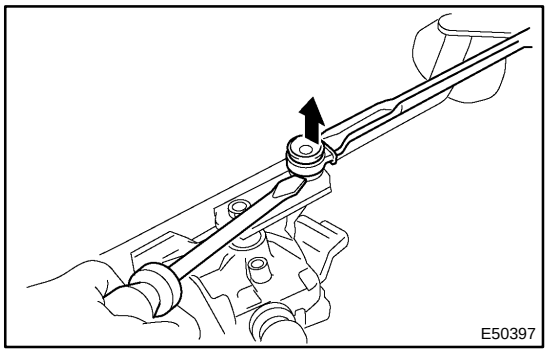

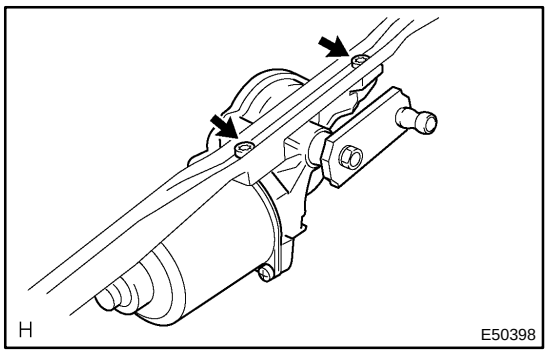

(b) Remove 2 torx bolts and windshield wiper motor assy.

9. INSTALL WINDSHIELD WIPER MOTOR ASSY

(a) Apply MP grease to the clank arm pivot of the windshield wiper motor assy.

(b) Using 2 torx bolts, install the windshield wiper motor assy to the windshield wiper link assy.
Torque: 7.5 N·m (76 kgf·cm, 66 in.·lbf)

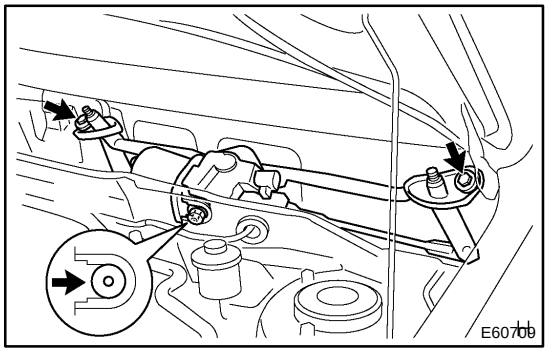

10. INSTALL WINDSHIELD WIPER LINK ASSY

(a) Install the meshing of the rubber pin.

(b) Install the windshield wiper link assy.with the 2 bolts.
Torque: 5.5 N·m (56 kgf·cm, 49 in.·lbf)

(c) Connect the connecter.

11. INSTALL FR WIPER ARM LH

(a) Operate the wiper, and stop the windshield wiper motor assy at the automatic stop position.

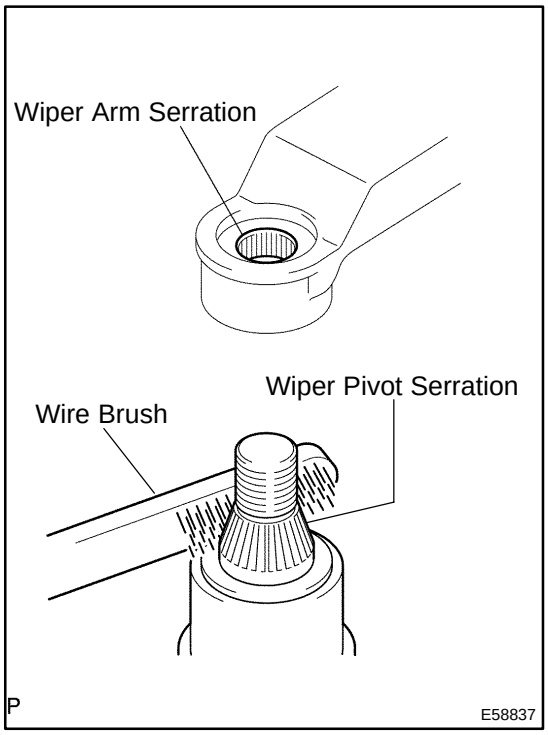

(b) Scrape off the serration part of the wiper arm with a round file or equivalent.

(c) Clean the wiper pivot serration with the wire brush.

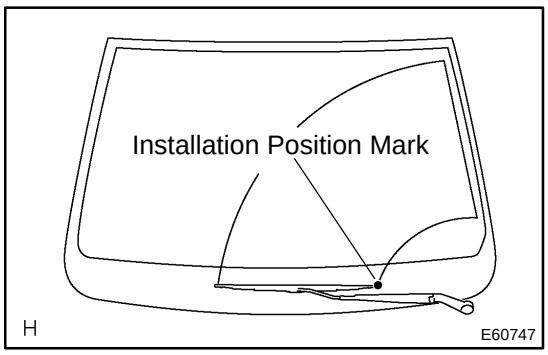

(d) Install the front wiper arm LH with a nut to the position shown in the illustration.
Torque: 20.5 N·m (209 kgf·cm, 15 ft·lbf)

HINT:
Hold down the arm hinge with hand to fasten a nut.

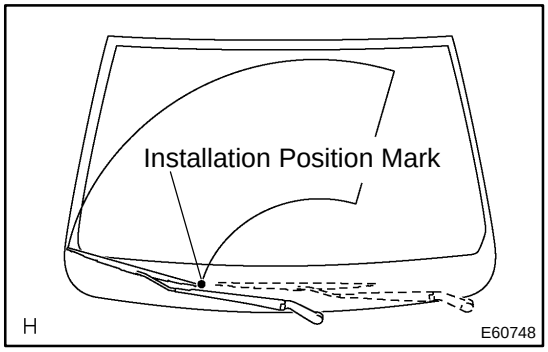

12. INSTALL FR WIPER ARM RH

(a) Scrape off the serration part of the wiper arm with a round file or equivalent.

(b) Clean the wiper pivot serration with the wire brush.

(c) Install the front wiper arm RH with a nut at the position shown in the illustration.

Torque: 20.5 N·m (209 kgf·cm, 15 ft·lbf)

HINT:

Hold down the arm hinge with hand to fasten a nut.

(d) Operate the wiper while running the water or the washer fluid over the window, and check the wiping condition and that the rear wiper does not hit against the vehicle body.

WIPER RUBBER LH

66077–01

REPLACEMENT

1. REMOVE FR WIPER BLADE LH

(a) Remove the front wiper blade LH from the front wiper arm LH.

NOTICE:

Do not fold down the front wiper arm with the front wiper blade being removed from it.

2. REMOVE WIPER RUBBER LH

(a) Remove the front wiper rubber LH from the front wiper blade.

(b) Remove the 2 wiper rubber backing plates from the wiper rubber LH.

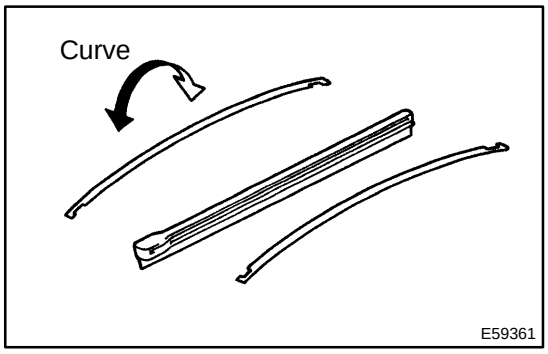

3. INSTALL WIPER RUBBER LH

(a) Install the 2 wiper rubber backing plates to the wiper rubber LH.

NOTICE:

Be careful to observe and keep direction of curvature for correct replacement.

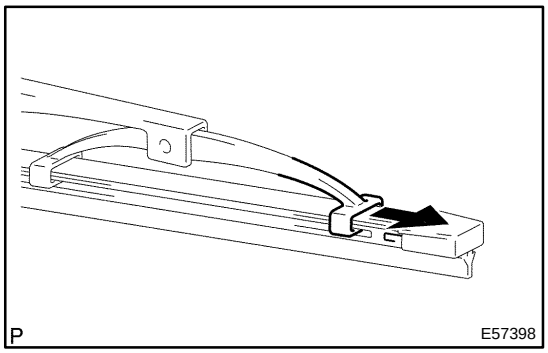

(b) Install the wiper rubber LH so that the head part (Larger side) of the wiper rubber faces the arm axie side.

NOTICE:

Push the front wiper blade into the grooves of the wiper rubber to engage them completely.

6607E–02

INSPECTION

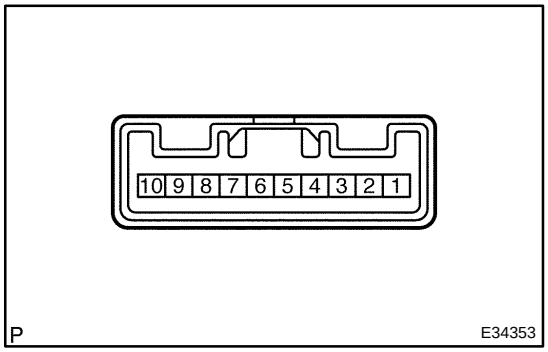

1. WINDSHIELD WIPER SWITCH ASSY

(a) Continuity Check

(1) Check the continuity of each terminal of the connector.

Standard:

Front Wiper Switch

Switch position	Tester connection	Specified condition
MIST	7 (+1) – 8 (+B)	Continuity
OFF	6 (+S) – 7 (+1)	Continuity
INT	6 (+S) – 7 (+1)	Continuity
LO	7 (+1) – 8 (+B)	Continuity
HI	8 (+B) – 9 (+2)	Continuity

Front Washer Switch

Switch position	Tester connection	Specified condition
OFF	4 (W) – 5 (EW)	No continuity
ON	4 (W) – 5 (EW)	Continuity

(b) w/o Intermittent time adjust:

Intermittent Operation Check

(1) Connect the voltmeter (+) terminal to terminal 7 (+1) of the connector, the voltmeter (–) terminal to terminal 5 (EW) of the connector.

(2) Connect the battery (+) to terminal 8 (+B) of the connector, the battery (–) to terminal 5 (EW) and 6 (+S) of the connector.

(3) Turn the wiper switch to the INT position.

(4) Connect the battery (+) to terminal 6 (+S) of the connector for 5 seconds.

(5) Connect the battery (–) to terminal 6 (+S) of the connector. Operate the intermittent wiper relay and check voltage between terminal 7 (+1) and terminal 5 (EW).

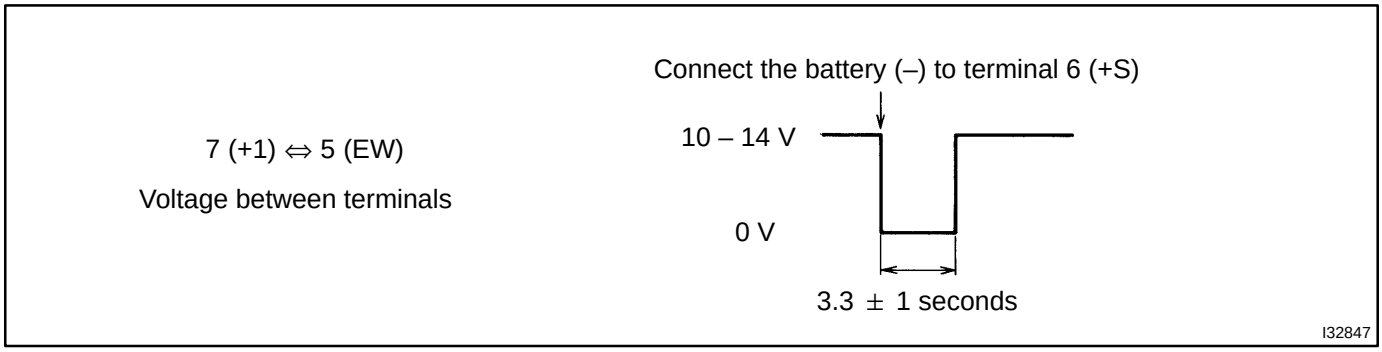

(c) w/ Intermittent time adjust:
Intermittent Operation Check
(1) Connect the voltmeter (+) terminal to terminal 7 (+1) of the connector, the voltmeter (–) terminal to terminal 5 (EW) of the connector.
(2) Connect the battery (+) to terminal 8 (+B) of the connector, the battery (–) to terminal 5 (EW) and 6 (+S) of the connector.
(3) Turn the wiper switch to the INT position.
(4) Connect the battery (+) to terminal 6 (+S) of the connector for 5 seconds.
(5) Connect the battery (–) to terminal 6 (+S) of the connector. Operate the intermittent wiper relay and check voltage between terminal 7 (+1) and terminal 5 (EW).

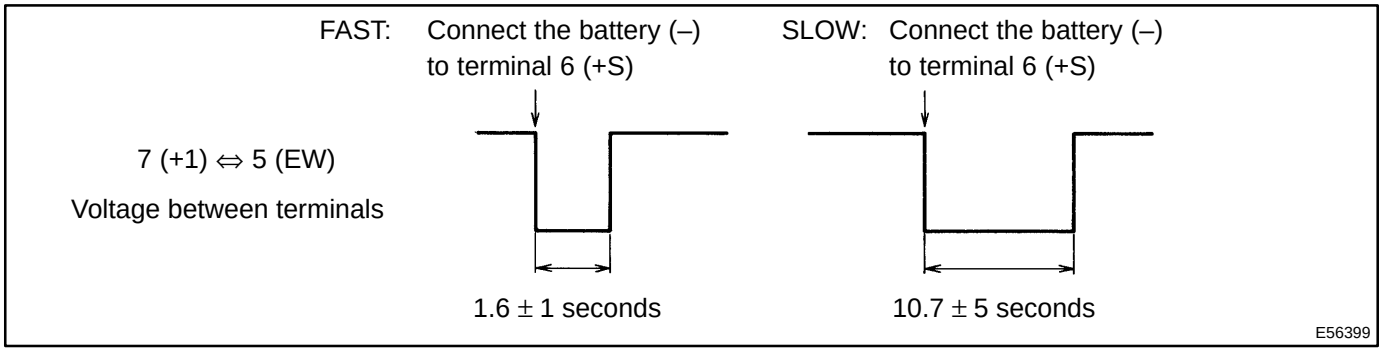

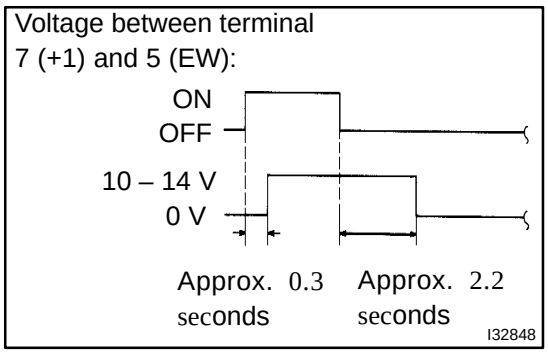

(d) Operation Check (Front Wiper)
(1) Turn the wiper switch to the OFF position.
(2) Connect the battery (+) to terminal 8 (+B) of the connector, the battery (–) to terminal 6 (+S) and 5 (EW) of the connecter.
(3) Connect the voltmeter (+) terminal to terminal 7 (+1) of the connector, the voltmeter (–) terminal to terminal 5 (EW) of the connector. Turn the washer switch to ON and OFF and check voltage between terminal 7 (+1) and terminal 5 (EW).

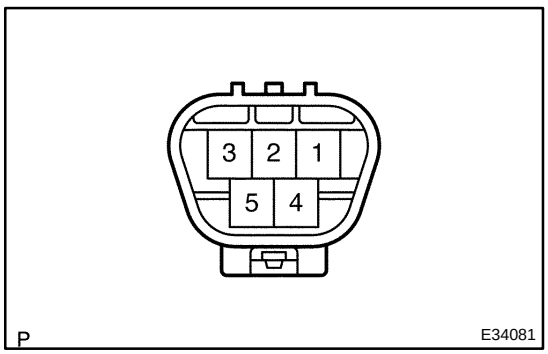

2. WINDSHIELD WIPER MOTOR ASSY

(a) LO Operation Check
(1) Connect the battery (+) to terminal 1 (+1) of the connector, the battery (–) to terminal 5 (E) of the connector, and check that the motor operates at low speed (LO).

(b) HI Operation Check
(1) Connect the battery (+) to terminal 4 (+2) of the connector, the battery (–) to terminal 5 (E) of the connector, and check that the motor operates at high speed (HI).

(c) Automatic Stop Operation Check

(1) Connect the battery (+) to terminal 1 (+1) of the connector, the battery (–) to terminal 5 (E) of the connector. With the motor being rotated at low speed (LO), disconnect terminal 1 (+1) to stop the wiper motor operation at any position except the automatic stop position.

(2) Using SST, connect terminal 1 (+1) and 3 (S), and the battery (+) to terminal 2 (B) to restart the motor operation at low speed (LO).

SST 09843–18040

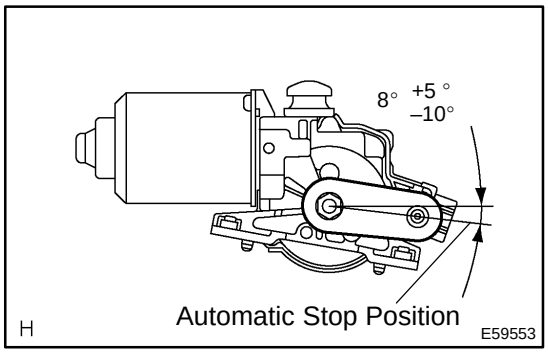

(3) Check the automatic stop position.

Standard: See the illustration.

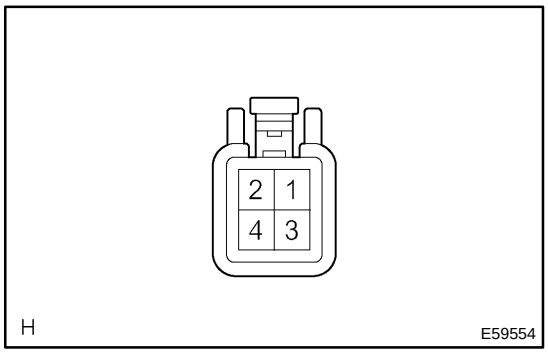

3. REAR WIPER MOTOR ASSY

(a) Operation Check

(1) Connect the battery (+) to terminal 4 (+1) of the connector, the battery (–) to terminal 1 (–) of the connector, and check that the rear wiper motor operates.

(b) Automatic Stop Position Operation Check

(1) Connect the battery (+) to terminal 2 (+B) of the connector, the battery (–) to terminal 3 (S) of the connector. With the motor being rotated, disconnect terminal 4 (+1) to stop the motor operation at any position except the automatic stop position.

(2) Connect the battery (+) to terminal 2 (+B) to restart the motor operation, then check that the wiper arm blade stops automatically at a certain position.

(See page 66–11)

6607D–02

ON–VEHICLE INSPECTION

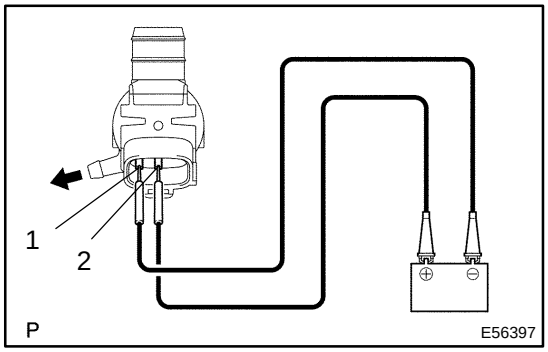

1. WASHER MOTOR

(a) Operation Check

(1) Pour the water into the washer jar with the windshield washer motor and pump assy installed to the washer jar assy.

(2) Connect the battery (+) to terminal 2 of the windshied washer motor and pump assy, the battery (–) to terminal 1 of the windshield washer motor and pump assy. Check that the water comes out from the washer jar.

WIPER AND WASHER SYSTEM

6607C–02

PROBLEM SYMPTOMS TABLE

1. WIPER AND WASHER SYSTEM

Symptom	Suspect Area	See page
Front wipers do not operate.	1. IG1 relay 2. WIPER fuse 3. Front wiper switch 4. Wire harness	– – 66–3 –
Front wipers do not operate in LO or HI.	1. Front wiper switch 2. Front wiper motor 3. Wire harness	66–3 66–3 –
Front wipers do not operate in INT.	1. Front wiper switch 2. Front wiper motor 3. Wire harness	66–3 66–3 –
Front washer motor does not operate.	1. WIPER fuse 2. Front washer switch 3. Front washer motor 4. Wire harness	– 66–3 66–2 –
Front wipers do not operate when washer switch is in the ON position.	1. Front wiper switch 2. Front wiper motor 3. Wire harness	66–3 66–3 –
Washer fluid is not injected.	1. Washer hose and nozzle	–
• When the wiper switch is OFF, the wiper blade does not retract or the retract position is wrong. • The wiper blade is in contact with the body.	1. Wiper motor (Wiper arm and blade set position)	66–11

WASHER NOZZLE

6607B–01

ADJUSTMENT

1. INSPECT WASHER NOZZLE

(a) With the engine running, check that the point where the washer fluid hits the windshield and the rear window is within the range indicated by the hatched line.

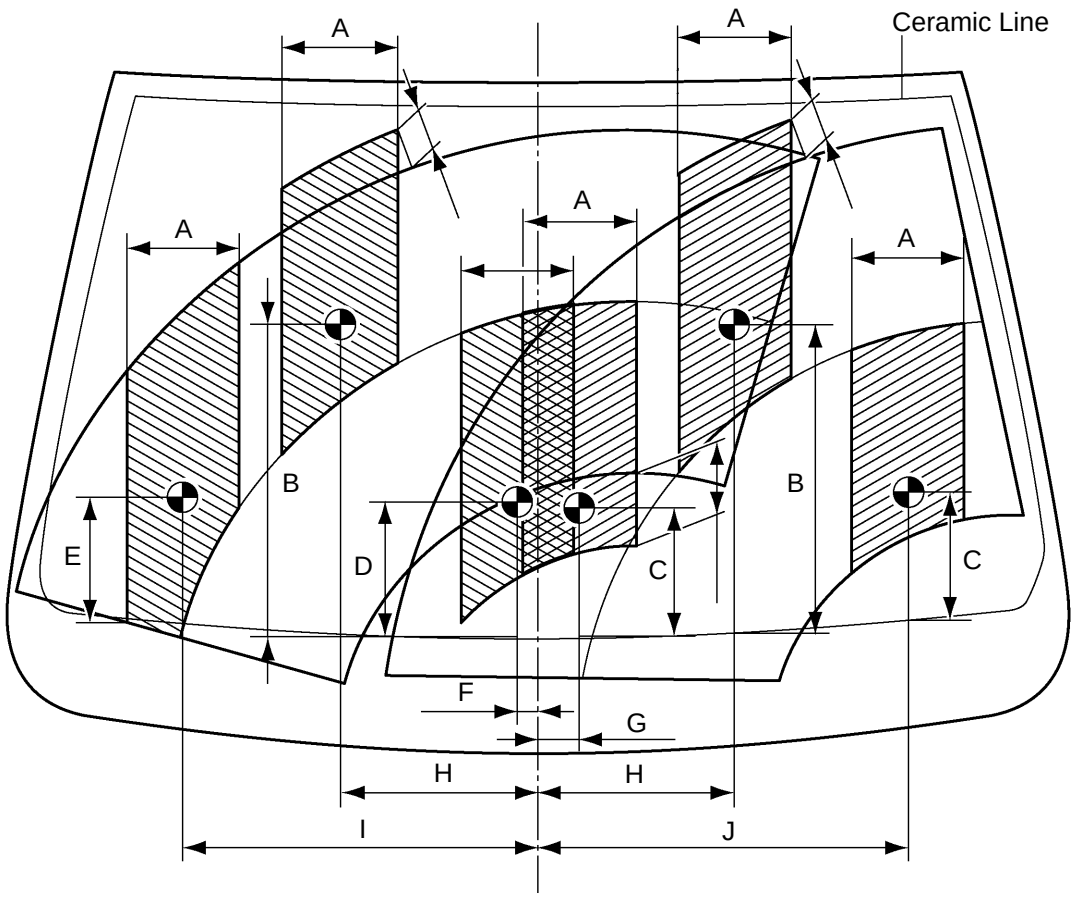

A:150mm(5.91in.)
B:410mm(16.14in.)
C:170mm(6.70in.)
D:175mm(6.89in.)
E:165mm(6.50in.)
F:25mm(0.98in.)
G:55mm(2.17in.)
H:260mm(10.23in.)
I:470mm(18.50in.)
J:490mm(19.29in.)

E60750

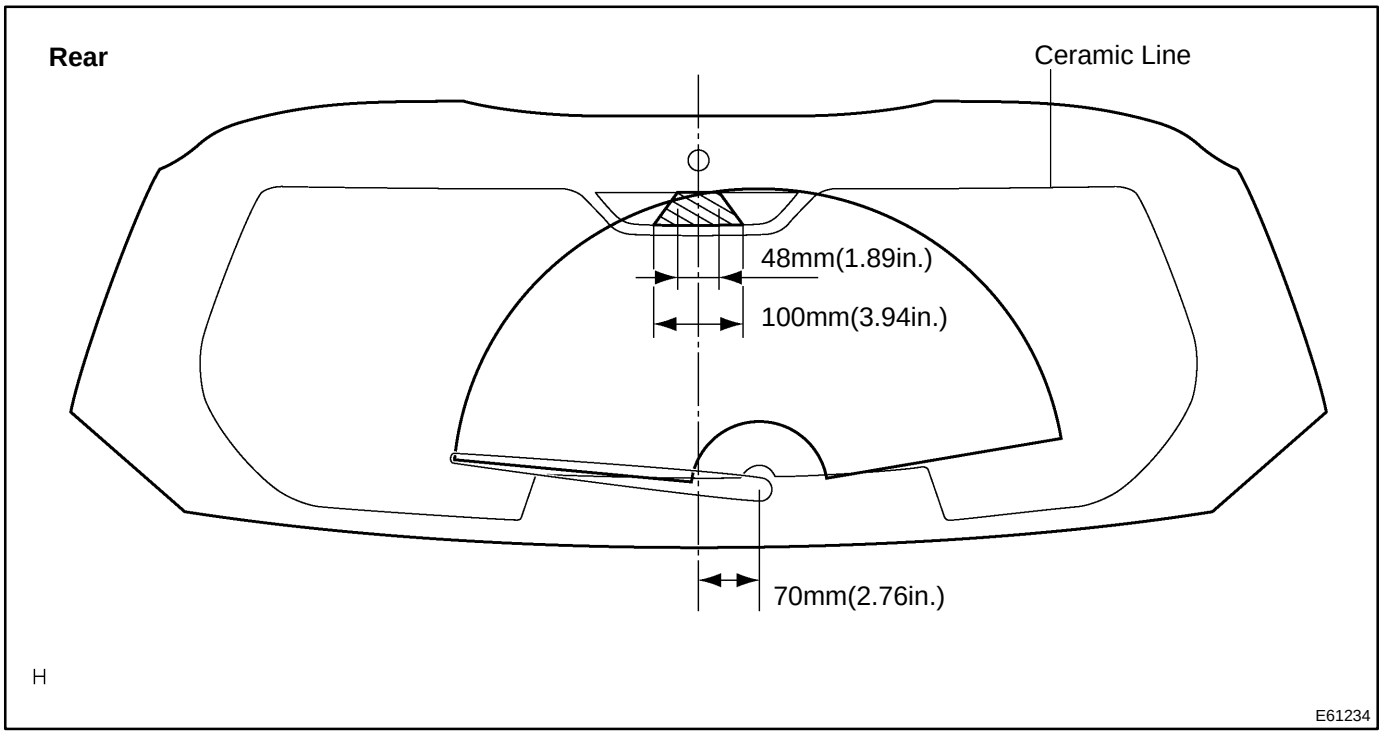
Rear
Ceramic Line
48mm(1.89in.)
100mm(3.94in.)
70mm(2.76in.)
H
E61234

670EB–01

COMPONENTS

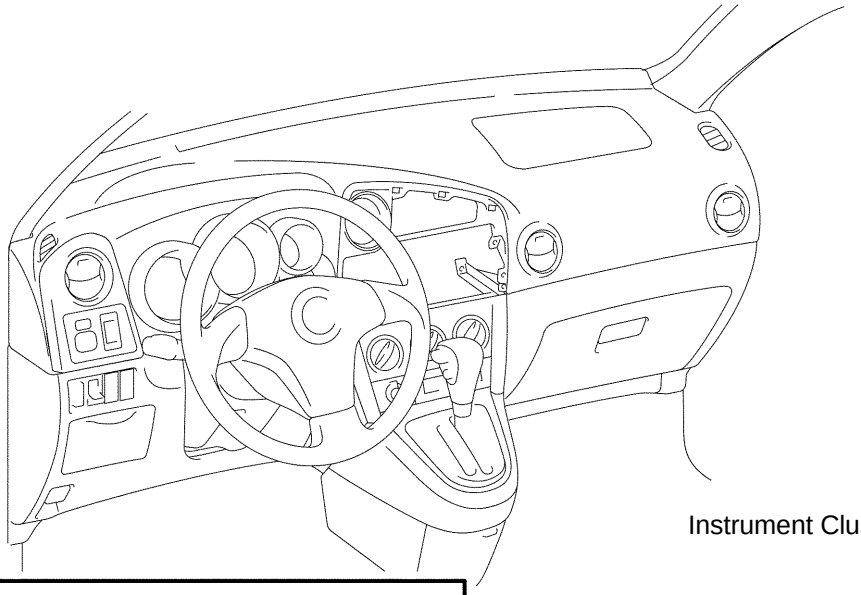

Instrument Cluster Finish Panel Sub–assy Center

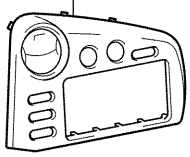

Navigation System:

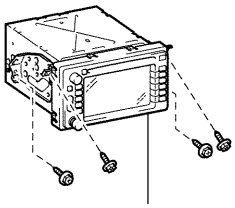

Navigation Receiver Assembly W/bracket

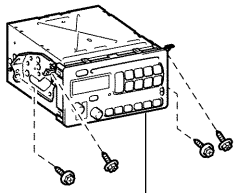

Radio Receiver Assembly W/bracket

Radio Bracket No.2

Radio Bracket No.1

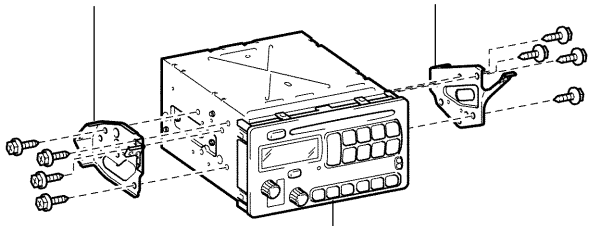

Radio Receiver Assy

Indash CD Changer:

Radio Bracket No.2

Radio Bracket No.1

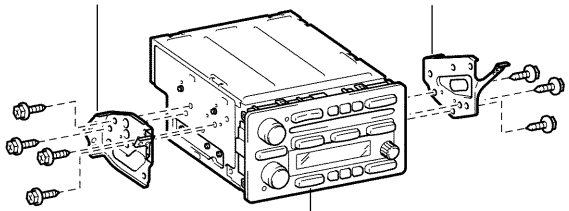

Radio Receiver Assy

Navigation System:

Radio Bracket No.2

Radio Bracket No.1

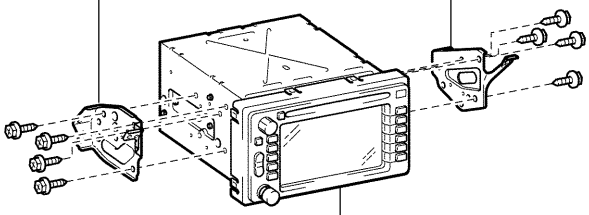

Navigation Receiver Assy

I32558

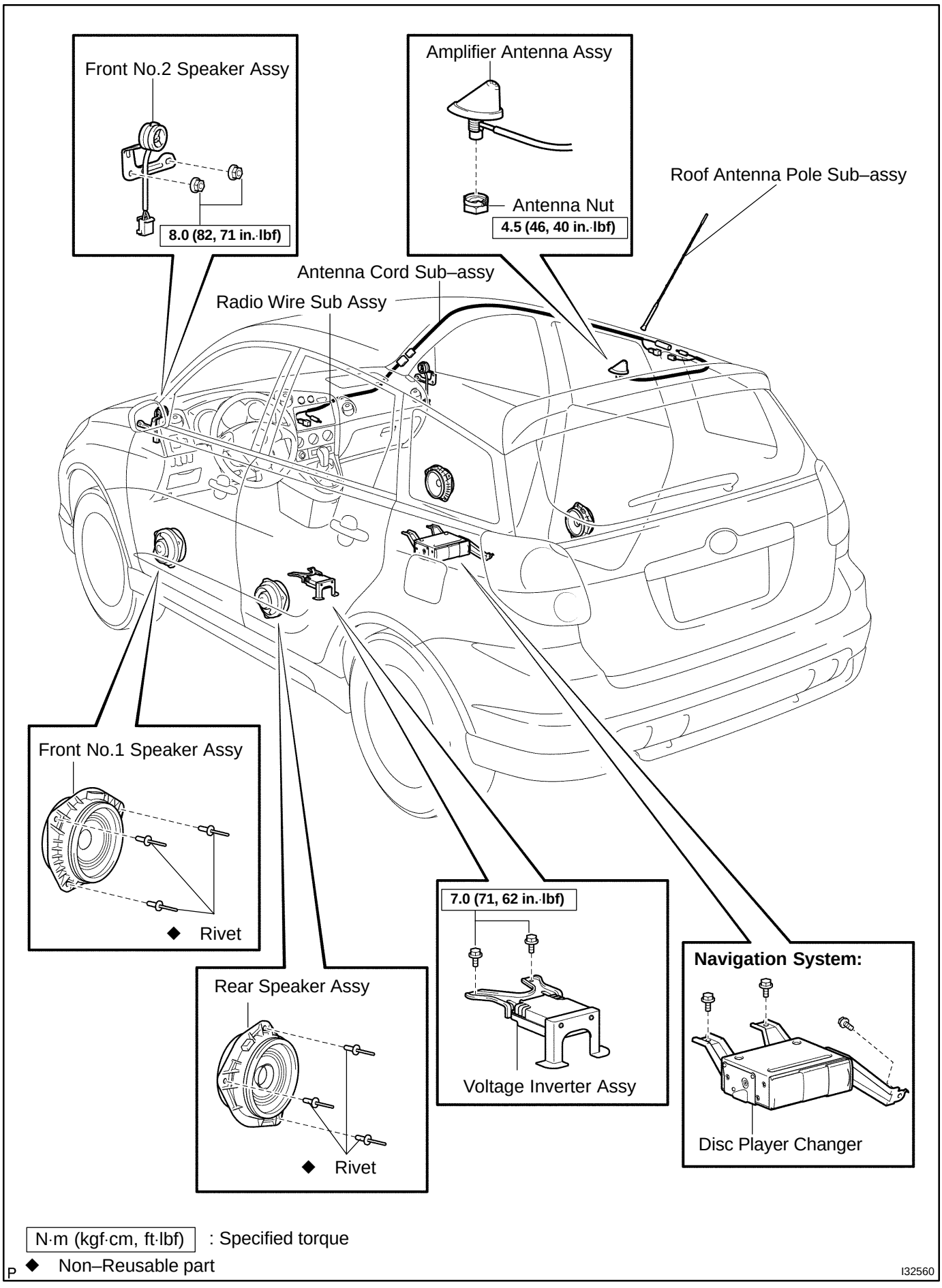
Front No.2 Speaker Assy
8.0 (82, 71 in.·lbf)
Amplifier Antenna Assy
Antenna Nut
4.5 (46, 40 in.·lbf)
Roof Antenna Pole Sub–assy
Antenna Cord Sub–assy
Radio Wire Sub Assy
Front No.1 Speaker Assy
◆ Rivet
Rear Speaker Assy
◆ Rivet
7.0 (71, 62 in.·lbf)
Voltage Inverter Assy
Navigation System:
Disc Player Changer
N·m (kgf·cm, ft·lbf) : Specified torque
◆ Non–Reusable part
I32560

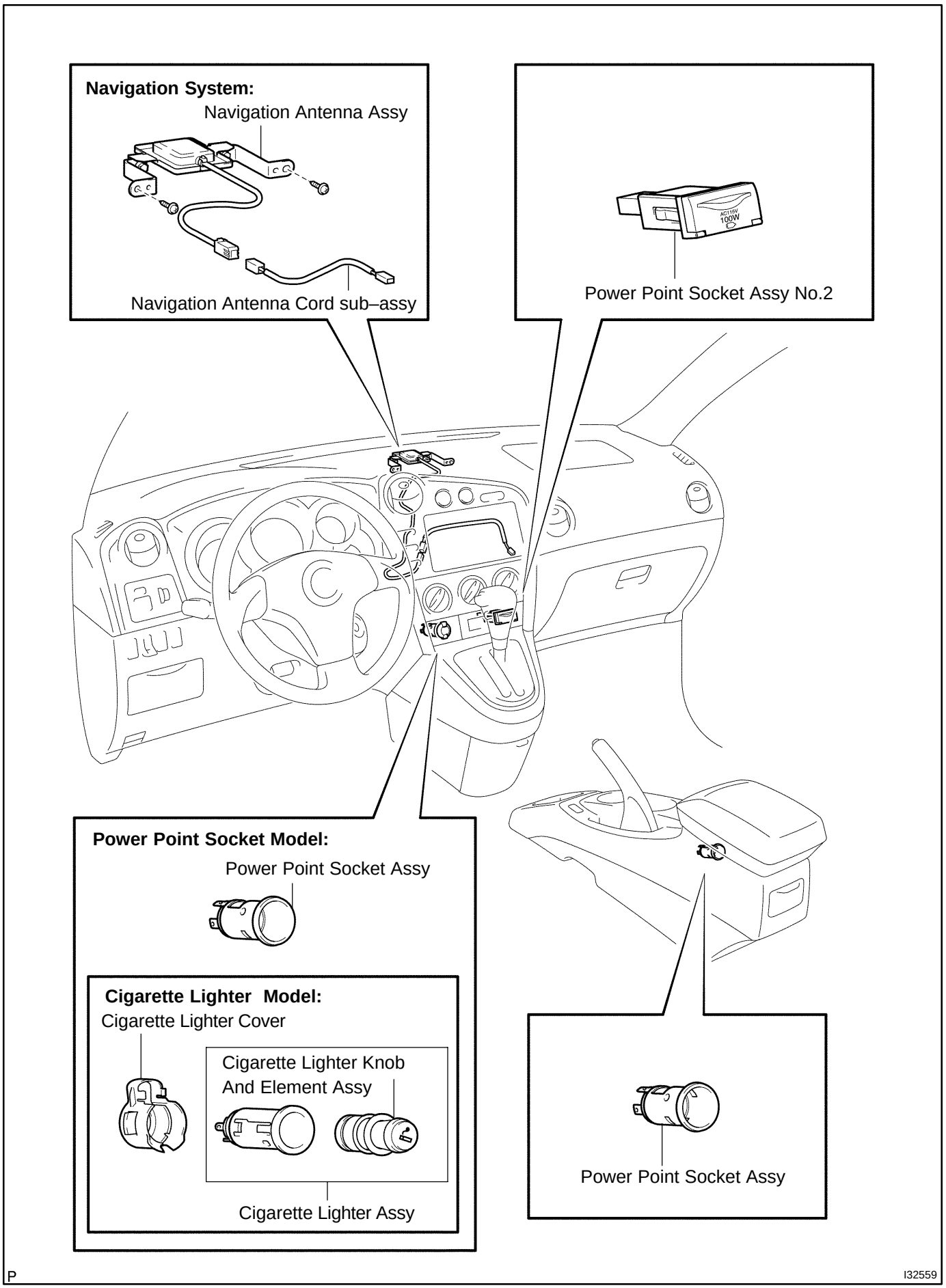
Navigation System:
Navigation Antenna Assy
Navigation Antenna Cord sub–assy
Power Point Socket Assy No.2
Power Point Socket Model:
Power Point Socket Assy
Cigarette Lighter Model:
Cigarette Lighter Cover
Cigarette Lighter Knob
And Element Assy
Cigarette Lighter Assy
Power Point Socket Assy
P
I32559

AUDIO & VISUAL SYSTEM

670EA–01

PRECAUTION

1. OBSERVE HANDLING AND OPERATIONAL PRECAUTIONS

(a) Please explain to the customer that when the negative terminal is disconnected from the battery, the channel information memory of the AM/FM broadcast stations in the radio receiver is cleaned. If necessary, make a note of the recorded channel information before the negative terminal is disconnected, then reset the information after the negative terminal is reconnected.

(b) The removal/installation of the radio receiver should be performed after all the cassette tapes and audio CDs are ejected from the radio receiver.

HINT:

If cassette tapes and audio CDs cannot be ejected due to the malfunction of the radio receiver, do not try to drag then out by force. Bring the vehicle to the repair plant.

(c) Fasten the earth bolt securely when the antenna cord is removed or installed.

HINT:

Failing to fasten the earth bolt securely causes noise at the time of radio wave reception.

(d) Do not touch the cone paper of the speaker.

RADIO RECEIVER ASSY

670EC–01

REPLACEMENT

HINT:

COMPONENTS: See page 67–2

1. REMOVE INSTRUMENT CLUSTER FINISH PANEL SUB–ASSY CENTER (See page 71–10)

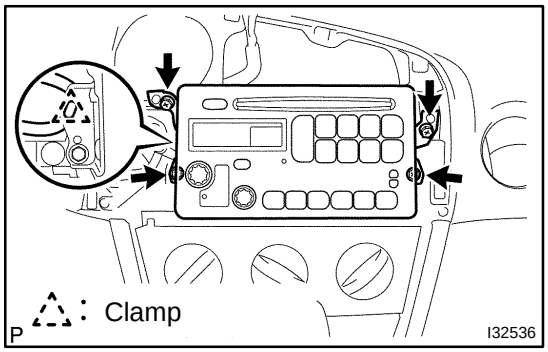

2. REMOVE RADIO RECEIVER ASSEMBLY W/BRACKET

(a) Remove the 4 screws.

(b) Disconnect the clamp from the radio bracket No.2.

(c) Disconnect the connectors, then remove the radio receiver assembly w/bracket.

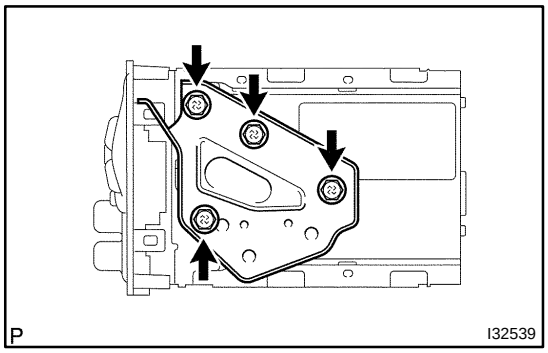

3. REMOVE RADIO BRACKET NO.1

(a) Except Indash CD Changer:
Remove the 4 screws and radio bracket No.1.

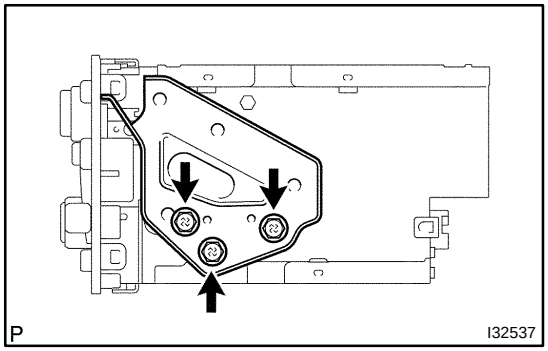

(b) Indash CD Changer:
Remove the 3 screws and radio bracket No.1.

Except Indash CD Changer:

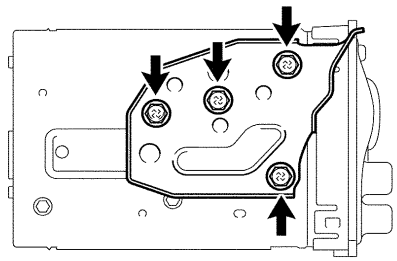

P

Indash CD Changer:

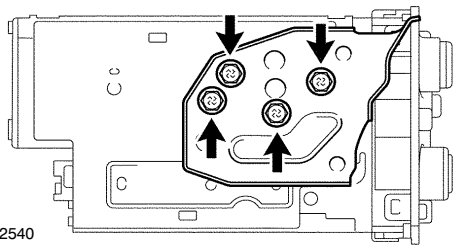

I32540
I32538
P

I32569

4. REMOVE RADIO BRACKET NO.2

(a) Remove the 4 screws and radio bracket No.2.

5. REMOVE RADIO RECEIVER ASSY

NAVIGATION RECEIVER ASSY

670ED–01

REPLACEMENT

HINT:

COMPONENTS: See page 67–2

1. REMOVE INSTRUMENT CLUSTER FINISH PANEL SUB–ASSY CENTER (See page 71–10)

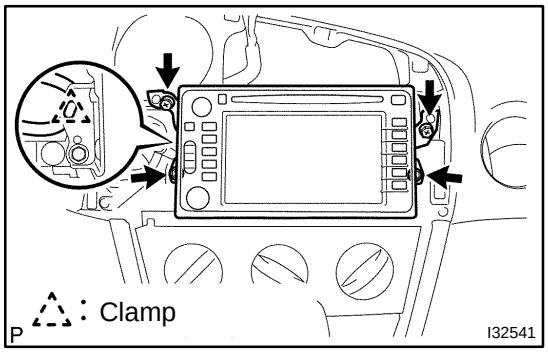

2. REMOVE NAVIGATION RECEIVER ASSEMBLY W/BRACKET

(a) Remove the 4 screws.

(b) Disconnect the clamp from the radio bracket No.2.

(c) Disconnect the connectors, then remove the navigation receiver assembly w/bracket.

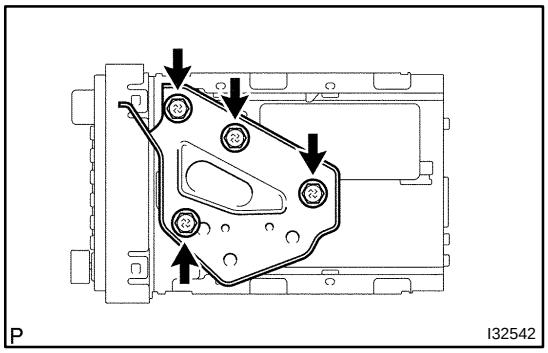

3. REMOVE RADIO BRACKET NO.1

(a) Remove the 4 screws and radio bracket No.1.

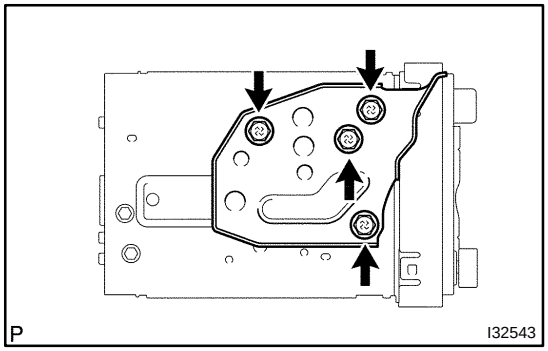

4. REMOVE RADIO BRACKET NO.2

(a) Remove the 4 screws and radio bracket No.2.

5. REMOVE NAVIGATION RECEIVER ASSY

FRONT NO.1 SPEAKER ASSY

670EF–01

REPLACEMENT

HINT:

COMPONENTS: See page 67–2

1. **REMOVE FRONT DOOR PULL HANDLE LH (See page 75–5)**
2. **REMOVE POWER WINDOW REGULATOR MASTER SWITCH ASSY (W/ POWER WINDOW) (See page 75–5)**
3. **REMOVE FRONT ARMREST BASE PANEL UPPER LH (W/O POWER WINDOW) (See page 75–5)**
4. **REMOVE FRONT DOOR WINDOW REGULATOR HANDLE ASSY (W/O POWER WINDOW) (See page 75–5)**
5. **REMOVE FRONT DOOR TRIM BOARD SUB–ASSY LH (See page 75–5)**

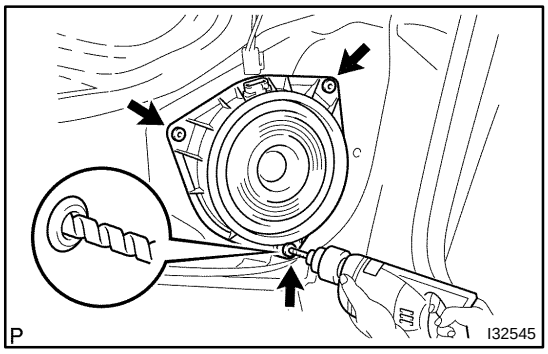

6. REMOVE FRONT NO.1 SPEAKER ASSY

(a) Disconnect the connector.

(b) Using a drill of less then ϕ 4 mm (0.16 in.), drill out the 3 rivet heads and remove the front No.1 speaker assy from the front door panel.

(c) Gently and vertically put the drill to the rivet, and cut the rivet flanges.

NOTICE:

- **Prizing the hole with a drill can lead to damage to the rivet hole or breaking the drill.**
- **Take cafe as the cut rivet is hot.**

(d) Even if flange is taken off, continue drilling and push out remaining fragments with the drill.

(e) Using a vacuum cleaner, remove the drilled rivet and their dust from the inside of the front door panel.

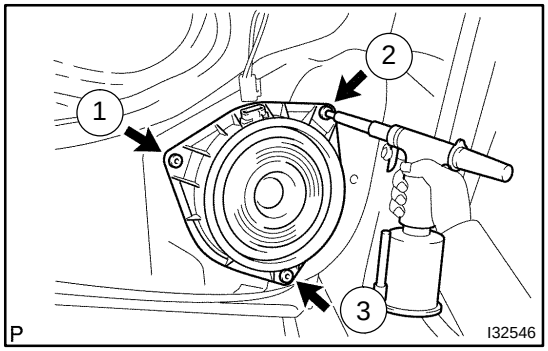

7. INSTALL FRONT NO.1 SPEAKER ASSY

(a) Using an air riveter or hand riveter, 3 new strike rivets to install the front No.1 speaker assy to the front door panel.

NOTICE:

Install the new strike rivet in following order shown in the illustration to install the front No.1 speaker assy.

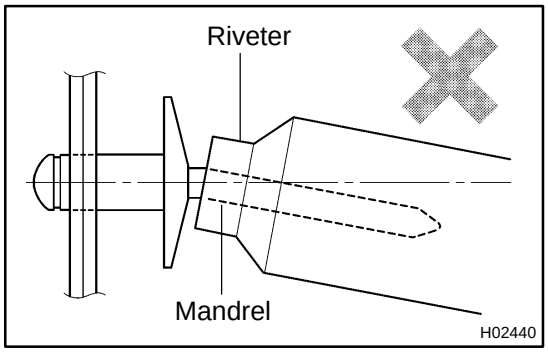

NOTICE:

- **Do not prize a riveter, as riveter is damaged, it is not tightened and the mandrel is bent.**

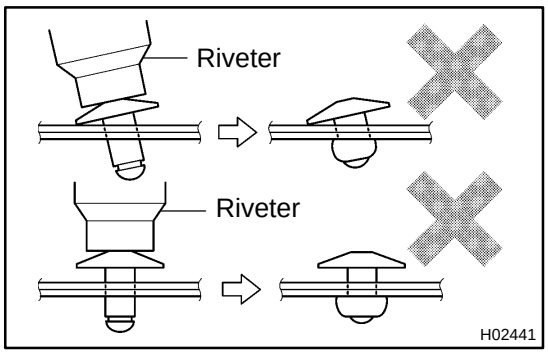

- **Do not tilt the riveter and disconnect the rivet from the material while handling a riveter, as the materials are not tightened firmly.**

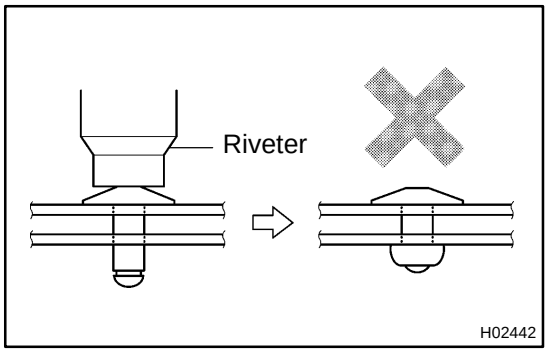

- **Install the rivet while attaching materials, as they are not tightened firmly.**

(b) Connect the connector.

FRONT NO.2 SPEAKER ASSY

670ER–01

REPLACEMENT

HINT:

COMPONENTS: See page 67–2

1. **REMOVE FRONT DOOR PULL HANDLE LH (See page 75–5)**
2. **REMOVE POWER WINDOW REGULATOR MASTER SWITCH ASSY (W/ POWER WINDOW) (See page 75–5)**
3. **REMOVE FRONT ARMREST BASE PANEL UPPER LH (W/O POWER WINDOW) (See page 75–5)**
4. **REMOVE FRONT DOOR WINDOW REGULATOR HANDLE ASSY (W/O POWER WINDOW) (See page 75–5)**
5. **REMOVE FRONT DOOR TRIM BOARD SUB–ASSY LH (See page 75–5)**

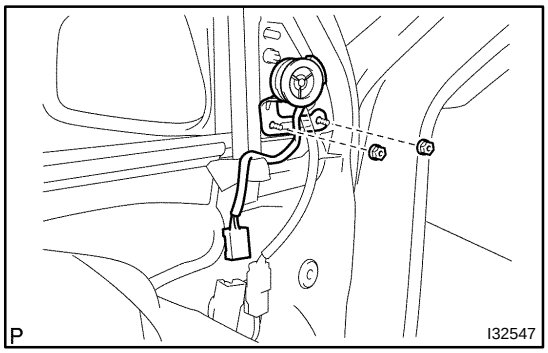

6. **REMOVE FRONT NO.2 SPEAKER ASSY**

(a) Disconnect the connector.

(b) Remove the 2 nuts and front No.2 speaker assy from the front door panel.

7. **INSTALL FRONT NO.2 SPEAKER ASSY**

(a) Install the front No.2 speaker assy with the 2 nuts.
Torque: 8.0 N·m (82 kgf·cm, 71 in.·lbf)

(b) Connect the connector.

REAR SPEAKER ASSY

670EG–01

REPLACEMENT

HINT:

COMPONENTS: See page 67–2

1. **REMOVE REAR DOOR PULL HANDLE (See page 75–18)**
2. **REMOVE REAR DOOR WINDOW REGULATOR HANDLE ASSY (W/O POWER WINDOW) (See page 75–18)**
3. **REMOVE REAR DOOR TRIM BOARD SUB–ASSY LH (See page 75–18)**

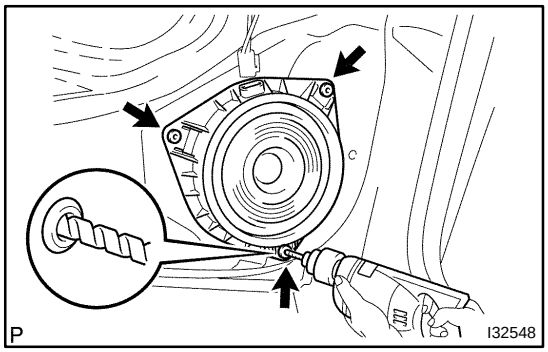

4. **REMOVE REAR SPEAKER ASSY**

(a) Disconnect the connector.

(b) Using a drill of less then ϕ 4 mm (0.16 in.), drill out the 3 rivet heads and remove the rear speaker assy from the rear door panel.

(c) Gently and vertically put the drill to the rivet, and cut the rivet flanges.

NOTICE:

- **Prizing the hole with a drill can lead to damage to the rivet hole or breaking the drill.**
- **Take cafe as the cut rivet is hot.**

(d) Even if flange is taken off, continue drilling and push out remaining fragments with the drill.

(e) Using a vacuum cleaner, remove the drilled rivet s and their dust from the inside of the rear door panel.

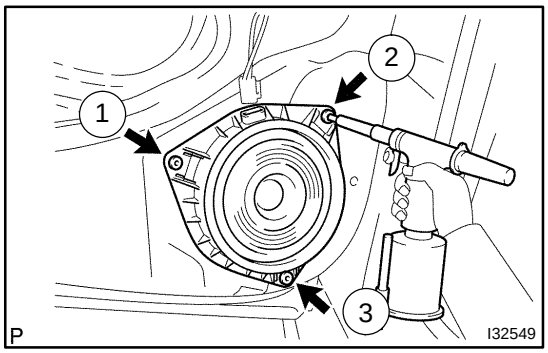

5. **INSTALL REAR SPEAKER ASSY**

(a) Using an air riveter or hand riveter, 3 new strike rivets install the rear speaker assy to the rear door panel.

NOTICE:

Install the new strike rivet in following order shown in the illustration to install the rear speaker assy.

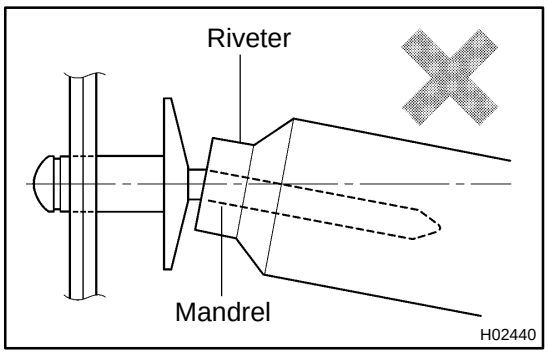

NOTICE:

- **Do not prize a riveter, as riveter is damaged, it is not tightened and the mandrel is bent.**

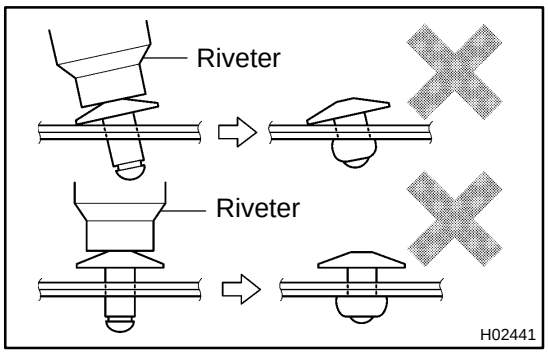

- **Do not tilt the riveter and disconnect the rivet from the material while handling a riveter, as the materials are not tightened firmly.**

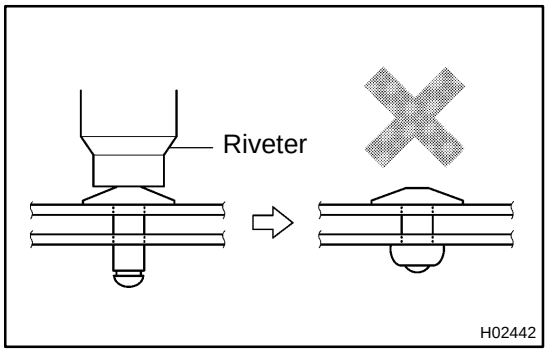

- **Install the rivet while attaching materials, as they are not tightened firmly.**

(b) Connect the connector.

NAVIGATION ANTENNA ASSY

670EM–01

REPLACEMENT

HINT:

COMPONENTS: See page 67–2

1. REMOVE INSTRUMENT PANEL SUB–ASSY UPPER (See page 71–10)

HINT:

Refer to the instructions for removal of the instrument panel sub–assy upper.

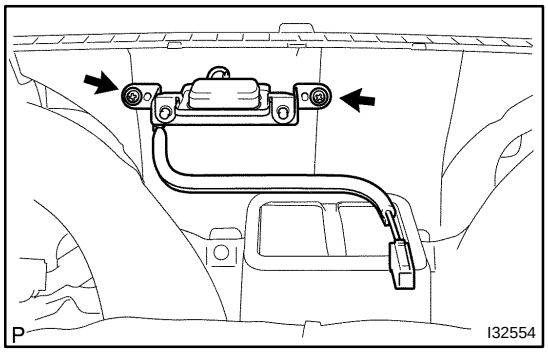

2. REMOVE NAVIGATION ANTENNA ASSY

(a) Disconnect the connector, remove the navigation antenna cord sub–assy.

(b) Remove the 2 screws and navigation antenna assy from the defroster nozzle assy.

3. INSTALL INSTRUMENT PANEL SUB–ASSY UPPER (See page 71–10)

ANTENNA CORD SUB–ASSY

670EI–01

REPLACEMENT

HINT:

COMPONENTS: See page 67–2

1. REMOVE ROOF HEADLINING ASSY (See page 76–17)

HINT:

Refer to the instructions for removal of the roof headlining assy.

2. REMOVE ANTENNA CORD SUB–ASSY

(a) Remove the antenna cord sub–assy from the roof headlining assy.

3. INSTALL ANTENNA CORD SUB–ASSY

(a) Tape the antenna cord sub–assy at the position of the roof headlining assy shown in the illustration.

NOTICE:

- **The antenna cord sub–assy should come to the center of the tape (100 mm (3.94 in.) x 25 mm (0.98 in.)) when taped.**
- **Try not to touch the adhesive side of the tape when taping.**

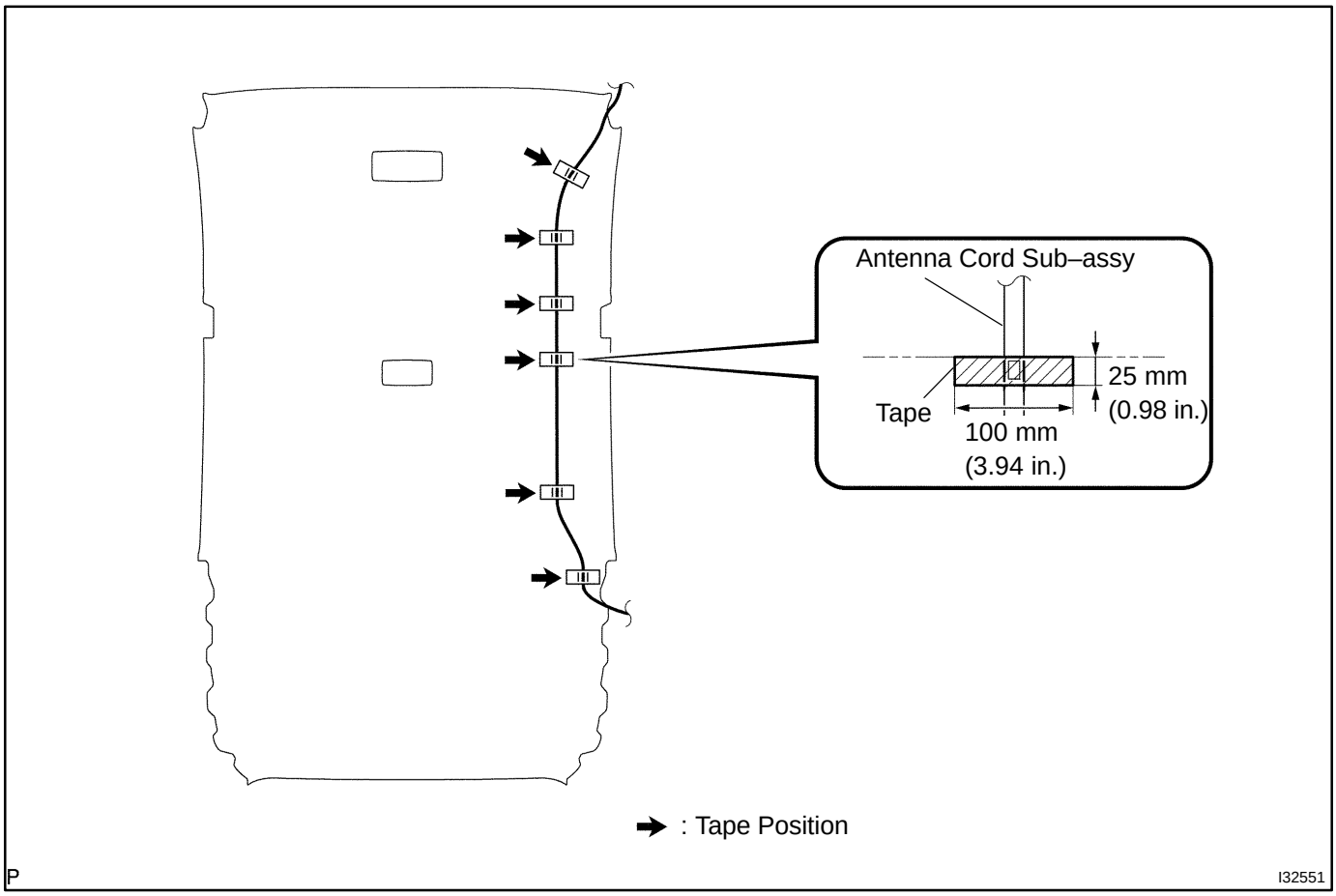

4. INSTALL ROOF HEADLINING ASSY (See page 76–17)

5. INSTALL REAR SEAT CUSHION ASSY AND REAR SEAT BACK ASSY (See page 72–10)

RADIO WIRE SUB ASSY

670EH–01

REPLACEMENT

HINT:

COMPONENTS: See page 67–2

1. REMOVE INSTRUMENT PANEL SUB–ASSY UPPER (See page 71–10)

HINT:

Refer to the instructions for removal of the instrument panel sub–assy upper.

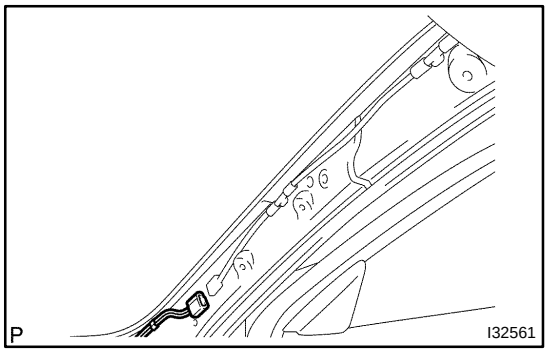

2. REMOVE RADIO WIRE SUB ASSY

(a) Disconnect the connector.

(b) Remove the 3 clamps and radio wire sub assy.

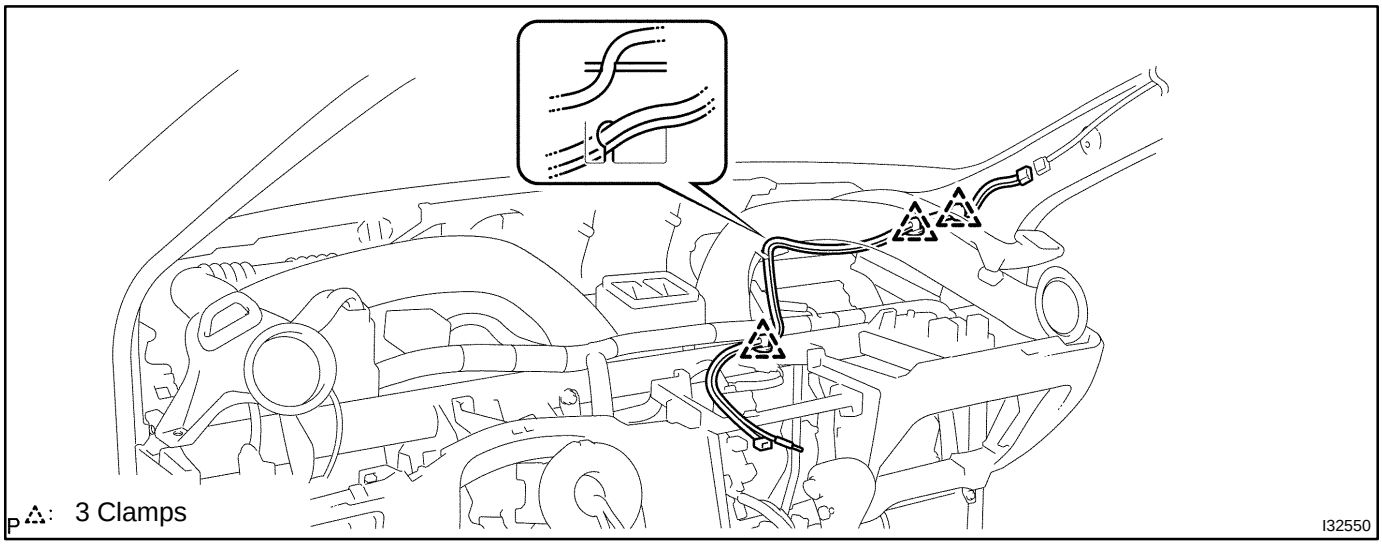

3. INSTALL INSTRUMENT PANEL SUB–ASSY UPPER (See page 71–10)

AMPLIFIER ANTENNA ASSY

670EJ–01

REPLACEMENT

HINT:

COMPONENTS: See page 67–2

1. REMOVE ROOF ANTENNA POLE SUB–ASSY (See page 67–18)

2. REMOVE ROOF HEADLINING ASSY (See page 76–17)

HINT:

Refer to the instructions for removal of the roof headlining assy.

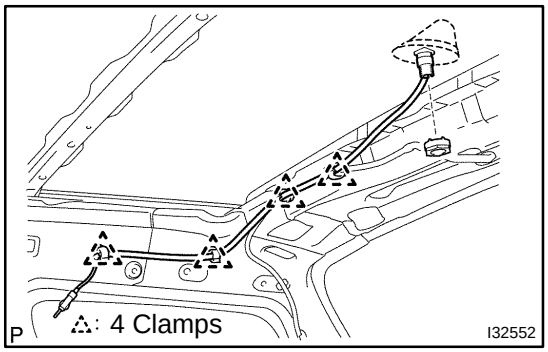

3. REMOVE AMPLIFIER ANTENNA ASSY

(a) Remove the 4 clamps and antenna nut.

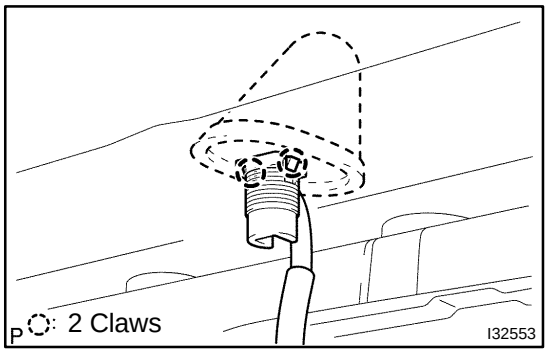

(b) Release the 2 fitting claws, remove the amplifier antenna assy.

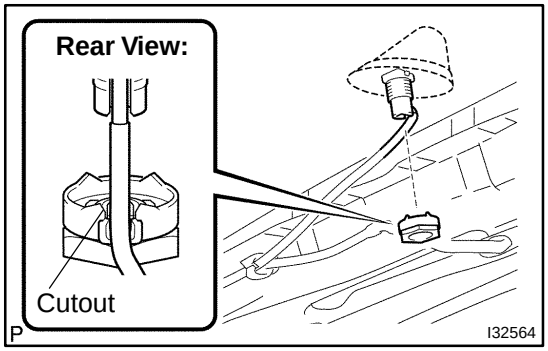

4. INSTALL AMPLIFIER ANTENNA ASSY

(a) Set the amplifier antenna assy to the hole on the roof, and place the antenna cord on the cutout on the antenna nut.

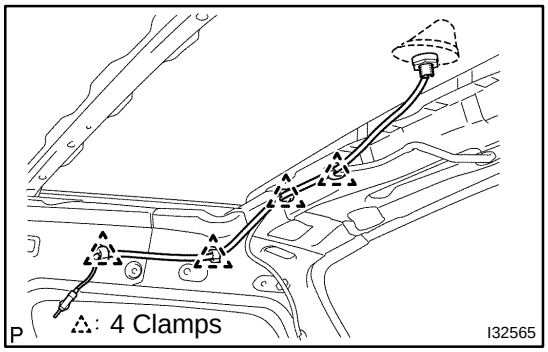

(b) Install the amplifier antenna assy with the antenna nut.
Torque: 4.5 N·m (46 kgf·cm, 40 in.·lbf)

(c) Install the 4 clamps.

5. INSTALL ROOF HEADLINING ASSY (See page 76–17)

6. INSTALL REAR SEAT CUSHION ASSY AND REAR SEAT BACK ASSY (See page 72–10)

POWER POINT SOCKET ASSY

670EO–01

REPLACEMENT

HINT:

COMPONENTS: See page 67–2

1. **REMOVE FLOOR SHIFT SHIFT LEVER KNOB SUB–ASSY (M/T TRANSAXLE) (See page 71–10)**
2. **REMOVE INSTRUMENT CLUSTER FINISH PANEL ASSY CTR (See page 71–10)**
3. **REMOVE CONSOLE BOX ASSY REAR (See page 33–4)**

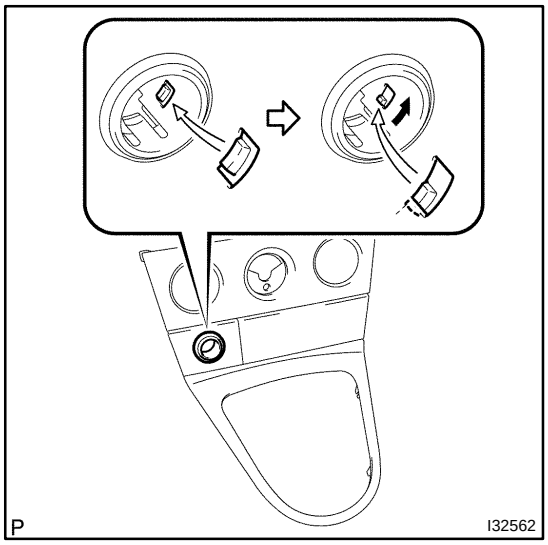

4. **REMOVE POWER POINT SOCKET ASSY**

(a) Turn the socket in the circumference direction as shown in the illustration, disengage the claw between the socket and the power point socket cover, and push out the socket to the room side.

(b) Align the socket with the notch on the power point socket cover, remove the power point socket assy to the room side.

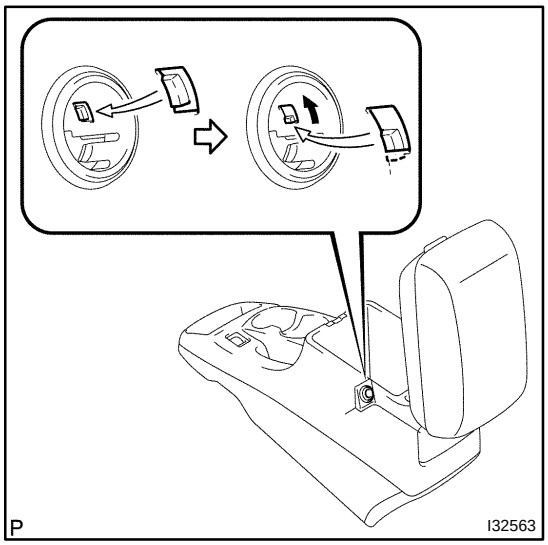

5. **INSTALL POWER POINT SOCKET ASSY**

(a) Align the socket with the notch on the power point socket cover, push the power point socket assy into as hard as possible and install it.

6. **INSTALL CONSOLE BOX ASSY REAR (See page 33–4)**

CIGARETTE LIGHTER ASSY

670EN–01

REPLACEMENT

HINT:

COMPONENTS: See page 67–2

1. REMOVE FLOOR SHIFT SHIFT LEVER KNOB SUB–ASSY (M/T TRANSAXLE) (See page 71–10)

2. REMOVE INSTRUMENT CLUSTER FINISH PANEL ASSY CTR (See page 71–10)

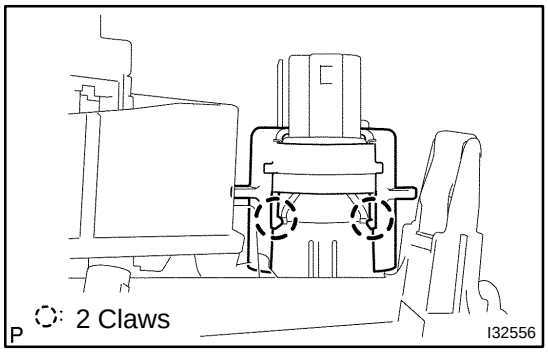

3. REMOVE CIGARETTE LIGHTER COVER

(a) Release the 2 fitting claws, remove the cigarette lighter cover.

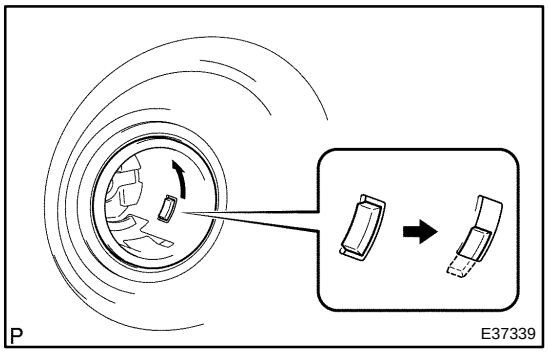

4. REMOVE CIGARETTE LIGHTER ASSY

(a) Remove the cigarette lighter knob and element assy.

(b) Turn the socket in the circumference direction as shown in the illustration, disengage the claw between the socket and the cigarette lighter bezel stay, and push out the socket to the room side.

(c) Align the socket with the notch on the cigarette lighter bezel stay, remove the cigarette lighter assy to the room side.

5. INSTALL CIGARETTE LIGHTER ASSY

(a) Align the socket with the notch on the cigarette lighter bezel stay, push the cigarette lighter assy into as hard as possible and install it.

(b) Install the cigarette lighter knob and element assy.

POWER POINT SOCKET ASSY NO.2

670EP–01

REPLACEMENT

HINT:

COMPONENTS: See page 67–2

1. **REMOVE FLOOR SHIFT SHIFT LEVER KNOB SUB–ASSY (M/T TRANSAXLE) (See page 71–10)**
2. **REMOVE INSTRUMENT CLUSTER FINISH PANEL ASSY CTR (See page 71–10)**

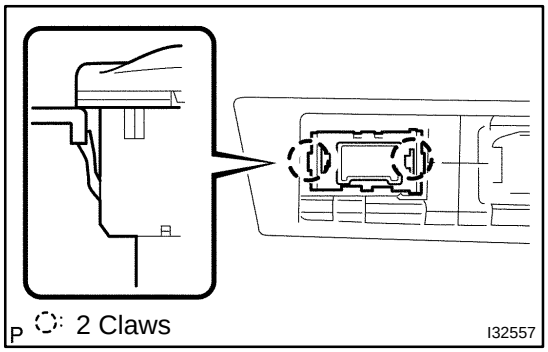

3. **REMOVE POWER POINT SOCKET ASSY NO.2**

(a) Release the 2 fitting claws, remove the power point socket assy No.2.

VOLTAGE INVERTER ASSY

670EQ–01

REPLACEMENT

HINT:

COMPONENTS: See page 67–2

1. DISCONNECT BATTERY NEGATIVE TERMINAL (See page 72–2)

2. REMOVE FRONT SEAT (DRIVER SEAT POSITION) (See page 72–2)

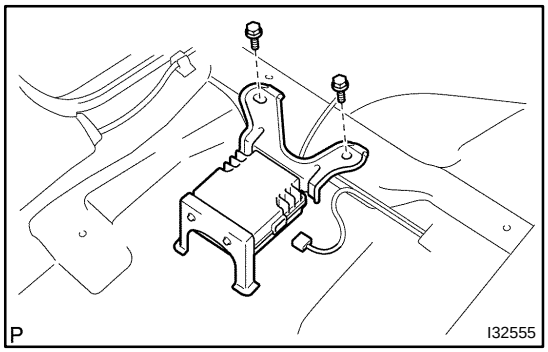

3. REMOVE VOLTAGE INVERTER ASSY

(a) Remove the 2 bolts.

(b) Fold the floor carpet to the inside.

(c) Disconnect the connector.

(d) Remove the voltage inverter assy.

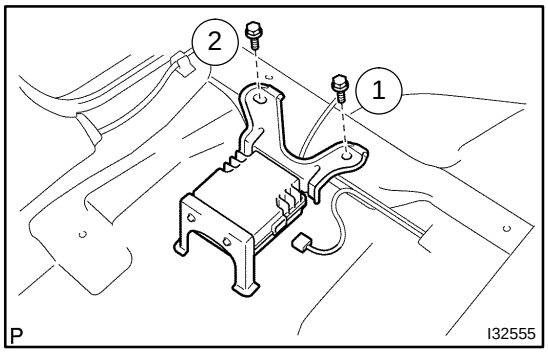

4. INSTALL VOLTAGE INVERTER ASSY

(a) Install the voltage inverter assy.

(b) Connect the connector.

(c) Fold the floor carpet to the inside.

(d) Tighten the 2 bolts.

Torque: 7.0 N·m (71 kgf·cm, 62 in.·lbf)

NOTICE:

Tighten the bolts in following order shown in the illustration to install the voltage inverter assy.

5. INSTALL FRONT SEAT (DRIVER SEAT POSITION) (See page 72–2)

NAVIGATION ANTENNA CORD SUB–ASSY

670EL–01

REPLACEMENT

HINT:

COMPONENTS: See page 67–2

1. REMOVE INSTRUMENT CLUSTER FINISH PANEL SUB–ASSY CENTER (See page 71–10)

2. REMOVE NAVIGATION RECEIVER ASSEMBLY W/BRACKET (See page 67–7)

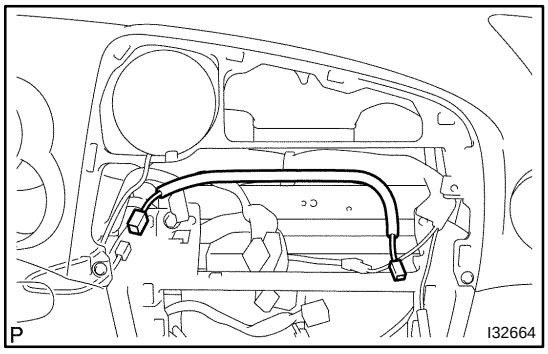

3. REMOVE NAVIGATION ANTENNA CORD SUB–ASSY

(a) Disconnect the connecter, remove the navigation antenna cord sub–assy.

DISC PLAYER CHANGER

670EE–01

REPLACEMENT

HINT:

COMPONENTS: See page 67–2

1. DISCONNECT BATTERY NEGATIVE TERMINAL (See page 72–6)

2. REMOVE FRONT SEAT (PASSENGER SEAT POSITION) (See page 72–6)

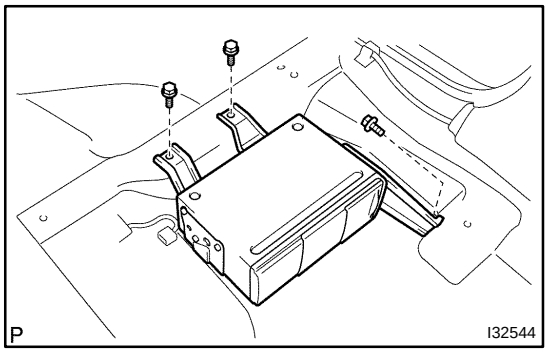

3. REMOVE DISC PLAYER CHANGER

(a) Disconnect the connector.

(b) Remove the 3 bolts and disc player changer.

4. INSTALL FRONT SEAT (PASSENGER SEAT POSITION) (See page 72–6)

ROOF ANTENNA POLE SUB–ASSY

670EK–01

REPLACEMENT

HINT:

COMPONENTS: See page 67–2

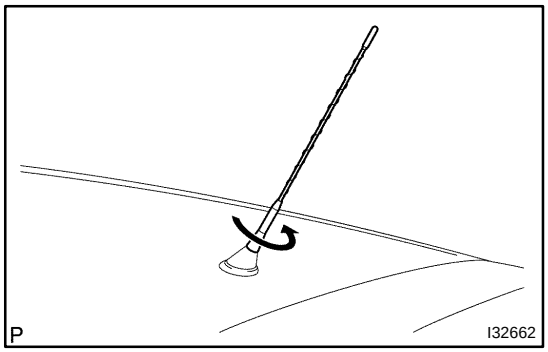

1. REMOVE ROOF ANTENNA POLE SUB–ASSY

(a) Remove the antenna pole sub–assy by turning it in the arrow direction in the illustration.

POWER SOURCE

LOCATION

68038–01

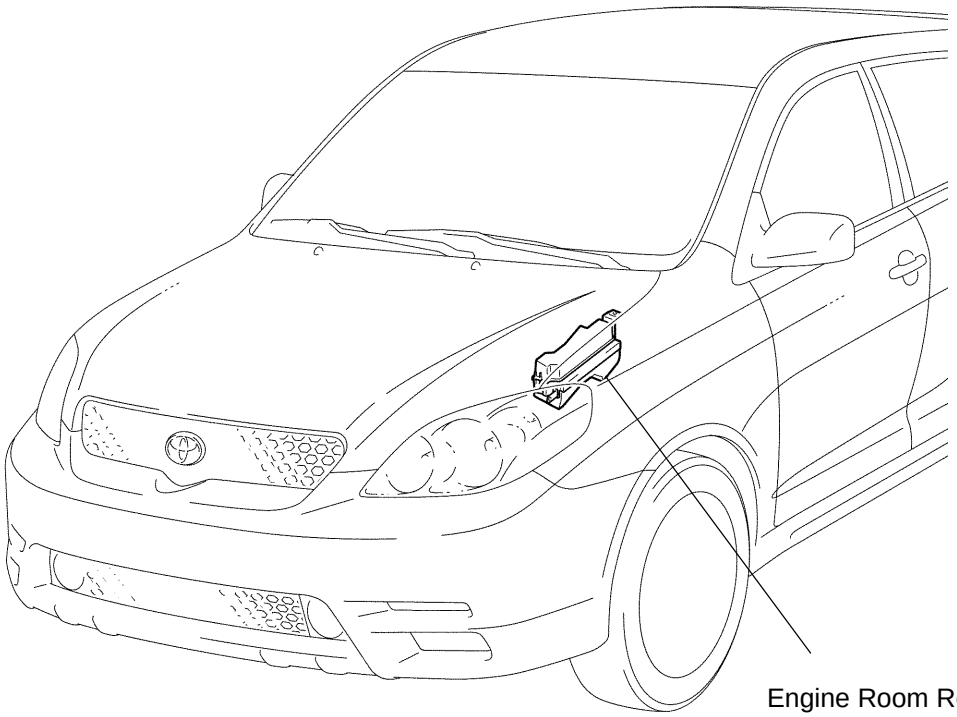

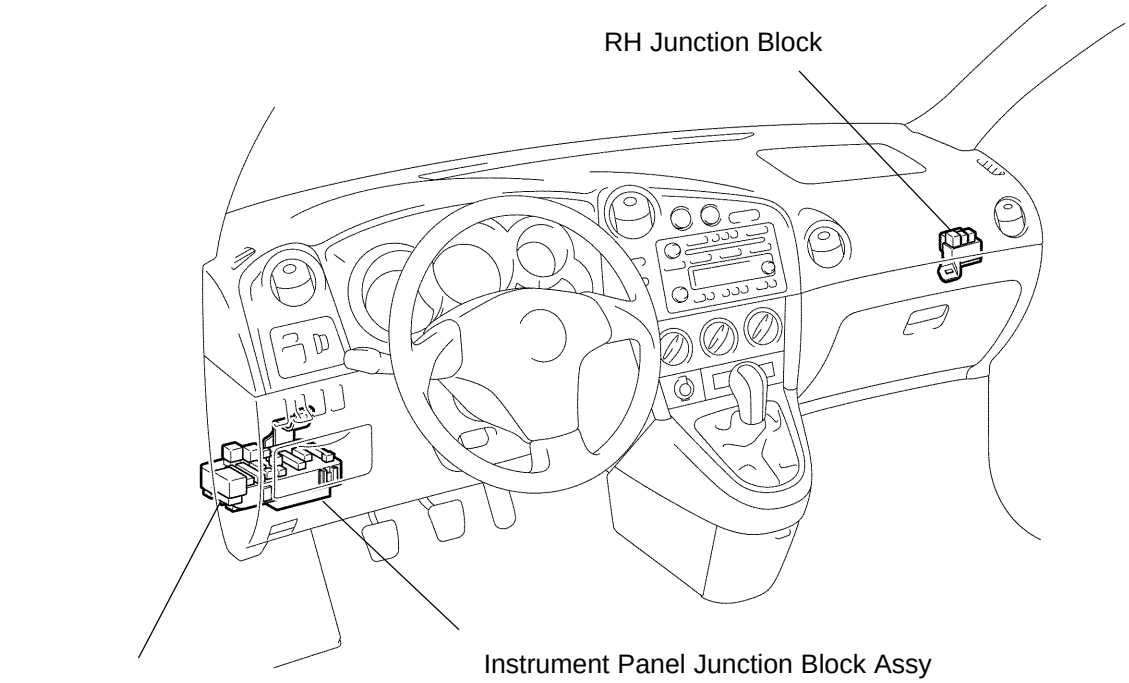

P

I32571

Engine Room Relay Block Assy

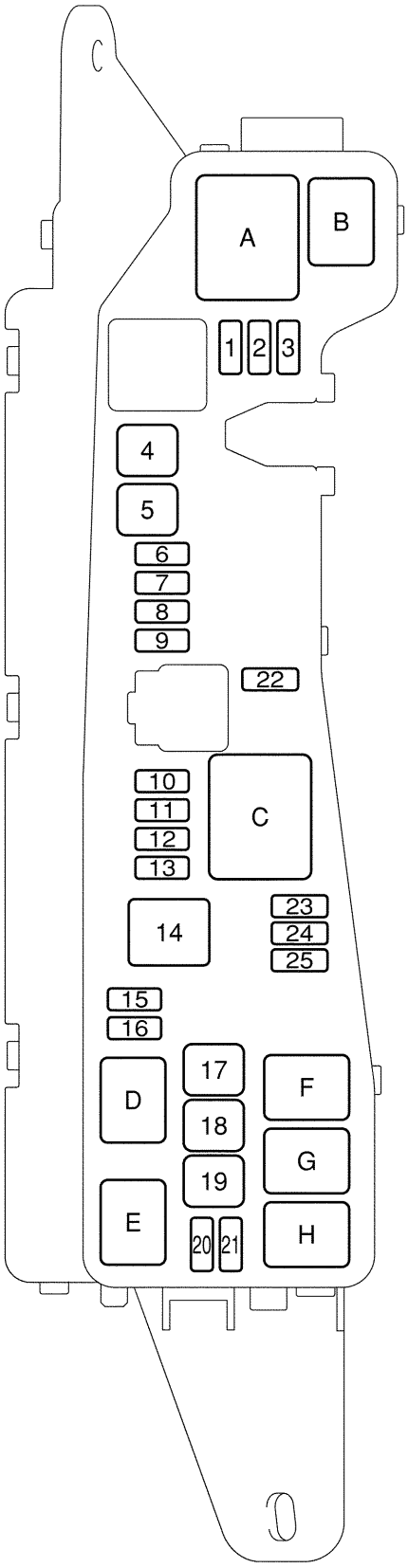

FUSE

1, –	
2, HEAD RH LWR	10 A
3, HEAD LH LWR	10 A
4, –	
5, HEAD MAIN	40 A
6, ALT–S	5 A
7, EFI	15 A
8, HAZARD	10 A
9, HORN	10 A
10, DOME	15 A
11, MAIN	30 A
12, –	
13, –	
14, ALT	100 A
15, HEAD RH UPR	10 A
16, HEAD LH UPR	10 A
17, ABS No. 2	40 A
18, RDI FAN	40 A
19, ABS No. 1	30 A
20, FOG	15 A
21, –	
22, –	
23, SPARE	10 A
24, SPARE	15 A
25, SPARE	30 A

RELAY

A, HEAD	E, FOG
B, M/G CLT	F, HORN
C, DIMMER	G, FAN No. 2
D, EFI	H, FAN No. 1

P

I32288

Instrument Panel Junction Block Assy

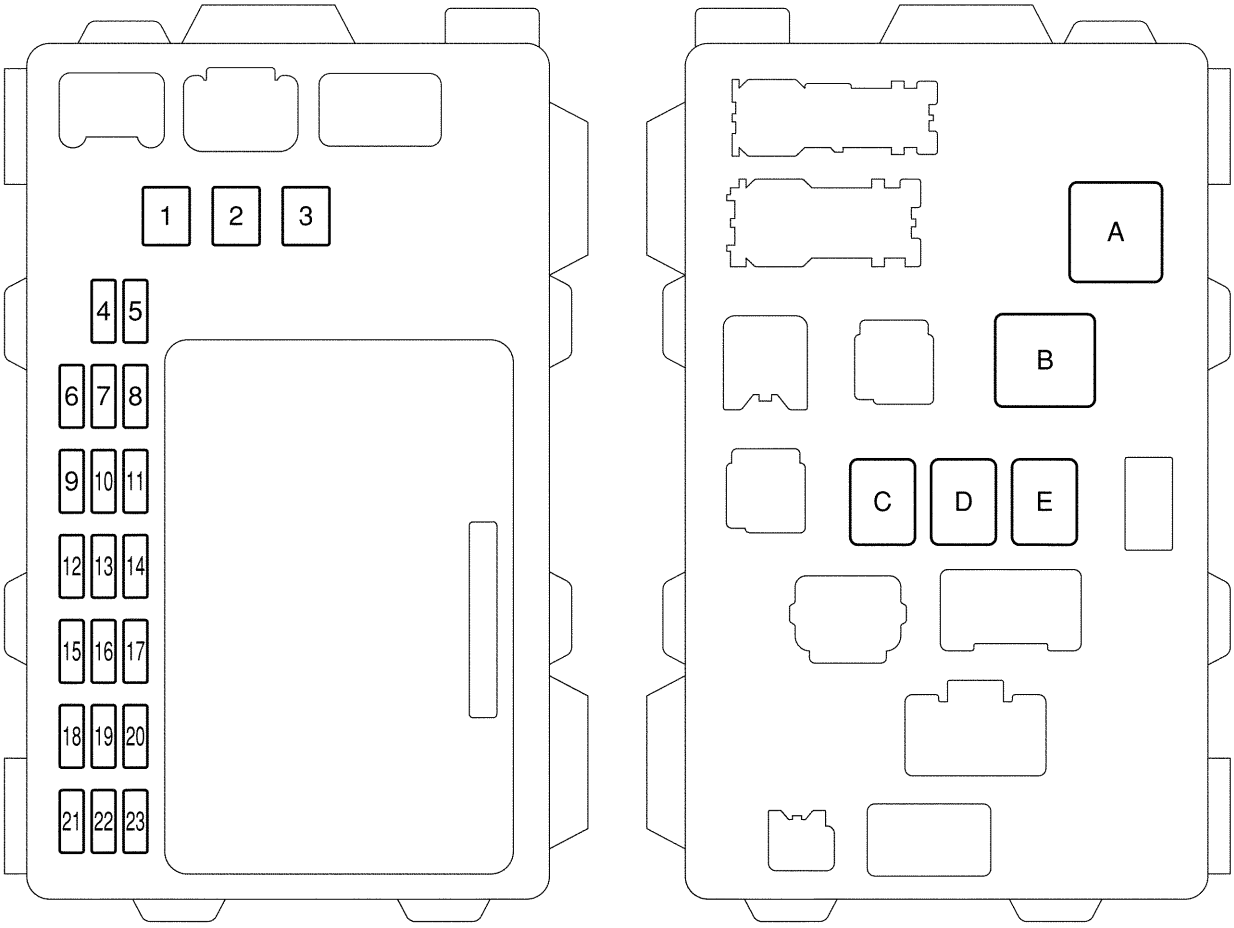

FUSE

1, HEATER	40 A	13, –	
2, DEFOG	30 A	14, CIG	15 A
3, POWER	30 A	15, –	
4, A/C	10 A	16, AM1	25 A
5, M–HTR/DEF I–UP	10 A	17, ECU–B	10 A
6, AM2	15 A	18, OBD	7.5 A
7, RR WIPER	15 A	19, DOOR	25 A
8, WASHER	15 A	20, P/POINT	15 A
9, WIPER	25 A	21, TAIL	15 A
10, ECU–IG	10 A	22, STOP	15 A
11, GAUGE	10 A	23, INV	15 A
12, –			

RELAY

A, ST
B, DEF
C, C/OPN
D, P/W
E, IG 1

P

I32302

RH Junction Block

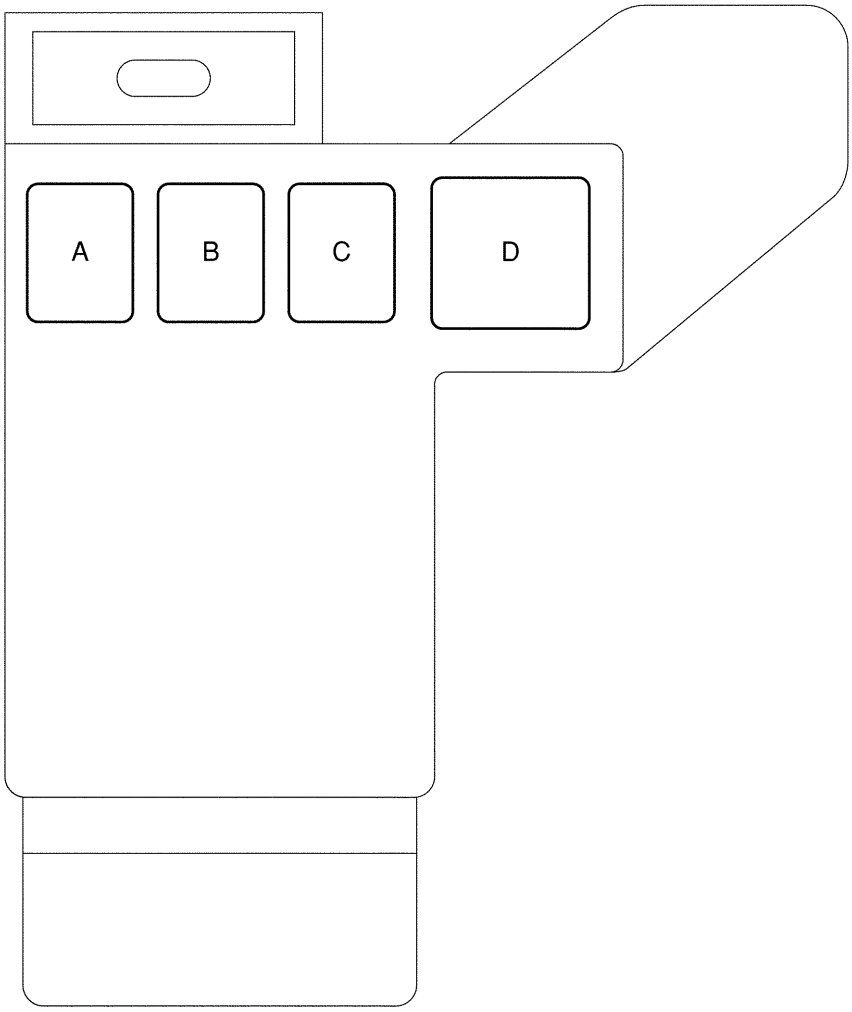

RELAY

A, INVERTER
B, TAIL
C, P–POINT
D, HTR

P

I32570

69049–01

INSPECTION

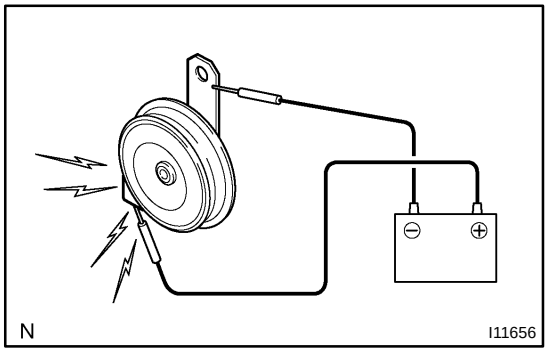

1. INSPECT LOW PITCHED HORN ASSY

(a) Connect the positive (+) lead from the battery to the terminal and the negative (–) lead to the horn body, and check that the horn blows.

If the result is not as specified, replace the horn.

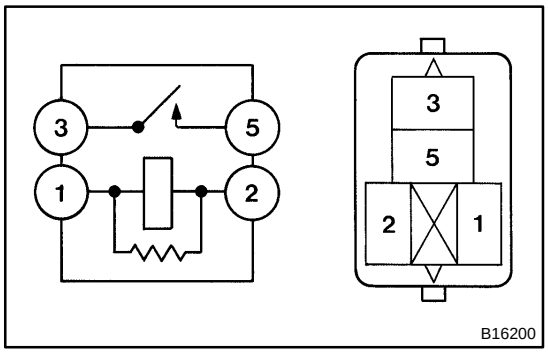

2. INSPECT HORN RELAY ASSY (Marking: HORN)

(a) Remove the horn relay from the engine room R/B and J/B.

(b) Inspect the horn relay continuity.

Standard:

Terminal No.	Condition	Specified condition
1 ⇔ 2	Constant	Continuity
3 ⇔ 5	Apply B+ between terminals 1 and 2	

If the result is not as specified, replace the relay.

HORN SYSTEM

LOCATION

69047–01

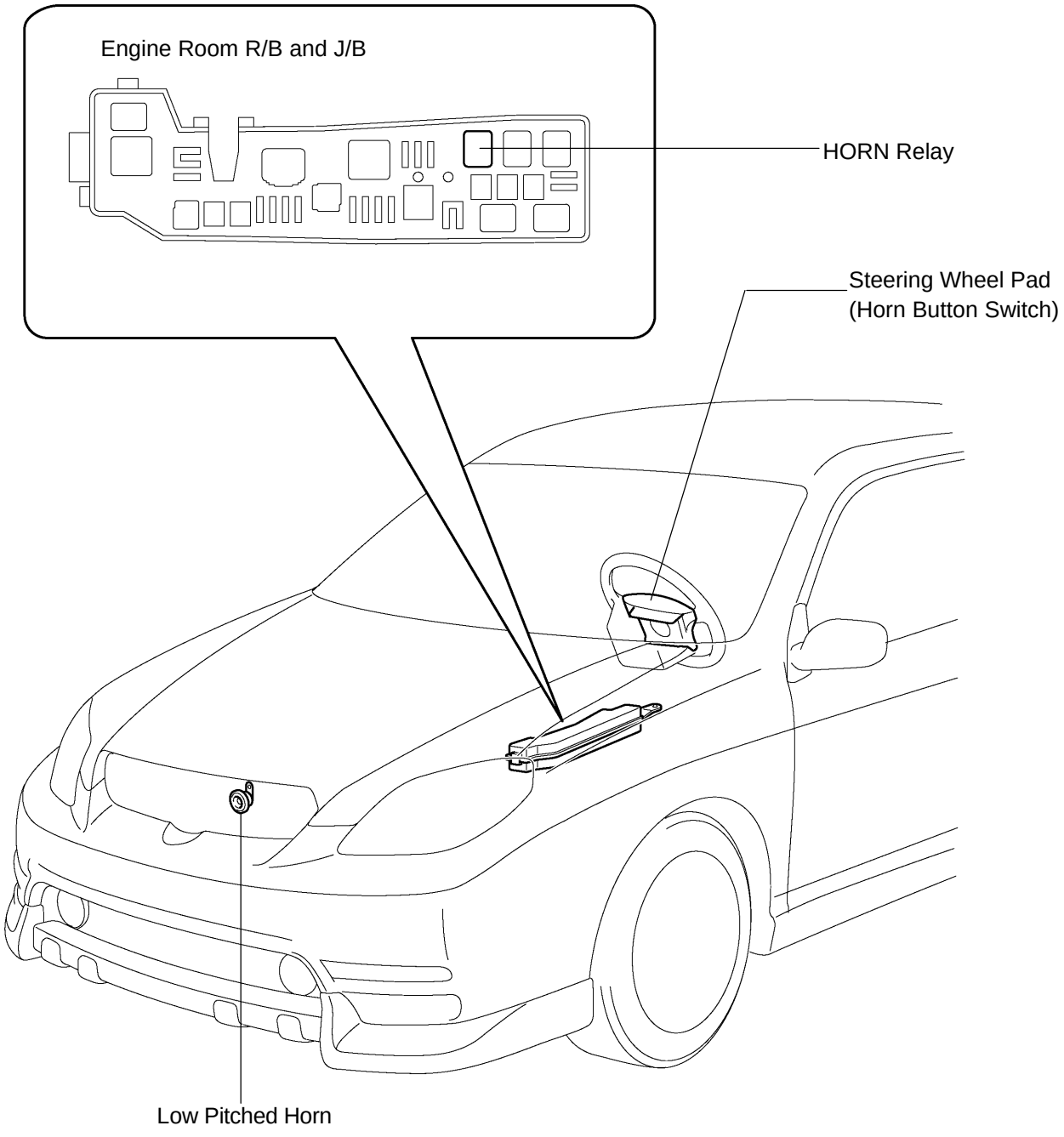

69048–01

PROBLEM SYMPTOMS TABLE

Symptom	Suspected Area	See page
Horn does not sound	2. HORN fuse	–
	3. Horn button switch	–
	4. Low pitched horn	69–3
	5. HORN relay	69–3
	6. Wire harness	–

WINDSHIELD GLASS

COMPONENTS

700HA–01

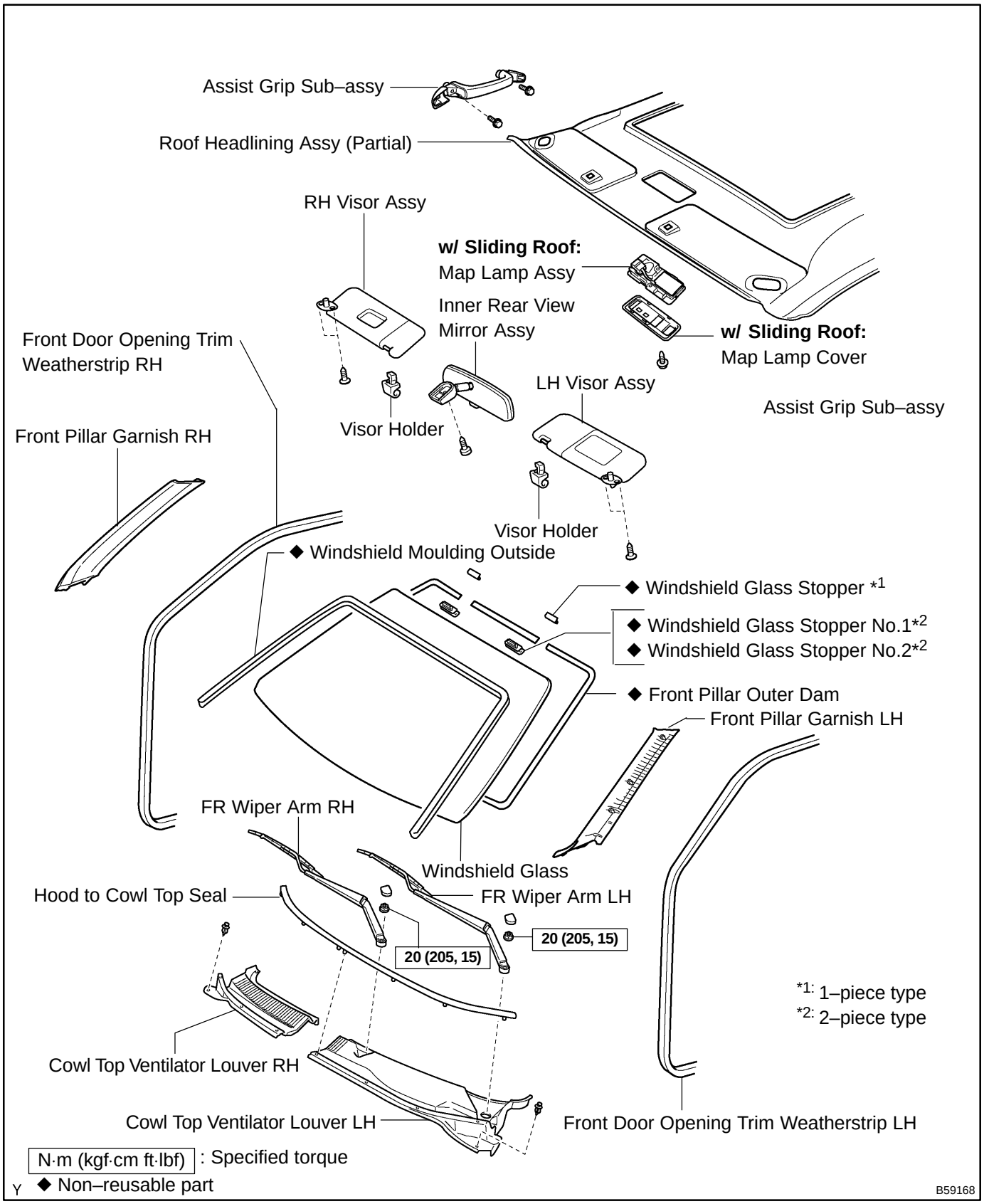

700HB–01

REPLACEMENT

HINT:

Installation is in the reverse order of the removal.

1. **REMOVE FR WIPER ARM RH (See page 66–6)**
2. **REMOVE FR WIPER ARM LH (See page 66–6)**
3. **REMOVE HOOD TO COWL TOP SEAL (See page 66–6)**
4. **REMOVE COWL TOP VENTILATOR LOUVER LH (See page 66–6)**
5. **REMOVE COWL TOP VENTILATOR LOUVER RH (See page 66–6)**
6. **REMOVE FRONT DOOR WEATHERSTRIP RH (See page 76–17)**
7. **REMOVE FRONT DOOR WEATHERSTRIP LH (See page 76–17)**
8. **REMOVE FRONT PILLAR GARNISH RH (See page 76–17)**
9. **REMOVE FRONT PILLAR GARNISH LH (See page 76–17)**
10. **REMOVE INNER REAR VIEW MIRROR ASSY (See page 70–30)**
11. **REMOVE RH VISOR ASSY (See page 76–17)**
12. **REMOVE LH VISOR ASSY (See page 76–17)**
13. **REMOVE GLOVE BOX LAMP ASSY (W/ SLIDING ROOF) (See page 76–17)**
14. **REMOVE ASSIST GRIP SUB–ASSY (See page 76–17)**
15. **REMOVE VISOR HOLDER (See page 76–17)**
16. **REMOVE ROOF HEADLINING ASSY (See page 76–17)**

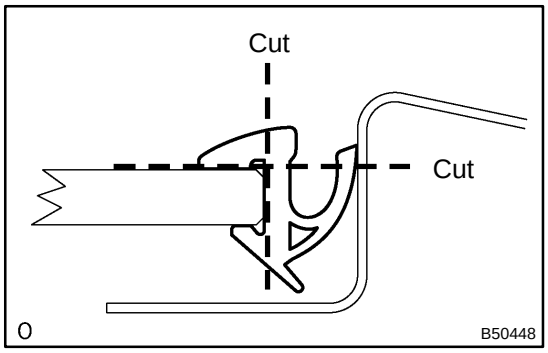

17. REMOVE WINDSHIELD MOULDING OUTSIDE

(a) Using a knife, cut off the moulding as shown in the illustration.

NOTICE:

Do not damage the body with the knife.

(b) Remove the remaining moulding.

HINT:

When removing, make a cut partly, pull and remove it by hand.

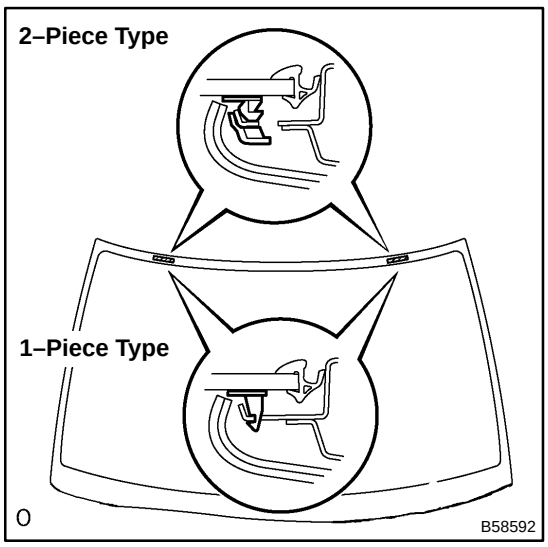

18. REMOVE WINDSHIELD GLASS

HINT:

Depending on a vehicle type, either a 1–piece type or a 2–piece type of stopper is installed.

(a) Push a piano wire through between the body and glass from the interior.

HINT:

Apply protective tape to the outer surface to keep the surface from being scratched.

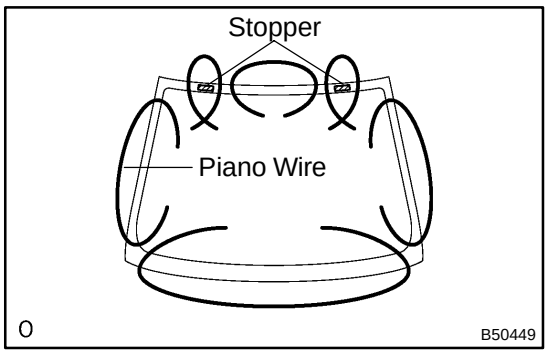

(b) Tie both wire ends to wooden blocks or similar objects.

NOTICE:

- **When separating the glass, take care not to damage the paint and interior/exterior ornaments.**
- **To prevent the piano wire to be cut, do not cross it.**

(c) Cut the adhesive by pulling the piano wire around it.

(d) Using a suction rubber, remove the glass.

NOTICE:

Leave as much adhesive on the body as possible when cutting off the glass.

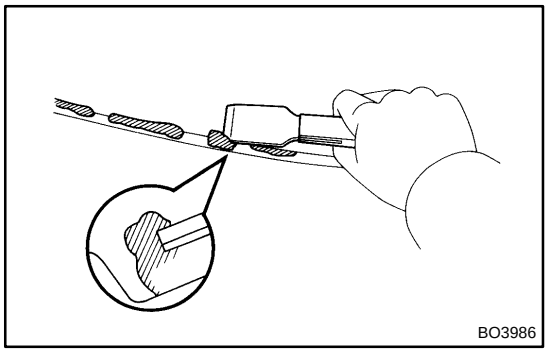

19. CLEAN WINDSHIELD GLASS

(a) Using a scraper, remove the damaged stoppers, dam and adhesive sticking to the glass.

(b) Clean the outer circumference of the glass with white gasoline.

NOTICE:

- **Do not touch the glass after cleaning it.**
- **Be careful not to damage the body.**

20. INSTALL WINDSHIELD GLASS STOPPER NO.1

(a) Install 2 new windshield glass stoppers No.1 to the body.

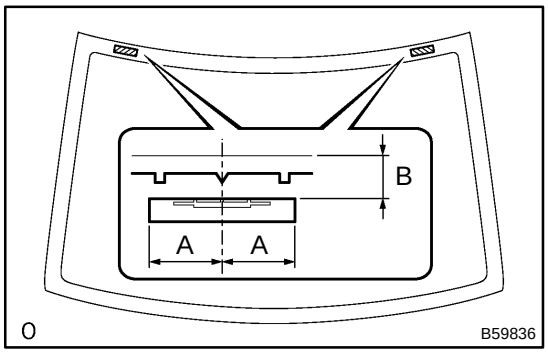

21. INSTALL WINDSHIELD GLASS STOPPER NO.2

(a) Coat the installation part of the stopper with Primer G.

NOTICE:

- **Dry the primer coating for 3 minutes or more.**
- **Do not apply too much primer.**

(b) Install 2 new windshield glass stoppers No.2 onto the glass as shown in the illustration.

A: 40.0 mm (1.575 in.)

B: 7.7 mm (0.303 in.)

22. INSTALL FRONT PILLAR OUTER DAM

(a) Coat the installation part of the front pillar outer dam with Primer G.

NOTICE:

- **Dry the primer coating for 3 minutes or more.**
- **Do not apply too much primer.**

(b) Install 2 new front pillar outer dams with double–stick tape as shown in the illustration.

NOTICE:

Do not touch the glass face after cleaning it.

A: 7 mm (0.28 in.)
B: 22.5 mm (0.886 in.)
C: 45 mm (1.77 in.)
D: 5 mm (0.20 in.)

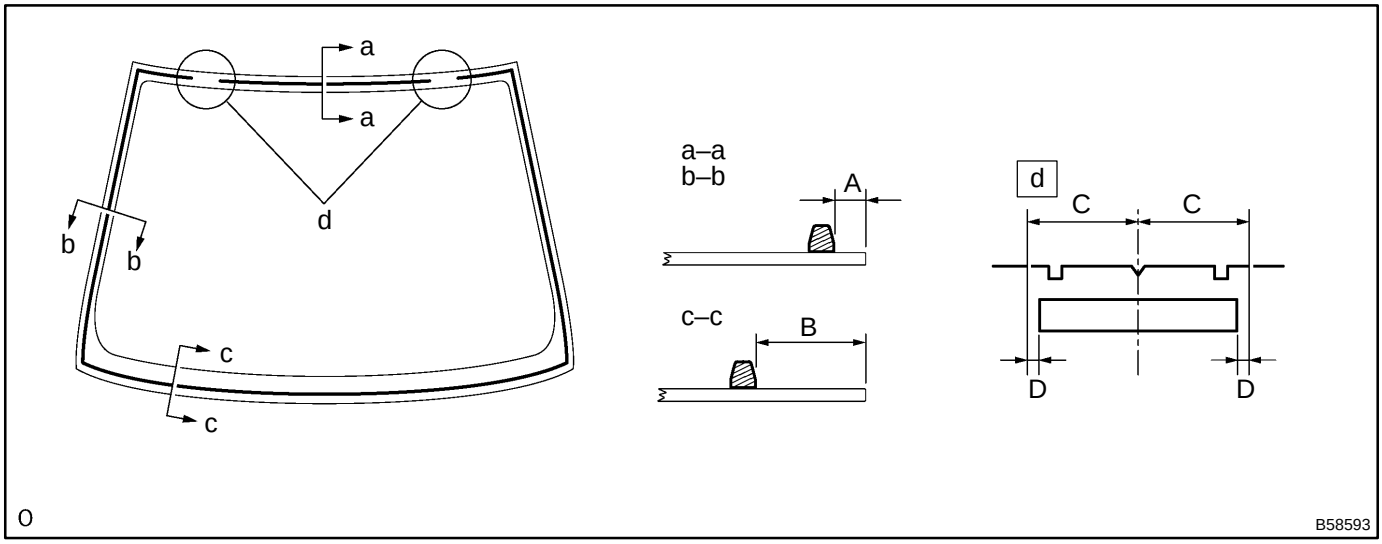

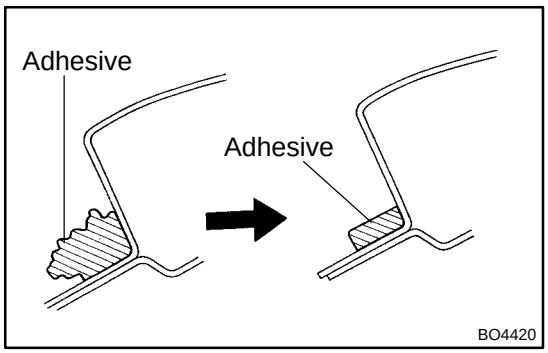

23. INSTALL WINDSHIELD GLASS

(a) Clean and shape the contact surface of the vehicle's body.

(1) Using a knife, cut away any rough areas on the body.

HINT:

Leave as much adhesive on the body as possible.

(2) Clean the cut surface of the adhesive with a piece of shop rag saturated in cleaner.

(b) Position the glass.

(1) Using a suction rubber, place the glass in the correct position.

(2) Check that all the contacting parts of the glass rim are perfectly even.

(3) Place reference marks between the glass and body.

NOTICE:

Check that the stoppers are attached to the body correctly.

HINT:

When reusing the glass, check and correct the reference mark's positions.

(4) Remove the glass.

(c) Coat the contact surface of the body panel with Primer M.

(1) Using a brush, coat the exposed part of the contact surface on the vehicle side with Primer M.

NOTICE:

- **Dry the primer coating for 3 minutes or more.**
- **Do not coat the adhesive with Primer M.**
- **Do not apply too much Primer.**

(d) Coat the contact surface of the glass with Primer G.

(1) Using a brush or sponge, coat the edge of the glass and the contact surface with Primer G.

NOTICE:

- **Dry the primer coating for 3 minutes or more.**
- **Do not apply too much primer.**

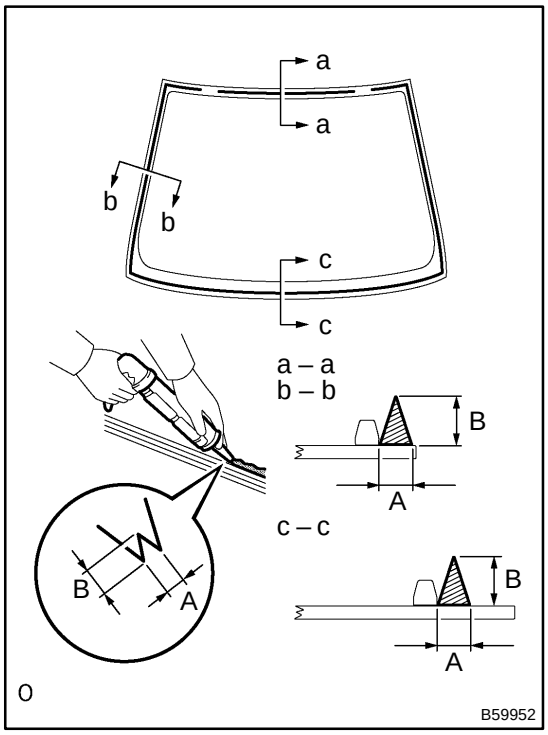

(e) Apply adhesive.

(1) Cut off the tip of the cartridge nozzle as shown in the illustration.

Part No. 08850–00801 or equivalent

HINT:

After cutting off the tip, use all adhesive within the time described in the table below.

Temperature	Tackfree time
35°C (95°F)	15 minutes
20°C (68°F)	100 minutes
5°C (41°F)	8 hours

(2) Load the sealer gun with the cartridge.

(3) Coat the glass with adhesive, as shown in the illustration.

A: 8.0 mm (0.315 in.)

B: 12.5 mm (0.492 in.)

(f) Install the glass.

(1) Using a suction rubber, position the glass so that the reference marks are aligned, and press it in gently along the rim.

NOTICE:

- **Dry the primer coating for 3 minutes or more.**
- **Check that the stoppers are attached to the body correctly.**
- **Check the clearance between the body and glass.**

(2) Lightly press the glass front surface for close contact.

(3) Using a scraper, remove any excess or protruding adhesive.

HINT:

Apply adhesive on the glass rim.

24. INSTALL WINDSHIELD MOULDING OUTSIDE

(a) Install a new windshield moulding to the windshield glass before the adhesive has hardened.

(b) Hold the windshield glass in place securely with protective tape or equivalent until the adhesive has completely hardened.

(c) Using a scraper, remove any excess or protruding adhesive before the adhesive has hardened.

NOTICE:

Take care not to drive the vehicle during the time described in the table below.

Temperature	Tackfree time
35°C (95°F)	1.5 hours
20°C (68°F)	5 hours
5°C (41°F)	24 hours

25. INSPECT FOR LEAK AND REPAIR

(a) Conduct a leak test after the adhesive has completely hardened.

(b) Seal any leak with sealant.

BACK DOOR GLASS

COMPONENTS

700HE–01

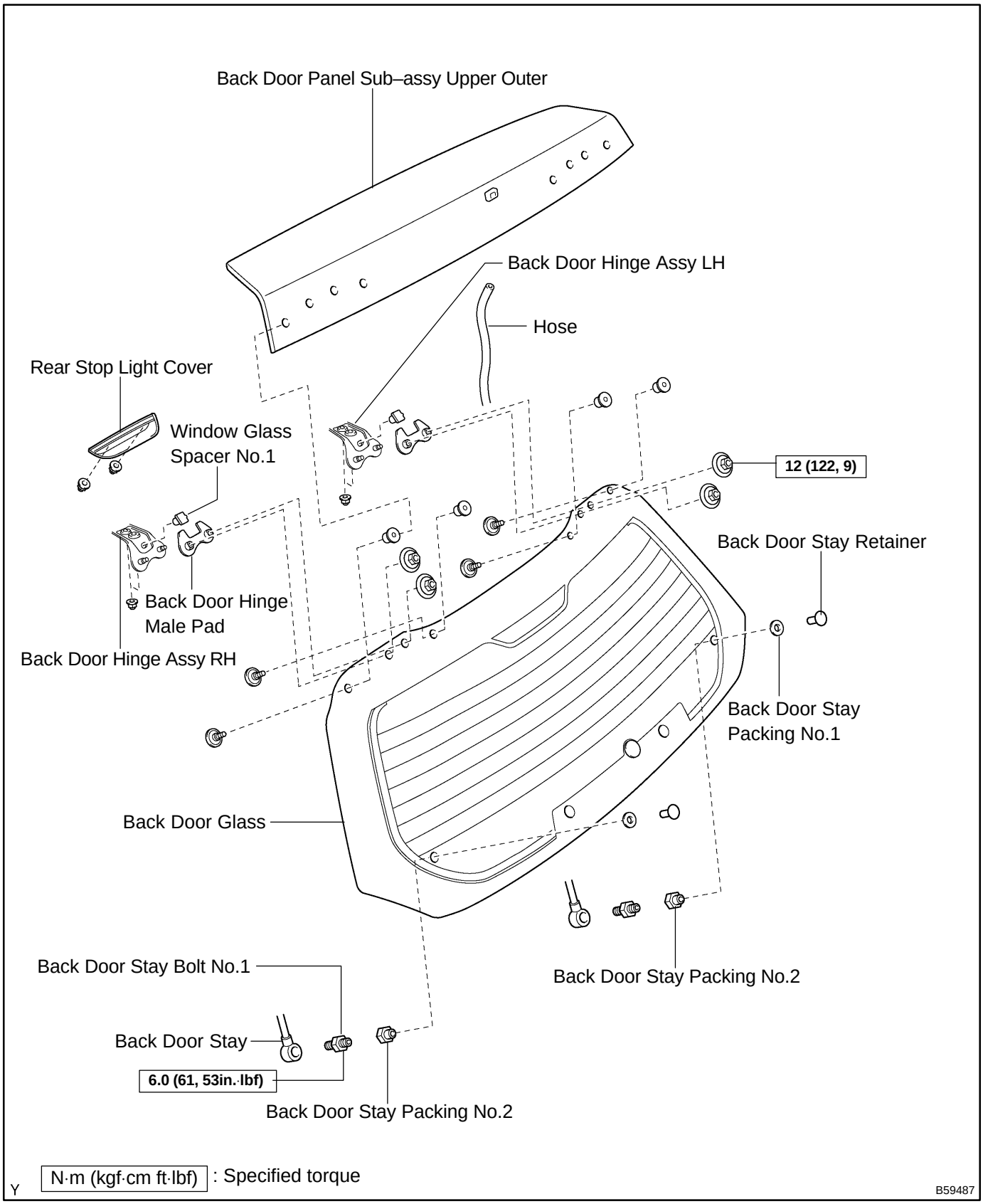

REPLACEMENT

HINT:

Installation is in the reverse order of the removal.

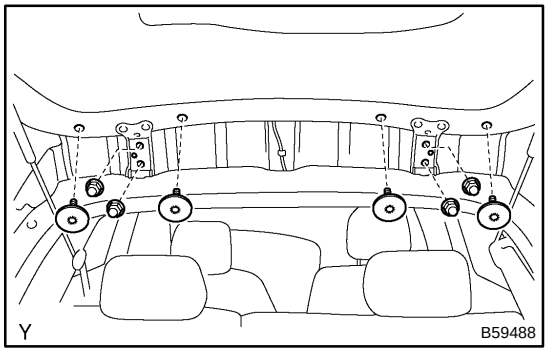

1. REMOVE BACK DOOR PANEL SUB–ASSY UPPER OUTER

(a) Remove the 2 nuts and rear stoplight cover.

(b) Using a torx wrench (T30), remove the 4 screws.

(c) Remove the 4 nuts.

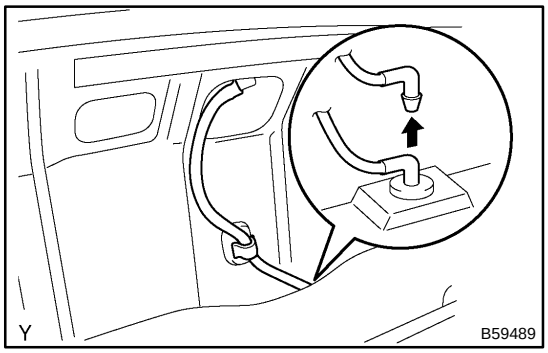

(d) Remove the hose.

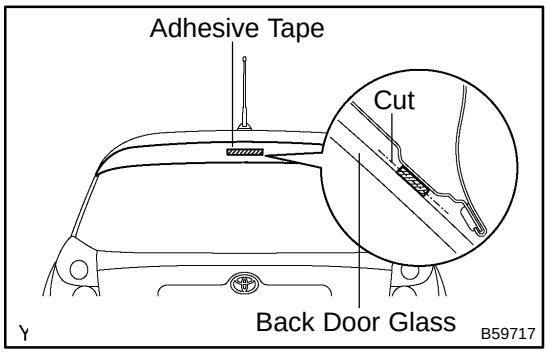

(e) Using a knife, cut off the adhesive tape as shown in the illustration.

(f) Remove the back door panel upper outer,and then disconnect the clamp.

NOTICE:

Do not damage the back door glass with the knife.

2. REMOVE REAR WIPER ARM ASSY (W/ RR WIPER) (See page 66–11)

3. REMOVE REAR WIPER LINK CAP (W/ RR WIPER) (See page 66–11)

4. REMOVE W/WASHER PACKING NUT REAR WIPER LINK PIVOT (W/ RR WIPER) (See page 66–11)

5. REMOVE RR WIPER MOTOR COVER (W/ RR WIPER) (See page 66–11)

6. REMOVE REAR WIPER MOTOR ASSY (W/ RR WIPER) (See page 66–11)

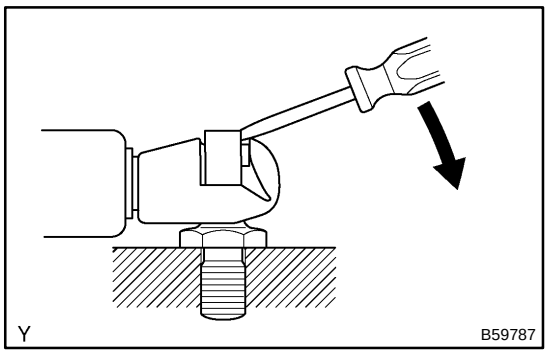

7. REMOVE BACK DOOR GLASS

(a) Using a screwdriver, remove the back door stay from the back door panel.

HINT:

While supporting the back door by hand, remove the back door stay.

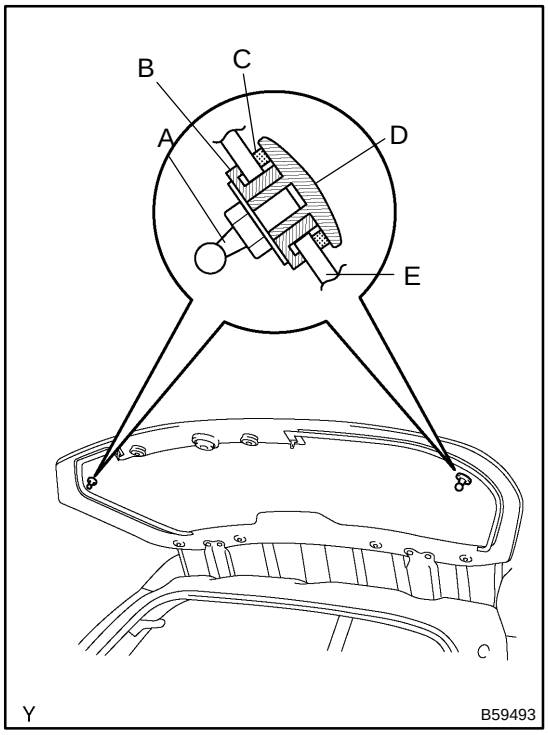

(b) Remove the back door stay bolt No.1, back door stay retainer and back door stay packing No.2 from back door glass.

HINT:

A: Back door stay bolt No.1
B: Back door stay packing No.2
C: Back door stay packing No.1
D: Back door stay retainer
E: Back door glass

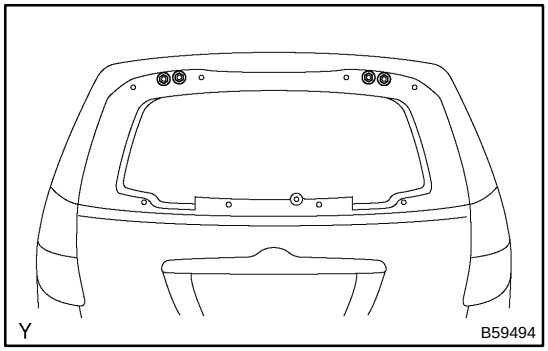

(c) Remove the 4 nuts and back door glass.

8. REMOVE BACK DOOR HINGE ASSY RH

(a) Remove the 2 nuts, window glass spacer No.1, back door hinge male pad and back door glass from the back door hinge assembly RH.

9. REMOVE BACK DOOR HINGE ASSY LH

10. INSTALL BACK DOOR GLASS

Torque: 12 N·m (122 kgf·cm, 9 ft·lbf)

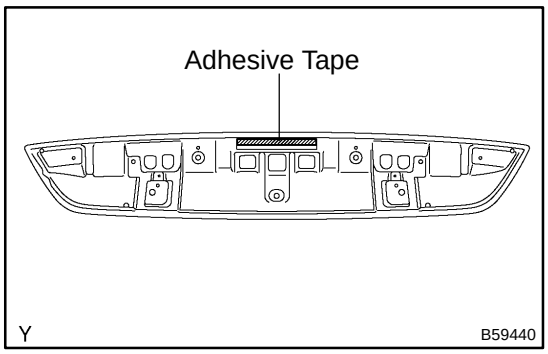

11. INSTALL BACK DOOR PANEL SUB–ASSY UPPER OUTER

(a) If reusing the back door panel upper outer:
Clean the back door panel upper outer.
(1) Remove the adhesive tape from the back door panel upper outer.
(2) Wipe off the stains with cleaner.

(b) Apply new adhesive tape to the back door panel upper outer as shown in the illustration.

(c) Install the back door panel upper outer with the 4 screws and 4 nuts.

QUARTER WINDOW ASSY LH

COMPONENTS

700HC–01

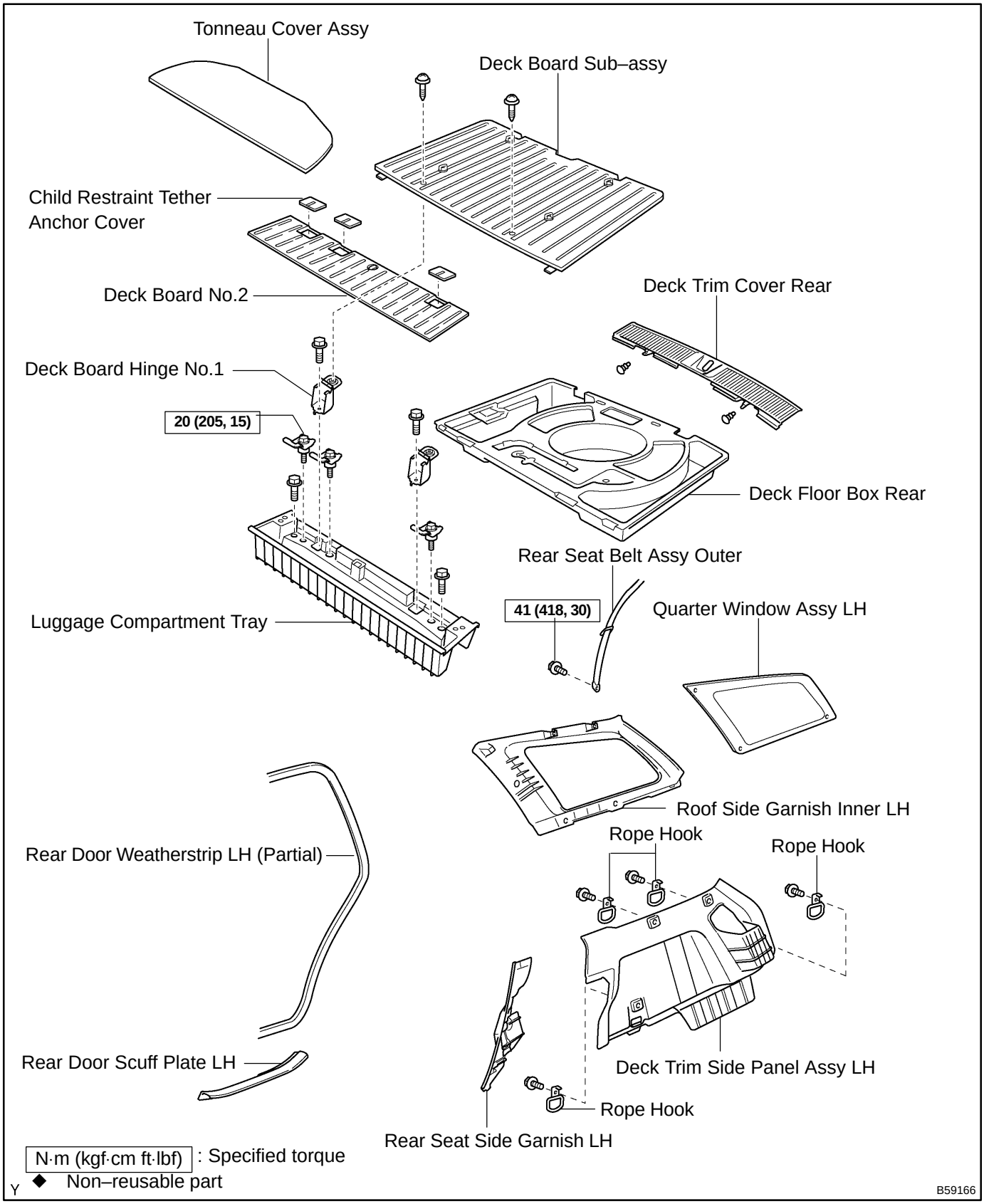

700HD–01

REPLACEMENT

HINT:

- Installation is in the reverse order of the removal.
- In the RH side, work in the same procedure as in the LH side.

1. **REMOVE REAR SEAT ASSY LH (See page 72–10)**
2. **REMOVE DECK BOARD SUB–ASSY (See page 76–17)**
3. **REMOVE DECK BOARD NO.2 (See page 76–17)**
4. **REMOVE LUGGAGE COMPARTMENT TRAY (See page 76–17)**
5. **REMOVE DECK FLOOR BOX REAR (See page 76–17)**
6. **REMOVE TONNEAU COVER ASSY (See page 76–17)**
7. **REMOVE DECK TRIM COVER REAR (See page 76–17)**
8. **REMOVE REAR DOOR SCUFF PLATE LH (See page 76–17)**
9. **REMOVE REAR DOOR WEATHERSTRIP LH (See page 76–17)**
10. **REMOVE REAR SEAT SIDE GARNISH LH (See page 76–17)**
11. **REMOVE DECK TRIM SIDE PANEL ASSY LH (See page 76–17)**
12. **REMOVE ROOF SIDE GARNISH INNER RH (See page 76–17)**

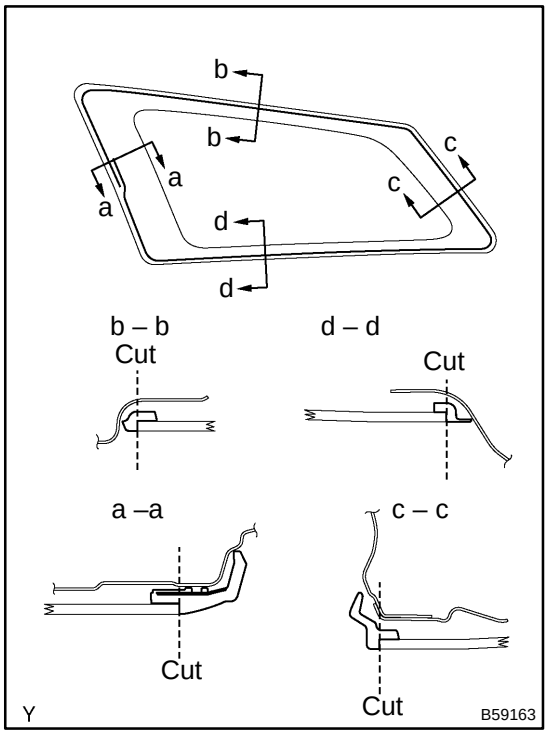

13. **REMOVE QUARTER WINDOW ASSY LH**

(a) Using a knife, cut off the moulding as shown in the illustration.

NOTICE:

Do not damage the body with the knife.

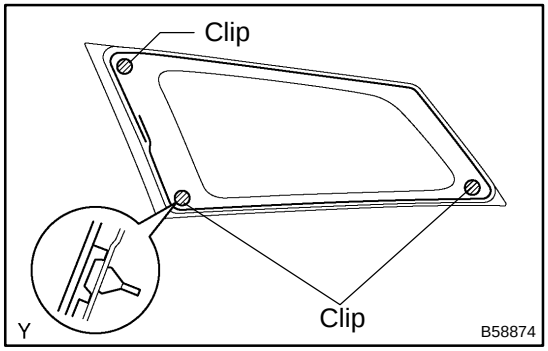

(b) Push a piano wire through between the body and glass from the interior.

(c) Tie both wire ends to wooden blocks or similar objects.

HINT:

Apply protective tape to the outer surface to keep it from being scratched.

NOTICE:

- **When separating the glass, take care not to damage the paint and interior/exterior ornaments.**
- **To prevent the piano wire to be cut, do not cross it.**

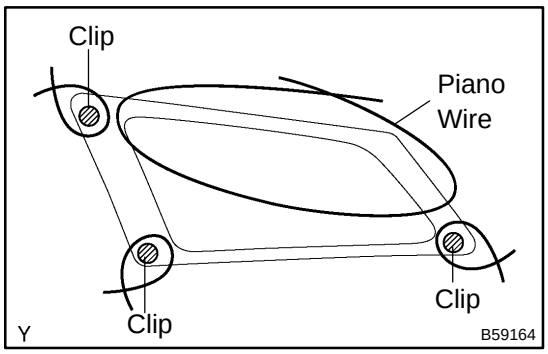

(d) Cut the adhesive by pulling the piano wire around it.
(e) Disengage the spacers and clips.
(f) Using a suction rubber, remove the quarter window assembly LH.

NOTICE:

Leave as much adhesive on the body as possible when cutting off the glass.

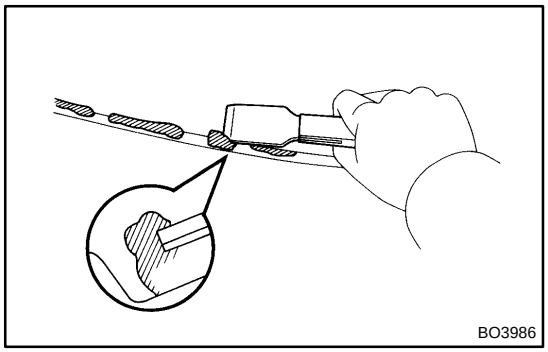

14. CLEAN QUARTER WINDOW ASSY LH

(a) Using a scraper, remove the damaged clips and adhesive sticking to the glass.
(b) Clean the outer circumference of the glass with white gasoline.

NOTICE:

- **Do not touch the glass after cleaning it.**
- **Be careful not to damage the body.**

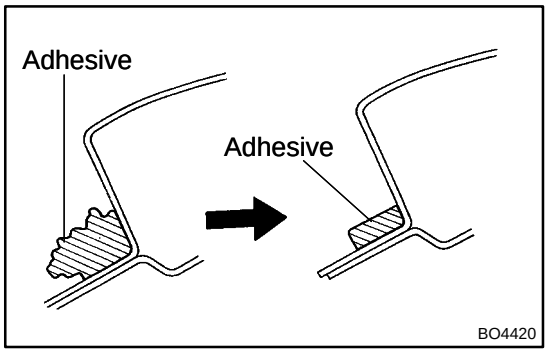

15. INSTALL QUARTER WINDOW ASSY LH

(a) Clean and shape the contact surface of the body panel.
  (1) Using a knife, cut away any rough areas on the body panel.

HINT:

Leave as much adhesive on the body panel as possible.

  (2) Clean the cut surface of the adhesive with a piece of shop rag saturated in cleaner.

(b) Coat the contact surface of the body panel with Primer M.
  (1) Using a brush, coat the exposed part of the contact surface on the vehicle side with Primer M.

NOTICE:

- **Dry the primer coating for 3 minutes or more.**
- **Do not keep any of the opened Primer M for later use.**
- **Do not apply too much primer.**
- **Pay special attention in coating joints of panels and welded parts.**

(c) Coat the contact surface of the glass with Primer G.
  (1) Using a brush or sponge, coat the edge of the glass and the contact surface with Primer G.
  (2) When the primer is coated wrongly to the area other than the specified, wipe it off with a clean shop rag before the primer dries.

NOTICE:

- **Dry the primer coating for 3 minutes or more.**
- **Do not keep any of the opened Primer G for later use.**
- **Do not apply too much primer.**

(d) Apply adhesive.

(1) Cut off the tip of the cartridge nozzle as shown in the illustration.

Part No. 08850–00801 or equivalent

HINT:

After cutting off the tip, use all adhesive within the time described in the table below.

Temperature	Tackfree time
35°C (95°F)	15 minutes
20°C (68°F)	100 minutes
5°C (41°F)	8 hours

(2) Load the sealer gun with the cartridge.

(3) Coat the glass with adhesive as shown in the illustration.

A: 8 mm (0.315 in.)

B: 12 mm (0.472 in.)

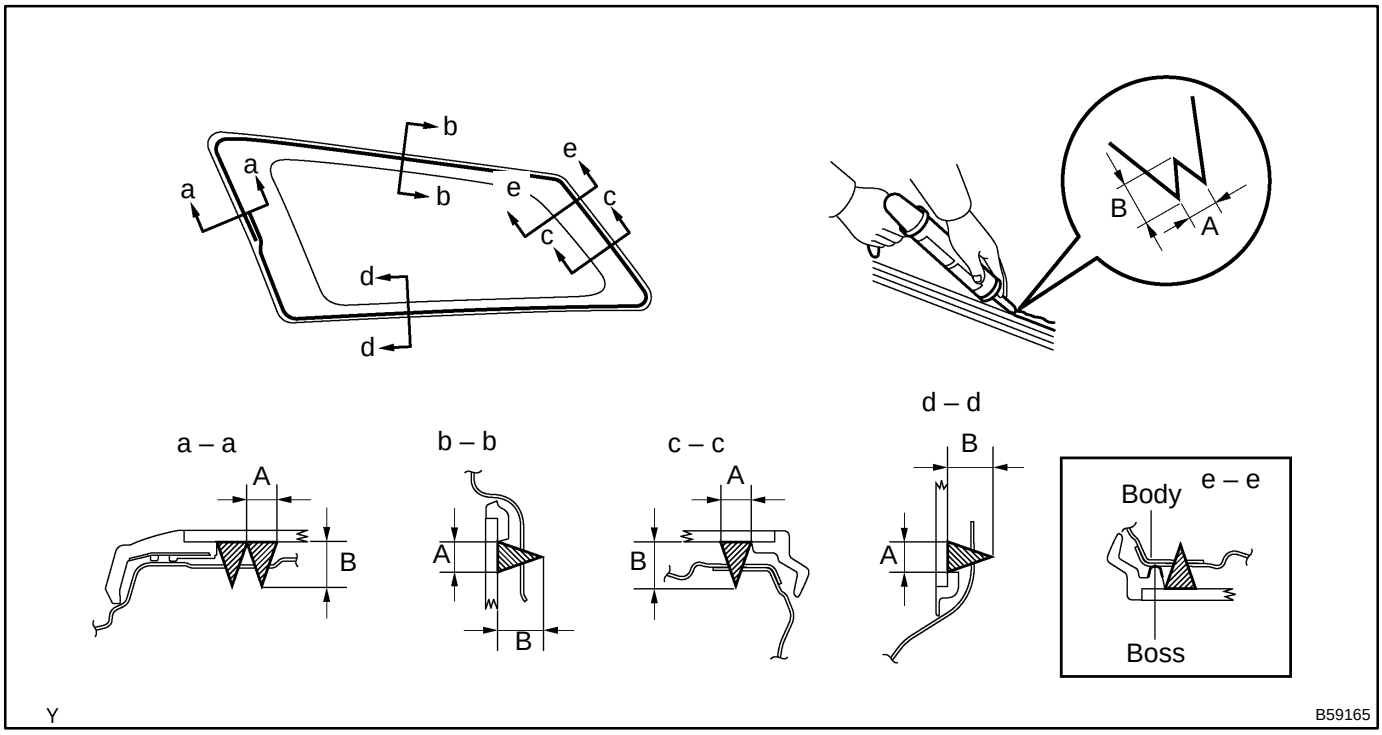

(e) Install the quarter window assembly LH.

(1) Using a suction rubber, install the quarter window assembly.

(2) Push the part ”e – e” until the boss touches the body.

NOTICE:

- **Install the glass after the primer on the vehicle’s body has completely dried.**
- **Check that the clip are locked to the body correctly.**

(3) Lightly press the glass front surface for close contact.

(4) Hold the glass in place securely with protective tape or equivalent until the adhesive has completely hardened.

NOTICE:

Take care not to drive the vehicle during the time described in the table below.

Temperature	Tackfree time
35°C (95°F)	15 minutes
20°C (68°F)	100 minutes
5°C (41°F)	8 hours

16. INSPECT FOR LEAK AND REPAIR

(a) Conduct a leak test after the adhesive has completely hardened.

(b) Seal any leak with sealant.

700HI–01

INSPECTION

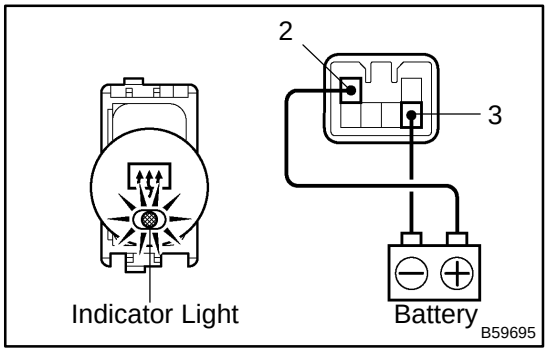

1. INSPECT REAR WINDOW DEFOGGER SWITCH ASSY

(a) Inspect the defogger switch continuity.

(1) Connect the positive (+) lead from the battery to terminal 2 and negative (–) lead to terminal 3, and then check that the indicator light will light up.

If the result is not as specified, replace the switch or bulb.

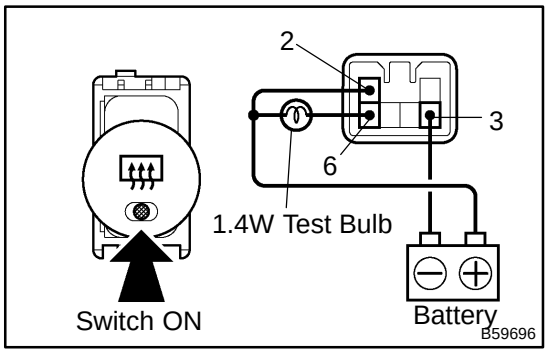

(b) Inspect the defogger timer operation.

(1) Connect the positive (+) lead from the battery to terminal 2 and negative (–) lead to terminal 3.

(2) Connect the positive (+) lead from the battery to terminal 6 through a 1.4 W test bulb.

(3) Push the defogger switch ON, and check that the indicator light in the switch and test bulb will light up for 12 to 18 minutes then the indicator light and test bulb will go out.

If the result is not as specified, replace the switch.

2. INSPECT DEFOGGER RELAY (Marking: DEF)

(a) Remove the defogger relay from the instrument panel J/B.

(b) Inspect the defogger relay continuity.

Standard:

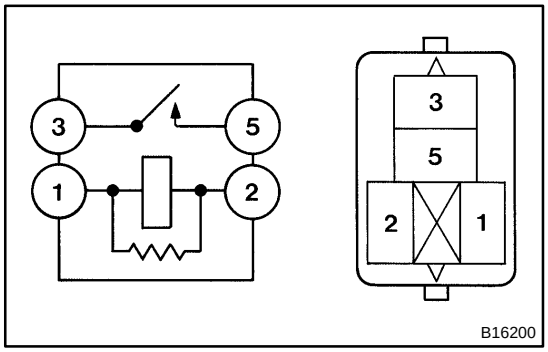

Terminal No.	Condition	Specified condition
1 ⇔ 2	Constant	Continuity
3 ⇔ 5	Apply B+ between terminals 1 and 2	Continuity

If the result is not as specified, replace the relay.

WINDOW DEFOGGER SYSTEM

LOCATION

700HG–01

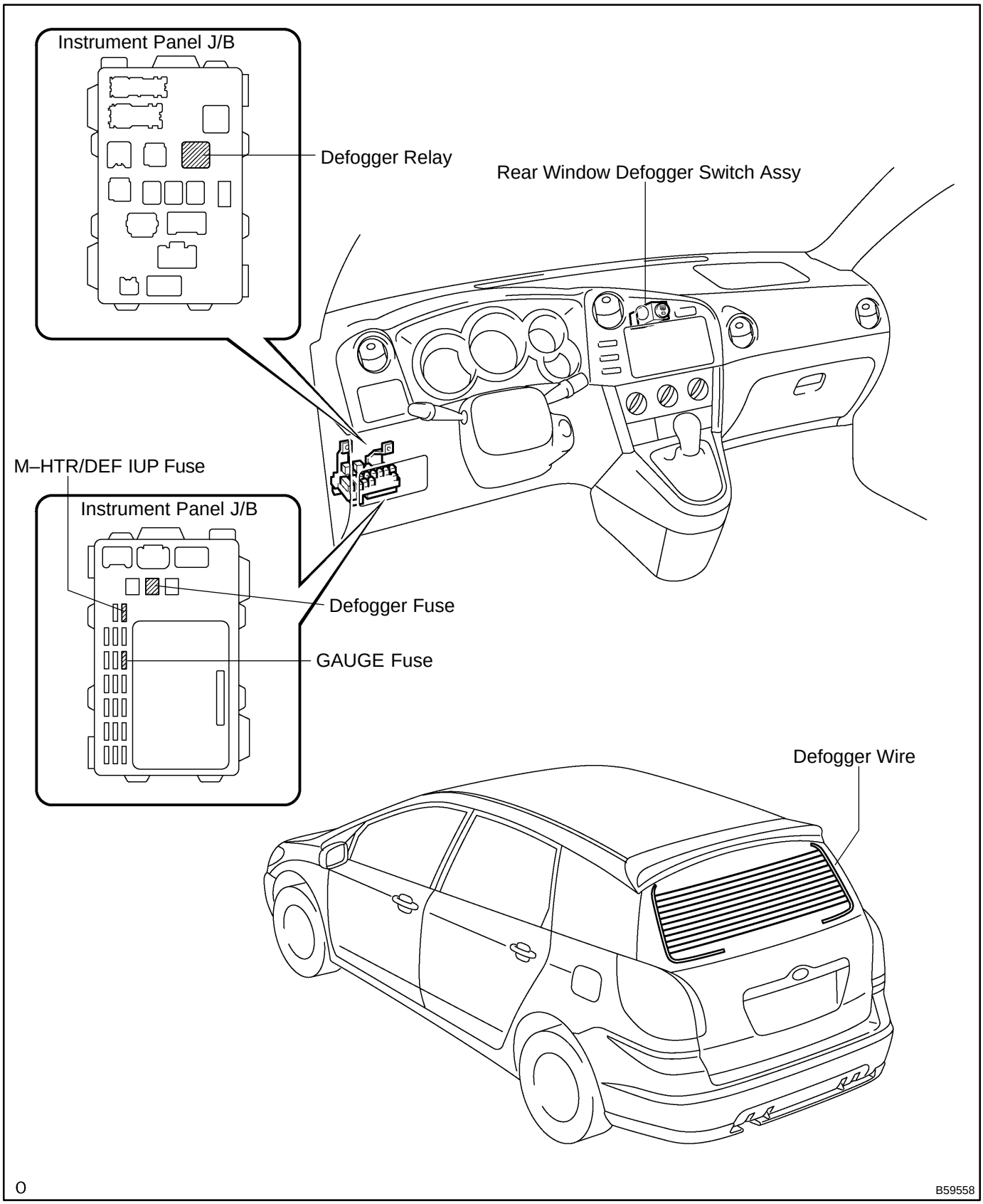

700HH–02

PROBLEM SYMPTOMS TABLE

Symptom	Suspected Area	See page
Rear window defogger does not operate (Indicator light on)	2. M–HTR/DEF IUP fuse	–
	3. DEF fuse	
	4. DEF relay	68–1
	5. Rear window defogger wire	
	6. Wire harness	–
Rear window defogger does not operate (Indicator light off)	1. GAUGE fuse	
	2. Defogger switch	70–26
	3. Air control assembly	–
	4. Wire harness	

700HK–01

INSPECTION

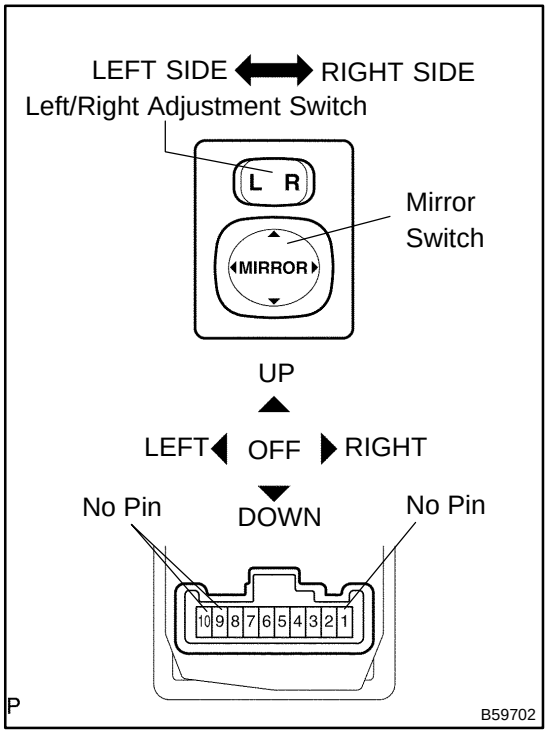

1. INSPECT OUTER MIRROR SWITCH ASSY

(a) Left side for left/right adjustment switch:
Inspect the mirror switch continuity.

Standard (Left side):

Terminal No.	Switch position	Specified condition
–	OFF	No continuity
4 ⇔ 8 6 ⇔ 7	UP	Continuity
4 ⇔ 7 6 ⇔ 8	DOWN	Continuity
5 ⇔ 8 6 ⇔ 7	LEFT	Continuity
5 ⇔ 7 6 ⇔ 8	RIGHT	Continuity

If the result is not as specified, replace the switch assembly.

(b) Right side for left/right adjustment switch:
Inspect the mirror switch continuity.

Standard (Right side):

Terminal No.	Switch position	Specified condition
–	OFF	No continuity
3 ⇔ 8 6 ⇔ 7	UP	Continuity
3 ⇔ 7 6 ⇔ 8	DOWN	Continuity
2 ⇔ 8 6 ⇔ 7	LEFT	Continuity
2 ⇔ 7 6 ⇔ 8	RIGHT	Continuity

If the result is not as specified, replace the switch assembly.

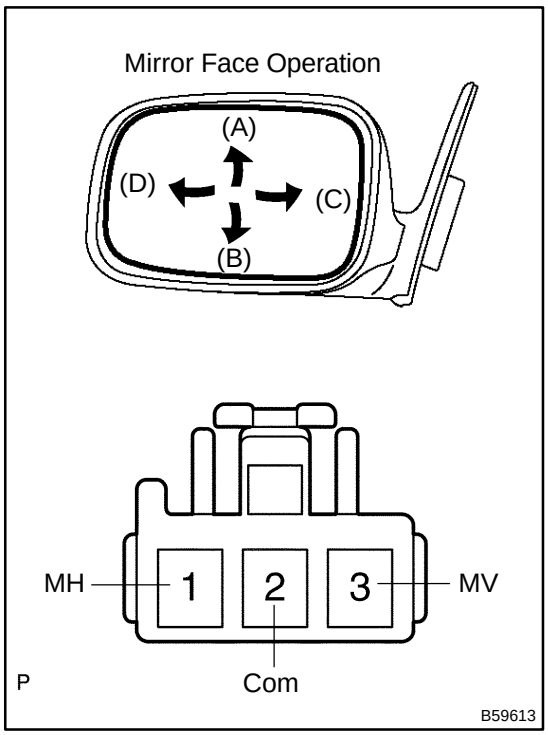

2. INSPECT OUTER REAR VIEW MIRROR ASSY LH

(a) Disconnect the outer rear view mirror assembly LH connector.

(b) Apply battery voltage and inspect the mirror motor face operation, as shown in the table and illustration.

Standard (LH):

Battery connection	Mirror position
Positive (+) ⇔ MV (3) Negative (–) ⇔ Com (2)	Turn upward (A)
Positive (+) ⇔ Com (2) Negative (–) ⇔ MV (3)	Turn downward (B)
Positive (+) ⇔ Com (2) Negative (–) ⇔ MH (1)	Turn left (C)
Positive (+) ⇔ MH (1) Negative (–) ⇔ Com (2)	Turn right (D)

If the result is not as specified, replace the mirror assembly.

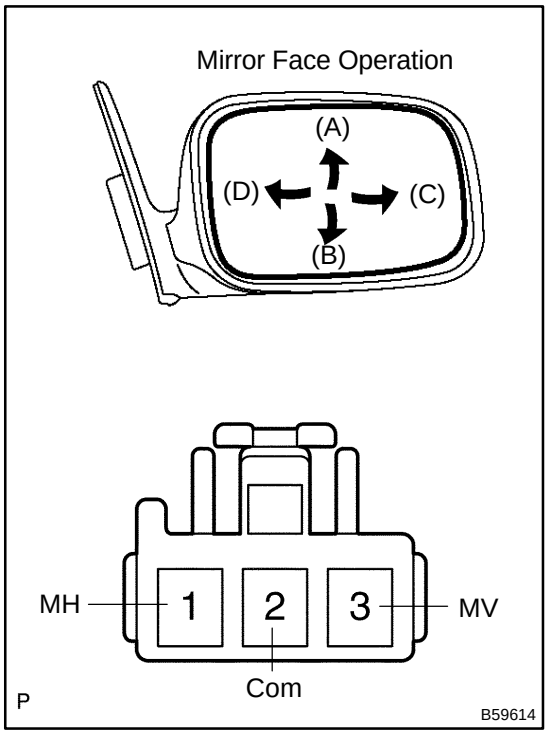

3. INSPECT OUTER REAR VIEW MIRROR ASSY RH

(a) Disconnect the outer rear view mirror assembly RH connector.

(b) Apply battery voltage and inspect the mirror motor face operation, as shown in the table and illustration.

Standard (RH):

Battery connection	Mirror position
Positive (+) ⇔ MV (3) Negative (–) ⇔ Com (2)	Turn upward (A)
Positive (+) ⇔ Com (2) Negative (–) ⇔ MV (5)	Turn downward (B)
Positive (+) ⇔ Com (2) Negative (–) ⇔ MH (1)	Turn right (D)
Positive (+) ⇔ MH (1) Negative (–) ⇔ Com (2)	Turn left (C)

If the result is not as specified, replace the mirror assembly.

POWER MIRROR CONTROL SYSTEM

LOCATION

700HJ–01

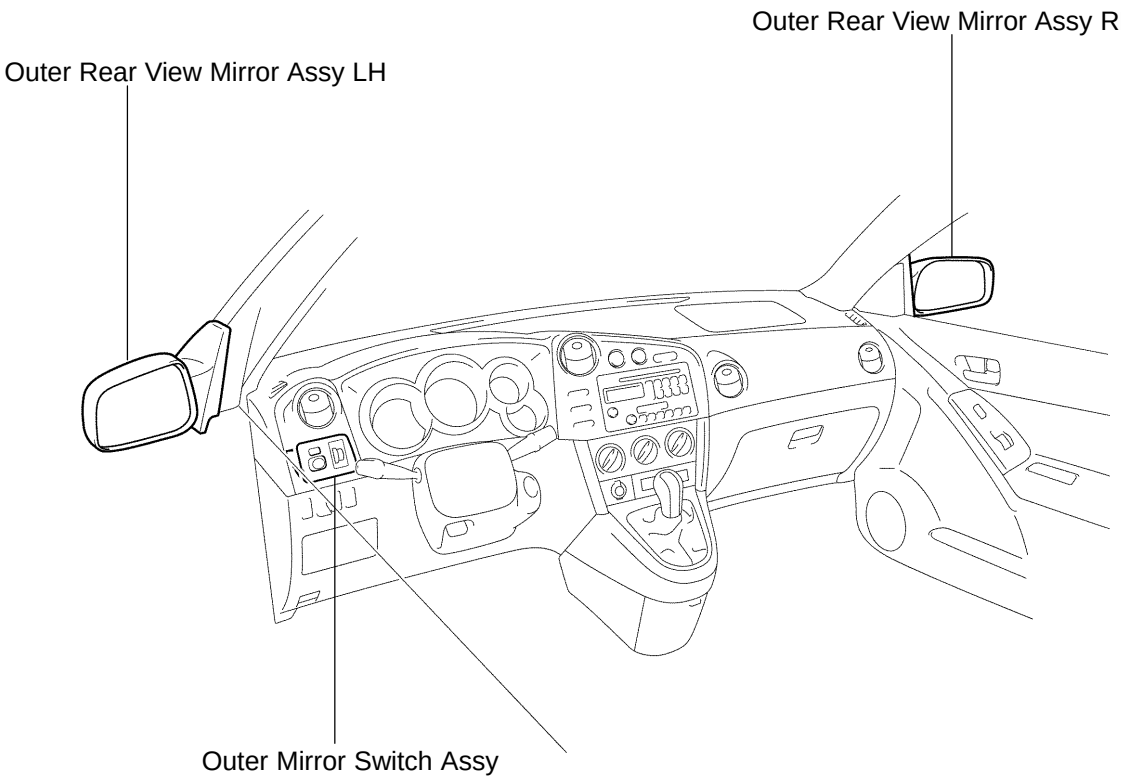

B59701

700HM–01

INSPECTION

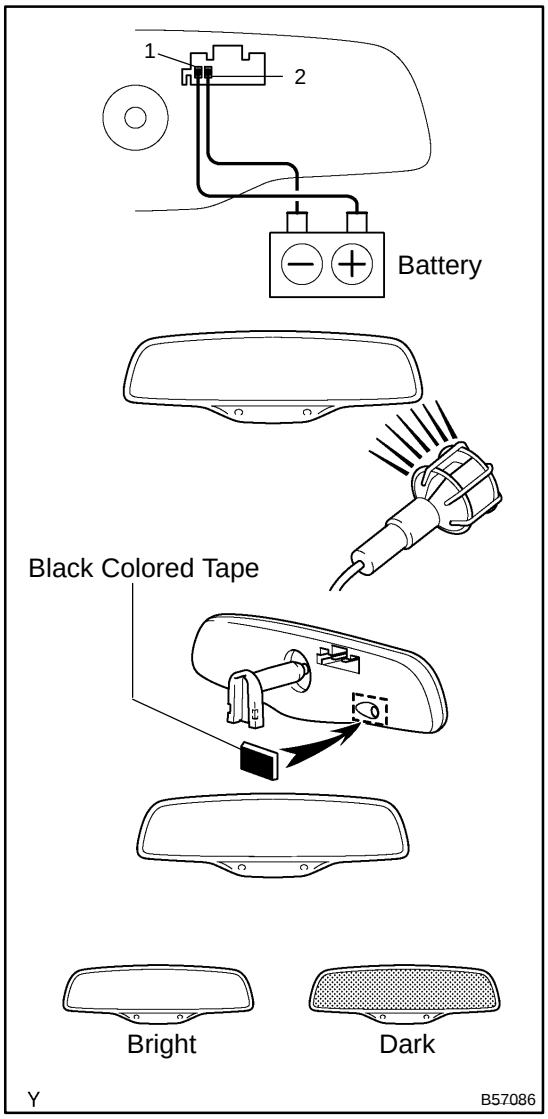

1. REMOVE INNER REAR VIEW MIRROR ASSY

(a) Inspect the electro chromic inner mirror operation.

(1) Connect the positive (+) lead from the battery to terminal 1 and negative (–) lead to terminal 2.

(2) Attach black colored tape to the forward sensor to prevent it from sensing.

(3) Light up the mirror with an electric light, and check that the mirror surface changes from ”bright” to ”dark”.

If the result is not as specified, replace the inner mirror assembly.

700HN–01

PRE–CHECK

1. SELECTING COMPASS DISPLAY MODE

(a) The compass switch allows you to select the Display or Non–display mode of the compass.

2. SETTING ZONE

(a) Deviation between the ”magnetic north” and ”actual north” differs depending on the location. Therefore, adjustment of the magnetism is required. Since the magnetic condition differs according to the area where the vehicle is used, it is necessary for each user to set the zone (Refer to ”Compass Zone Map”). The zone setting can be changed using the comp switch of the inner mirror.

3. PERFORMING CALIBRATION

(a) Because each vehicle has its own magnetic field, calibration should be performed for each vehicle. This compass function is used when storing the record of the vehicle’s magnetic field.

4. WHEN COMPASS MAGNETIZED:

(a) A compass could be magnetized during shipping by vessels or freight cars. Before delivery, therefore, make sure to perform calibration and ensure that calibration is done properly. If it cannot be done (cannot be complete in spite of driving around several times), it may be caused by magnetization. Demagnetize the vehicle using a demagnetizer and perform calibration again.

5. SETTING COMPASS

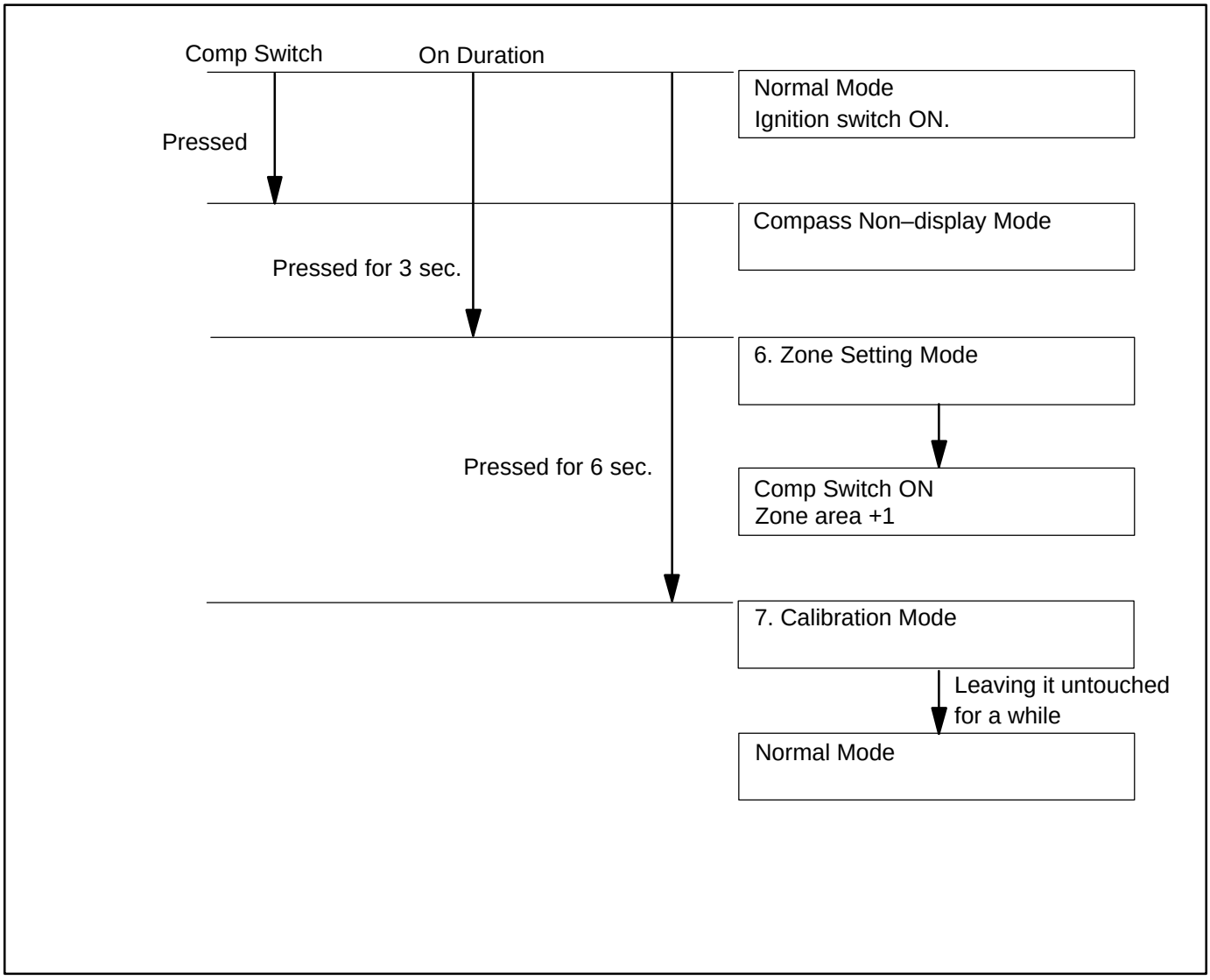

6. ZONE SETTING MODE

(a) Pressing the comp switch for 3 seconds, in the normal mode, will activate the zone setting mode. A number (1 – 15) is displayed on the compass display.

HINT:

In the initial state, ”8” is displayed.

(b) The displayed number increases +1 every time the comp switch is pressed. Referring to the map, check the number for the area where the vehicle will be used and set the zone number.

(c) Leave it untouched for several seconds after setting and check that the compass display shows an azimuthal direction (N, NE, E, SE, S, SW, W or NW) or ”C”.

7. CALIBRATION SETTING MODE

(a) Pressing the comp switch for 6 seconds, in the normal mode, will also activate this mode.

(b) Drive the vehicle at a slow speed of 8 km/h (5 mph) or less in the circular direction.

(c) Driving around the circle 1 to 3 times will display the azimuthal direction on the display, completing the calibration.

HINT:

Once calibration is complete, it is not necessary to perform the above procedures unless the magnetic field strength is drastically changed. If this happens, the azimuthal display will be changed to ”C”.

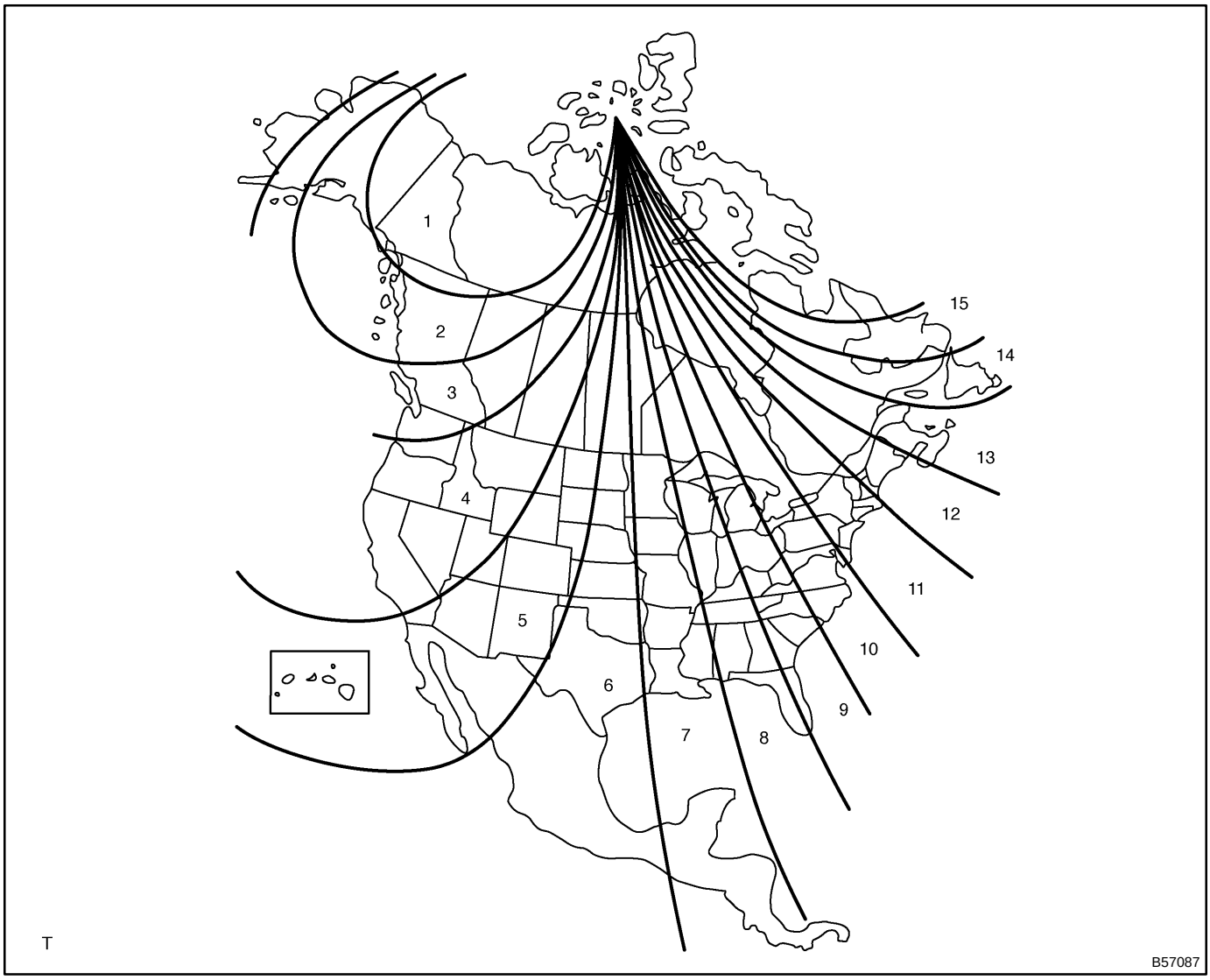

INNER REAR VIEW MIRROR ASSY

700HL–01

REPLACEMENT

HINT:
Installation is in the reverse order of the removal.

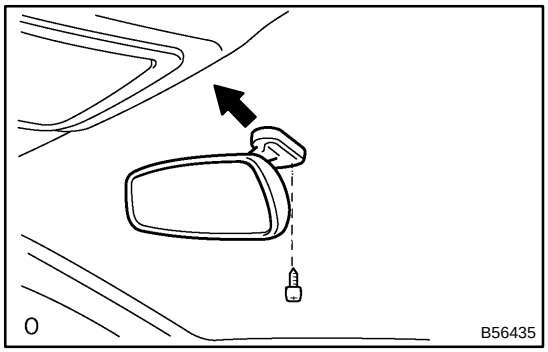

1. INNER REAR VIEW MIRROR ASSY

(a) Remove the screw.
(b) w/ Electric chromic mirror:
Disconnect the connector.
(c) Remove the rear view inner mirror assembly.

700H4–01

INSPECTION

1. POWER WINDOW SYSTEM CIRCUIT

System Drawing

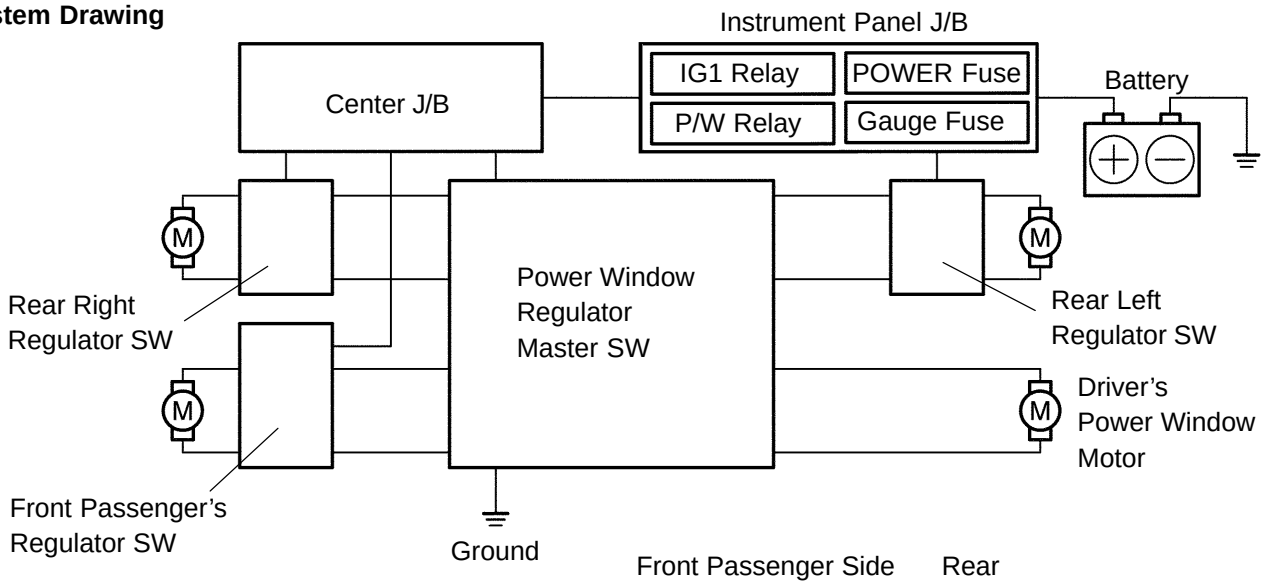

Power Window Regulator Master SW Connector (Wire Harness Side)

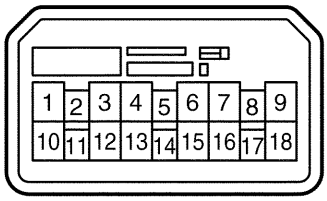

Front Passenger Side Power Window Regulator SW Connector (Wire Harness Side)

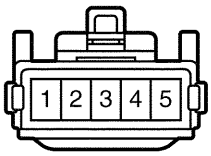

Rear Power Window Regulator SW Connector (Wire Harness Side)

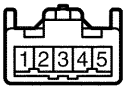

Switch Inner Circuit

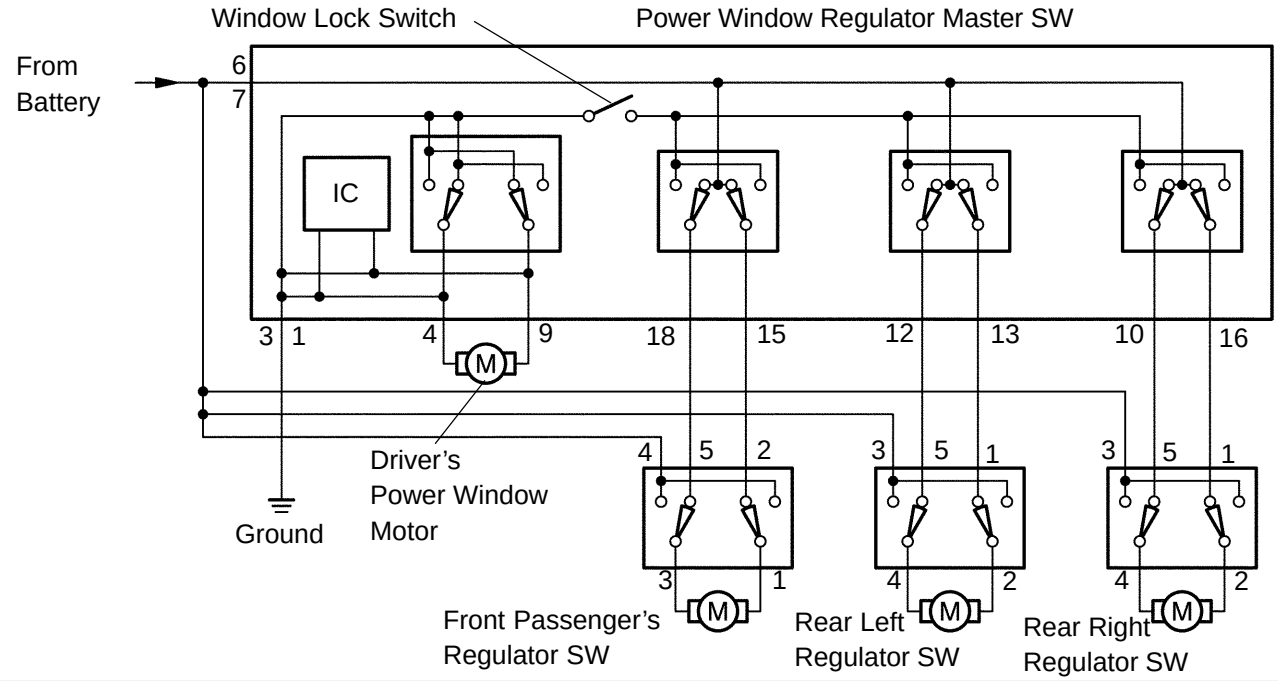

P B59258

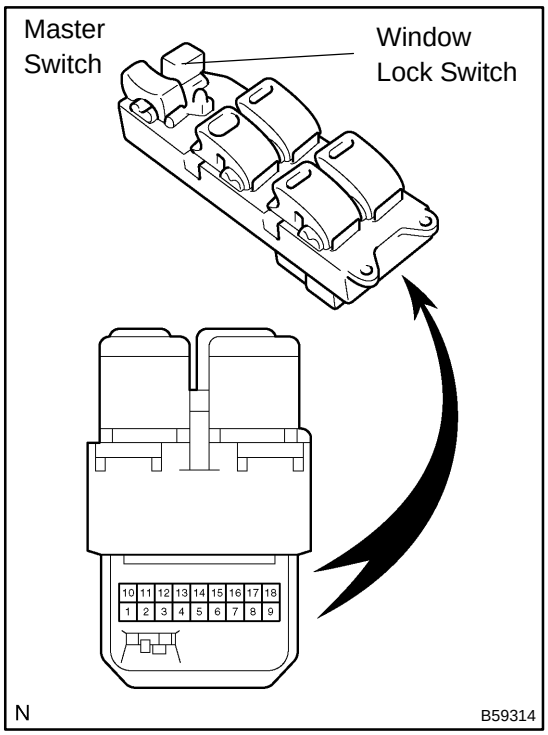

2. INSPECT POWER WINDOW REGULATOR MASTER SWITCH ASSY

(a) Inspect the master switch continuity.

[Driver's switch (Window unlock and lock)]

Standard:

Switch position	Symbols (Terminal No.)	Specified condition
UP	DU (4) ⇔ B (6) ⇔ B (7)	Continuity
	E (1) ⇔ E (3) ⇔ DD (9)	
OFF	E (1) ⇔ E (3) ⇔ DU (4)	Continuity
	E (1) ⇔ E (3) ⇔ DD (9)	
DOWN	E (1) ⇔ E (3) ⇔ DU (4)	Continuity
	B (6) ⇔ B (7) ⇔ DD (9)	
DOWN AUTO	E (1) ⇔ E (3) ⇔ DU (4)	Continuity
	B (6) ⇔ B (7) ⇔ DD (9)	

[Front passenger's switch (Window unlock)]

Standard:

Switch position	Symbols (Terminal No.)	Specified condition
UP	E (1) ⇔ E (3) ⇔ PD (15)	Continuity
	B (6) ⇔ B (7) ⇔ PU (18)	
OFF	E (1) ⇔ E (3) ⇔ PD (15)	Continuity
	E (1) ⇔ E (3) ⇔ PU (18)	
DOWN	E (1) ⇔ E (3) ⇔ PU (18)	Continuity
	B (6) ⇔ B (7) ⇔ PD (15)	

[Front passenger's switch (Window lock)]

Standard:

Switch position	Symbols (Terminal No.)	Specified condition
UP	B (6) ⇔ B (7) ⇔ PU (18)	Continuity
OFF	PD (15) ⇔ PU (18)	Continuity
DOWN	B (6) ⇔ B (7) ⇔ PD (15)	Continuity

[Rear left switch (Window unlock)]

Standard:

Switch position	Symbols (Terminal No.)	Specified condition
UP	E (1) ⇔ E (3) ⇔ RLD (13)	Continuity
	B (6) ⇔ B (7) ⇔ RLU (12)	
OFF	E (1) ⇔ E (3) ⇔ RLD (13)	Continuity
	E (1) ⇔ E (3) ⇔ RLU (12)	
DOWN	E (1) ⇔ E (3) ⇔ RLU (12)	Continuity
	B (6) ⇔ B (7) ⇔ RLD (13)	

[Rear left switch (Window lock)]

Standard:

Switch position	Symbols (Terminal No.)	Specified condition
UP	B (6) ⇔ B (7) ⇔ RLU (12)	Continuity
OFF	RLU (12) ⇔ RLD (13)	Continuity
DOWN	B (6) ⇔ B (7) ⇔ RLD (13)	Continuity

[Rear right switch (Window unlock)]
Standard:

Switch position	Symbols (Terminal No.)	Specified condition
UP	B (6) ⇔ B (7) ⇔ RRU (10)	Continuity
	E (1) ⇔ E (3) ⇔ RRD (16)	
OFF	E (1) ⇔ E (3) ⇔ RRU (10)	Continuity
	E (1) ⇔ E (3) ⇔ RRD (16)	
DOWN	E (1) ⇔ E (3) ⇔ RRU (10)	Continuity
	B (6) ⇔ B (7) ⇔ RRD (16)	

[Rear right switch (Window lock)]
Standard:

Switch position	Symbols (Terminal No.)	Specified condition
UP	B (6) ⇔ B (7) ⇔ RRU (10)	Continuity
OFF	RRU (10) ⇔ RRD (16)	Continuity
DOWN	B (6) ⇔ B (7) ⇔ RRD (16)	Continuity

If the result is not as specified, replace the master switch.

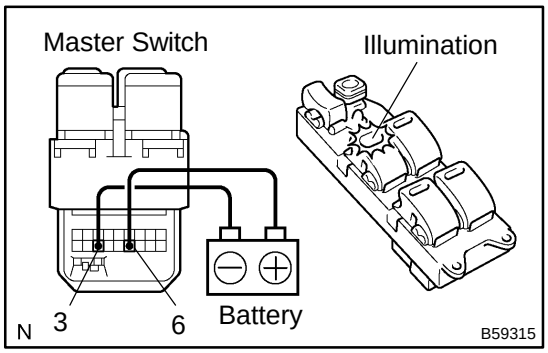

(b) Inspect the master switch illumination.
Standard:

Measuring condition	Specified condition
Battery positive (+) Terminal – 6 Battery negative (–) Terminal – 3	Switch illumination lights up

If the result is not as specified, replace the master switch.

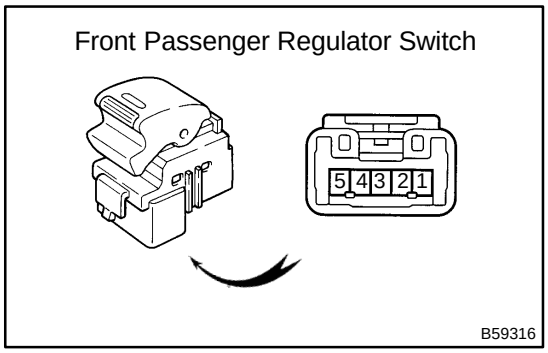

3. INSPECT POWER WINDOW REGULATOR SWITCH ASSY

(a) Inspect the front passenger's regulator switch continuity.
Standard:

Switch position	Symbols (Terminal No.)	Specified condition
UP	D (1) ⇔ SD (2)	Continuity
	U (3) ⇔ B (4)	
OFF	D (1) ⇔ SD (2)	Continuity
	U (3) ⇔ SU (5)	
DOWN	D (1) ⇔ B (4)	Continuity
	U (3) ⇔ SU (5)	

If the result is not as specified, replace the regulator switch.

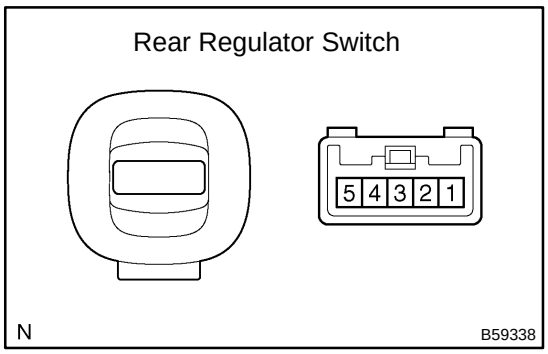

4. INSPECT POWER WINDOW REGULATOR SWITCH ASSY REAR

(a) Inspect the rear regulator switch continuity.

Standard:

Switch position	Symbols (Terminal No.)	Specified condition
UP	SD (1) ⇔ D (2)	Continuity
	B (3) ⇔ U (4)	
OFF	SD (1) ⇔ D (2)	Continuity
	U (4) ⇔ SU (5)	
DOWN	D (2) ⇔ B (3)	Continuity
	U (4) ⇔ SU (5)	

If the result is not as specified, replace the regulator switch.

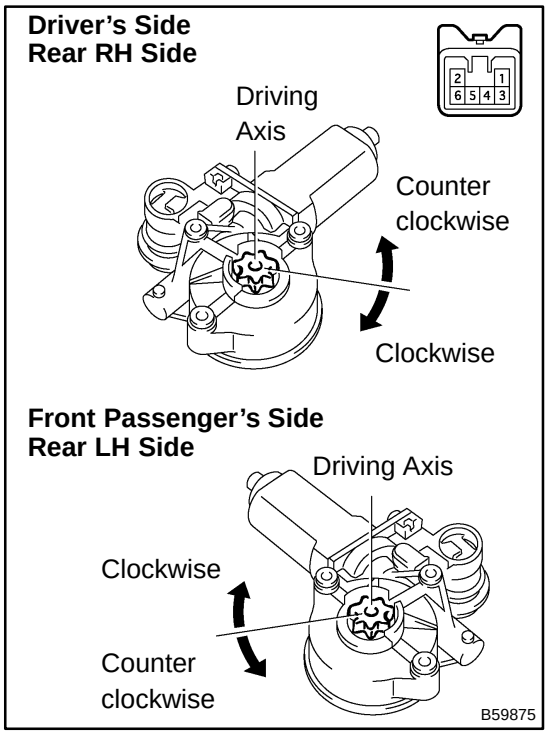

5. INSPECT POWER WINDOW REGULATOR MOTOR

(a) Inspect the regulator motor operation.

HINT:

- Driver's side and rear RH regulator motors should be inspected in the same procedure.
- Passenger's side and rear LH regulator motors should be inspected in the same procedure.

(1) Check that the motor operates smoothly when the battery positive voltage is applied to each terminal of the connector.

Standard [Driver's side and rear RH side]:

Measuring condition	Operational direction
Battery positive (+) Terminal – 4 Battery negative (–) Terminal – 5	Clockwise toward driving axis
Battery positive (+) Terminal – 5 Battery negative (–) Terminal – 4	Counterclockwise toward driving axis

Standard [Front passenger's side and rear LH side]:

Measuring condition	Operational direction
Battery positive (+) Terminal – 5 Battery negative (–) Terminal – 4	Clockwise toward driving axis
Battery positive (+) Terminal – 4 Battery negative (–) Terminal – 5	Counterclockwise toward driving axis

If the result is not as specified, replace the motor.

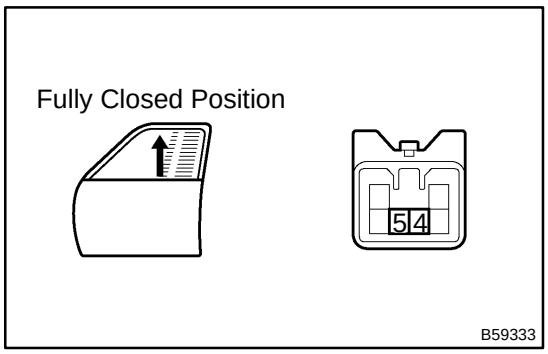

(b) Inspect the PTC operation inside the regulator motor.

NOTICE:

The inspection should be performed with the power window regulator and door glass installed to the vehicle.

(1) Set a DC 400 A probe of the TOYOTA electrical tester in the wire harness of terminal 4 or 5.

NOTICE:

Match the arrow mark of the probe with the current direction.

(2) Set the door glass in the fully closed position.

(3) When 60 seconds have elapsed after the door glass is fully closed, check how long it takes for the current to change from approximately 16 – 34 A into 1 A or less when the power window switch is turned UP once again.

Standard: Approximately 4 – 90 seconds

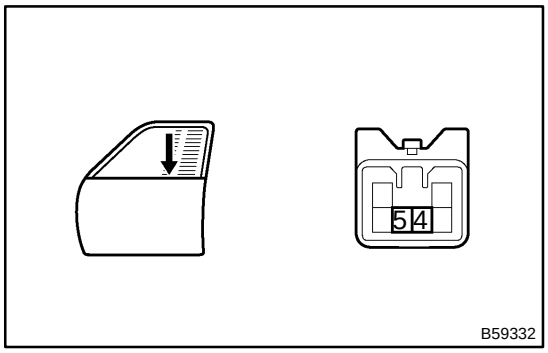

(4) When approximately 60 seconds have elapsed after the inspection of the current cut–off, check that the door glass goes down when the power window regulator switch is turned DOWN.

If the result is not as specified, replace the motor.

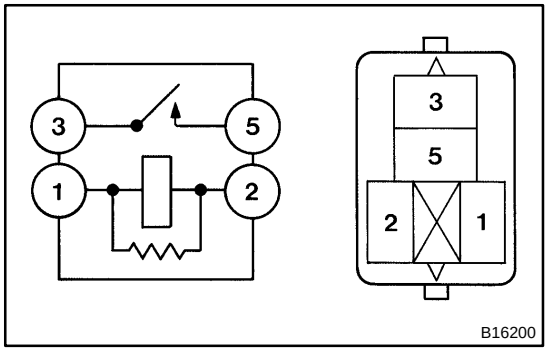

6. INSPECT RELAY (Making: P/W)

(a) Remove the power window relay from the instrument panel J/B.

(b) Inspect the power window relay.

Standard:

Teminal No.	Condition	Specified condition
1 ⇔ 2	Constant	Continuity
3 ⇔ 5	Apply B+ between Terminals 1 and 2	Continuity

If the resut is not as specified, replace the relay.

700H2–01

ON–VEHICLE INSPECTION

1. CHECK BASIC FUNCTION (MANUAL OPERATION FUNCTION)

(a) Turn the ignition switch ON.

(1) Check that the door glass moves up when each window switch of the regulator master switch assembly is turned UP and moves down when each window switch is turned DOWN.

(2) Check that the door glass moves up when the window switch of each regulator switch assembly is turned UP and moves down when the window switch is turned DOWN.

(3) Check that the other door glasses than the driver's door glass do not operate when the window lock switch is turned LOCK.

2. CHECK AUTOMATIC OPERATION FUNCTION

(a) Turn the ignition switch ON.

(1) Check that the AUTO DOWN operates and the door glass is fully opened when each window switch of the regulator master switch assembly is turned DOWN by double–shift.

(2) Check that the AUTO DOWN operates and the door glass is fully opened when the window switch of each regulator switch assembly is turned DOWN by double–shift.

(3) Check that the door glass stops when the applicable switch is turned UP during the AUTO DOWN operation. (However, if the switch is kept in the UP side, the window will transfer to the manual operation.)

POWER WINDOW CONTROL SYSTEM

700H1–01

LOCATION

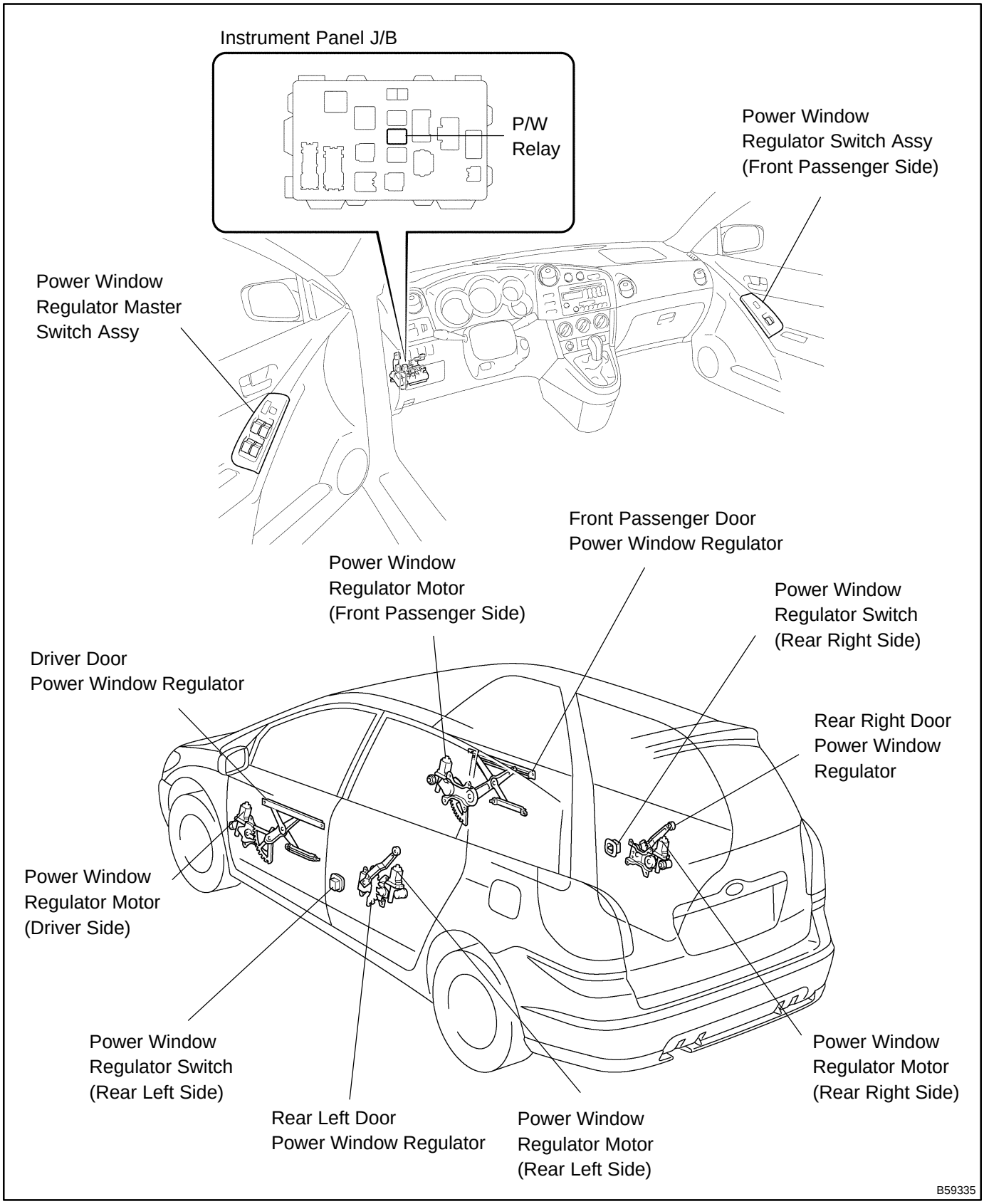

700H3–01

PROBLEM SYMPTOMS TABLE

Symptom	Suspected Area	See page
Power window does not operate (ALL) (Power door lock does not operate)	7. P/W relay 8. POWER fuse 9. AM1 fuse 10. GAUGE fuse 11. Wire harness	70–4 68–1 68–1 68–1 –
Power window does not operate (ALL) (Power door lock is normal)	1. Ignition switch 2. Power window regulator master switch 3. Wire harness 4. Power window motor	80–2 70–4 – 70–4
”One–Touch Power Window System” does not operate	1. Power window regulator master switch 2. Power window motor	70–4 70–4
Only one window glass does not move	1. Power window regulator master switch 2. Power window regulator switch 3. Power window motor 4. Wire harness	70–4 70–4 70–4 –
”Window Lock System” does not operate	1. Power window regulator master switch	70–4

OUTER REAR VIEW MIRROR ASSY LH

700HO–01

REPLACEMENT

HINT:

- Installation is in the reverse order of the removal.
- In the RH side, work in the same procedure as in the LH side.

1. REMOVE FRONT DOOR PULL HANDLE LH (See page 75–5)

2. REMOVE POWER WINDOW REGULATOR MASTER SWITCH ASSY (W/ POWER WINDOW) (See page 75–5)

3. REMOVE FRONT ARMREST BASE PANEL UPPER LH (W/O POWER WINDOW) (See page 75–5)

4. REMOVE FRONT DOOR WINDOW REGULATOR HANDLE ASSY (W/O POWER WINDOW) (See page 75–5)

5. REMOVE FRONT DOOR LOWER FRAME BRACKET GARNISH LH (See page 75–5)

6. REMOVE FRONT DOOR TRIM BOARD SUB–ASSY LH (See page 75–5)

7. REMOVE OUTER REAR VIEW MIRROR ASSY LH

(a) Remove the 3 nuts and the rear view mirror assembly LH, and then disconnect the connector.

8. INSTALL OUTER REAR VIEW MIRROR ASSY LH

Torque: 8.0 N·m (81 kgf·cm, 71 in.·lbf)

700HQ–01

DISPOSAL

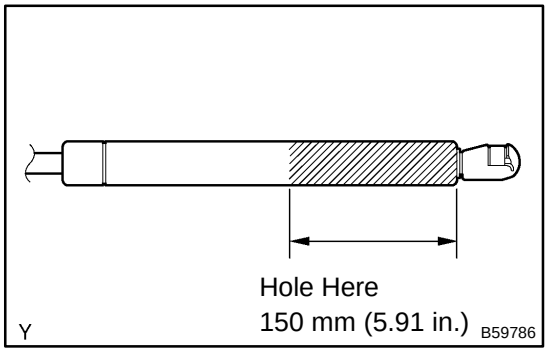

1. DISPOSE BACK WINDOW STAY ASSY LH

(a) Fix the back door stay, with the piston–rod pulled out, on a vise.

NOTICE:

When handling the back door stay:

- **Do not disassemble the back door stay because the cylinder is filled with pressurized gas.**
- **If the back door stay is to be replaced, drill a 2.0 – 3.0 mm (0.079 – 0.118 in.) hole in the lower half of the bottom of the back door stay, as shown in the illustration, to completely release the high–pressure gas before disposing of it.**
- **When drilling, chips may fly off, so work carefully.**
- **The gas is colorless, odorless and non–toxic.**
- **When working, handle the back door stay carefully. Never scratch the exposed part of the piston rod, and never allow paint or oil to get on it.**
- **Do not turn the piston rod and cylinder with the back door stay fully extended.**

BACK WINDOW STAY ASSY LH

700HP–01

REPLACEMENT

HINT:

- Installation is in the reverse order of the removal.
- In the RH side, work in the same procedure as in the LH side.

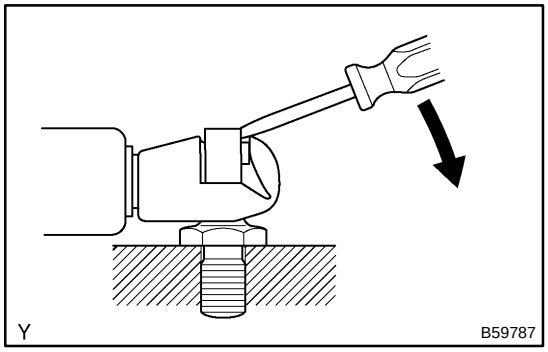

1. REMOVE BACK WINDOW STAY ASSY LH

(a) Using a screwdriver, remove the back door stay from the back door panel.

(b) Remove the 2 bolts and back door stay from the body.

HINT:

While supporting the back door by hand, remove the back door stay.

INSTRUMENT PANEL/METER

COMPONENTS

7108Q–01

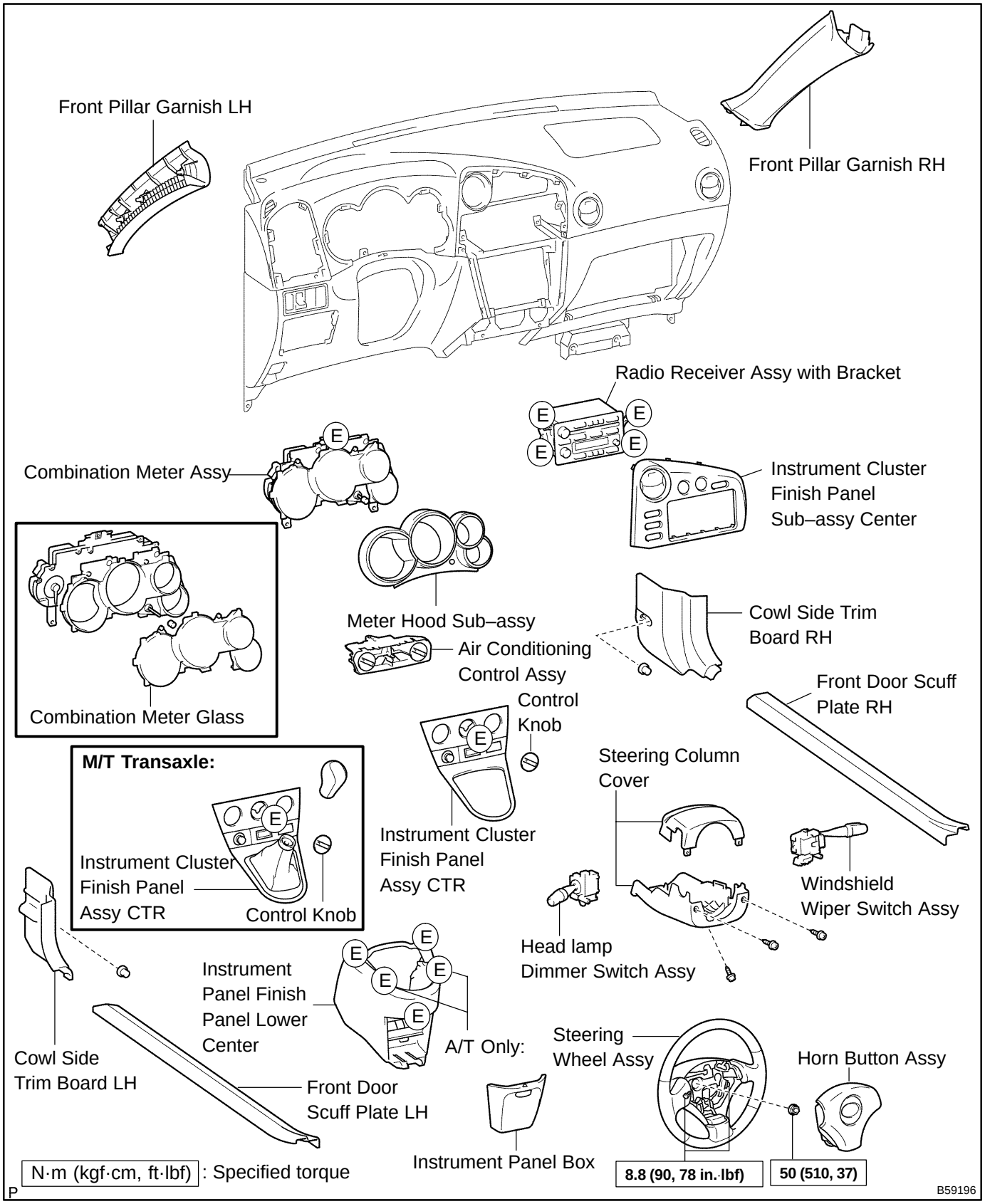

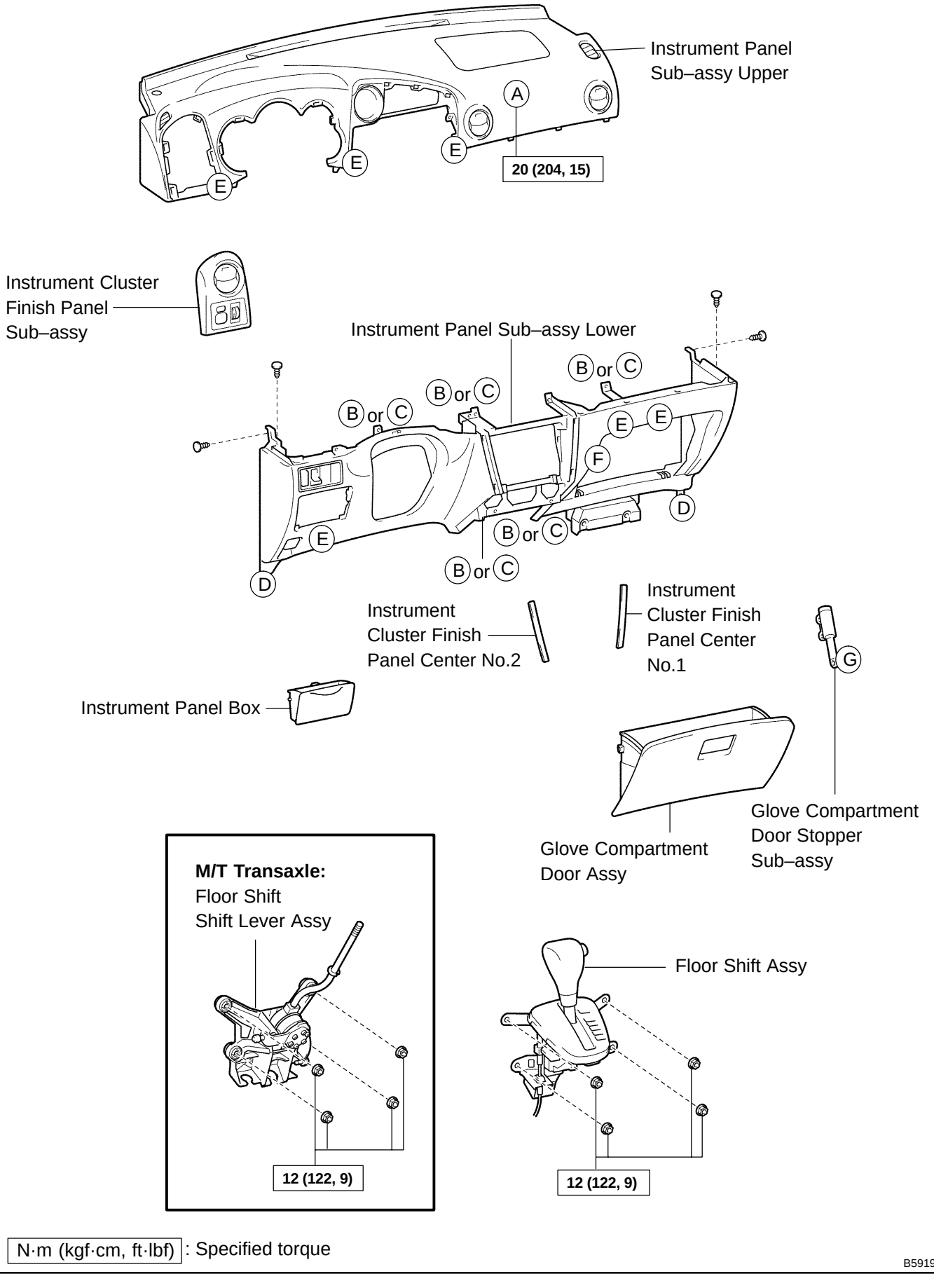
Instrument Panel Sub–assy Upper
A
E
E
E
20 (204, 15)
Instrument Cluster Finish Panel Sub–assy
Instrument Panel Sub–assy Lower
B or C
B or C
B or C
B or C
B or C
E
E
E
F
D
D
Instrument Cluster Finish Panel Center No.2
Instrument Cluster Finish Panel Center No.1
G
Instrument Panel Box
Glove Compartment Door Assy
Glove Compartment Door Stopper Sub–assy
M/T Transaxle:
Floor Shift
Shift Lever Assy
12 (122, 9)
Floor Shift Assy
12 (122, 9)
N·m (kgf·cm, ft·lbf) : Specified torque
P
B59197

INSTRUMENT PANEL SUB–ASSY LOWER

7108R–01

PRECAUTION

1. PRECAUTION FOR VEHICLE WITH SRS AIRBAG AND SEAT BELT PRETENSIONER

(a) Some operations in this section may affect the SRS airbag. Before performing the corresponding operations, please read the NOTICE of the SRS airbag to perform the proper operations.

7108S–01

REPLACEMENT

HINT:

COMPONENTS: See page 71–7

1. TABLE OF BOLT, SCREW AND NUT

HINT:

Indicate the bolts, screws and nuts, which are necessary for installation and removal of the instrument panel, in the illustration and the text with alphabets.

mm (in.) (L = Length)

Code	Shape		Code	Shape		Code	Shape	
(A)	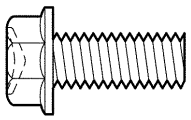 B50533	ϕ = 8 (0.31) L = 18 (0.71) 91626-60818	(B)	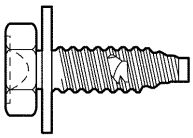 B52928	ϕ = 6 (0.24) L = 20 (0.79) 90159-60546	(C)	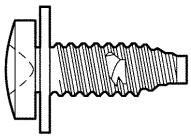 B52927	ϕ = 7 (0.28) L = 20 (0.79) 90159-70004
(D)	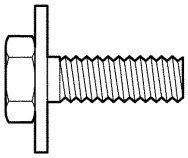 B31939	ϕ = 6 (0.24) L = 16 (0.63) 91635-60616	(E)	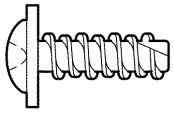 B32741	ϕ = 5 (0.20) L = 14 (0.55) 93568-55014	(F)	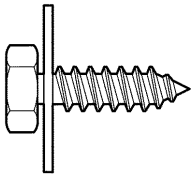 B52926	ϕ = 6 (0.24) L = 20 (0.79) 90159-60125
(G)	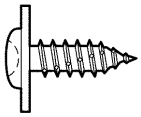 B59217	ϕ = 5 (0.20) L = 14 (0.55) 90167-50022						

P B59218

2. DISCONNECT BATTERY NEGATIVE TERMINAL(See page 60–1)

3. INSPECT CENTER FRONT WHEEL

4. REMOVE HORN BUTTON ASSY(See page 60–13)

5. REMOVE STEERING WHEEL ASSY(See page 50–8)

SST 09950–50013 (09951–05010, 09952–05010, 09953–05020, 09954–05021)

6. REMOVE STEERING COLUMN COVER(See page 50–8)

7. REMOVE HEADLAMP DIMMER SWITCH ASSY(See page 65–21)

8. REMOVE WINDSHIELD WIPER SWITCH ASSY(See page 66–17)

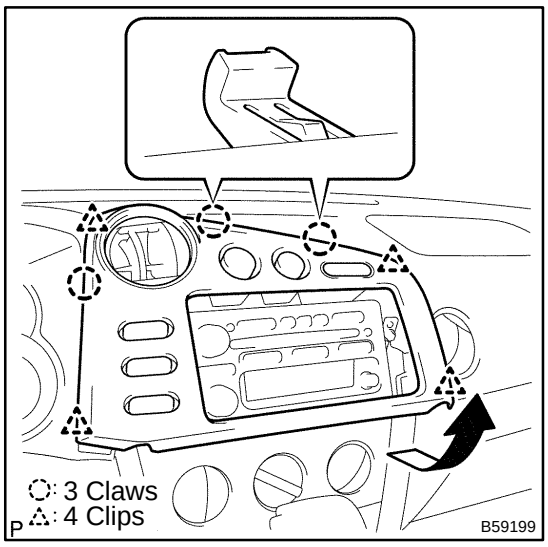

9. REMOVE INSTRUMENT CLUSTER FINISH PANEL SUB–ASSY CENTER

(a) Using a moulding remover, disengage the 4 clips and 3 claws.

(b) Disconnect connector, then remove the instrument cluster finish panel sub–assy center.

10. REMOVE RADIO RECEIVER ASSEMBLY W/BRACKET (W/O NAVIGATION SYSTEM) (See page 67–5)

11. REMOVE NAVIGATION RECEIVER ASSEMBLY W/BRACKET (W/ NAVIGATION SYSTEM) (See page 67–7)

12. REMOVE FLOOR SHIFT SHIFT LEVER KNOB SUB–ASSY (M/T TRANSAXLE)

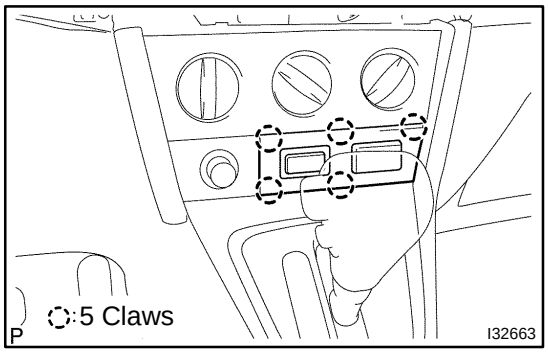

13. REMOVE INSTRUMENT CLUSTER FINISH PANEL ASSY CTR

(a) Power point socket models only:
Disengage the 5 claws and remove the switch base.

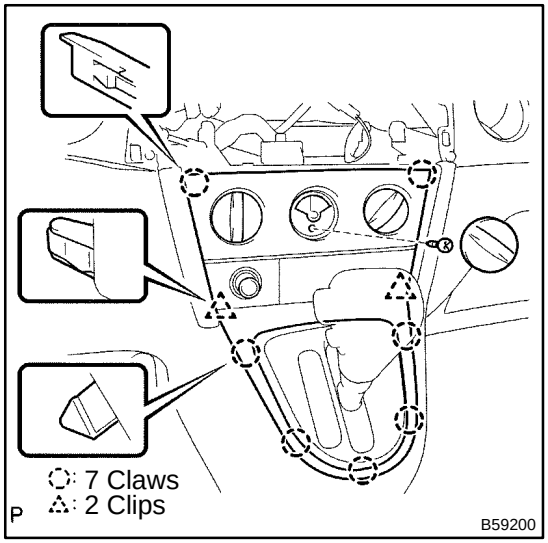

(b) Remove the control knob.

(c) Remove the screw (E).

(d) Using a moulding remover, disengage the 2 clips and 7 claws, then pull out the instrument cluster center panel.

(e) Disconnect the connectors.

14. REMOVE AIR CONDITIONING CONTROL ASSY(See page 55–13)

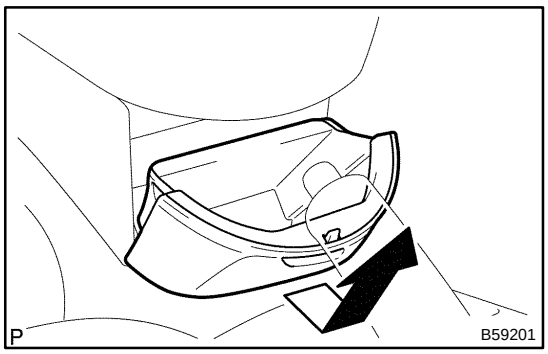

15. REMOVE INSTRUMENT PANEL BOX

(a) Open the instrument panel box.

(b) Pull the instrument panel box upward to remove it.

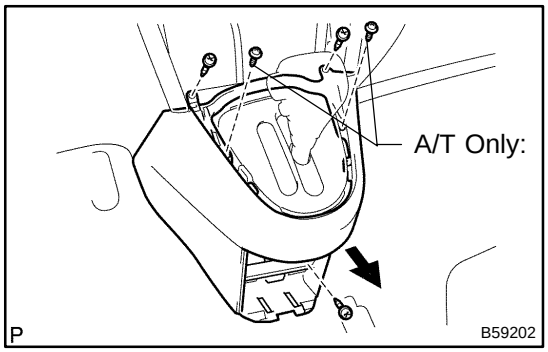

16. REMOVE INSTRUMENT PANEL FINISH PANEL LOWER CENTER

(a) M/T Transaxle:
Remove the 3 screws (E).

(b) A/T Transaxle:
Remove the 5 screws (E).

(c) Using a screwdriver, disengage the claws, then remove the instrument panel finish lower center.

HINT:
Tape the screwdriver tip before use.

17. SEPARATE FLOOR SHIFT ASSY (A/T TRANSAXLE)(See page 40–90)

18. SEPARATE FLOOR SHIFT SHIFT LEVER ASSY (M/T TRANSAXLE)(See page 41–6)

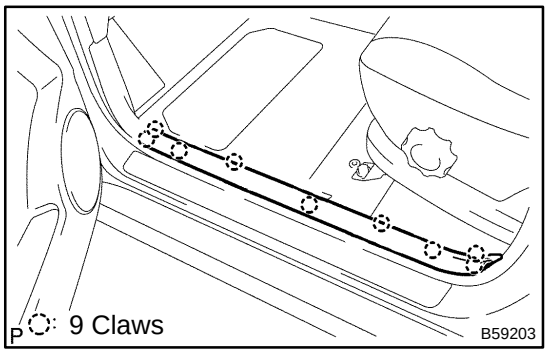

19. REMOVE FRONT DOOR SCUFF PLATE LH

(a) Disengage the 9 claws, then remove the front door scuff plate LH.

20. REMOVE FRONT DOOR SCUFF PLATE RH

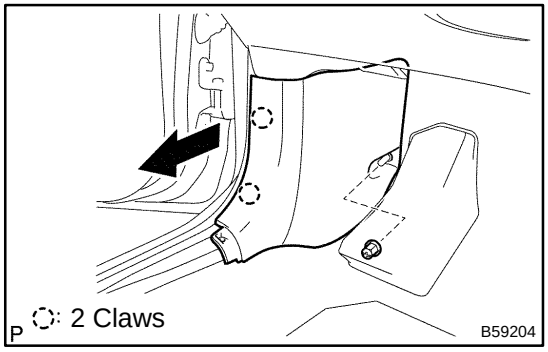

21. REMOVE COWL SIDE TRIM BOARD LH

(a) Remove the cowl side trim clip.

(b) Disengage the 2 claws, then remove the cowl side trim board LH.

22. REMOVE COWL SIDE TRIM BOARD RH

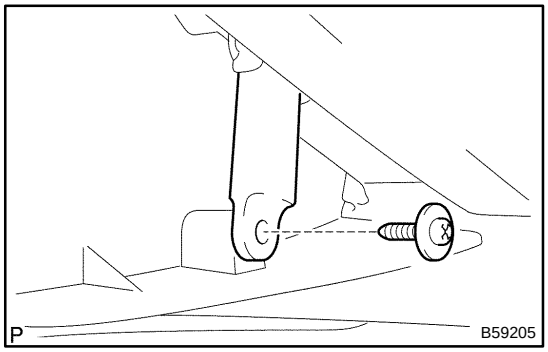

23. REMOVE GLOVE COMPARTMENT DOOR STOPPER SUB–ASSY

(a) Open the glove compartment door.

(b) Remove the screw (G) and glove compartment door stopper sub–assy.

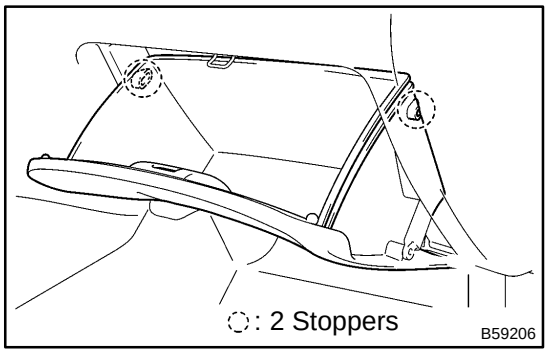

24. REMOVE GLOVE COMPARTMENT DOOR ASSY

(a) Deform the upper part of the glove compartment door assy to release the stoppers.

(b) Pull the glove compartment door assy upward to remove it.

25. DISCONNECT PASSENGER AIRBAG CONNECTOR(See page 60–25)

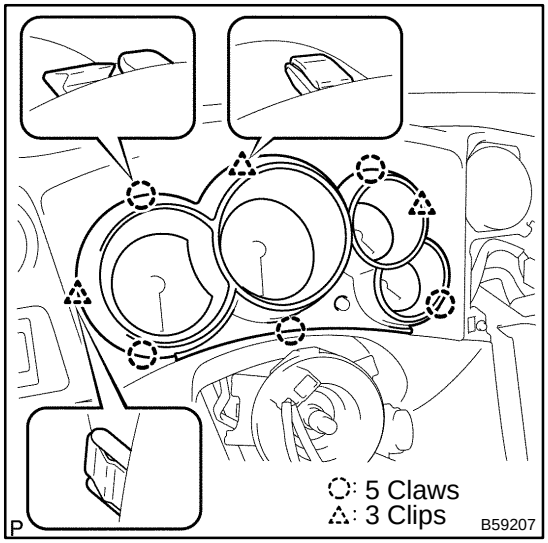

26. REMOVE METER HOOD SUB–ASSY

(a) Using a moulding remover, disengage the 5 claws and 3 clips, then remove the meter hood sub–assy.

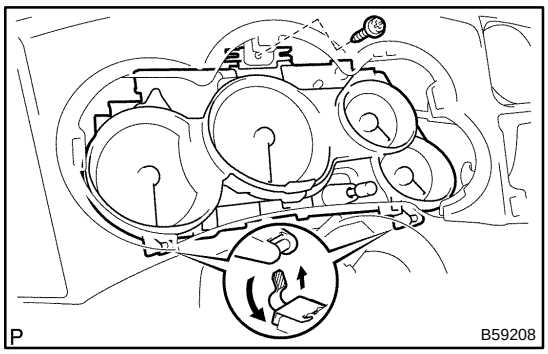

27. REMOVE COMBINATION METER ASSY

(a) Remove the screw (E).

(b) Disengage the 2 claws as shown in the illustration.

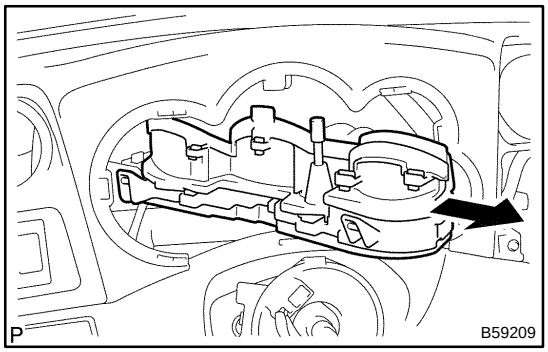

(c) Disconnect connector, then remove the combination meter assy, as shown in the illustration.

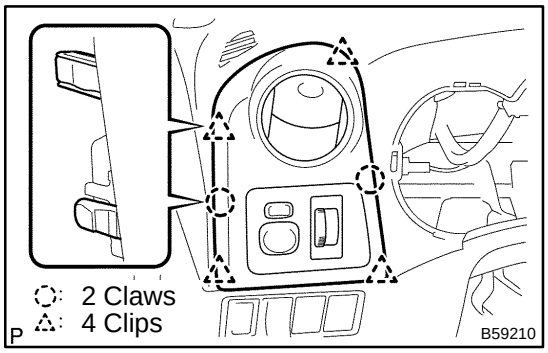

28. REMOVE INSTRUMENT CLUSTER FINISH PANEL SUB–ASSY

(a) Using a moulding remover, disengage the 4 clips and 2 claws.

(b) Pull out the instrument cluster finish panel sub–assy.

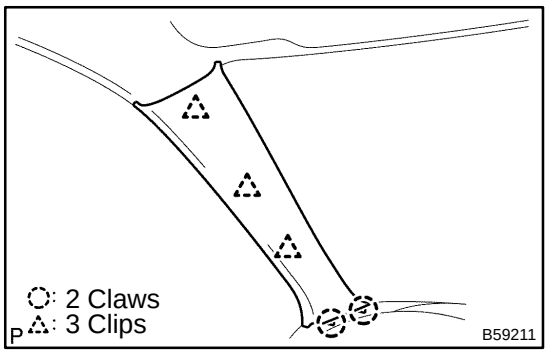

29. REMOVE FRONT PILLAR GARNISH LH

(a) Disengage the 3 clips and 2 claws, then remove the front pillar garnish LH.

30. REMOVE FRONT PILLAR GARNISH RH

31. REMOVE INSTRUMENT PANEL SUB–ASSY UPPER

(a) Remove the 3 screws (E) and bolt (A).
(b) Disengage the 3 clips and 4 claws.
(c) Pull the instrument panel sub–assy upper rearward to remove it.
(d) Disconnect the connectors.

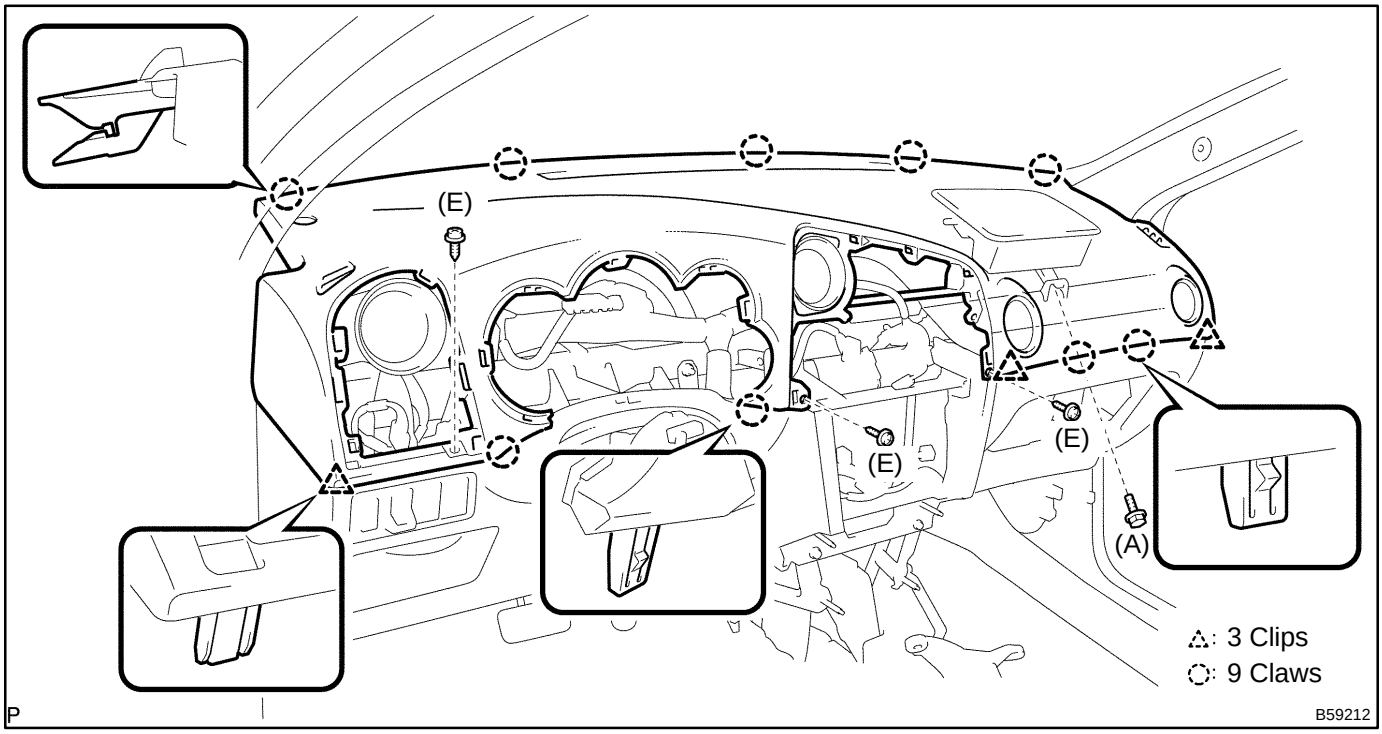

32. REMOVE INSTRUMENT PANEL SUB–ASSY LOWER

(a) Disconnect the hood lock control cable and DLC3 connector.
(b) Using a clipremover, remove the 4 clips.
(c) Remove the 8 bolts and 4 screws.
(d) Disengage the wire harness 4 clamps.
(e) Remove the instrument panel sub–assy lower.

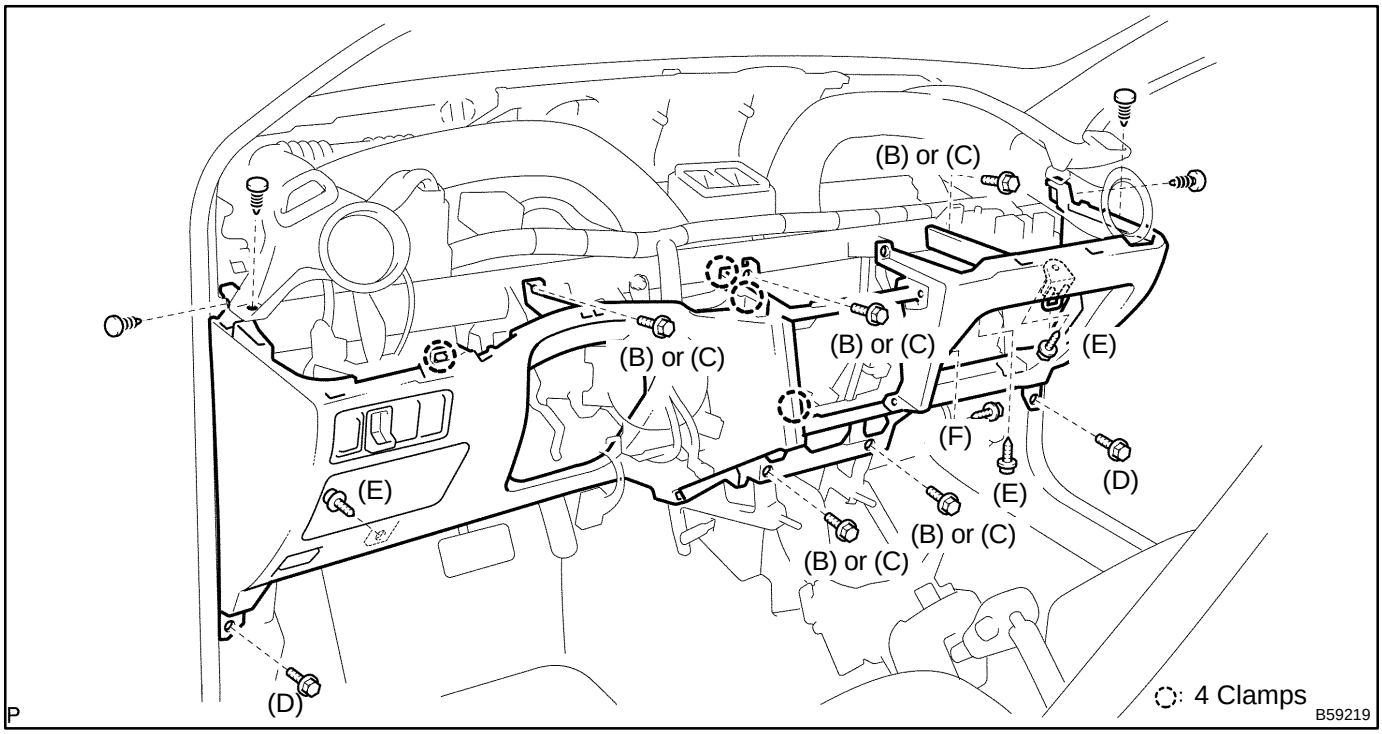

33. REMOVE INSTRUMENT CLUSTER FINISH PANEL CENTER NO.2

(a) Using a moulding remover, disengage the 2 claws.
(b) Pull out the instrument cluster finish panel center No.2.

34. REMOVE INSTRUMENT CLUSTER FINISH PANEL CENTER NO.1

35. REMOVE INSTRUMENT PANEL BOX

36. INSTALL INSTRUMENT PANEL SUB–ASSY UPPER

(a) Install the instrument panel sub–assy upper, 3 screws (E) with bolt (A).

Torque:
Bolt : 20 N·m (204 kgf·cm, 15 ft·)

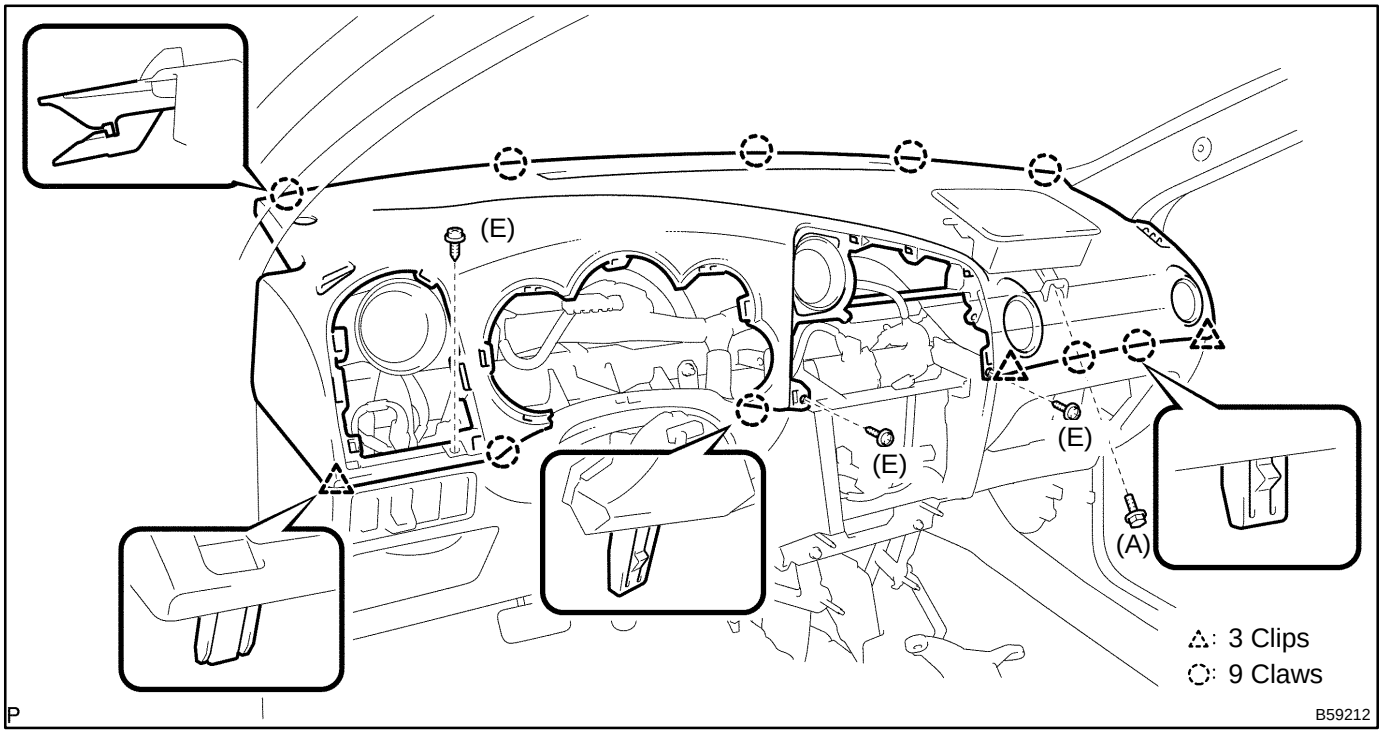

37. CENTER SPIRAL CABLE(See page 60–22)
38. INSTALL STEERING WHEEL ASSY(See page 50–8)
39. INSPECT STEERING WHEEL CENTER POINT
40. INSPECT HORN BUTTON ASSY(See page 60–8)
41. INSTALL HORN BUTTON ASSY(See page 60–13)
42. INSPECT SRS WARNING LIGHT(See page 05–543)

COMBINATION METER ASSY

7108T–01

OVERHAUL

1. REMOVE METER HOOD SUB–ASSY(See page 71–10)

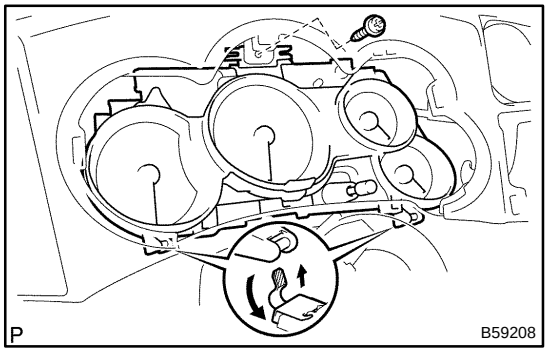

2. REMOVE COMBINATION METER ASSY

(a) Remove the screw.

(b) Disengage the 2 claws as shown in the illustration.

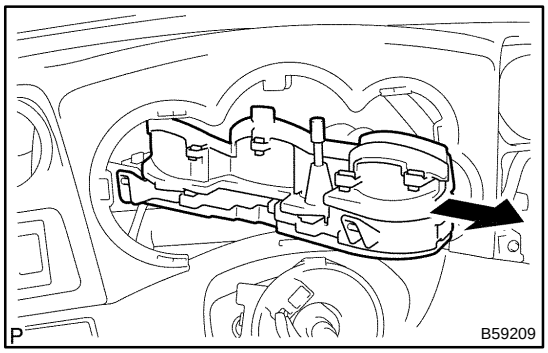

(c) Disconnect connector, then remove the combination meter assy, as shown in the illustration.

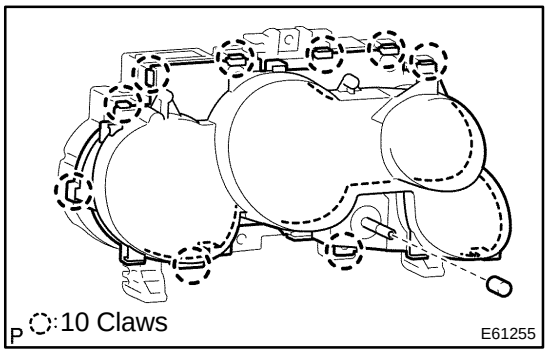

3. REMOVE COMBINATION METER GLASS

(a) Remove the trip knob.

(b) Disengage the 10 claws and remove the window plate.

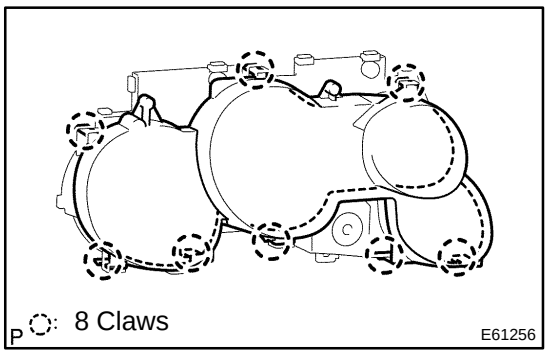

(c) Disengage the 8 claws and remove the combination meter glass.

7108V–01

ON–VEHICLE INSPECTION

1. INSPECT SPEEDOMETER

(a) Check the operation.

(1) Using a speedometer tester, inspect the speedometer fro allowable indication error and check the operation of the odometer.

Reference:

USA (mph)		CANADA (km/h)	
Standard indication	Allowable range	Standard indication	Allowable range
20	19 – 22	20	18 – 23
40	39 – 42.5	40	40 – 44
60	59 – 63	60	60 – 64.5
80	79 – 83.5	80	80 – 85
100	99 – 104	100	100 – 105
120	119 – 124.5	120	120 – 125.5
140	139 – 145	140	140 – 146
–	–	160	160 – 167
–	–	180	180 – 188
–	–	200	200 – 209
–	–	220	220 – 230

NOTICE:

Tire wear and tire over or under inflation will increase the indication error.

(2) Check the deflection width of the speed meter indicator.

Reference: Below 0.5 km/h / 0.3 mph

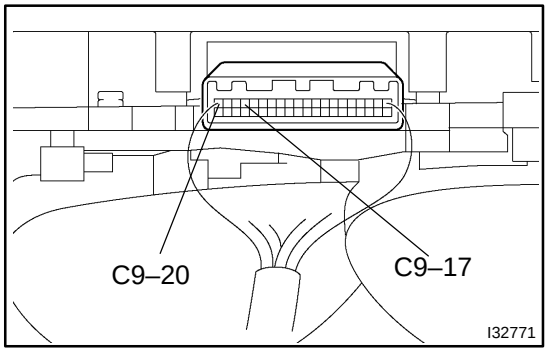

2. INSPECT OUTPUT SIGNAL OF VEHICLE SPEED

(a) Check for standard signal.

(1) While driving the vehicle at the speed of 10 km/h, check the voltage between the terminals C9–17 and C9–20 of the combination meter assy.

Standard: Fluctuation between 10 to 14 V or less is repeated 7 times within 1 sec.

NOTICE:

Check it with the ignition switch ON and the connector connected.

3. INSPECT TACHOMETER

(a) Check the operation

(1) Connect a tune–up test tachometer, and start the engine.

NOTICE:

- **Reversing the connection of the tachometer will damage the transistors and diodes inside.**
- **When removing or installing the tachometer, be careful not to drop or subject it to heavy shocks.**

(2) Compare the test and tachometer indications.

DC 13.5 V, 25 °C at (77 °F)

Standard indication (r/min)	Allowable range (r/min) Data in ( ) are for reference
700	630 – 770
1,000	(900 – 1,100)
2,000	(1,850 – 2,150)
3,000	2,800 – 3,200
4,000	(3,800 – 4,200)
5,000	4,800 – 5,200
6,000	(5,750 – 6,250)
7,000	6,700 – 7,300
8,000	7,700 – 8,300

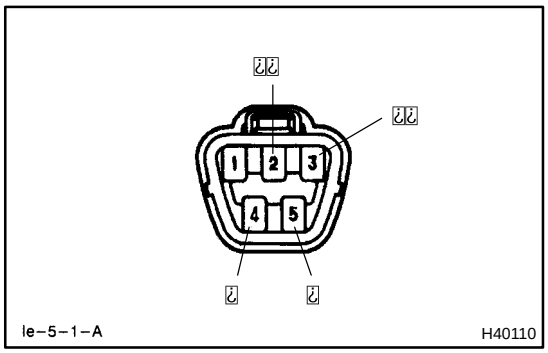

4. INSPECT FUEL RECEIVER GAUGE

(a) Inspect the circuit.

(1) Disconnect the connector from the sender gauge.

(2) Turn the ignition switch ON, then check the position of the receiver gauge needle.

Needle position: EMPTY

(3) Connect terminals 2 and 3 on the wire harness side connector and Turn the ignition switch ON, then check the position of the receiver gauge needle.

Needle position: FULL

5. INSPECT FUEL LEVEL WARNING

(a) Inspect the circuit.

(1) Disconnect the connector from the sender gauge.

(2) Turn the ignition switch ON, check the fuel level needle indicates EMPTY and fuel level warning lights light on.

6. INSPECT WATER TEMPERATURE RECEIVER GAUGE WARNING LIGHT

(a) Inspect the circuit.

(1) Disconnect the connector from the sender gauge.

(2) Turn the ignition switch ON, check the position of the water temperature receiver gauge needle.

Needle position: COOL

(3) Connect between terminals on the wire harness side connector, then check the position of the water temperature receiver gauge needle.

Needle position: HOT

7. INSPECT LOW OIL PRESSURE WARNING LIGHT

(a) Inspect the circuit.
   (1) Disconnect the connector from the low oil pressure switch.
   (2) Turn the ignition switch ON.
   (3) Connect the terminal of wire harness side connector and ground, then check the warning low oil pressure warning light.

   Low oil pressure warning light: Light on

8. INSPECT LOW OIL PRESSURE SWITCH

(a) Check the continuity.
   (1) Disconnect the connector from the low oil pressure switch.
   (2) Check that continuity exists between terminal and ground.

   Engine stopped: continuity

   Engine running: no continuity

9. INSPECT BRAKE WARNING LIGHT

(a) Inspect the parking brake warning light.
   (1) Disconnect the connector from the parking brake switch and ground terminal on the wire harness side connector.
   (2) Turn the ignition switch ON and check that the warning light lights up.

(b) Inspect the brake fluid level warning light.
   (1) Disconnect the connector from the brake fluid level warning switch and connect terminals on the wire harness side connector.
   (2) Turn the ignition switch ON and check that the warning light lights up.

10. INSPECT BRAKE FLUID LEVEL WARNING SWITCH

(a) Inspect the continuity.
   (1) Remove the reservoir tank cap and strainer.
   (2) Disconnect the connector.
   (3) Check that the continuity exists between the terminals.

   Float up (switch off): No continuity

   (4) Use syphon, etc., to take fluid out of the reservoir tank.
   (5) Check that the continuity exists between the terminals.

   Float down (switch on): Continuity

   (6) Pour the fluid back in the reservoir tank.

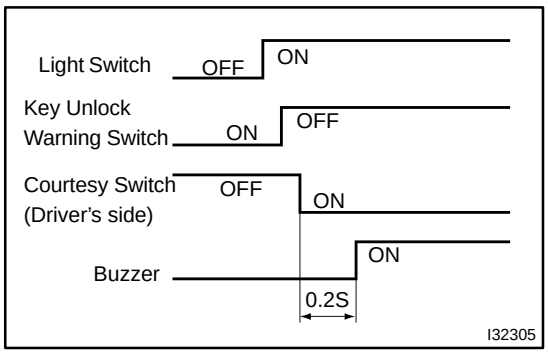

11. INSPECT LIGHT AUTO TURN OFF BUZZER

(a) Check the operation.

HINT:

When the key unlock warning and light auto turn off warning is output simultaneously, the key unlock warning precedes the other.

(1) Remove the ignition key with the tail light switch ON and the driver side door open and check for the buzzer.

Buzzer sound: Continuous

(2) While the buzzer is sounding, perform any of the following and check that the buzzer sound is stopped.

- Turn the tail light switch OFF.
- Close the driver side door.
- Insert the ignition key into the key cylinder.

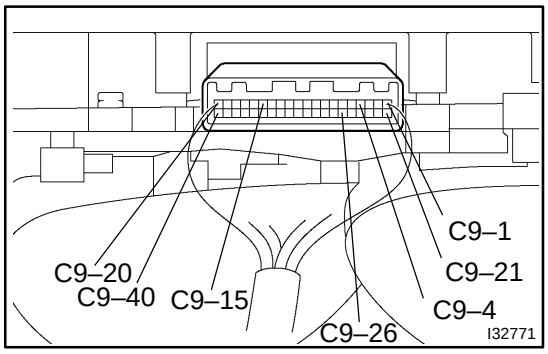

(b) Check the function.

(1) Remove the combination meter.

(2) Connect the position (+) lead from battery to terminal C9–1 and negative (–) lead to terminal C9–20 and C9–40.

(3) Connect the position (+) lead from battery to terminal C9–4 and negative (–) lead to terminal C9–15 and C9–26, check that the buzzer sound.

Buzzer sound: Continuous

(4) While the buzzer is sounding, connect the battery positive terminal to terminal C9–21 and check that the buzzer sound is stopped.

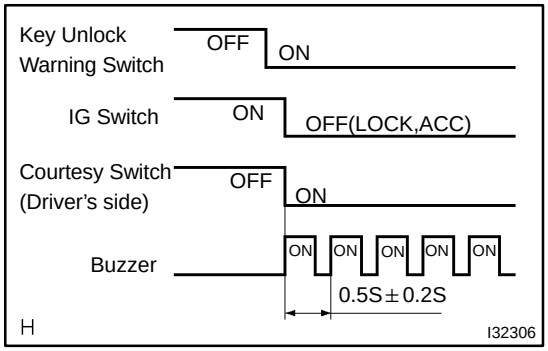

12. INSPECT KEY UNLOCK WARNING BUZZER

(a) Check the operation.

HINT:

When the key unlock warning and light auto turn off warning is output simultaneously, the key unlock warning precedes the other.

(1) While the driver side door is open, insert the ignition key, set the ignition switch to OFF (LOCK or ACC) and check for the buzzer sound.

Buzzer sound: Intermittent

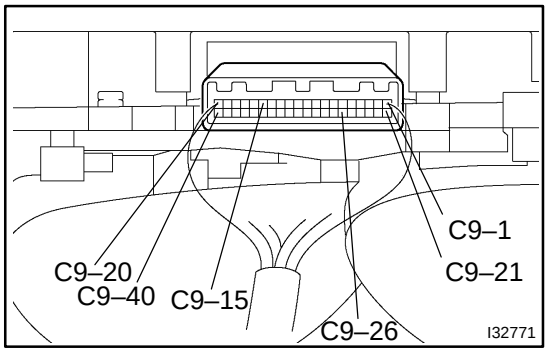

(b) Check the function.

(1) Remove the combination meter.

(2) Connect the position (+) lead from battery to terminal C9–1 and negative (–) lead to terminal C9–20 and C9–40.

(3) Connect the negative (–) lead to terminal C9–15 and C9–26, check that the buzzer sound.

Buzzer sound: Intermittent

(4) While the buzzer is sounding, connect the battery positive terminal to terminal C9–21 and check that the buzzer sound is stopped.

COMBINATION METER

PROBLEM SYMPTOMS TABLE

7108U–01

Warning Lights:

Symptom	Suspect Area	See page
Check Engine warning light does not light up.	1. Wire Harness or Connector 2. ECM 3. Combination Meter Assy	– – –
Discharge warning light does not light up.	1. Wire Harness or Connector 2. ECM 3. Combination Meter Assy	– – –
Brake warning light does not light up.	1. Wire Harness or Connector 2. Brake Actuator Assy 3. Combination Meter Assy	– 05–316 –
ABS warning light does not light up.	1. Wire Harness or Connector 2. Brake Actuator Assy 3. Combination Meter Assy	– 05–316 –
SRS warning light does not light up.	1. Wire Harness or Connector 2. Airbag Sensor Assy Center 3. Combination Meter Assy	– 05–543 –
Open Door warning light does not light up.	1. Wire Harness or Connector 2. Courtesy Lamp Switch 3. Combination Meter Assy	– 65–7 –
Fuel Level warning light does not light up.	1. Wire Harness or Connector 2. Fuel Sender Gage Assy 3. Combination Meter Assy	– 05–831 –
Low Oil Pressure warning light does not light up.	1. Wire Harness or Connector 2. Oil Pressure Switch Assy 3. Combination Meter Assy	– 71–2 –

Indicator Lights:

Symptom	Suspect Area	See page
Turn indicator light does not light up.	1. Wire Harness or Connector 2. Turn Signal and Hazard Warning System 3. Combination Meter Assy	– 65–7 –
High Beam indicator light does not light up.	1. Wire Harness or Connector 2. Headlight Dimmer Switch 3. Combination Meter Assy	– 65–7 –
O/D OFF indicator light does not light up.	1. Wire Harness or Connector 2. O/D Main Switch Circuit 3. ECM 4. Combination Meter Assy	– 05–371 – –

FRONT SEAT (DRIVER SIDE)

COMPONENTS

720A4–01

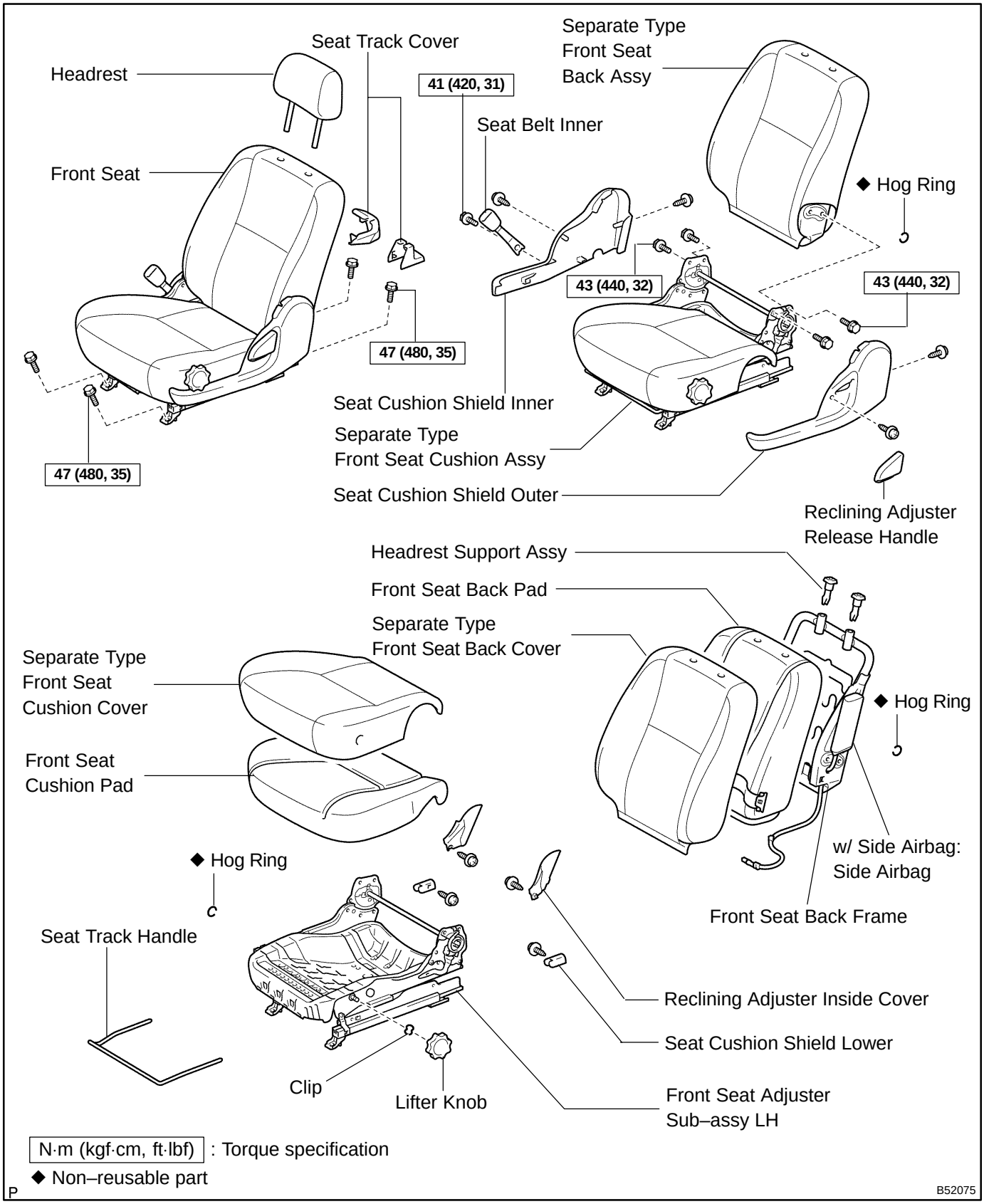

720A5–01

OVERHAUL

CAUTION:

Wear the gloves, because the cutting surface of the seat back frame and seat adjuster may injure your hand.

HINT:

Tape the screwdriver tip before prying parts with it.

1. DISCONNECT BATTERY NEGATIVE TERMINAL

CAUTION:

Wait for 90 seconds after disconnecting the battery negative terminal when disconnecting the airbag connector.

2. REMOVE FRONT SEAT

(a) Remove the headrest.

(b) Remove the seat track covers and 4 bolts.

(c) Slide the seat to the most rear position.

(d) Disconnect the connector(s) under the seat.

(e) Remove the seat.

NOTICE:

Be careful not to damage the vehicle.

3. REMOVE SEPARATE TYPE FRONT SEAT BACK ASSY

(a) Remove the bolt and seat belt inner.

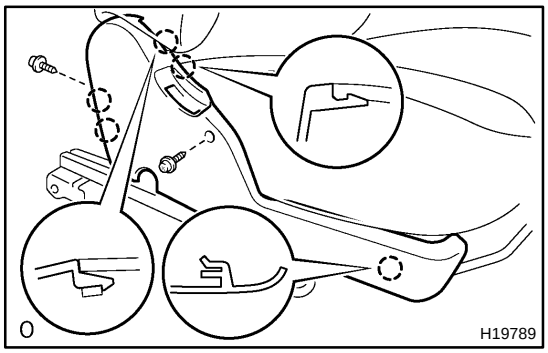

(b) Remove the 2 screws and seat cushion shield inner.

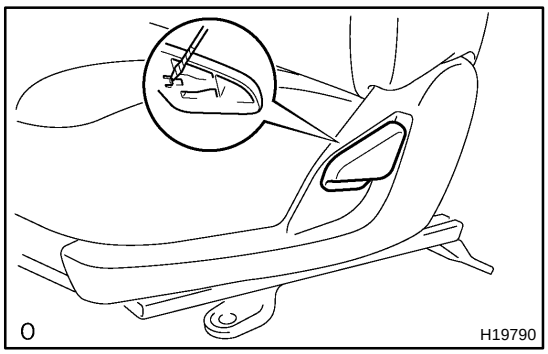

(c) Using a screwdriver, remove the reclining adjuster release handle.

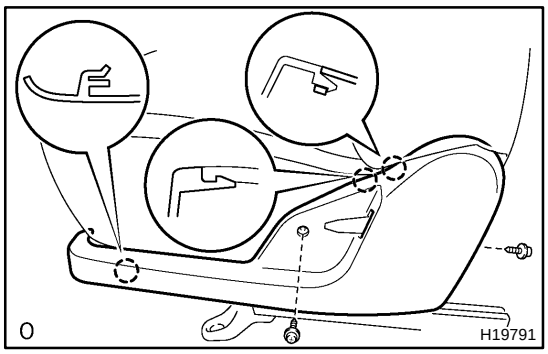

(d) Remove the 2 screws and seat cushion shield outer.
(e) w/ Side airbag:
Disconnect the airbag wire under the seat.
(f) Remove the hog rings, 4 bolts and seat back.

4. REMOVE SEPARATE TYPE FRONT SEAT BACK COVER

(a) Remove the hog rings and turn up the seat back cover.

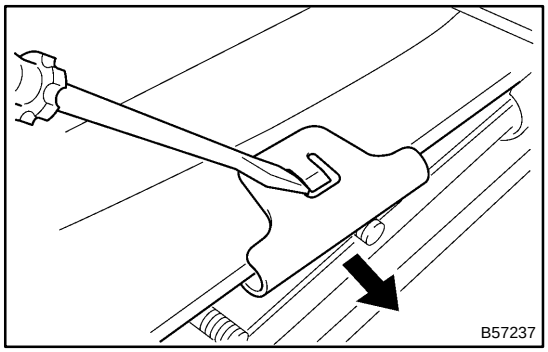

(b) w/ Side airbag:
Using a screwdriver, disconnect the clip.
(c) Remove the 2 headrest supports, seat back cover and seat back pad.

5. REMOVE SEPARATE TYPE FRONT SEAT CUSHION COVER

(a) w/ Seat lifter:
Using a screwdriver, remove the clip and lifter knob.
(b) Remove the hog rings, seat cushion cover and seat cushion pad.

6. REMOVE FRONT SEAT ADJUSTER SUB–ASSY LH

(a) Remove the 2 screws and 2 reclining adjuster inside covers.
(b) Remove the 2 screws and 2 seat cushion shield lowers.
(c) Remove the seat track handle.

7. INSTALL FRONT SEAT ADJUSTER SUB–ASSY LH

(a) Install the seat track handle.
(b) Install the 2 seat cushion shield lowers with the 2 screws.
(c) Install the 2 reclining adjuster inside covers with the 2 screws.

8. INSTALL SEPARATE TYPE FRONT SEAT CUSHION COVER

(a) Install the seat cushion pad to the seat adjuster.

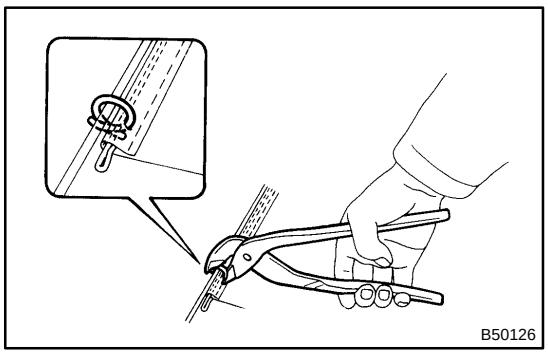

(b) Using hog ring pliers, install the seat cushion cover with new hog rings.

NOTICE:

- **Be careful not to damage the cover.**
- **Be careful to prevent the cover wrinkles as little as possible.**

(c) w/ Seat lifter:
Install the lifter knob with the clip.

9. INSTALL SEPARATE TYPE FRONT SEAT BACK COVER

(a) Install the seat back pad to the seat back frame.
(b) Cover the top of the seat back with the seat back cover.
(c) Install the 2 headrest supports.

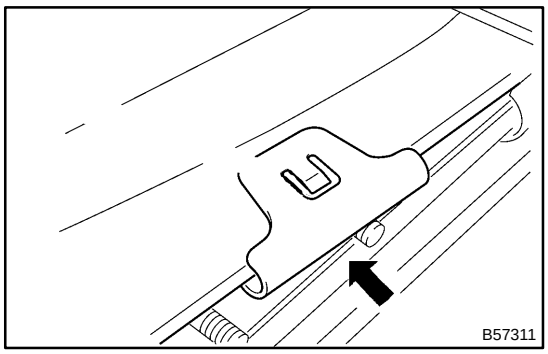

(d) w/ Side airbag:
Connect the clip.
(e) Using hog ring pliers, install the seat back cover with new hog rings.

NOTICE:

- **Be careful not to damage the cover.**
- **Be careful to prevent the cover wrinkles as little as possible.**

10. INSTALL SEPARATE TYPE FRONT SEAT BACK ASSY

(a) Install the seat back with the 4 bolts.
Torque: 43 N·m (440 kgf·cm, 32 ft·lbf)
(b) Using hog ring pliers, install new hog rings.
(c) Install the cushion shield outer with the 2 screws.
(d) Install the reclining adjuster release handle.
(e) Install the cushion shield inner with the 2 screws.
(f) Install the seat belt inner with the bolt.
Torque: 41 N·m (420 kgf·cm, 31 ft·lbf)
(g) Check that the seat belt inner moves smoothly.

11. INSTALL FRONT SEAT

(a) Slide the seat to the most rear position.
(b) Place the seat on the cabin.

NOTICE:

Be careful not to damage the body.

(c) Connect the connector(s) under the seat.
(d) Install the front seat with the 4 bolts.
Torque: 47 N·m (480 kgf·cm, 35 ft·lbf)
(e) Install the seat track covers.
(f) Install the headrest.

REAR SEAT ASSY

COMPONENTS

720A8–01

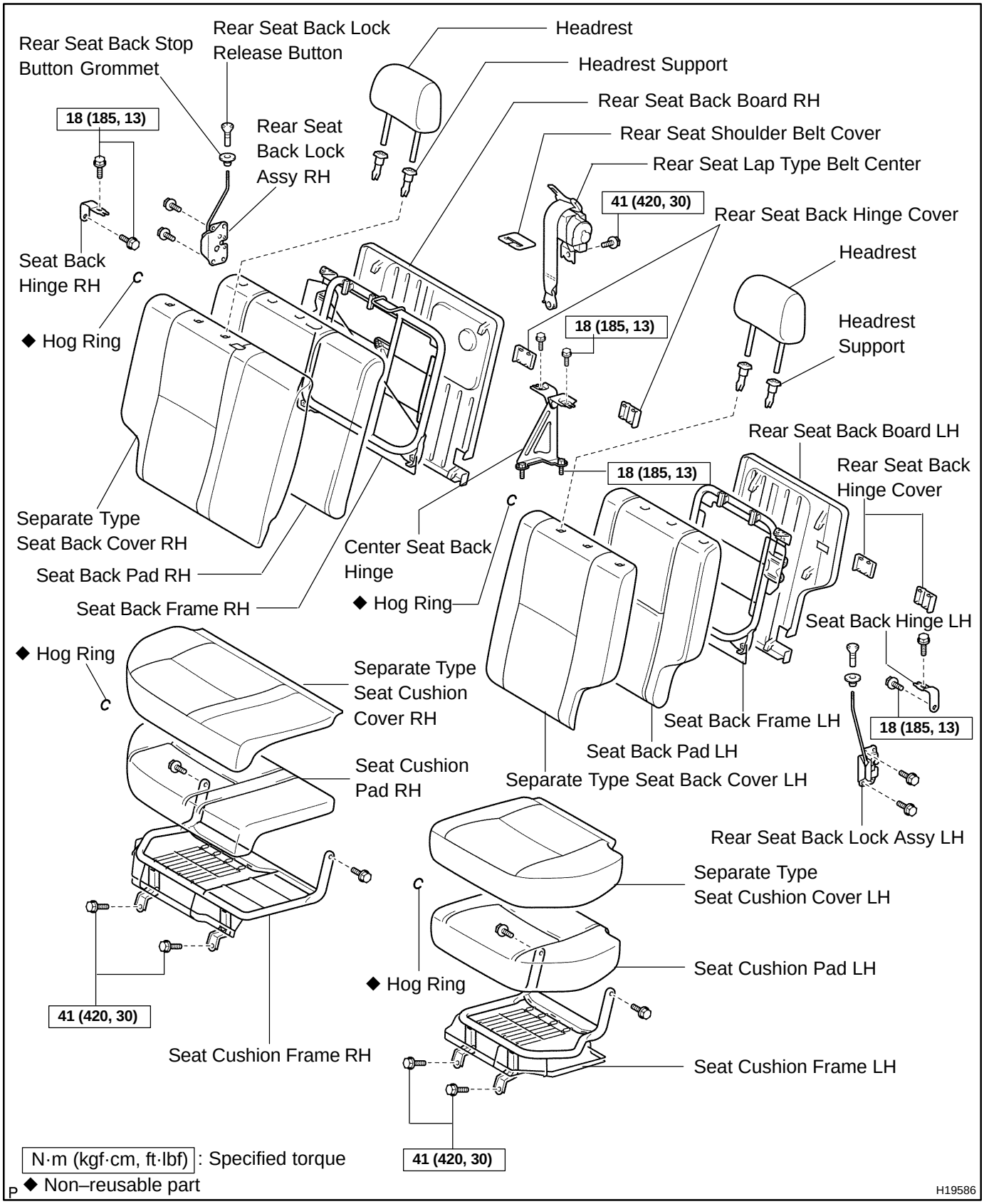

720A9–01

OVERHAUL

CAUTION:

Wear the gloves, because the cutting surface of the seat back frame and seat cushion frame may injure your hand.

HINT:

Tape the screwdriver tip before prying parts with it.

1. REMOVE REAR SEAT ASSY LH

(a) Remove the headrest.
(b) Using a screwdriver, remove the 2 seat back hinge covers.
(c) Remove the 4 bolts and rear seat assembly LH.
(d) Employ the same manner described above to the other side.

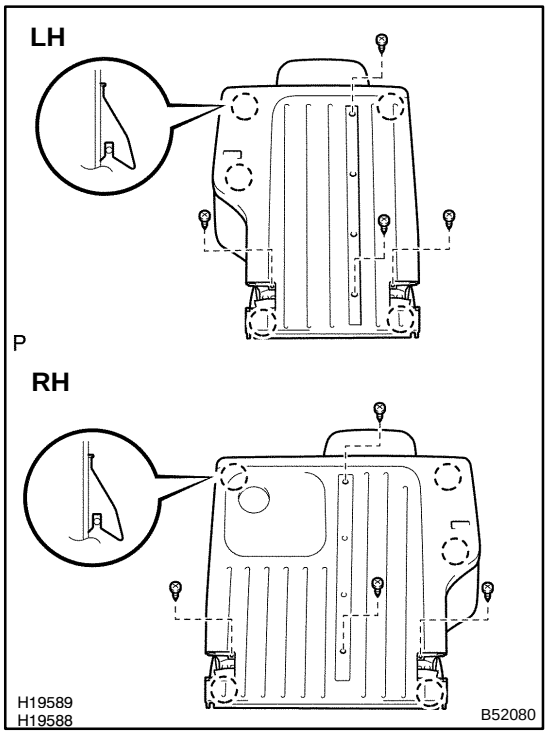

2. REMOVE SEPARATE TYPE REAR SEAT BACK ASSY LH

(a) Remove the 4 screws and rear seat back board LH.
(b) Remove the 2 bolts and rear seat back LH.
(c) Employ the same manner described above to the other side.

3. REMOVE SEPARATE TYPE REAR SEAT BACK COVER LH

(a) Remove the 2 headrest supports.
(b) Remove the rear seat back lock release button.
(c) Remove the rear seat back stop button grommet.
(d) Remove the hog rings and rear seat back cover.

4. REMOVE SEPARATE TYPE REAR SEAT BACK COVER RH

(a) Remove the 2 headrest supports.
(b) Remove the rear seat back lock release button.
(c) Remove the rear seat back stop button grommet.
(d) Using a screwdriver, remove the rear seat shoulder belt cover.
(e) Remove the bolt and rear seat lap type belt center.
(f) Remove the hog rings and rear seat back cover.

5. REMOVE SEPARATE TYPE REAR SEAT CUSHION COVER LH

(a) Remove the hog rings and rear seat cushion cover LH.
(b) Employ the same manner described above to the other side.

6. REMOVE REAR SEAT BACK LOCK ASSY LH

(a) Remove the 2 bolts and rear seat back lock LH.

(b) Employ the same manner described above to the other side.

7. INSTALL REAR SEAT BACK LOCK ASSY LH

(a) Install the rear seat back lock LH with the 2 bolts.

(b) Employ the same manner described above to the other side.

8. INSTALL SEPARATE TYPE REAR SEAT CUSHION COVER LH

(a) Install the seat cushion pad LH to the seat cushion frame LH.

(b) Using hog ring pliers, install the seat cushion cover LH with new hog rings.

NOTICE:

- **Be careful not to damage the cover.**
- **Be careful to prevent the cover wrinkles as little as possible.**

(c) Employ the same manner described above to the other side.

9. INSTALL SEPARATE TYPE REAR SEAT BACK COVER RH

(a) Install the seat back pad RH to the seat back frame RH.

(b) Using hog ring pliers, install the seat back cover RH with new hog rings.

NOTICE:

- **Be careful not to damage the cover.**
- **Be careful to prevent the cover wrinkles as little as possible.**

(c) Install the rear seat lap type belt center with the bolt.

Torque: 41 N·m (420 kgf·cm, 30 ft·lbf)

(d) Install the rear seat shoulder belt cover.

(e) Install the 2 headrest supports.

10. INSTALL SEPARATE TYPE REAR SEAT BACK COVER LH

(a) Install the seat back pad LH to the seat back frame LH.

(b) Using hog ring pliers, install the seat back cover LH with new hog rings.

NOTICE:

- **Be careful not to damage the cover.**
- **Be careful to prevent the cover wrinkles as little as possible.**

(c) Install the rear seat back stop button grommet.

(d) Install the rear seat back lock release button.

(e) Install the 2 headrest supports.

11. INSTALL SEPARATE TYPE REAR SEAT BACK ASSY LH

(a) Install the rear seat back LH with the 2 bolts.

Torque: 18 N·m (185 kgf·cm, 13 ft·lbf)

(b) Install the rear seat back board LH with the 4 screws.

(c) Employ the same manner described above to the other side.

12. INSTALL REAR SEAT ASSY LH

(a) Install the rear seat assembly LH with the 4 bolts.

Torque: 41 N·m (420 kgf·cm, 30 ft·lbf)

(b) Install the headrest.

(c) Employ the same manner described above to the other side.

FRONT SEAT (PASSENGER SIDE)

COMPONENTS

720A6–01

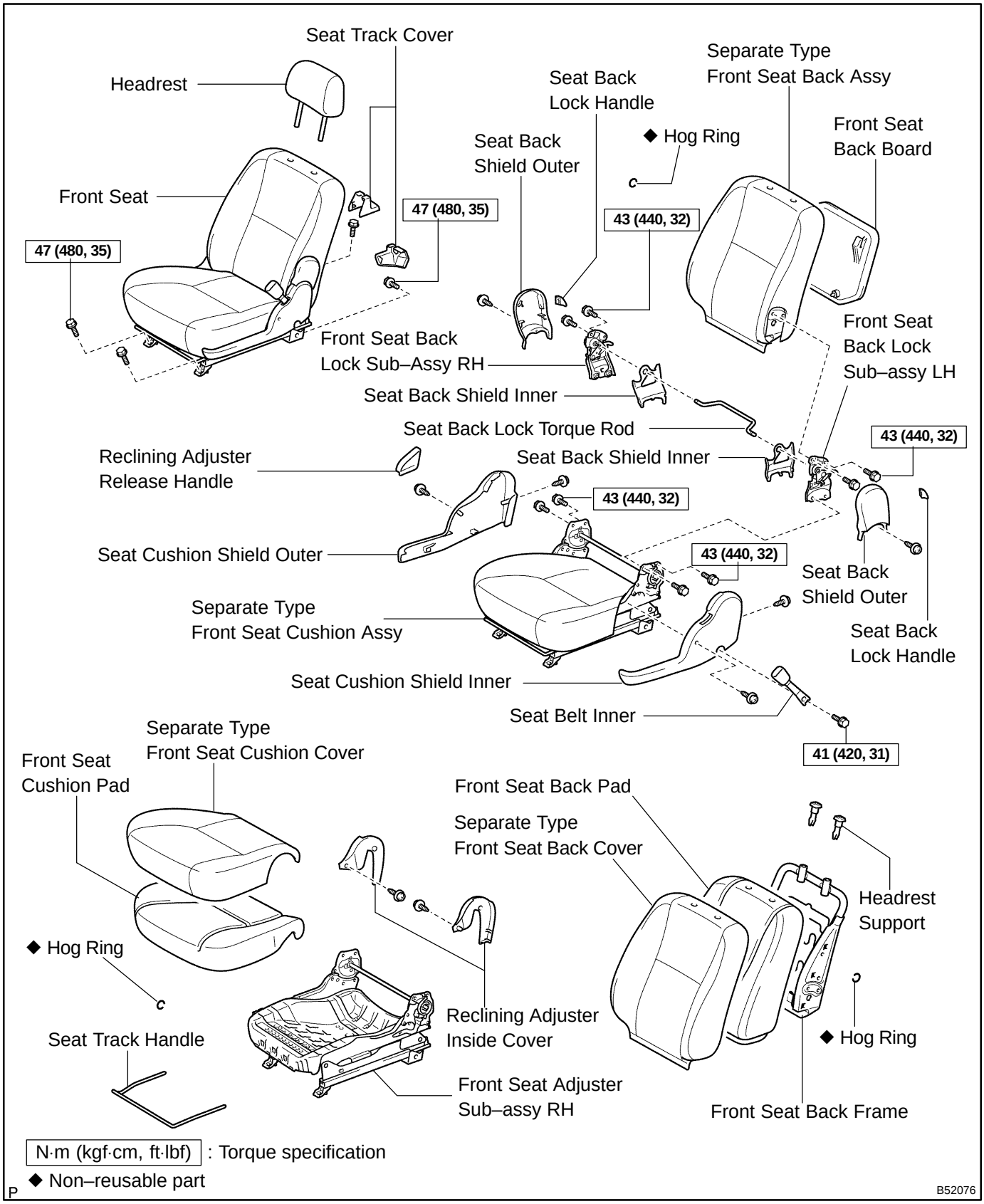

720A7–01

OVERHAUL

CAUTION:

Wear the gloves, because the cutting surface of the seat back frame and seat adjuster may injure your hand.

HINT:

Tape the screwdriver tip before prying parts with it.

1. DISCONNECT BATTERY NEGATIVE TERMINAL

2. REMOVE FRONT SEAT

(a) Remove the headrest.

(b) Remove the seat track covers and 4 bolts.

(c) Slide the seat to the most rear position.

(d) Disconnect the connector under the seat.

(e) Remove the seat.

NOTICE:

Be careful not to damage the vehicle.

3. REMOVE SEPARATE TYPE FRONT SEAT BACK ASSY

(a) Remove the bolt and seat belt inner.

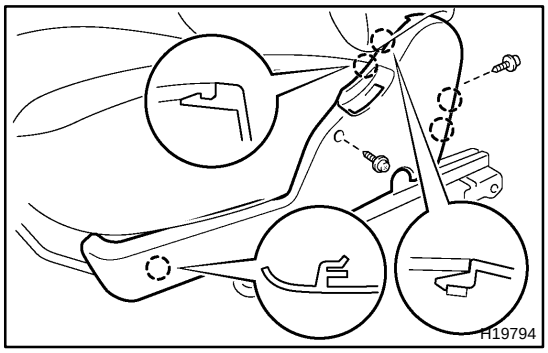

(b) Remove the 2 screws and seat cushion shield inner.

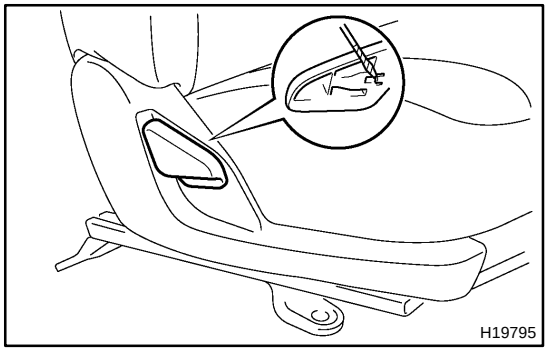

(c) Using a screwdriver, remove the reclining adjuster release handle.

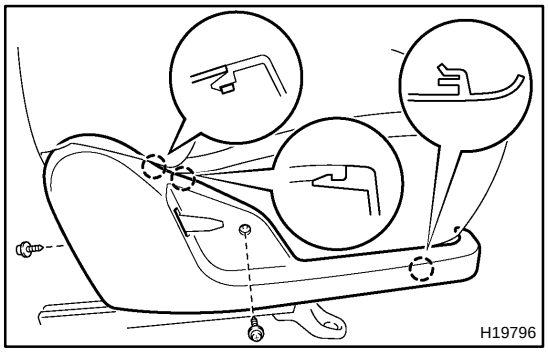

(d) Remove the 2 screws and seat cushion shield outer.

(e) Remove the hog rings, 4 bolts and seat back assy.

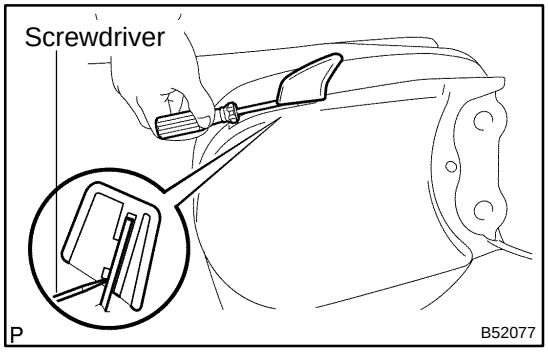

4. REMOVE FRONT SEAT BACK LOCK SUB–ASSY LH

(a) Using a screwdriver, remove the seat back lock handle.

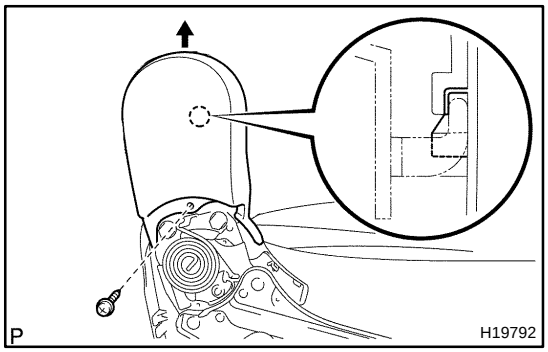

(b) Remove the screw and seat back shield outer.
(c) Remove the 2 bolts and seat back lock sub–assy LH.
(d) Employ the same manner described above to the other side.

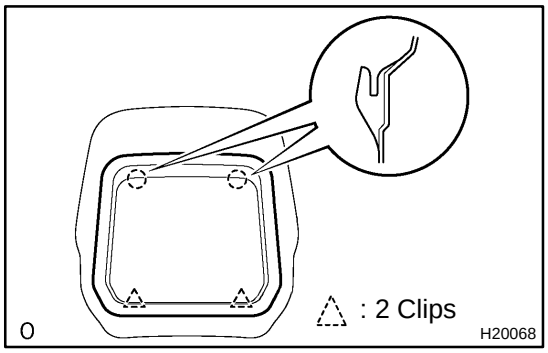

5. REMOVE SEPARATE TYPE FRONT SEAT BACK COVER

(a) Remove the front seat back board.
(b) Remove the seat back lock handle torque rod.
(c) Remove the hog rings and turn up the seat back cover.
(d) Remove the 2 headrest supports, seat back cover and seat back pad.

6. REMOVE SEPARATE TYPE FRONT SEAT CUSHION COVER

(a) Remove the hog rings, seat cushion cover and seat cushion pad.

7. REMOVE FRONT SEAT ADJUSTER SUB–ASSY RH

(a) Remove the 2 reclining adjuster inside covers and seat track handle.

8. INSTALL FRONT SEAT ADJUSTER SUB–ASSY RH

(a) Install the 2 reclining adjuster inside covers and seat track handle.

9. INSTALL SEPARATE TYPE FRONT SEAT CUSHION COVER

(a) Install the seat cushion pad to the seat adjuster.
(b) Using hog ring pliers, install the seat cushion cover with new hog rings.

NOTICE:

- **Be careful not to damage the cover.**
- **Be careful to prevent the cover wrinkles as little as possible.**

10. INSTALL SEPARATE TYPE FRONT SEAT BACK COVER

(a) Install the seat back pad to the seat back frame.
(b) Cover the top of the seat back with the seat back cover.
(c) Install the 2 headrest supports.
(d) Using hog ring pliers, install the seat back cover with new hog rings.

NOTICE:

- **Be careful not to damage the cover.**
- **Be careful to prevent the cover wrinkles as little as possible.**

11. INSTALL FRONT SEAT BACK LOCK SUB–ASSY LH AND RH

(a) Install the seat back lock sub–assy LH with the 2 bolts.
Torque: 43 N·m (440 kgf·cm, 32 ft·lbf)

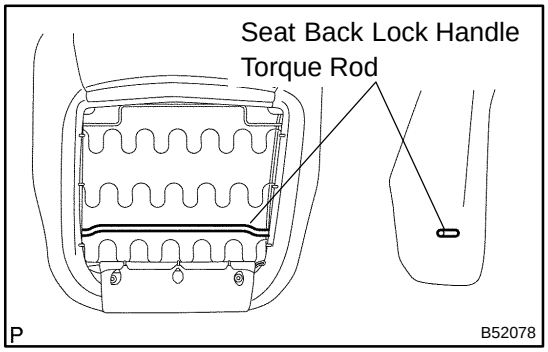

(b) Install the seat back lock handle torque rod as shown in the illustration.
(c) Install the seat back lock sub–assy RH with the 2 bolts.
Torque: 43 N·m (440 kgf·cm, 32 ft·lbf)
(d) Install the front seat back board.
(e) Install the 2 seat back shield outers with the 2 screws.
(f) Install the 2 seat back lock handles.

12. INSTALL SEPARATE TYPE FRONT SEAT BACK ASSY

(a) Install the seat back with the 4 bolts.
Torque: 43 N·m (440 kgf·cm, 32 ft·lbf)
(b) Install the cushion shield outer with the 2 screws.
(c) Install the reclining adjuster release handle.
(d) Install the cushion shield inner with the 2 screws.
(e) Install the seat belt inner with the bolt.
Torque: 41 N·m (420 kgf·cm, 31 ft·lbf)
(f) Check that the seat belt inner moves smoothly.

13. INSTALL FRONT SEAT

(a) Slide the seat to the most rear position.
(b) Place the seat on the cabin.

NOTICE:
Be careful not to damage the body.

(c) Connect the connector under the seat.
(d) Install the front seat with the 4 bolts.
Torque: 47 N·m (480 kgf·cm, 35 ft·lbf)
(e) Install the seat track covers.
(f) Install the headrest.

DOOR CONTROL TRANSMITTER

730BB–01

REGISTRATION

1. REGISTRATION OF RECOGNITION CODE

HINT:

- The add mode is used to retain the already registered codes while registering a new recognition code. This mode is used when adding a transmitter. If the number of the registered codes exceeds 4, the previously registered code will be correspondingly erased in order, starting from the first registered code.
- The rewrite mode is used to erase all the previously registered codes and register only new recognition codes. This mode is used when exchanging the transmitter or the door control receiver for new one.
- The prohibition mode is used to erase all the registered codes and cancel the wireless door lock function. Use this mode when the transmitter is lost.
- The confirmation mode is to confirm how many recognition codes have already been registered before an additional registration of a recognition code.
- All the following registration procedures must be performed in order continuously.

(a) The vehicle should be in the following conditions.
  (1) The key is not inserted in the ignition key cylinder.
  (2) Driver's door is OPENED. (The other doors are CLOSED)
  (3) Driver's door is UNLOCKED.

(b) Perform the following operations to select the desired mode.
  (1) Insert and remove the key from the ignition switch twice within 5 seconds.
  (2) After the above operations, close and open the driver door twice within 40 seconds. Then insert the key into the ignition key cylinder and remove it.
  (3) After the above operations, close and open the driver door twice within 40 seconds. Then insert the key into the ignition key cylinder and close the door.
  (4) Turn the ignition switch from LOCK to ON and back to LOCK at approximately 1 second interval 1 to 5 times to select a mode (see the table below). Then remove the key from the ignition key cylinder.

Number of ON–LOCK operation of ignition switch:

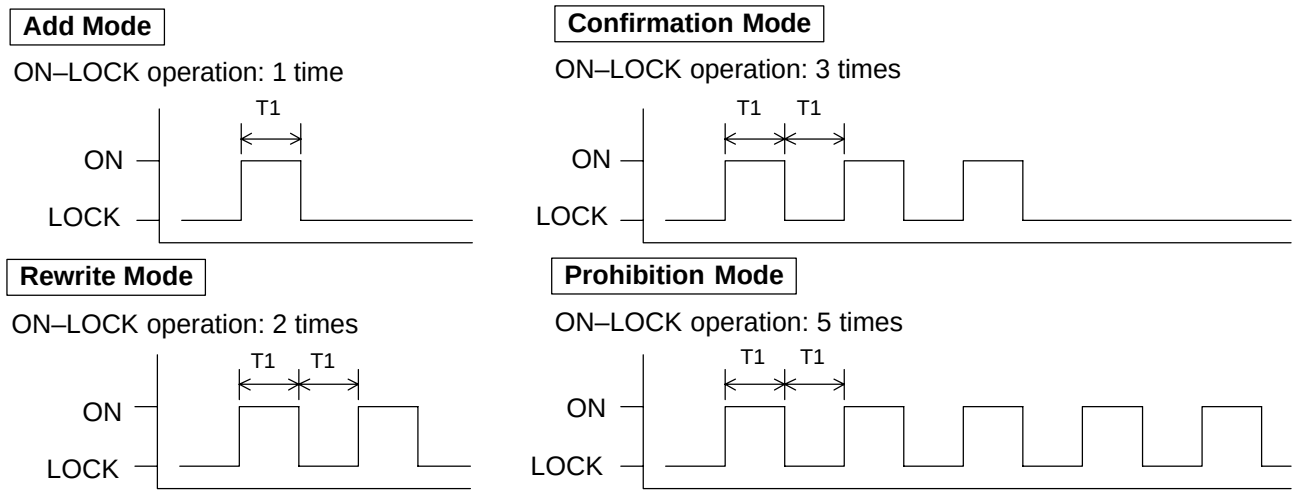

T1: Approx. 1 sec.

B58899

NOTICE:

If the number of the ON–LOCK operation of the ignition switch is 0, 4 or 6 or more, there will be no response (power door lock and unlock operation) to inform which mode has been selected.

(5) After selecting a mode, the integration relay automatically performs the power door LOCK–UNLOCK operation within 3 seconds to inform the selected mode (see the table below).

HINT:

- In the confirmation mode, when the operation is performed twice, it directs that 2 types of recognition codes have been registered.
- In the confirmation mode, If the number of the registration code is 0, the LOCK–UNLOCK operation is automatically performed 5 times.
- If the prohibition mode or confirmation mode is selected, registration procedure is completed.

Response of selected mode (Power door lock operation):

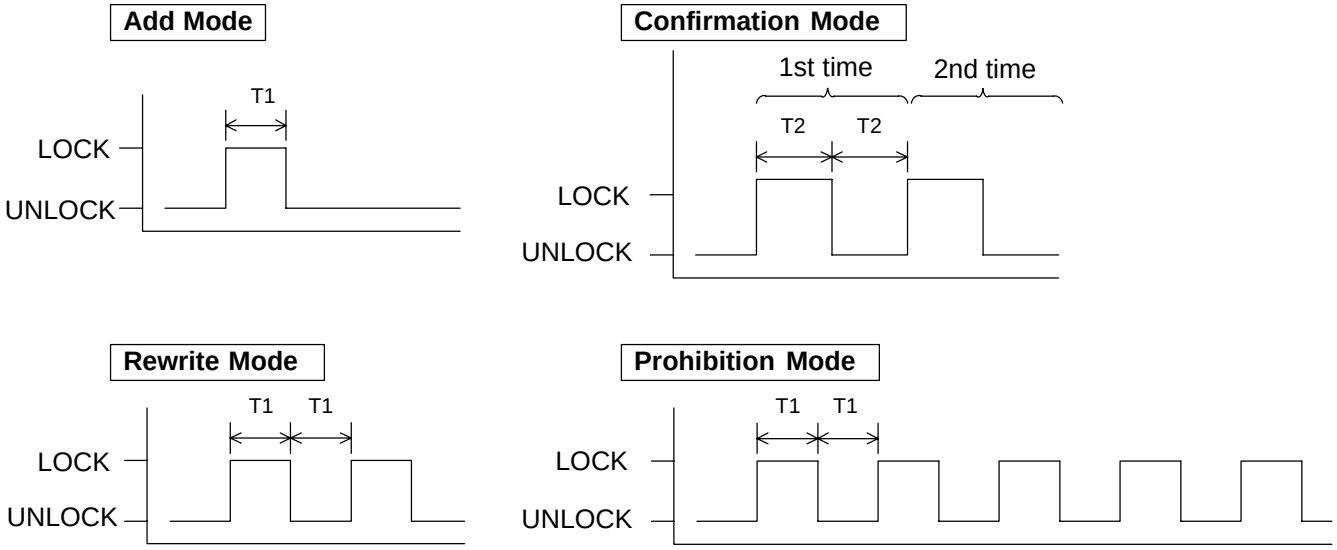

T1: Approx. 1 sec.
T2: Approx. 2 sec.

B50827

(c) Register the new recognition codes (Add mode or Rewrite mode):

(1) Within 40 seconds after the add mode or the rewrite mode has been selected, press the LOCK and UNLOCK switches on the transmitter switch simultaneously for 1.0 – 1.5 seconds.
Within 3 seconds after the previous operation, press either one of the switches for more than 1.0 seconds.

(2) Within 3 seconds after the transmitter switch has been turned OFF, the LOCK–UNLOCK operation will be automatically performed once if the registration of the recognition code of the transmitter is completed correctly. In case the LOCK–UNLOCK operation is performed twice, the registration of recognition code has failed. Perform the registration procedure from the beginning once again.

Response for registration completion:

LOCK–UNLOCK Occurs Once

Registration of recognition code has been completed.

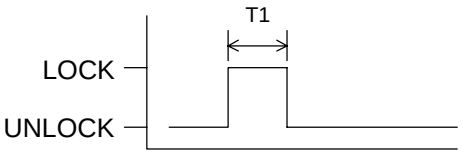

LOCK–UNLOCK Occurs Twice

Registration of recognition code has failed.

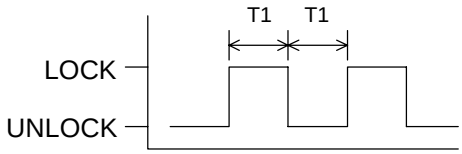

T1: Approx. 1 sec.

B58900

(3) If the multiple transmitter to be registered, repeat step (c) within 40 seconds after the previous registration.

HINT:

- 4 types of recognition codes can be registered at one time.
- If even one of the following conditions is satisfied, the registration mode will finish.
  - 40 seconds have elapsed while an input of each mode is ready.
  - Any of the doors is opened
  - The key plate is inserted in the ignition key cylinder.
  - 4 types of recognition codes are registered at once.

TOYOTA VEHICLE INTRUSION PROTECTION SYSTEM

730B7–01

ON–VEHICLE INSPECTION

1. OUTLINE OF TOYOTA VEHICLE INTRUSION PROTECTION (TVIP) SYSTEM

HINT:

The theft deterrent system has 2 modes; one is the active mode that is an initially set mode and another is the passive mode that can be switched ON/OFF by the specified method (See step 4).

(a) When the theft deterrent system detects any theft, the system will sound the horns and flash the lights to alert the people around the vehicle to the theft.

HINT:

Each mode (active and passive) has 4 states; disarmed state, arming preparation state, armed state, alarm sounding state.

(1) Disarmed state:
- The user is near the vehicle.
- The alarming function does not operate.
- The theft deterrent function does not operate.

(2) Arming preparation state:
- Time from the user locks a door to leave the vehicle.
- Time for transferring to the armed state.
- The theft deterrent function does not operate.

(3) Armed state:
- The user leaves the vehicle completely.
- The theft deterrent function operates.

(4) Alarm sounding state:

Once a theft is detected in the armed state, the system will sound the horns and flash the lights to alert the people around the vehicle to the theft.

Refer to the table for the alarming method and time.

Alarming method	Room light	Illuminating (turn on)
	Headlight	Flashing at a cycle of approx. 0.4 sec.
	Hazard warning light	Flashing at a cycle of flasher relay
	Vehicle horn	Sounding at a cycle of approx. 0.4 sec.
Alarming time	Approx. 60 sec.	

HINT:

In the alarm sounding state, when either of the front doors is unlocked and no key is inserted in the ignition key cylinder, forced door lock signal is output.

2. ACTIVE ARMING MODE

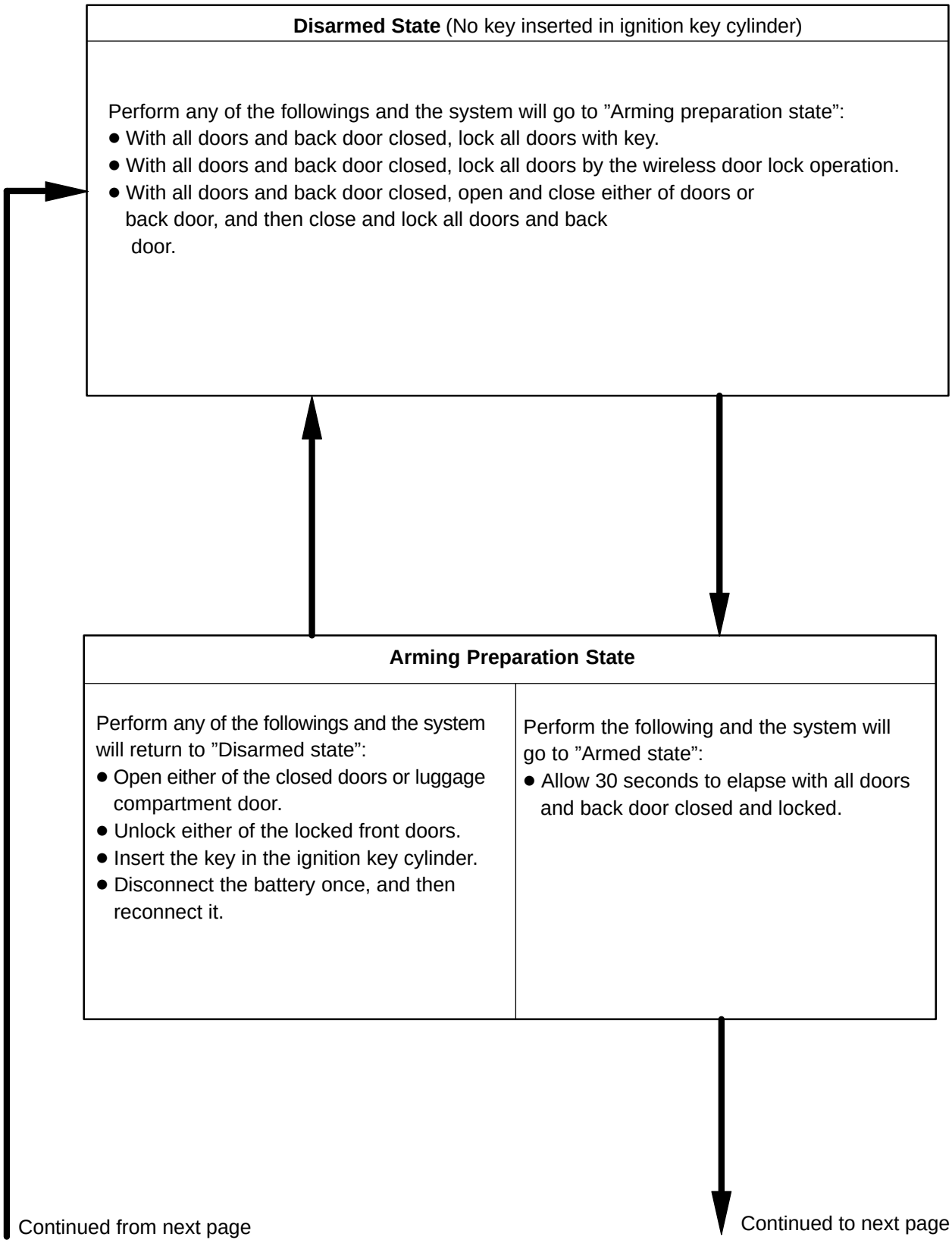

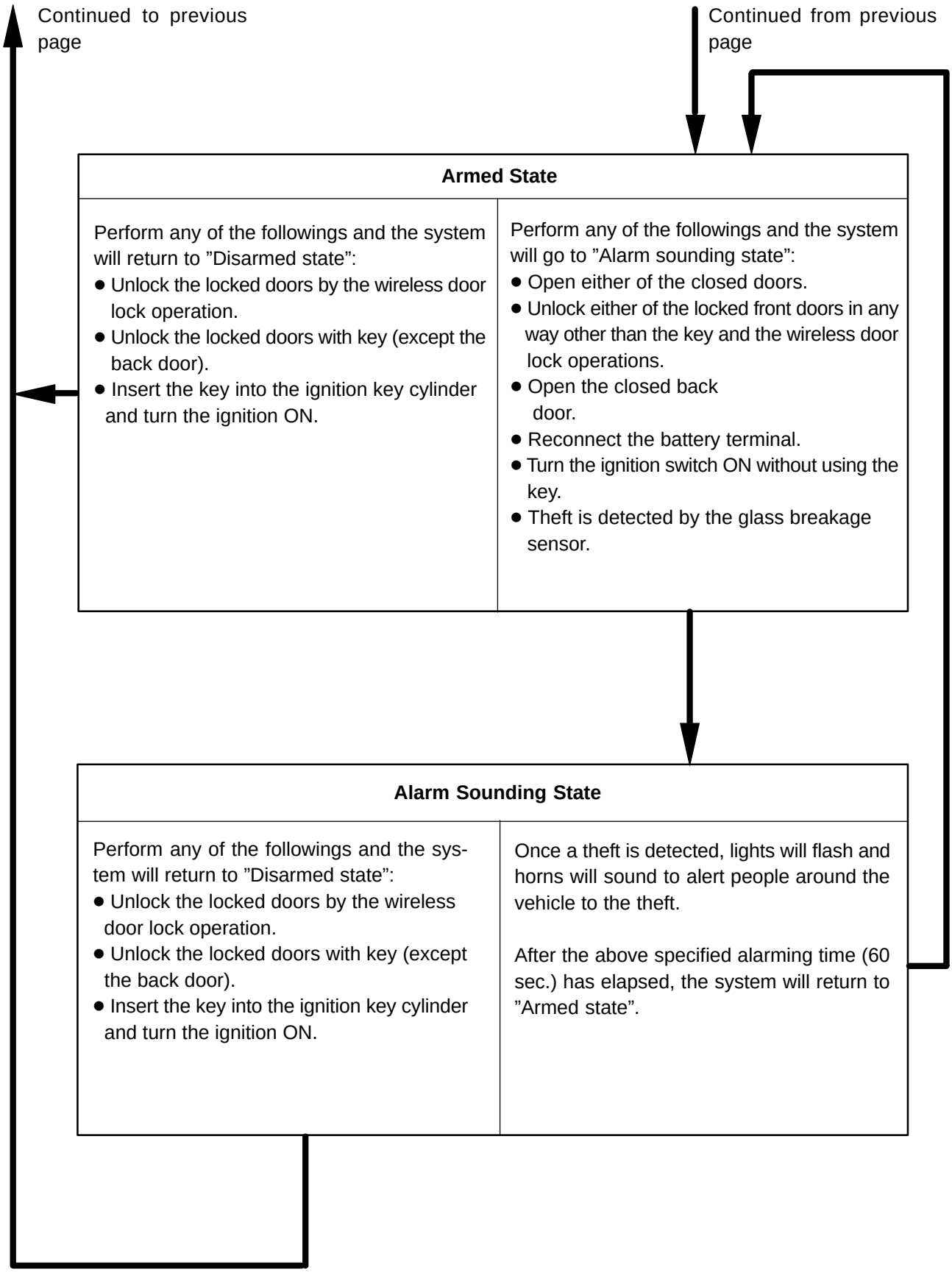
Continued to previous page
Continued from previous page
Armed State
Perform any of the followings and the system will return to ”Disarmed state”:
● Unlock the locked doors by the wireless door lock operation.
● Unlock the locked doors with key (except the back door).
● Insert the key into the ignition key cylinder and turn the ignition ON.
Perform any of the followings and the system will go to ”Alarm sounding state”:
● Open either of the closed doors.
● Unlock either of the locked front doors in any way other than the key and the wireless door lock operations.
● Open the closed back door.
● Reconnect the battery terminal.
● Turn the ignition switch ON without using the key.
● Theft is detected by the glass breakage sensor.
Alarm Sounding State
Perform any of the followings and the system will return to ”Disarmed state”:
● Unlock the locked doors by the wireless door lock operation.
● Unlock the locked doors with key (except the back door).
● Insert the key into the ignition key cylinder and turn the ignition ON.
Once a theft is detected, lights will flash and horns will sound to alert people around the vehicle to the theft.
After the above specified alarming time (60 sec.) has elapsed, the system will return to ”Armed state”.

Indicator light output:

Condition	Indicator light
Disarmed state	OFF
Arming preparation state	ON
Armed state	BLINK
Alarm sounding state	ON

HINT:

Blinking frequency:

0.2 seconds (ON)

1.8 seconds (OFF)

3. PASSIVE ARMING MODE

- This mode can be switched according to the specified method (See step 4).
- Initially set mode (when shipped from factory) is the active mode (No passive mode).

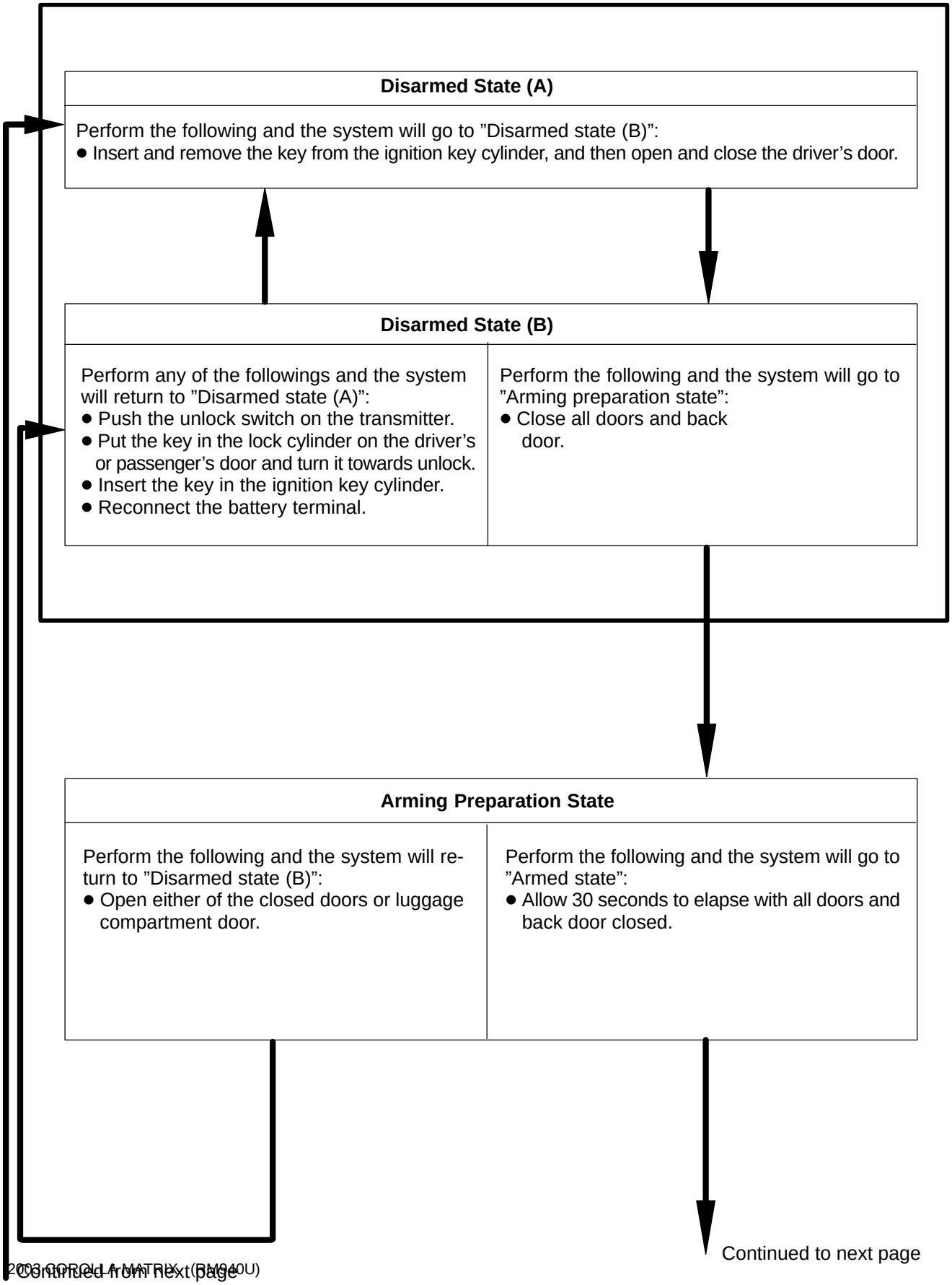

Continued to previous page

Continued from previous page

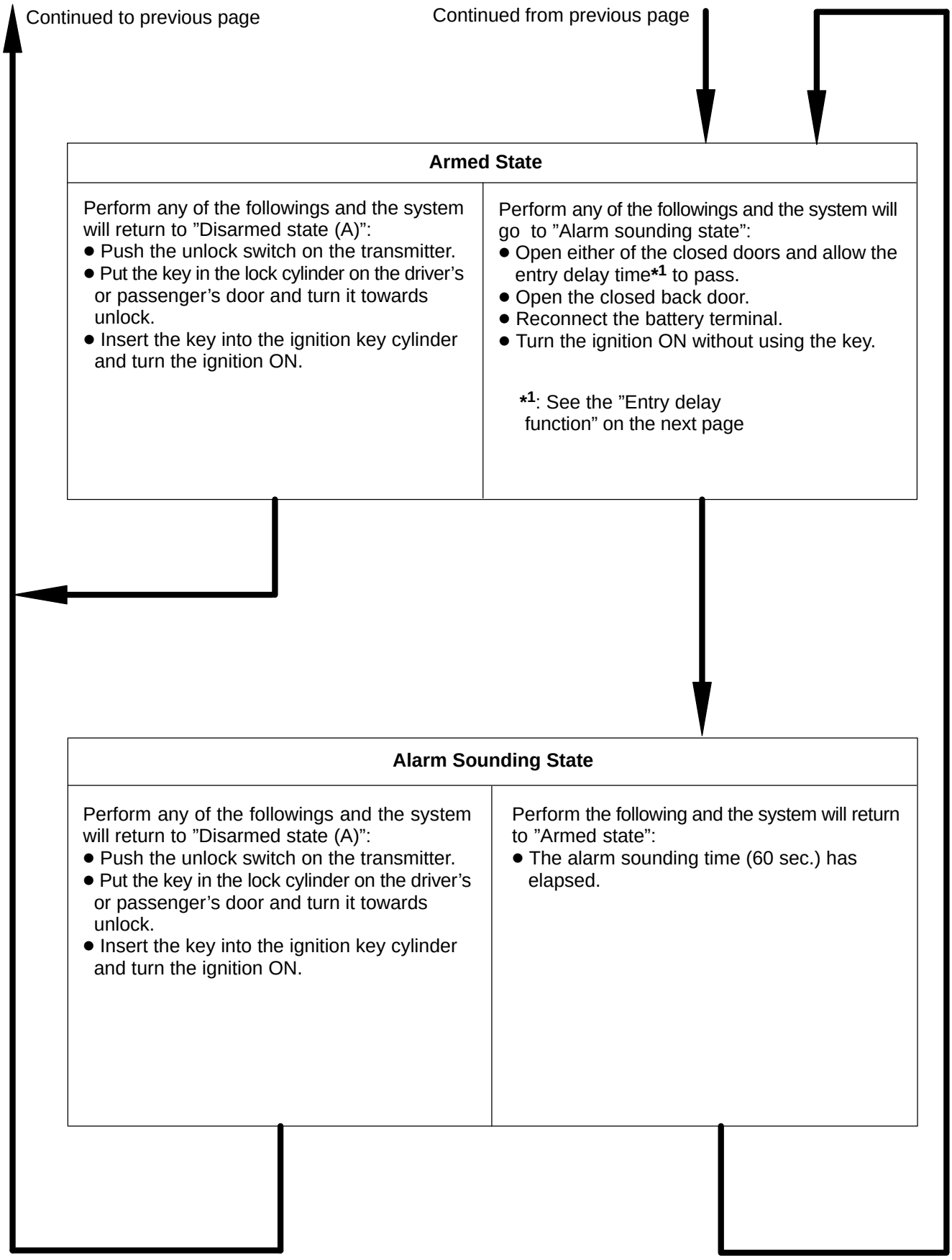

Entry delay function:

HINT:

In the armed state, if either closed door is opened, entry delay time will start.

If the transferring condition (Armed state → Disarmed state) is satisfied during this entry delay time, the system will transfer to the disarmed state. However if the condition is not satisfied, the system will judge it to be a theft, and then the system will transfer to the alarm sounding state.

.

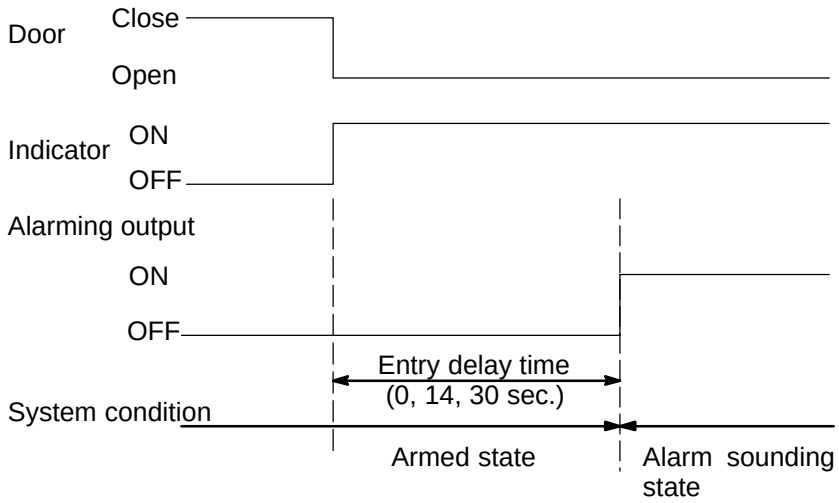

HINT:

The entry delay time can be selected among 0, 14, 30 seconds by the customizing function.

Indicator light output:

Condition	Indicator light
Disarmed state	OFF
Arming preparation state	ON
Armed state (Entry delay time)	BLINK (ON)
Alarm sounding state	ON

HINT:

Blinking frequency:

0.2 seconds (ON)

1.8 seconds (OFF)

Transfer to the active mode:

HINT:

In each state of the passive mode, when the transferring condition to the active mode (disarmed state of active mode → arming preparation state of active mode) is satisfied, the system will transfer to each state of the active mode. In this case, the active mode will continue until the system transfers to the disarmed state.

State of Passive Mode Before Transfer	State of Active Mode After Transfer
Disarmed state	Arming preparation state
Arming preparation state	Arming preparation state (continuing for 30 sec.)
Armed state (During entry delay time)	Armed state (After alarming time has elapsed, the system will transfer to the armed state)
Alarm sounding state	After alarming time has elapsed, the system will transfer to the armed state

4. CHANGING METHOD OF PASSIVE MODE (ON or OFF)

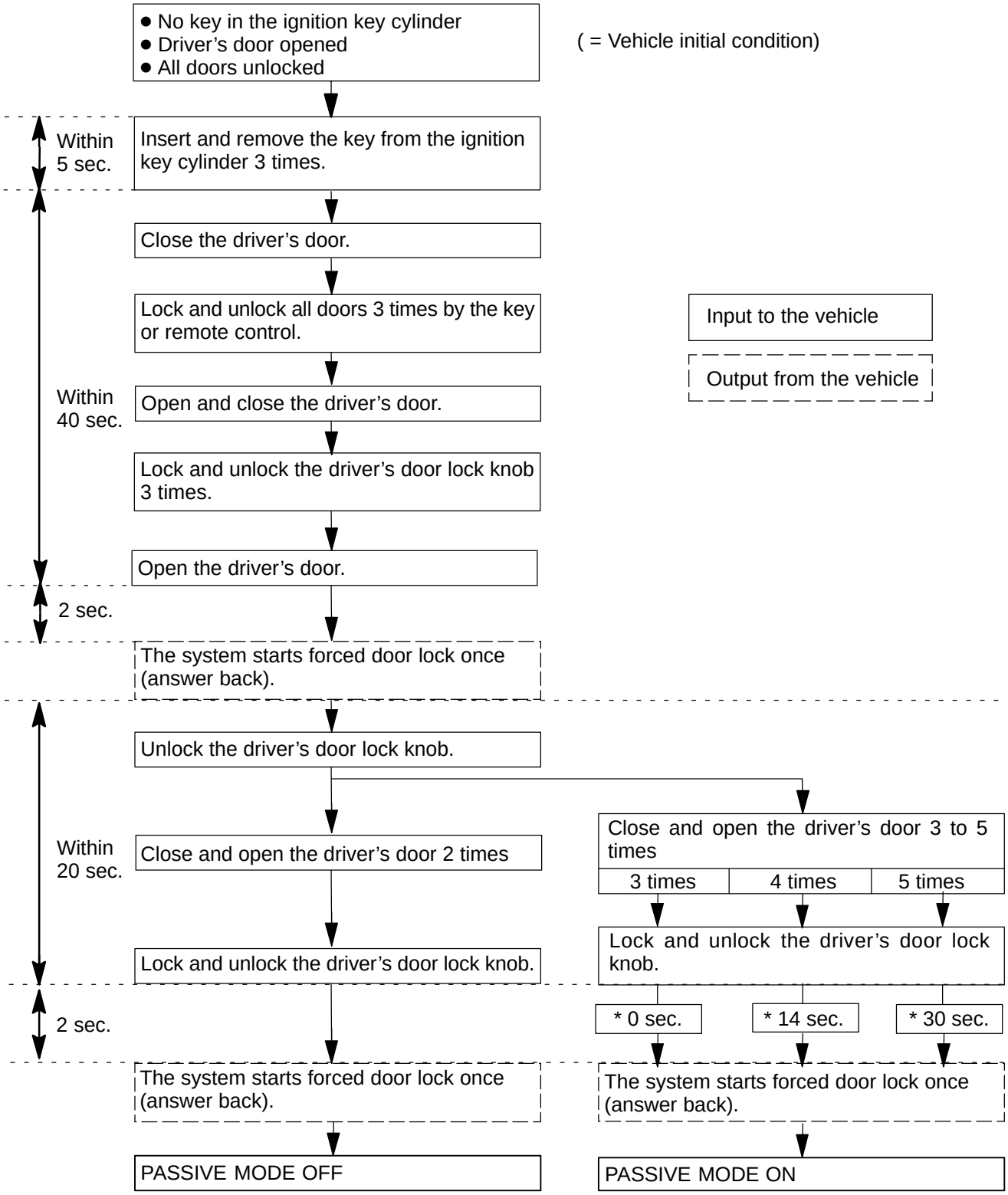

HINT:

- Initial mode is PASSIVE MODE OFF.
- If there is a different signal in the middle of changing, it is invalid.

*: Entry delay time

5. FORCED DOOR LOCK CONTROL

(a) Forced door lock is a control that prevents intrusion into vehicles. When a door is unlocked (when an alarm starts), instantaneously forced door lock will be executed.

(1) Condition to execute forced door lock:

Detecting any or all of the following conditions activates forced door lock.

- Theft deterrent system is in the alarm sounding state of the active mode.
- No key is in the ignition key cylinder.
- Any of the front doors is unlocked.
- Since the previous forced door lock, 0.38 seconds or more have elapsed.

(2) Conditions to stop forced door lock:

Detecting any of the following conditions stops forced door lock.

- All doors are locked.
- The alarm has finished.
- The key is inserted into the key cylinder.

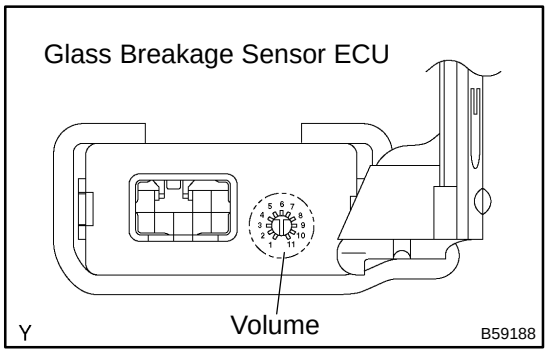

6. OPERATE GLASS BREAKAGE SENSOR

(a) If the glass breakage sensor detects the glass is broken (at 1st time), the sensor will issue an alarm for 20 seconds (pre–alarming). If the glass breakage sensor detects the glass is broken further more (at 2nd time), the sensor will issue an alarm for 60 seconds.

(b) The sensitivity of the glass breakage sensor can be adjusted by the volume switch in the glass breakage sensor ECU.

HINT:

Because the glass breakage sensor has a high sensitivity, it might issue a wrong alarm if it is adjusted in the volume of high sensitive.

730B9–01

ON–VEHICLE INSPECTION

1. INSPECT WIRELESS DOOR LOCK CONTROL FUNCTIONS

HINT:

The switch described in this text is a switch for transmission (LOCK switch, UNLOCK switch, HATCH switch and PANIC switch), which is built in the door control transmitter.

(a) Allow the vehicle to be in the initial condition (condition of wireless control is possible).
  (1) The followings are the vehicle's initial condition.
    - No key in the ignition key cylinder
    - All the doors closed (door open indicator off)
    - All the doors locked

(b) Check the basic function.
  (1) In the remote control operational area, check that all the doors will lock when pressing the LOCK switch. (It is, however, not the case that the key is in the ignition key cylinder or any of the doors is open).
  (2) Check that the driver's door will unlock when pressing the UNLOCK switch and pressing that switch once again within 3 seconds from the first press will unlock all the other doors. (It is, however, not the case that the key is in the ignition key cylinder).

HINT:

The UNLOCK operation is possible even when any of the doors is open.

(c) Check the chattering prevention function.
  (1) Check that the corresponding operation will be performed only once but not repeat continuously when the switch has been kept pressing. However, if the operations are carried out by approximately 1 second interval, from the time to release the switch until the time to press it again, check that a corresponding operation to the next press of the switch will be carried out.

(d) Check the automatic locking function.
  (1) Check that all the doors will automatically lock as long as any of the doors has not been opened or all the doors have not been locked within approximately 30 seconds after all the doors are unlocked by pressing the switch.
  (2) Under the above condition, the automatic locking function will not work if any of the doors has been opened or all the doors have been locked within approximately 30 seconds.

(e) Check the switch operation fail–safe function.
  (1) Check that the doors are not locked or unlocked by pressing the switch while the ignition key is in the ignition key cylinder. However, the time of the recognition code registration mode is excepted.

(f) Check the repeat function.
  (1) Check that all the doors will automatically lock once again in 1 second after the LOCK switch has been pressed while the move of the driver's door control knob, which is in unlocking state, is being blocked forcibly.

(g) Check the operation stop function when a door is open or not completely close.
  (1) Check that the doors are not locked by pressing the switch while any of the doors is open or not completely close. However, the glass hatch open operation is possible in this situation.

(h) Check the hazard flashing function (answer back).
  (1) Check that the hazard lights will flash once (when locked) or twice (when unlocked) simultaneously with all the doors' locking or unlocking operation, when the switch is pressed.

(i) Check the glass hatch open function.
  (1) Check that the glass hatch will open when the HATCH switch has been pressed for 0.8 seconds. (It is, however, not the case that the key is in the ignition key cylinder).

HINT:

The open operation is possible even when any of the doors is open.

(j) Check the remote panic function.
(1) Check that the theft alarm will sound and headlights and taillights will flash when the PANIC switch is pressed, and that sounding and flashing will stop when the PANIC or UNLOCK switch is pressed once again. (It is, however, not the case that the key is in the ignition key cylinder).

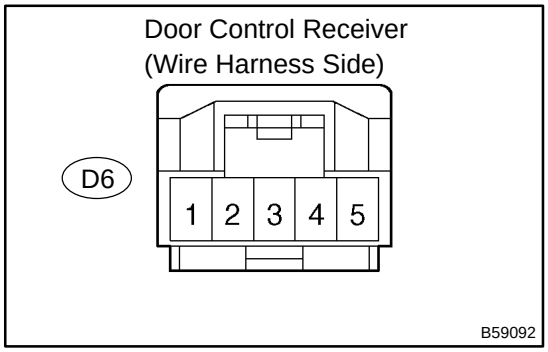

2. CHECK DOOR CONTROL RECEIVER

(a) Disconnect the connector from the door control receiver.
(b) Check the continuity and voltage between the terminals of the door control receiver connector and the body ground, as shown in the illustration and table.

Standard:

Symbols (Terminal No.)	Condition	Specified condition
GND (D6–1) – Body ground	Constant	Continuity
+B (D6–5) – Body ground	Constant	10 – 14 V

If the result is not as specified, the vehicle's side may be defective.

(c) Reconnect the connector and check the voltage between the terminal and the body ground.

Standard:

Symbols (Terminal No.)	Condition	Specified condition
RDA (D6–2) – Body ground	All door closed → Door control transmitter ON	1 V or less → 6 V → 1 V or less

If the result is not as specified, the vehicle's side may be defective.

WIRELESS DOOR LOCK CONTROL SYSTEM

730B8–01

PRECAUTION

1. NOTICES WHEN CHECKING

(a) The wireless door lock remote control operates only when the following 3 conditions are satisfied.
  (1) All the doors are closed. However, doors can be unlocked even when any of the doors is opened.
  (2) The key is not inserted in the ignition key cylinder. However, doors can be unlocked.
  (3) The power door lock operates normally.

(b) The wireless door lock remote control operational area varies with the situations.
  (1) The operational area varies with the operators or the ways to hold the transmitter.
  (2) The operational area will be narrowed down in some places due to the body configuration and the influence of the surrounding environment, or the remote control will not operate partially.
  (3) Because of using faint electric wave, in case that there is a strong electric wave or noise in the frequency used area, the operational area may be narrowed down or the remote control may not be operated.
  (4) When the battery is consumed, the operational area is narrowed down or the remote control is not operated.

HINT:
Leaving the door control transmitter on the exposed place to the direct sun light, such as on the instrument panel, may cause the battery wear or a trouble.

TRANSMITTER BATTERY

730BA–01

REPLACEMENT

1. REPLACE TRANSMITTER BATTERY

NOTICE:

Special caution should be taken for handling each component as they are precision electronic components.

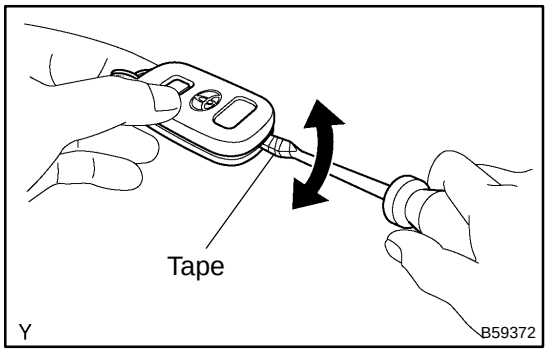

(a) Using a screwdriver, remove the cover.

NOTICE:

Do not pry out the cover forcibly.

HINT:

Tape the screwdriver tip before use.

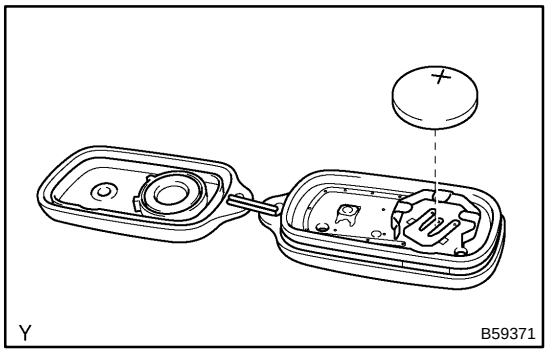

(b) Remove the battery (lithium battery).

NOTICE:

- **Do not push the terminals with a finger.**
- **If prying up the battery (lithium battery) forcibly to remove, the terminals are deformed.**

(c) Install a battery (lithium battery), as shown in the illustration.

NOTICE:

- **Face the battery upward.**
- **Take care not to deform the terminals.**

(d) Check that the rubber cover is not distorted or slipped off, and install the cover.

NOTICE:

It might cause faulty contact of battery (lithium battery) and terminals.

730BD–01

INSPECTION

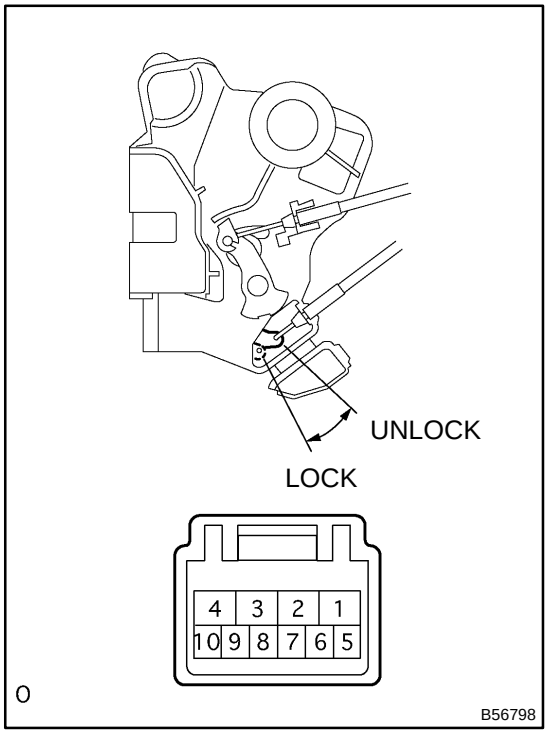

1. INSPECT FRONT DOOR LOCK ASSY LH

(a) Apply battery voltage and inspect the door lock motor operation, as show in the illustration and table.

Standard:

Measuring condition	Specified condition
Battery positive (+) Terminal – 4 Battery negative (–) Terminal – 1	Lock
Battery positive (+) Terminal – 1 Battery negative (–) Terminal – 4	Unlock

If the result is not as specified, replace the door lock assy.

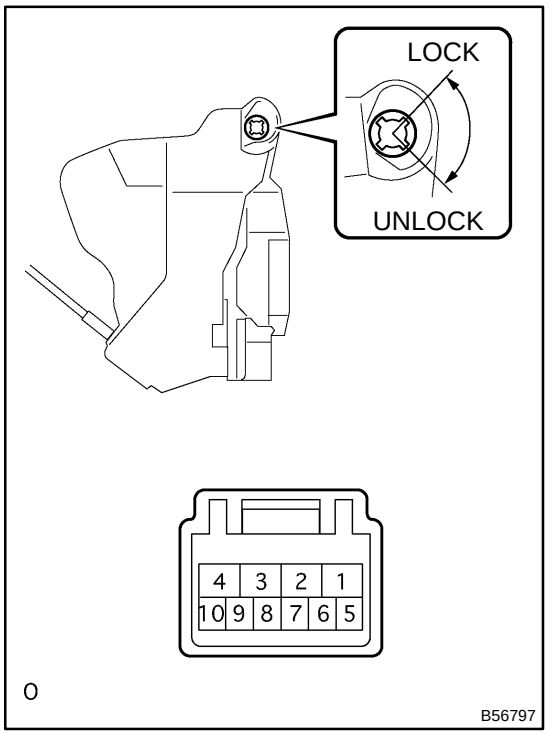

(b) Inspect the door lock and unlock switch continuity, as shown in the illustration and table.

Standard:

Terminal No.	Door lock position	Specified condition
7 ⇔ 9	Lock	Continuity
–	OFF	–
7 ⇔ 10	Unlock	Continuity

If the result is not as specified, replace the door lock assy.

(c) Inspect the position switch continuity, as shown in the illustration and table.

Standard:

Terminal No.	Door lock position	Specified condition
7 ⇔ 8	Lock	No continuity
–	OFF	–
7 ⇔ 9	Unlock	Continuity

If the result is not as specified, replace the door lock assy.

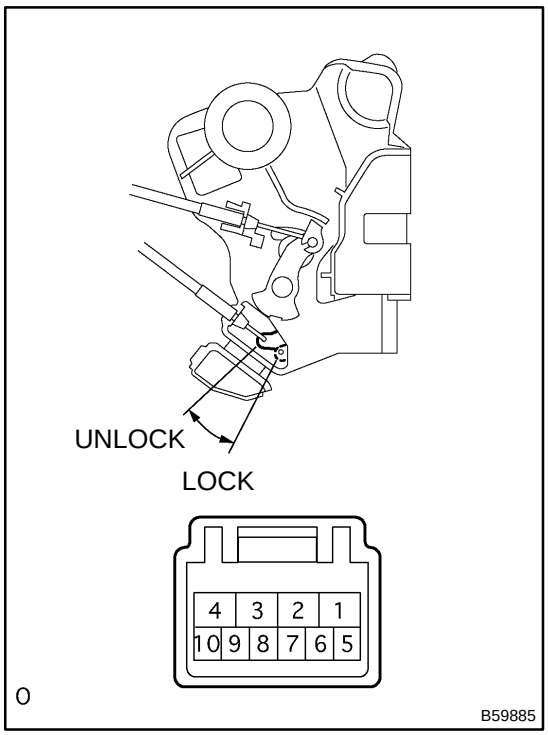

2. INSPECT FRONT DOOR LOCK ASSY RH

(a) Apply battery voltage and inspect the door lock motor operation, as show in the illustration and table.

Standard:

Measuring condition	Specified condition
Battery positive (+) Terminal – 4 Battery negative (–)– Terminal – 1	Lock
Battery positive (+) Terminal – 1 Battery negative (–) Terminal – 4	Unlock

If the result is not as specified, replace the door lock assy.

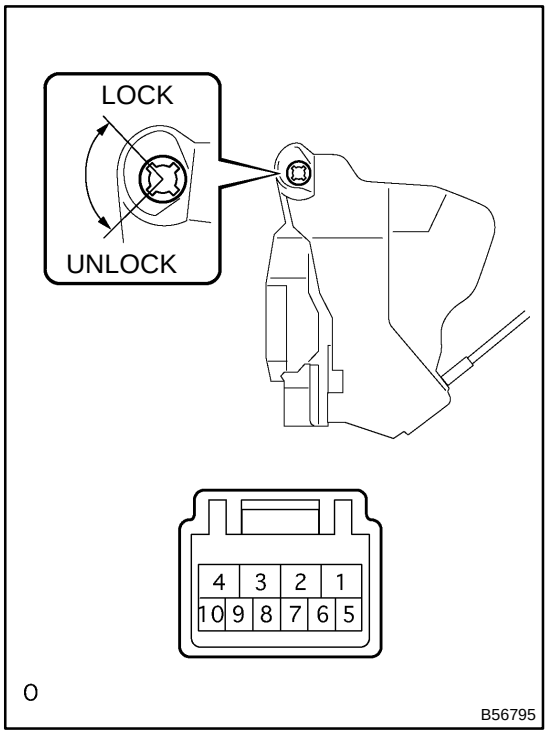

(b) Inspect the door lock and unlock switch continuity, as shown in the illustration and table.

Standard:

Terminal No.	Door lock position	Specified condition
6 ⇔ 8	Lock	Continuity
–	OFF	–
5 ⇔ 8	Unlock	Continuity

If the result is not as specified, replace the door lock assy.

(c) Inspect the position switch continuity, as shown in the illustration and table.

Standard:

Terminal No.	Door lock position	Specified condition
7 ⇔ 8	Lock	No continuity
–	OFF	–
7 ⇔ 8	Unlock	Continuity

If the result is not as specified, replace the door lock assy.

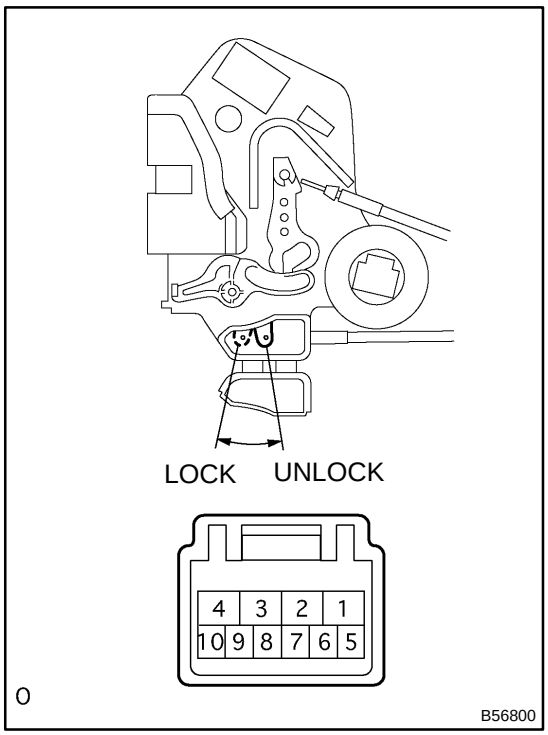

3. INSPECT REAR DOOR LOCK ASSY LH

(a) Apply battery voltage and inspect the door lock motor operation, as show in the illustration and table.

Standard:

Measuring condition	Specified condition
Battery positive (+) Terminal – 4 Battery negative (–) Terminal – 1	Lock
Battery positive (+) Terminal – 1 Battery negative (–) Terminal – 4	Unlock

If the result is not as specified, replace the door lock assy.

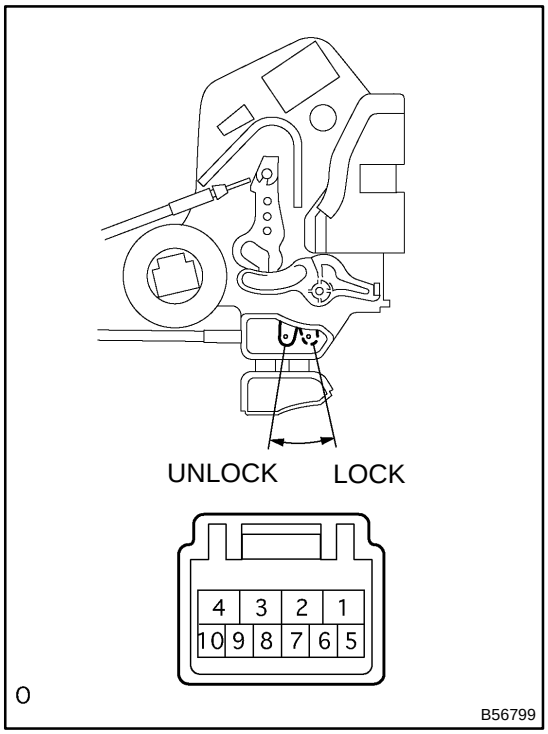

4. INSPECT REAR DOOR LOCK ASSY RH

(a) Apply battery voltage and inspect the door lock motor operation, as show in the illustration and table.

Standard:

Measuring condition	Specified condition
Battery positive (+) Terminal – 4 Battery negative (–) Terminal – 1	Lock
Battery positive (+) Terminal – 1 Battery negative (–) Terminal – 4	Unlock

If the result is not as specified, replace the door lock assy.

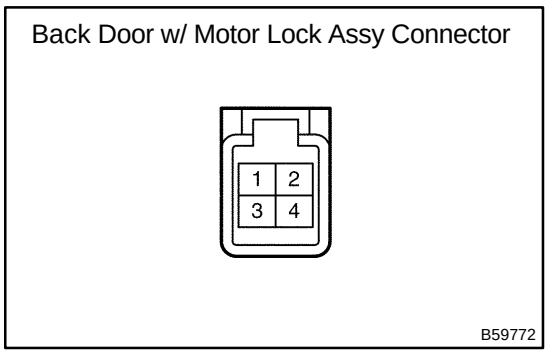

5. INSPECT BACK DOOR W/ MOTOR LOCK ASSY (BACK DOOR COURTESY SWITCH)

(a) Inspect the back door courtesy switch continuity, as shown in the illustration and table.

Standard:

Terminal No.	Door lock latch position	Specified condition
1 ⇔ 2	Open or half lock	Continuity
	Closed	No continuity

If the result is not as specified, replace the door lock assy.

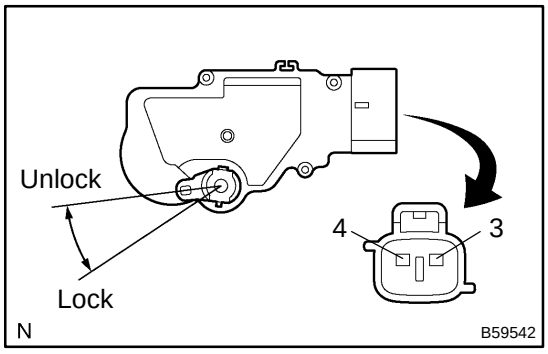

6. INSPECT BACK DOOR LOCK ACTUATOR ASSY

(a) Apply battery voltage and inspect the back door lock actuator assy operation, as show in the illustration and table.

Standard:

Measuring condition	Specified condition
Battery positive (+) Terminal – 4 Battery negative (–) Terminal – 3	Lock
Battery positive (+) Terminal – 3 Battery negative (–) Terminal – 4	Unlock

If the result is not as specified, replace the actuator.

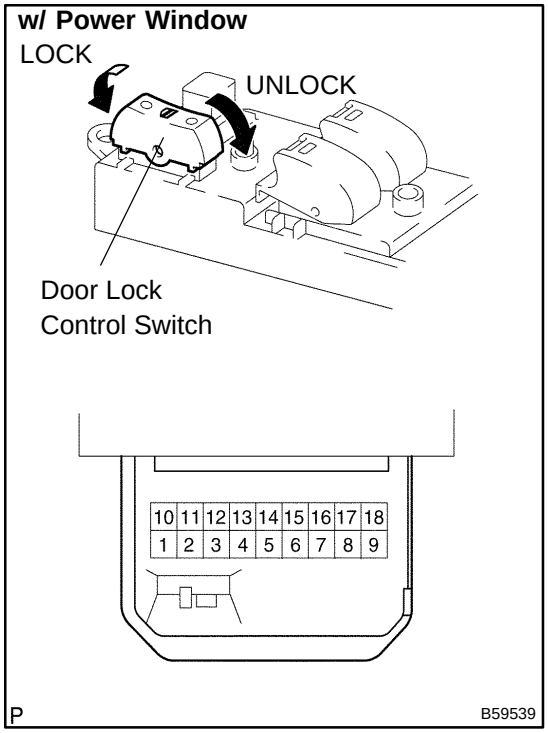

7. INSPECT POWER WINDOW REGULATOR MASTER SWITCH ASSY

(a) w/ Power window:

Inspect the door lock control switch continuity, as show in the illustration and table.

Standard:

Terminal No.	Switch position	Specified condition
1 ⇔ 3 ⇔ 5	Lock	Continuity
–	OFF	No continuity
1 ⇔ 3 ⇔ 8	Unlock	Continuity

If the result is not as specified, replace the switch.

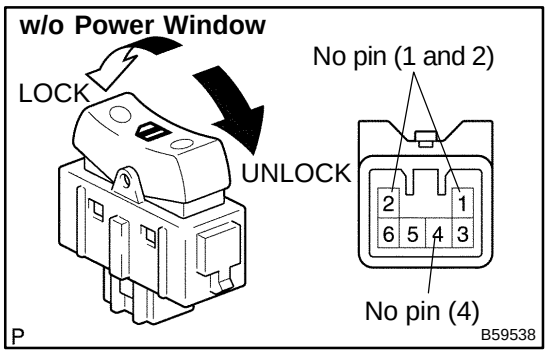

(b) w/o Power window:
Inspect the door lock control switch continuity, as shown in the illustration and table.
Standard:

Terminal No.	Switch position	Specified condition
3 ⇔ 6	Lock	Continuity
–	OFF	No continuity
3 ⇔ 5	Unlock	Continuity

If the result is not as specified, replace the switch.

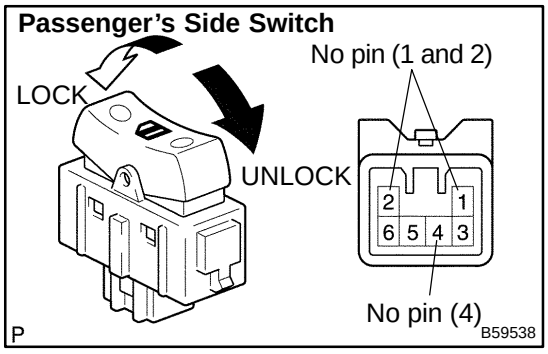

8. INSPECT DOOR CONTROL SWITCH ASSY

(a) Passenger's side switch:
Inspect the door lock control switch continuity, as shown in the illustration and table.
Standard:

Terminal No.	Switch position	Specified condition
3 ⇔ 6	Lock	Continuity
–	OFF	No continuity
3 ⇔ 5	Unlock	Continuity

If the result is not as specified, replace the switch.

POWER DOOR LOCK CONTROL SYSTEM

730BC–01

ON–VEHICLE INSPECTION

1. INSPECT FOR ELECTRICAL DOOR LOCK OPERATION

HINT:

- w/ Power window:
  The door control switch is built in the master switch in the driver's door and also in the passenger's door.
- w/o Power window:
  The door control switch is in the driver's door and also in the passenger's door.

(a) Check the basic function.

(1) Check that all the doors will lock when the door control switch (for manual operation) is turned to the lock side and all the doors will unlock when turned to the unlock side.

(2) Check that all the doors will lock when the driver's door lock key cylinder is turned to the lock side with the key.

(3) Check that all the doors will lock when the passenger's door lock key cylinder is turned to the lock side with the key.

(4) Check that only the driver's door will unlock when the driver's door lock key cylinder is turned to the unlock side and all the doors will unlock when turned to the unlock side once again within 3 seconds from the first unlocking operation, with the key (2–step unlocking function).

HINT:

The 2–step unlocking function is applicable to the driver's door lock key cylinder only.

(5) Check that all the doors will unlock when the passenger's door lock key cylinder is turned to the unlock side once with the key.

(b) Check the key confinement prevention function.

NOTICE:

In order to prevent the key from being confined, the inspection should be performed with the driver's door glass open.

(1) Insert the ignition key into the ignition key cylinder.

(2) With the driver's door open, check all the doors will immediately unlock when the door lock knob for the driver's door is turned to the lock side.

(3) With the driver's door open, check all the doors will immediately unlock when the door control switch (for manual operation) is turned to the lock side.

(4) With the driver's door open, lock the driver's door by holding the driver's door lock knob in the lock side for 2 seconds or more, and then close the driver's door. At this time, check that all the doors will unlock.

(c) Check the security function.

(1) Close all the doors with the driver's door glass open so that the door control switch (for manual operation) can be operated from the outside of the vehicle.

(2) Pull out the ignition key, open the driver's door, and close and lock the door with the door control switch (for manual operation). Under this condition, check that all the doors will not unlock when the door control switch (for manual operation) is turned to the unlock side from the outside of the vehicle.

(3) Pull out the ignition key, close and lock the driver's door by the key operation. Under this condition, check that all the doors will not unlock when the door control switch (for manual operation) is turned to the unlock side from the outside of the vehicle.

(4) Pull out the ignition key, close the driver's door and lock the door by the wireless door lock operation. Under this condition, check that all the doors will not unlock when the door control switch (for manual operation) is turned to the unlock side from the outside of the vehicle.

(5) Check that the security function will cancel when either of the following conditions is satisfied.
- The ignition switch turned ON
- The driver's door unlocked by the key operation
- The door control switch (for manual operation) turned to the unlock side after unlocking the door control knob manually
- The doors unlocked by the wireless operation (for wireless door lock models)

(d) Check the illuminated entry function.

(1) Check that the dome light, ignition switch light and rear room light will light up when opening any of the doors and fade out in 15 seconds after closing the door.

(2) Check that the dome light, ignition switch light and rear room light will fade out immediately when either of the following conditions is satisfied.
- All the doors closed and locked
- All the doors closed and the ignition switch turned ON or ACC

730BG–01

INSPECTION

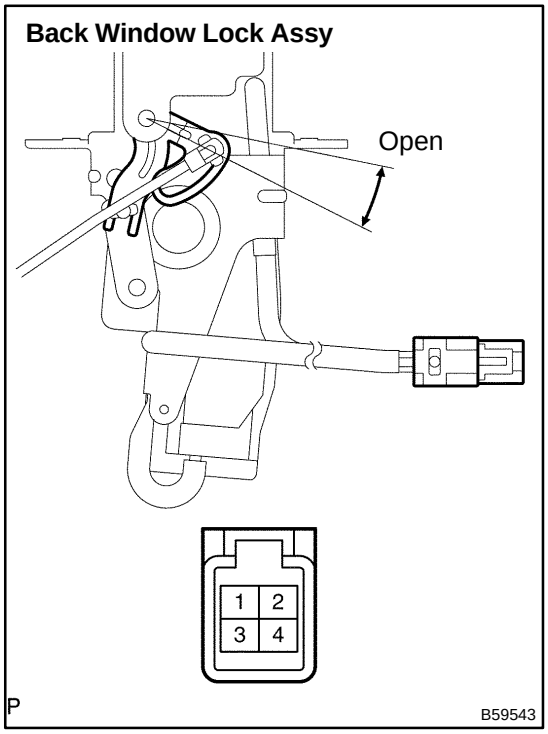

1. INSPECT BACK WINDOW LOCK ASSY

(a) Apply battery voltage and inspect the window lock motor operation, as show in the illustration and table.

Standard:

Measuring condition	Specified condition
Battery positive (+) Terminal – 4 Battery negative (–) Terminal – 3	Open

If the result is not as specified, replace the window lock assy.

(b) Inspect the courtesy switch.

Standard:

Terminal No.	Door lock latch position	Specified condition
1 ⇔ 2	Open or half lock	Continuity
	Closed	No continuity

If the result is not as specified, replace the window lock assy.

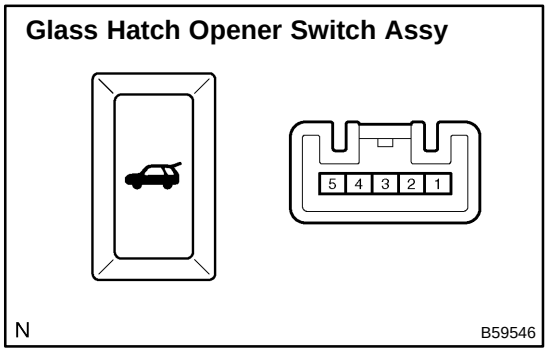

2. INSPECT GLASS HATCH OPENER SWITCH ASSY

(a) Inspect the switch continuity, as show in the illustration and table.

Standard:

Terminal No.	Switch position	Specified condition
1 ⇔ 3	Free	Continuity
2 ⇔ 3	Push	

If the result is not as specified, replace the switch assy.

GLASS HATCH OPENER SYSTEM

730BE–01

ON–VEHICLE INSPECTION

1. INSPECT GLASS HATCH OPENER SYSTEM (Switch operation)

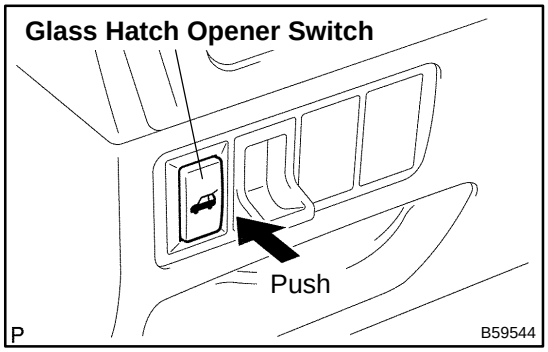

(a) With the ignition switch ON, check that the glass hatch will open when the glass hatch opener switch is pushed.

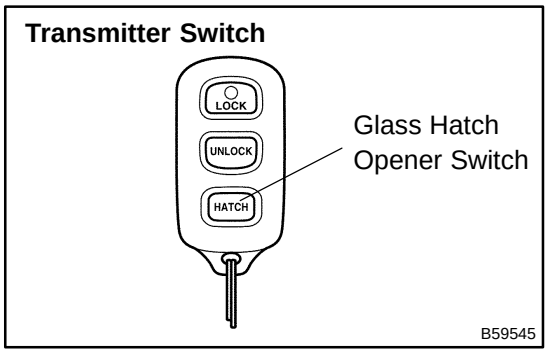

(b) Check that the glass hatch will open when the glass hatch opener switch on the transmitter has been pushed for 0.8 seconds or more.

2. INSPECT GLASS HATCH OPENER SYSTEM (Key cylinder operation)

HINT:

The back door lock/unlock and glass hatch opener are linked together in the back door key cylinder. The back door can be locked or unlocked, and also the glass hatch can be opened in this key cylinder alone.

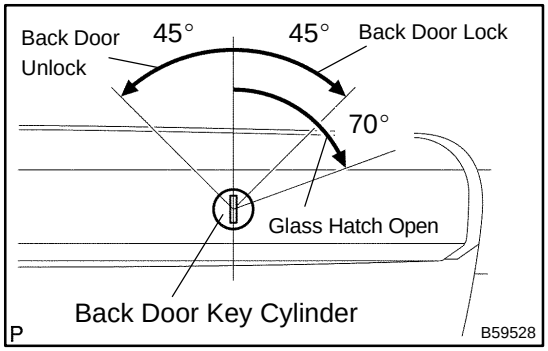

(a) Check that the back door will lock when the key is turned clockwise by approximately 45° and the back door will unlock when turned fully counterclockwise by approximately 45°, as shown in the illustration.

(b) Check that the glass hatch will open when the key is turned fully clockwise by approximately 70° farther than the back door lock position (approximately 45°), as shown in the illustration.

HINT:

The glass hatch opener can operate even while the back door is open.

730BF–01

LOCATION

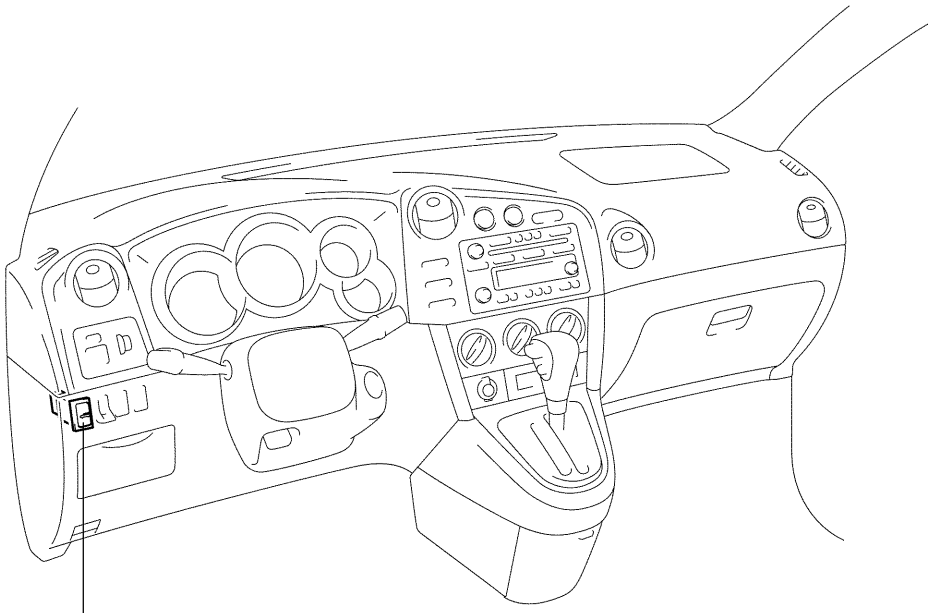

Glass Hatch Opener Switch Assy

Back Window Lock Assy

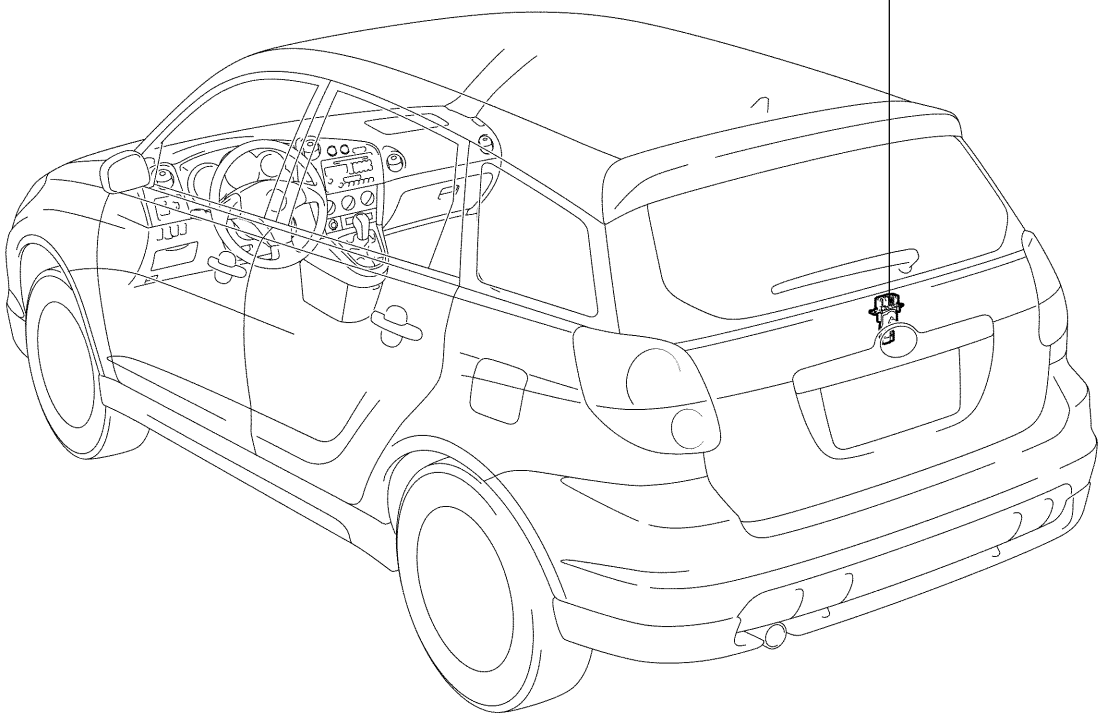

P

B59156

7405X–01

INSPECTION

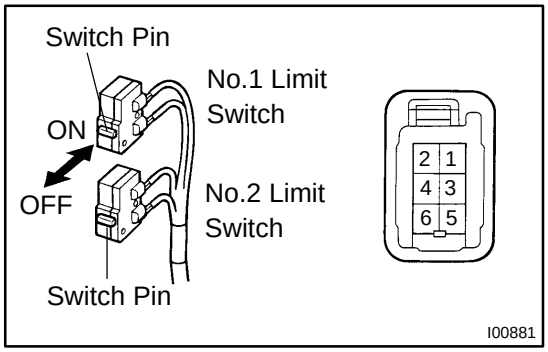

1. INSPECT SLIDING ROOF LIMIT SWITCH

(a) Inspect the sliding roof limit switch continuity.

Standard:

Switch position	Terminal No.	Specified condition
No.1 limit switch OFF (SW pin released)	4 – 5	No continuity
No.1 limit switch ON (SW pin pushed)	4 – 5	Continuity
No.2 limit switch OFF (SW pin released)	4 – 6	No continuity
No.2 limit switch ON (SW pin pushed)	4 – 6	Continuity

If the result is not as specified, replace the sliding roof drive motor.

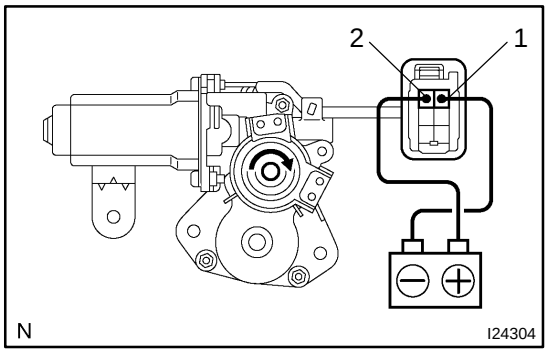

2. INSPECT SLIDING ROOF DRIVE GEAR SUB–ASSY

(a) Connect the positive (+) lead from the battery to terminal 2 and the negative (–) lead to terminal 1, and check that the motor turns clockwise (moves to the close side).

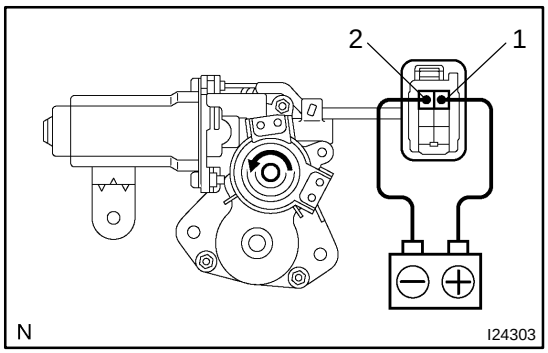

(b) Reverse the polarity, check that the motor turns counterclockwise (moves to the open side).

If the result is not as specified, replace the motor.

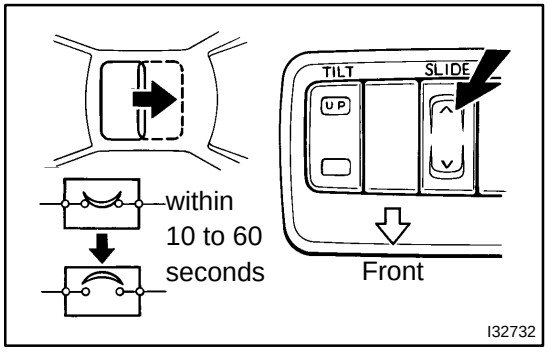

3. INSPECT SLIDING ROOF MOTOR CIRCUIT BREAKER

(a) With the sliding roof in the fully opened position, hold the sliding roof switch in the ”OPEN” side and check that there is circuit breaker operating noise within 10 to 60 seconds.

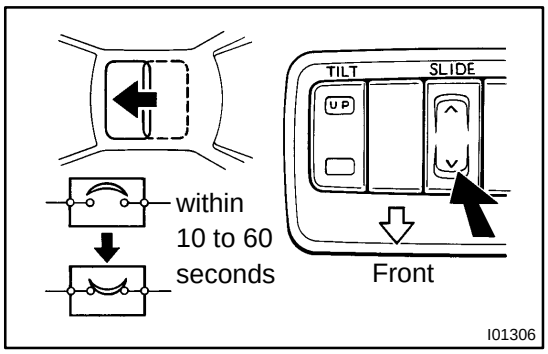

(b) With the sliding roof in the fully opened position, hold the sliding roof switch in the ”CLOSE” side and check that the sliding roof begins to close within 60 seconds.

If the result is not as specified, replace the motor.

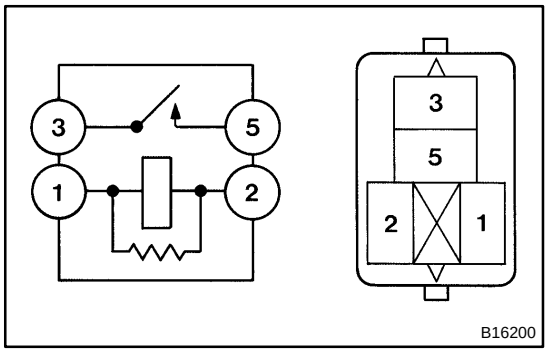

4. INSPECT RELAY (Making: P/W)

(a) Remove the power window relay from the instrument panel J/B.

(b) Inspect the power window relay.

Standard:

Terminal No.	Condition	Specified condition
1 ⇔ 2	Constant	Continuity
3 ⇔ 5	Apply battery voltage between terminals 1 and 2	Continuity

If the result is not as specified, replace the relay.

7405V–01

ON–VEHICLE INSPECTION

1. INSPECT SLIDING ROOF FUNCTION

(a) Check the slide opening operation (Manual).
  (1) Turn the ignition switch ON.
  (2) When keeping operating the sliding roof switch to the OPEN side, check that the roof glass will slide and be fully opened.

(b) Check the slide closing operation (Manual).
  (1) Turn the ignition switch ON.
  (2) When keeping operating the slide roof switch to CLOSE side, check that the roof glass will slide but stop halfway.
  (3) When operating the sliding roof switch to the CLOSE side again after the above operation, check that the roof glass will slide again from the halfway position and be fully closed.

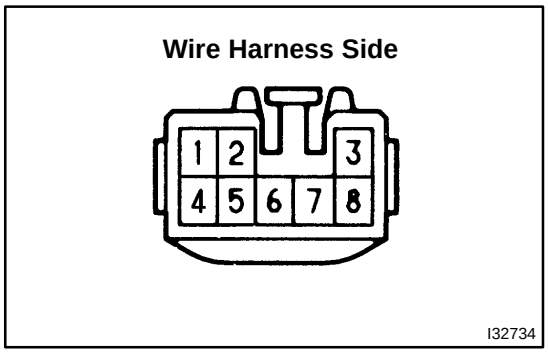

2. INSPECT SLIDING ROOF CONTROL RELAY

(a) Disconnect the connector from the relay and switch, and inspect the connector on the wire harness side, as shown in the chart.

Terminal No.	Condition	Specified condition
4 – 5	Constant	Continuity
8 – Body ground	Constant	Continuity
6 – Body ground	No.1 limit switch OFF (Sliding roof closed)	No continuity
6 – Body ground	No.1 limit switch ON (Sliding roof closed)	Continuity
7 – Body ground	No.2 limit switch OFF (Sliding roof tilted up open approx. 200 mm (7.87 in.))	No continuity
7 – Body ground	No.2 limit switch ON (Except for conditions mentioned above)	Continuity
2 – Body ground	Ignition switch LOCK or ACC	* No voltage
2 – Body ground	Ignition switch ON	Battery positive voltage

*Exceptions:

For 60 seconds after the ignition switch ON → OFF (ACC) or until driver or passenger door is opened after the ignition switch ON → OFF (ACC).

If the result is not as specified, replace the relay.

SLIDING ROOF SYSTEM

LOCATION

7405U–01

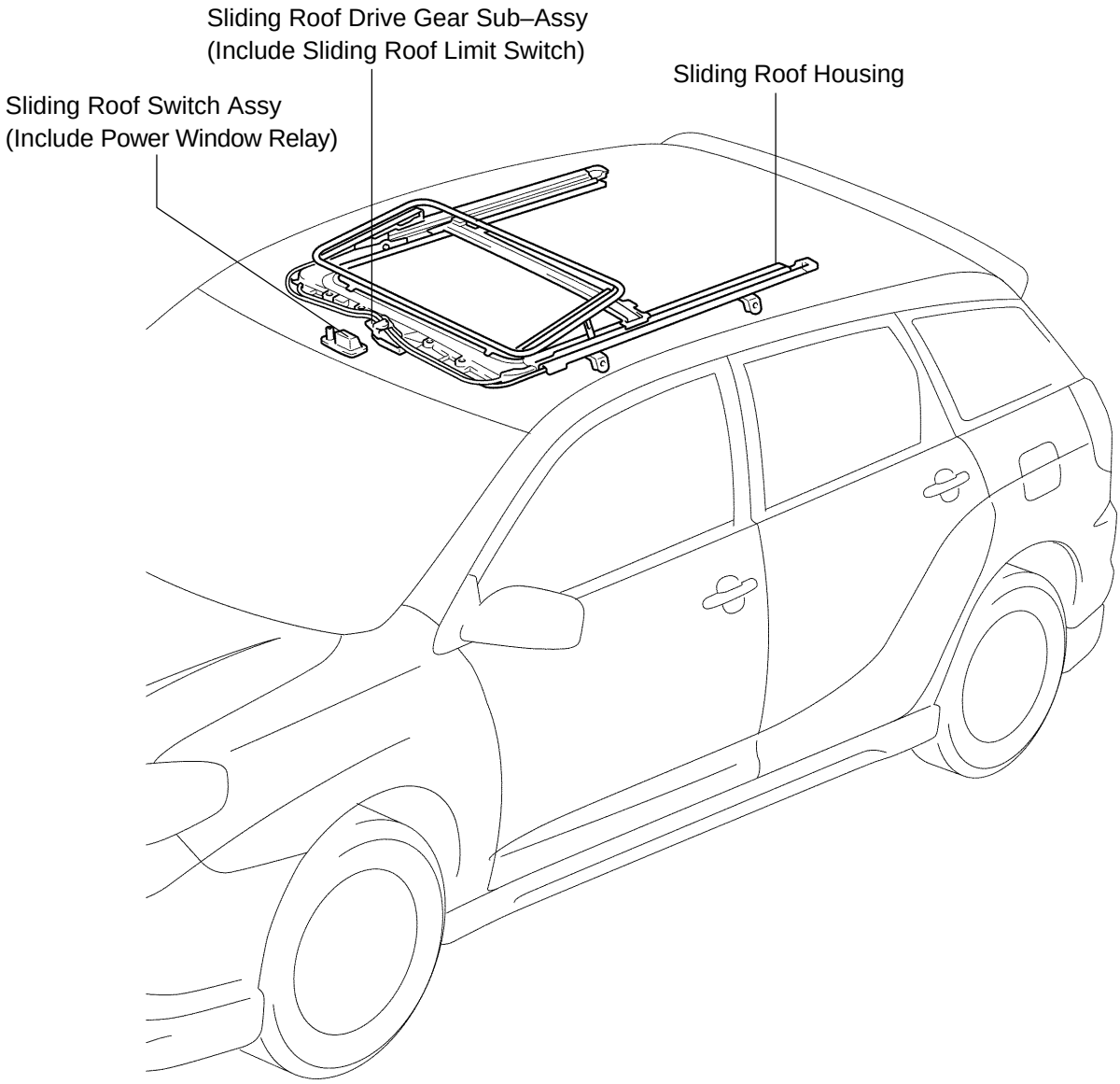

P

A65610

7405W–01

PROBLEM SYMPTOMS TABLE

Symptom	Suspected Area	See page
Sliding roof system dose not operate	5. P/W relay	–
	6. GAUGE fuse	–
	7. IG1 relay	–
	8. Sliding roof switch	74–4
	9. Sliding roof limit switch	74–4
	10. Sliding roof drive gear	74–4
	11. Faulty sliding of sliding roof	–
	12. Wire harness	–
Sliding roof system stops operation halfway (Foreign material, such as a stone, is trapped in motor assembly)	1. Sliding roof switch	74–4
	2. Sliding roof limit switch	74–4
	3. Sliding roof drive gear	74–4
	4. IG1 relay	–
	5. Wire harness	–

SLIDING ROOF

COMPONENTS

7405Y–01

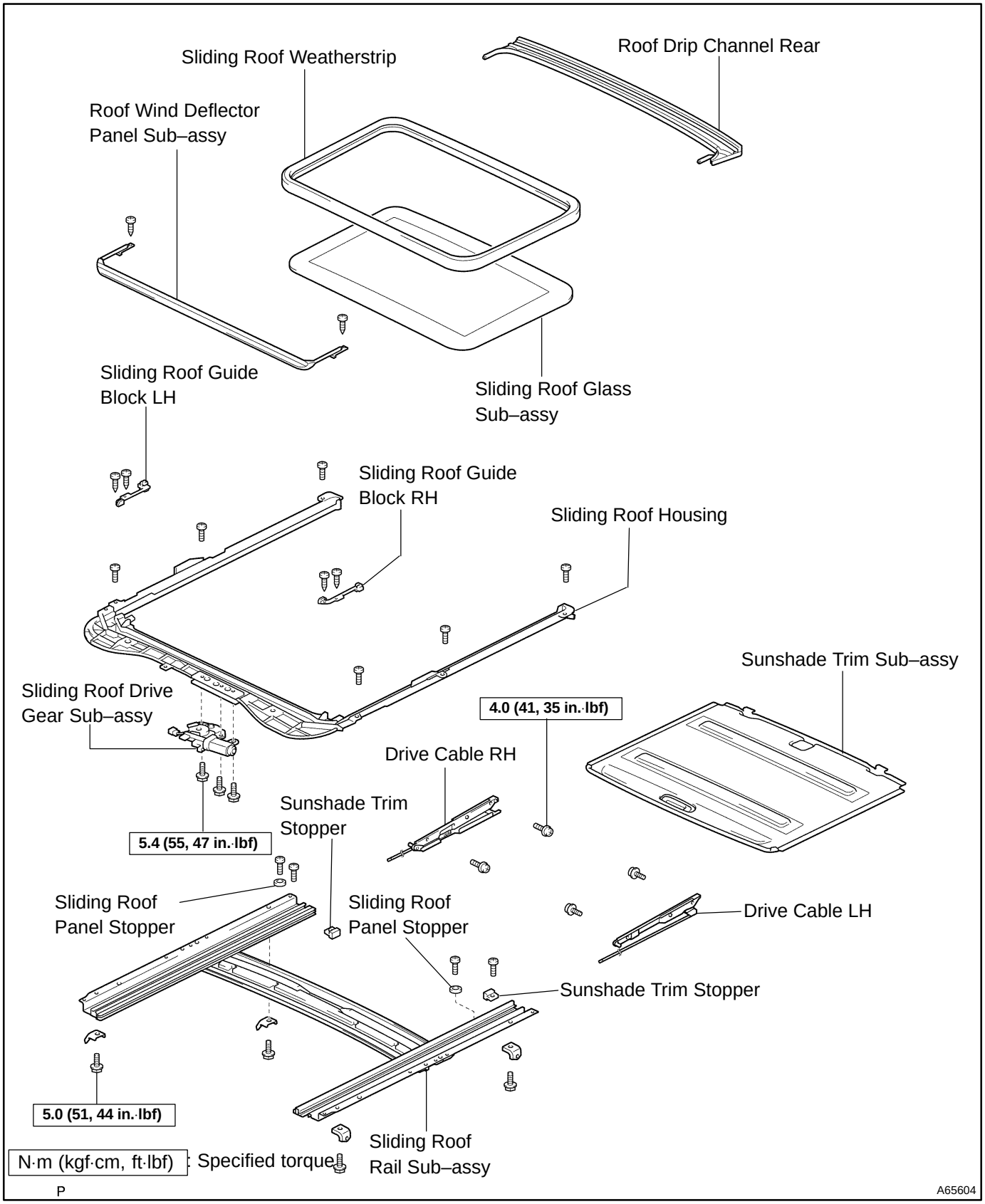

7405Z–01

REPLACEMENT

1. REMOVE ROOF HEADLINING ASSY (See page 76–17)

2. REMOVE SLIDING ROOF GLASS SUB–ASSY

(a) Using a torx wrench (T25), remove the 4 screws the sliding roof glass.

(b) Pull the glass upward to remove it.

3. REMOVE SLIDING ROOF WEATHERSTRIP

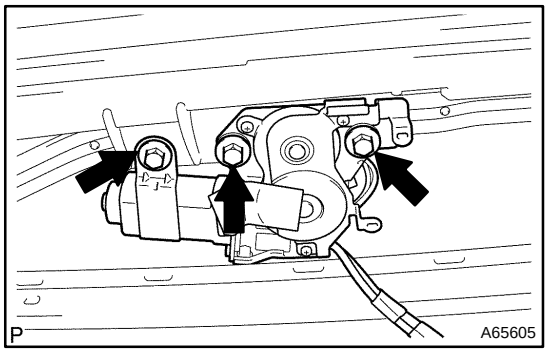

4. REMOVE SLIDING ROOF DRIVE GEAR SUB–ASSY

NOTICE:

Remove the drive gear with the sliding roof fully closed.

(a) Disconnect the connector.

(b) Remove the 3 bolts and drive gear.

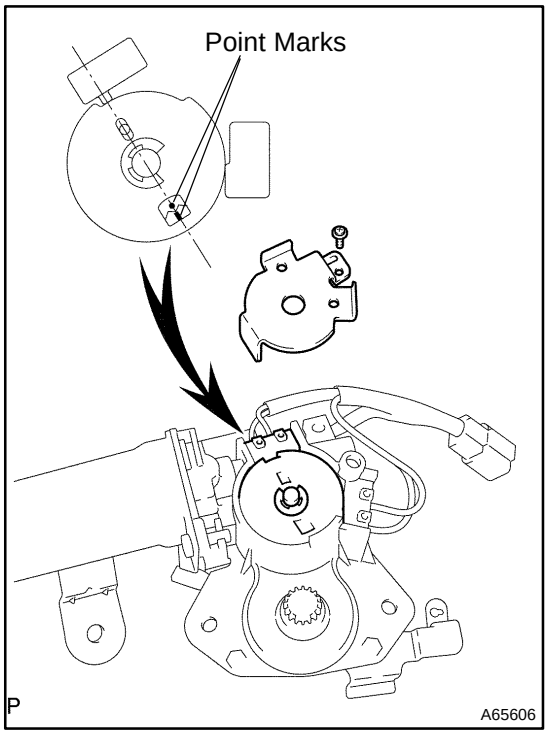

(c) Remove the screw and cam plate cover.

(d) Turn the drive gear to align the point marks, as shown in the illustration.

(e) Install the cam plate cover and screw.

NOTICE:

At the time of installation, if the sliding roof position and drive gear fully closed position are not aligned, the sliding roof does not operate normally.

5. REMOVE SLIDING ROOF HOUSING ASSY

(a) Disconnect the 4 drain hoses from the housing.
(b) Remove the 8 bolts and 4 brackets.
(c) Remove the 6 nuts and housing.

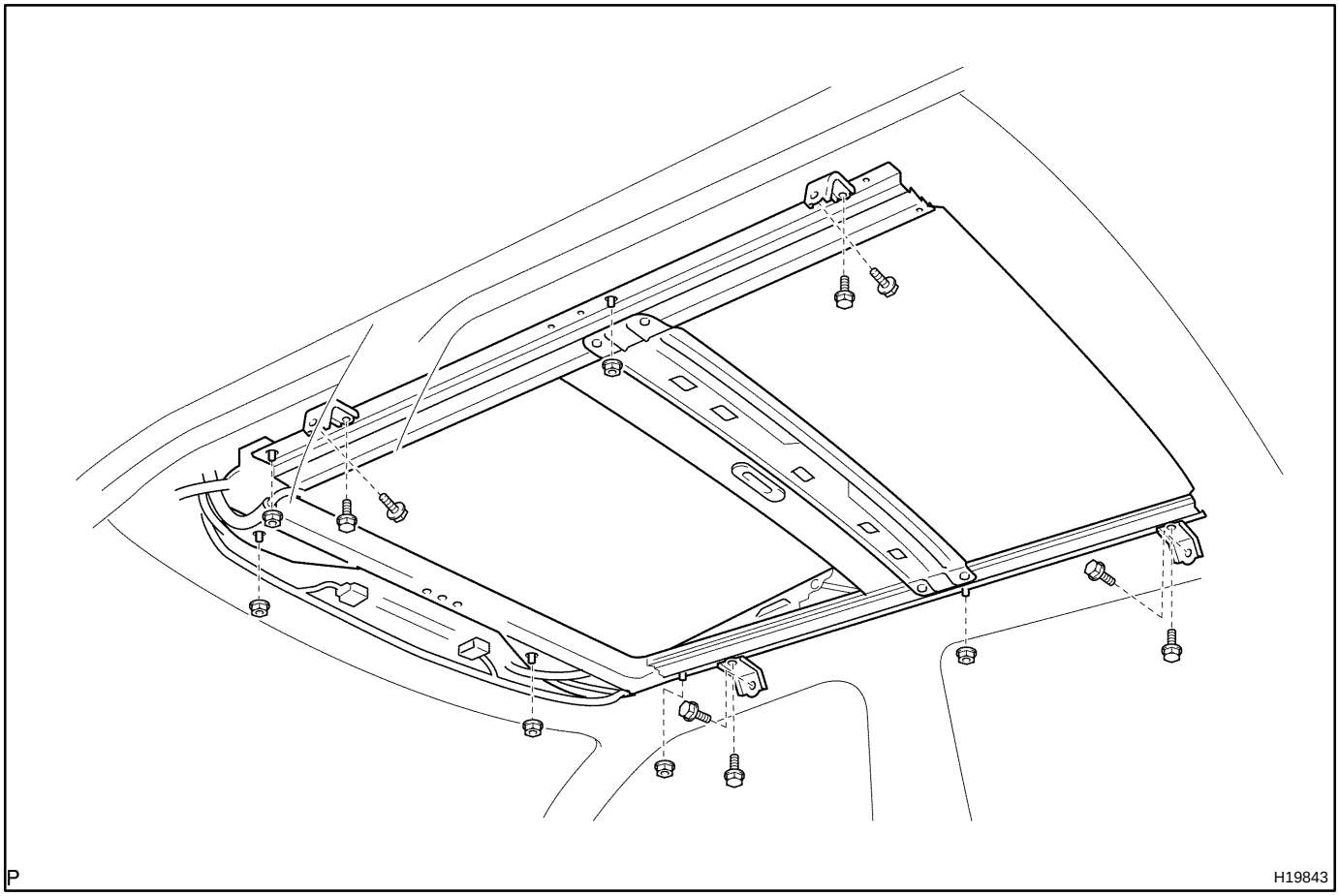

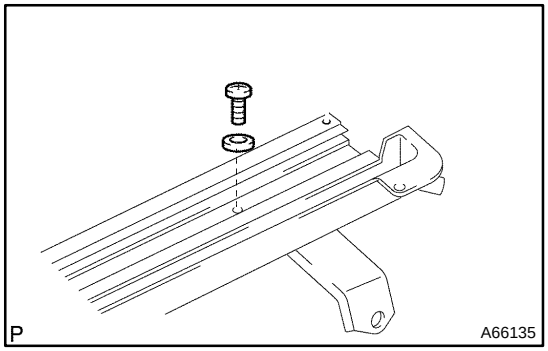

6. REMOVE SLIDING ROOF PANEL STOPPER

(a) Remove the 2 screws and 2 stoppers.

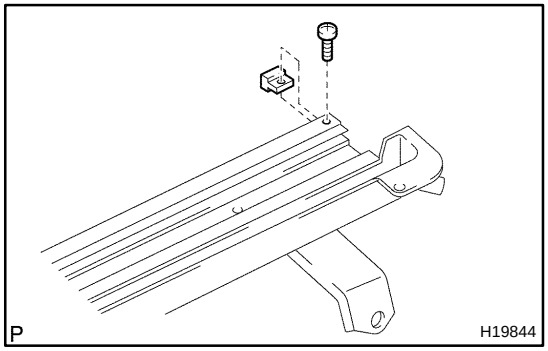

7. REMOVE SUNSHADE TRIM SUB–ASSY

(a) Remove the 2 screws and 2 stoppers.
(b) Sliding the sunshade trim backward, remove it.

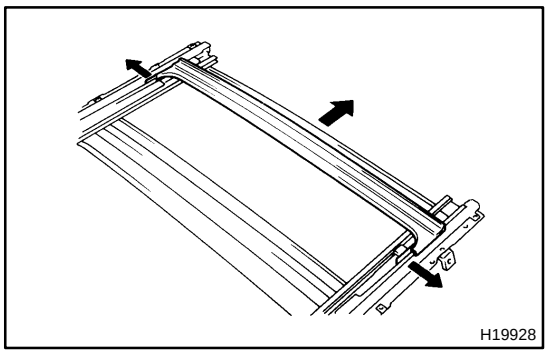

8. REMOVE ROOF DRIP CHANNEL REAR

(a) Remove the roof drip channel rear as shown in the illustration.

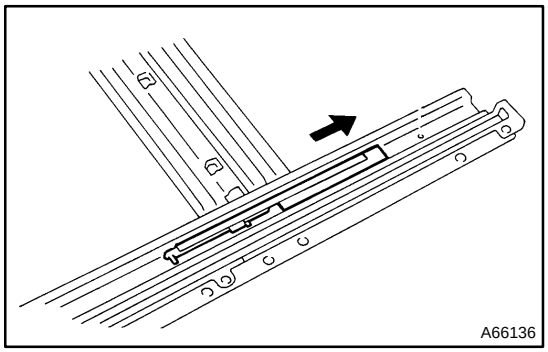

9. REMOVE SLIDING ROOF DRIVE CABLE LH

(a) Sliding the drive cable backward, remove it.

10. REMOVE SLIDING ROOF DRIVE CABLE RH

(a) Sliding the drive cable backward, remove it.

11. REMOVE ROOF WIND DEFLECTOR PANEL SUB–ASSY

(a) Remove the 2 screws and roof wind deflector panel.

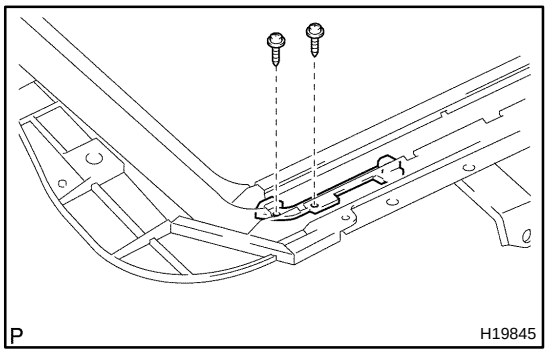

12. REMOVE SLIDING ROOF GUIDE BLOCK LH

(a) Remove the 2 screws and guide block.

13. REMOVE SLIDING ROOF GUIDE BLOCK RH

(a) Remove the 2 screws and guide block.

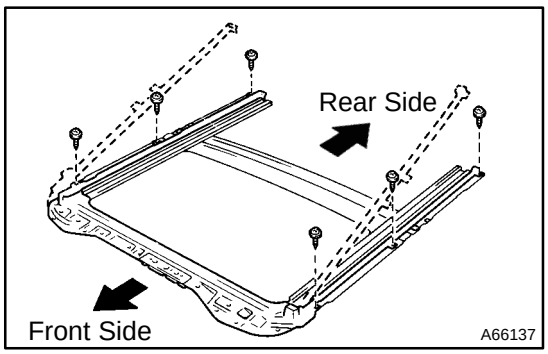

14. REMOVE SLIDE ROOF RAIL SUB–ASSY

(a) Remove the 6 screws and sliding roof housing.

15. INSTALL SLIDE ROOF RAIL SUB–ASSY

(a) Install the sliding roof housing with the 6 screws.

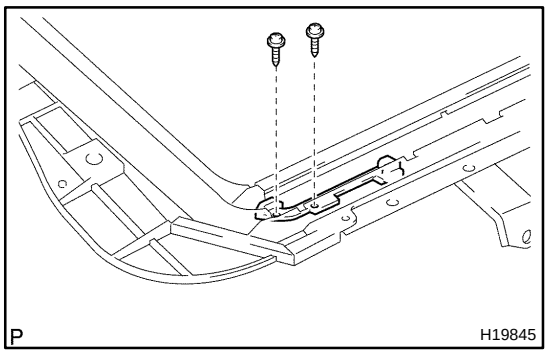

16. INSTALL SLIDING ROOF GUIDE BLOCK LH

(a) Install the guide block with the 2 screws.

17. INSTALL SLIDING ROOF GUIDE BLOCK RH

(a) Install the guide block with the 2 screws.

18. INSTALL ROOF WIND DEFLECTOR PANEL SUB–ASSY

(a) Install the roof deflector panel with the 2 screws.

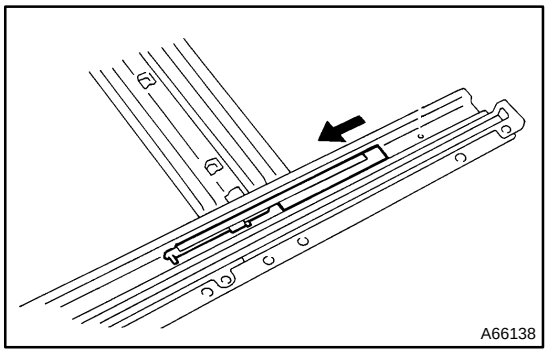

19. INSTALL SLIDING ROOF DRIVE CABLE LH

(a) Sliding the drive cable forward, install it.

20. INSTALL SLIDING ROOF DRIVE CABLE RH

(a) Sliding the drive cable forward, install it.

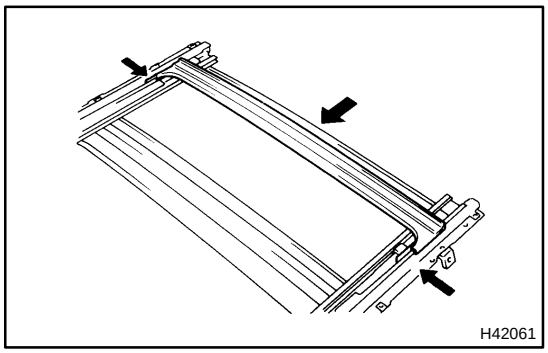

21. INSTALL ROOF DRIP CHANNEL REAR

(a) Install the roof drip channel rear, as shown in the illustration.

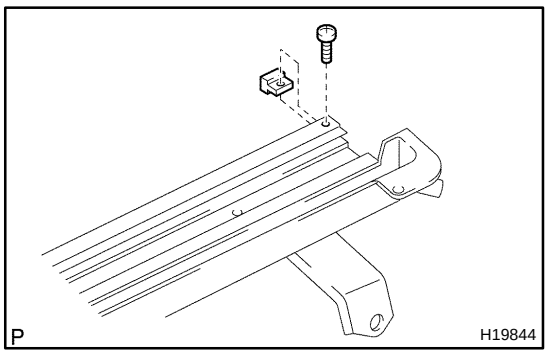

22. INSTALL SUNSHADE TRIM SUB–ASSY

(a) Install the 2 stopper with the 2 screws.

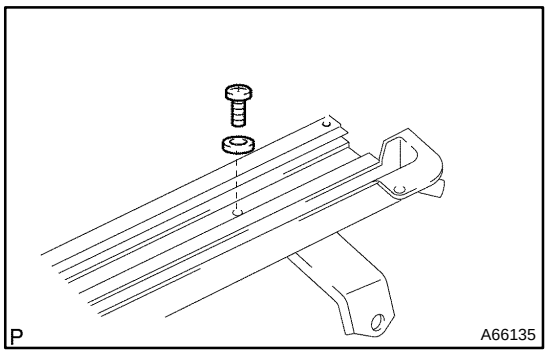

23. INSTALL SLIDING ROOF PANEL STOPPER

(a) Install the 2 stoppers with the 2 screws.

24. INSTALL SLIDING ROOF HOUSING ASSY

(a) Install the housing with the 6 nuts.
Torque: 5.5 N·m (56 kgf·cm, 49 in.·lbf)

(b) Install the 4 brackets with the 8 bolts.
Torque: 5.0 N·m (51 kgf·cm, 44 in.·lbf)

(c) Connect the 4 drain hoses to the housing.

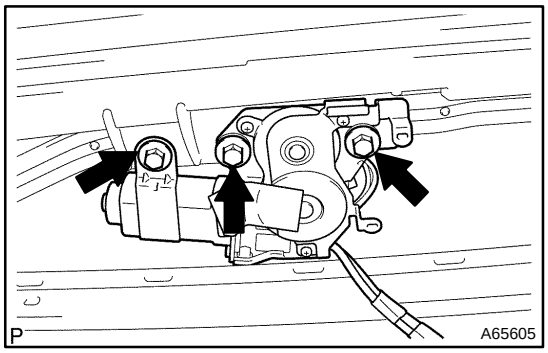

25. INSTALL SLIDING ROOF DRIVE GEAR SUB–ASSY

(a) Install the drive gear with the 3 bolts.
Torque: 5.4 N·m (55 kgf·cm, 48 in.·lbf)

(b) Connect the connector.

26. INSTALL SLIDING ROOF WEATHERSTRIP

27. INSTALL SLIDING ROOF GLASS SUB–ASSY

(a) Using a torx wrench (T25), install the sliding roof glass with the 4 screws.
Torque: 4.0 N·m(41 kgf·cm, 35 in.·lbf)

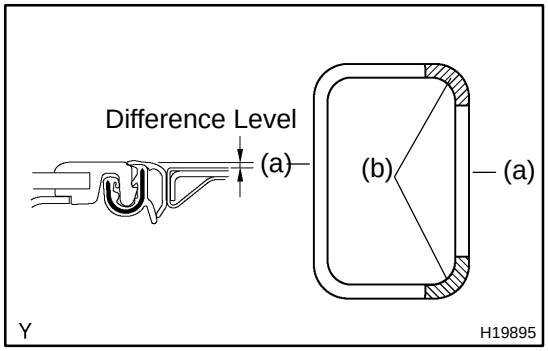

(b) Check the difference in level between the sliding roof weatherstrip and roof panel.
Standard:

Difference in level	Specification
Place (a)	0 + 1.5 mm (0 ± 0.059 in.)
Place (b)	0 + 1.5 mm (0 + 0.059 in.) 0 – 1.0 mm (0 – 0.039 in.)

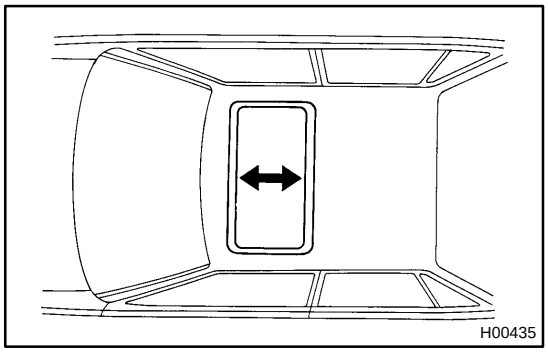

28. INSPECT SLIDING ROOF GLASS SUB–ASSY

(a) Using a torx wrench (T25), loosen the sliding roof glass installation screws.

(b) Adjust the sliding roof glass forward and backward.

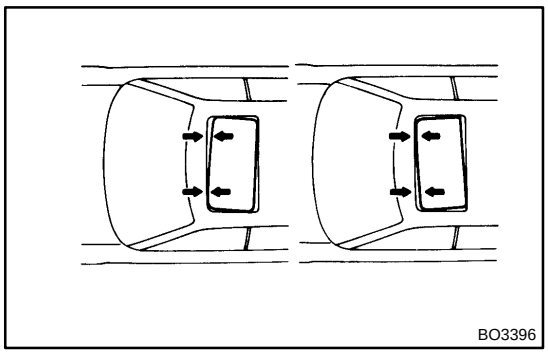

(c) When the front or rear alignment is not correct, remove the drive gear and sliding roof glass, then adjust the drive rail.

NOTICE:

Remove the drive gear with the sliding roof fully closed.

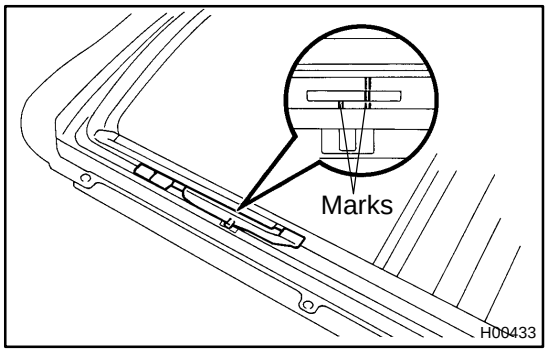

(d) Adjust the roof rail by sliding the cable forward or backward to align the 2 marks, as shown in the illustration.

(e) Install the drive gear and sliding roof glass.

29. INSPECT FOR LEAK

(a) Adjusting the sliding roof, check there is no water leak.

(b) In case of water leak, readjust the sliding roof.

30. INSTALL ROOF HEADLINING ASSY (See page 76–17)

750DO–01

ADJUSTMENT

HINT:

- In the RH side, work in the same procedure as in the LH side.
- Since the centering bolt is used as a door side hinge bolt, the door hinge cannot be adjusted with it on. Substitute the bolt with washer for the centering bolt.

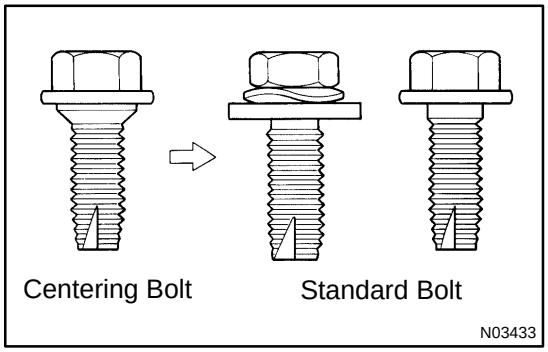

1. INSPECT FRONT DOOR PANEL SUB–ASSY LH

(a) Check that the clearance is within the standard value.

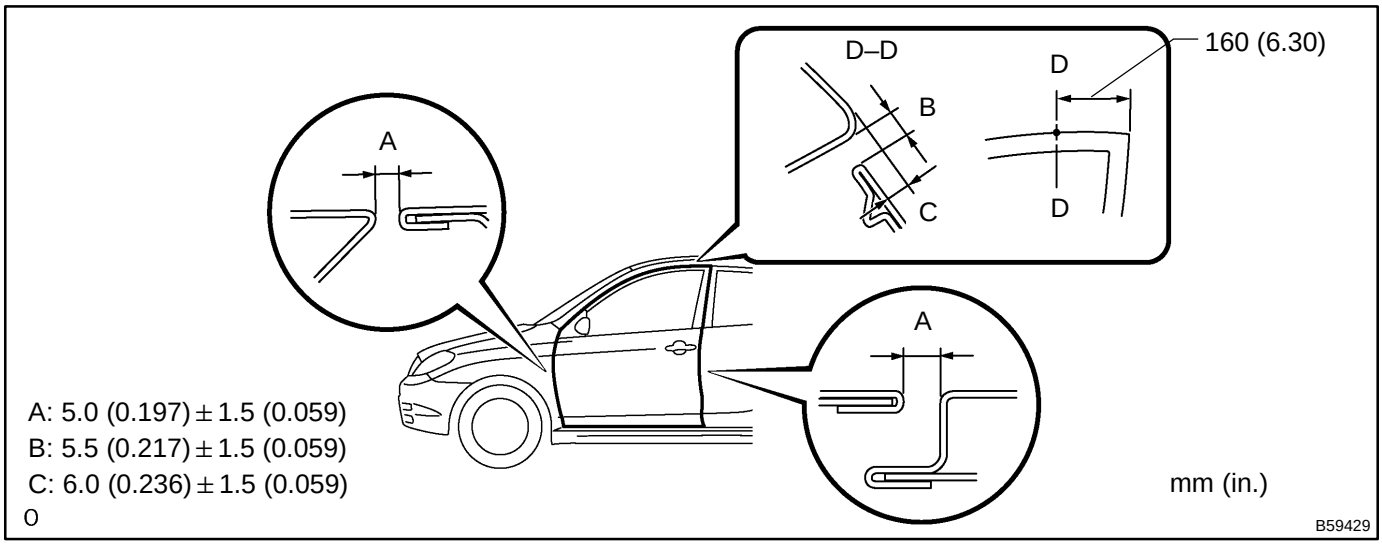

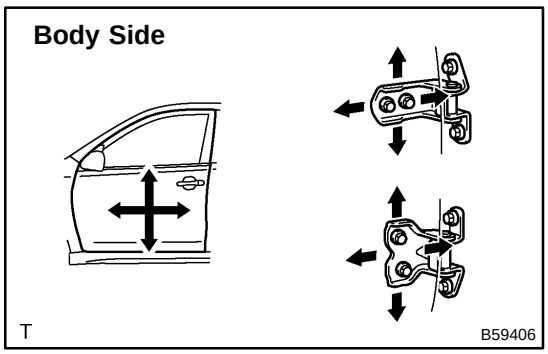

2. ADJUST FRONT DOOR PANEL SUB–ASSY LH

(a) Adjust the door in the forward/rearward and the vertical direction.

(1) Using SST, adjust the door by loosening the body side hinge bolts.

SST 09812–00010

Torque: 26 N·m (265 kgf·cm, 19 ft·lbf)

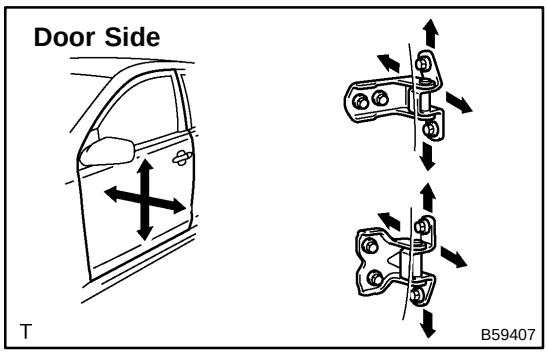

(b) Adjust the door in the inner/outer and the vertical direction.
   (1) Adjust the door by loosening the door side hinge bolts.

Torque: 26 N·m (265 kgf·cm, 19 ft·lbf)

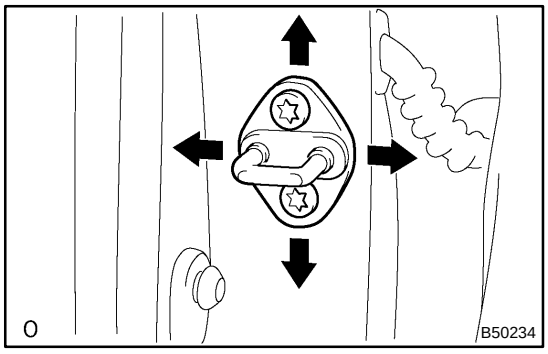

(c) Adjust the striker position by slightly loosening the striker mounting screws, and hitting the striker with a plastic–faced hammer.

(d) Tighten the striker mounting screws again.

Torque: 23 N·m (235 kgf·cm, 17 ft·lbf)

FRONT DOOR

COMPONENTS

750DM–01

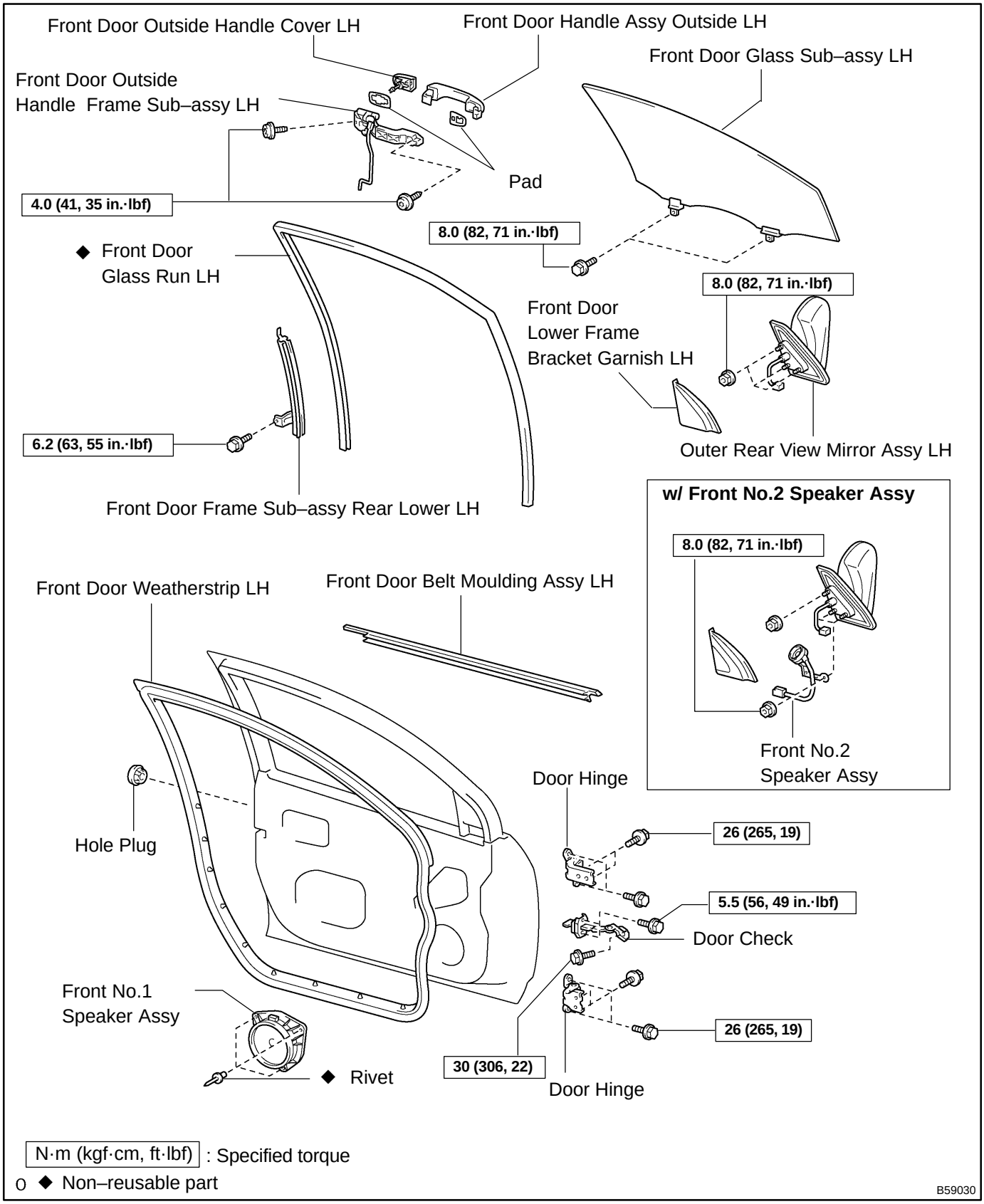

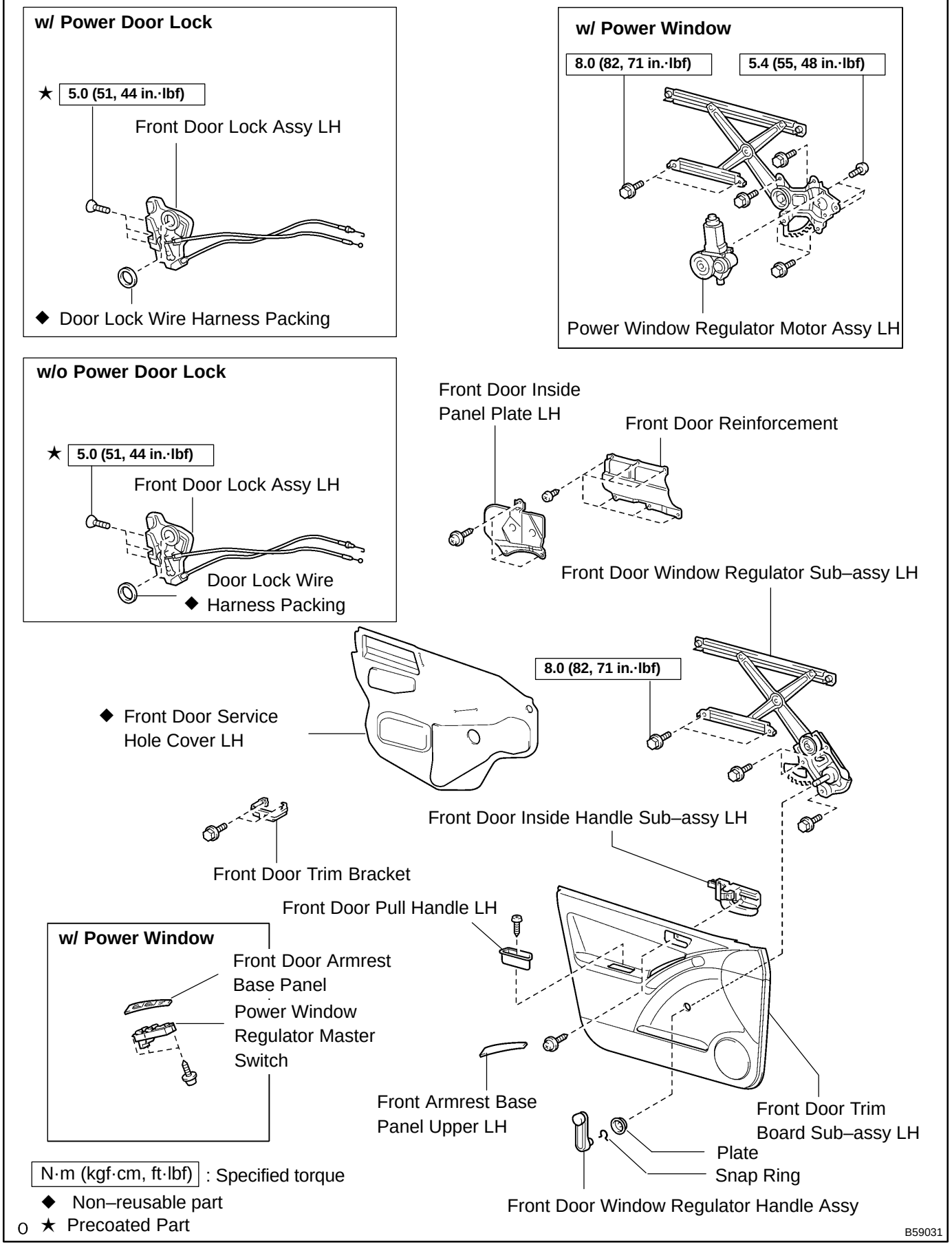
w/ Power Door Lock
★ 5.0 (51, 44 in.·lbf)
Front Door Lock Assy LH
◆ Door Lock Wire Harness Packing
w/ Power Window
8.0 (82, 71 in.·lbf)
5.4 (55, 48 in.·lbf)
Power Window Regulator Motor Assy LH
w/o Power Door Lock
★ 5.0 (51, 44 in.·lbf)
Front Door Lock Assy LH
Door Lock Wire
◆ Harness Packing
Front Door Inside Panel Plate LH
Front Door Reinforcement
Front Door Window Regulator Sub–assy LH
8.0 (82, 71 in.·lbf)
◆ Front Door Service Hole Cover LH
Front Door Inside Handle Sub–assy LH
Front Door Trim Bracket
Front Door Pull Handle LH
w/ Power Window
Front Door Armrest Base Panel
Power Window Regulator Master Switch
Front Armrest Base Panel Upper LH
Front Door Trim Board Sub–assy LH
Plate
Snap Ring
Front Door Window Regulator Handle Assy
N·m (kgf·cm, ft·lbf) : Specified torque
◆ Non–reusable part
★ Precoated Part
B59031

750DN–01

OVERHAUL

HINT:

- Installation is in the reverse order of the removal. But the installation is indicated only when it has a point.
- In the RH side, work in the same procedure as in the LH side.

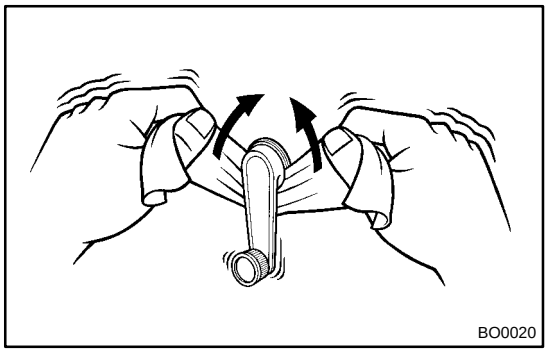

1. REMOVE FRONT DOOR WINDOW REGULATOR HANDLE ASSY (W/O POWER WINDOW)

(a) Using a shop rag, remove the snap ring.

(b) Remove the front door window regulator handle and plate.

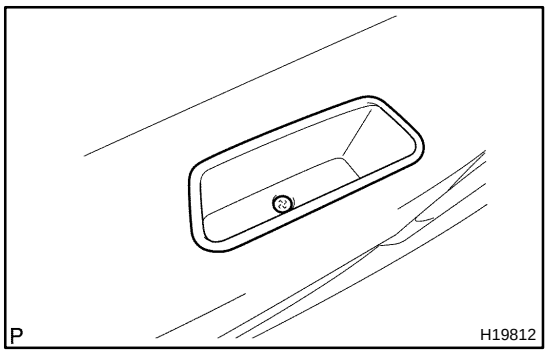

2. REMOVE FRONT DOOR PULL HANDLE LH

(a) Remove the screw.

(b) Using a screwdriver, remove the door pull handle.

HINT:

Tape the screwdriver tip before use.

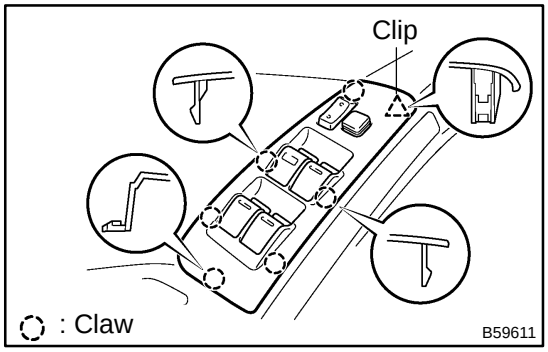

3. REMOVE POWER WINDOW REGULATOR MASTER SWITCH ASSY (W/ POWER WINDOW)

(a) Using a screwdriver, remove the power window regulator master switch assembly from the trim board.

HINT:

Tape the screwdriver tip before use.

(b) Disconnect the master switch connector.

(c) Remove the 3 screws and base panel from the master switch.

4. REMOVE FRONT ARMREST BASE PANEL UPPER LH (W/O POWER WINDOW)

(a) w/o Power door lock:

Remove the front armrest base panel upper.

(1) Using a screwdriver, remove the front armrest base panel upper from the trim board.

HINT:

Tape the screwdriver tip before use.

(b) w/ Power door lock:

Remove the front armrest base panel upper.

(1) Using a screwdriver, remove the front armrest base panel upper from the trim board.

HINT:
Tape the screwdriver tip before use.

(2) Disconnect the door lock switch connector.
(3) Remove the door lock switch from the base panel.

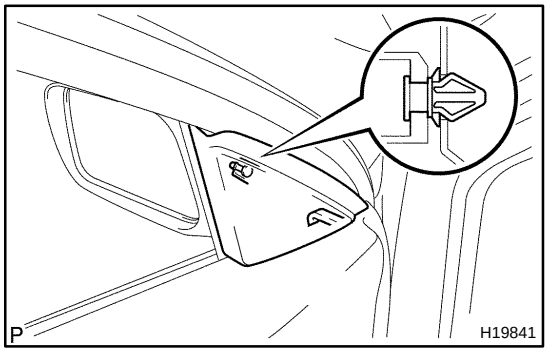

5. REMOVE FRONT DOOR LOWER FRAME BRACKET GARNISH LH

(a) Remove the lower frame bracket garnish.

6. REMOVE FRONT DOOR TRIM BOARD SUB–ASSY LH

(a) Remove the screw.

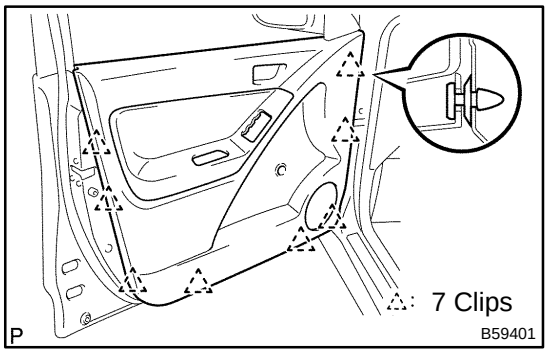

(b) Using a screwdriver, disengage the clips and then pull the trim board upward to remove it.

HINT:
Tape the screwdriver tip before use.

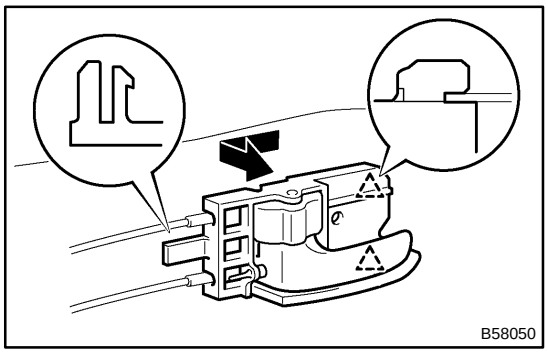

7. REMOVE FRONT DOOR INSIDE HANDLE SUB–ASSY LH

(a) Remove the inside handle, and then disconnect the 2 cables from the inside handle.

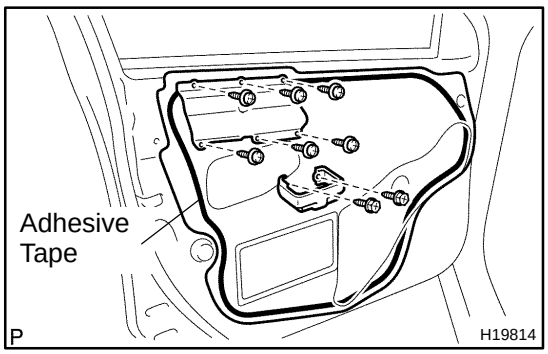

8. REMOVE FRONT DOOR SERVICE HOLE COVER LH

(a) Remove the 6 screws and door trim bracket.
(b) Remove the service hole cover.

NOTICE:
Remove the remaining tape on the body side.

(c) Remove the 2 screws and front door reinforcement.

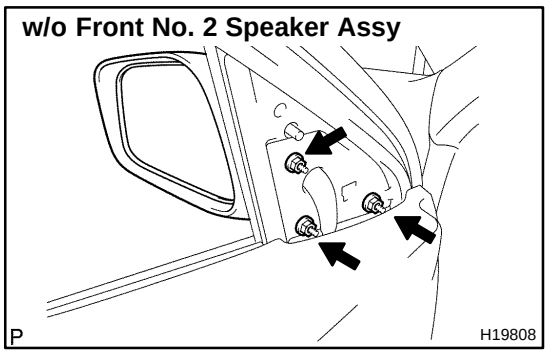

9. REMOVE OUTER REAR VIEW MIRROR ASSY LH

(a) Disconnect the outer mirror connector.

(b) w/o Front No.2 speaker assembly:
Remove the outer mirror assembly.
(1) Remove the 3 nuts and outer mirror assembly.

(c) w/ Front No.2 speaker assembly:
Remove the outer mirror assembly.
(1) Disconnect the speaker connector.
(2) Remove the 2 nuts and front No.2 speaker.
(3) Remove the nut and outer mirror.

10. REMOVE FRONT DOOR BELT MOULDING ASSY LH (See page 76–8)

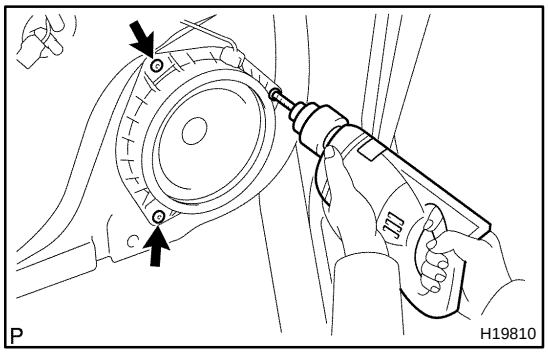

11. REMOVE FRONT NO.1 SPEAKER ASSY

(a) Disconnect the speaker connector.

(b) Using a drill of less than ø 4 mm (0.16 in.), drill out the rivet heads and remove the speaker.

(c) Gently and vertically put the drill onto the rivet, and cut the rivet flanges.

NOTICE:

- **Prizing the hole with a drill can lead to damage to the rivet hole or breaking the drill.**
- **Be careful with the cut rivet, because it is hot.**

(d) Even if the flange is taken off, continue drilling and push out the remaining fragments with the drill.

(e) Using a vacuum cleaner, remove the drilled rivet and dust from the inside of the door.

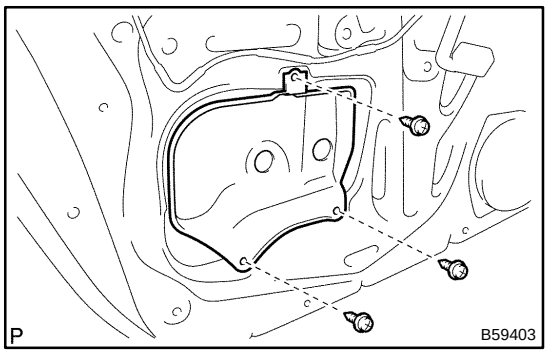

12. REMOVE FRONT DOOR INSIDE PANEL PLATE LH

(a) Remove the 3 screws and front door inside panel plate.

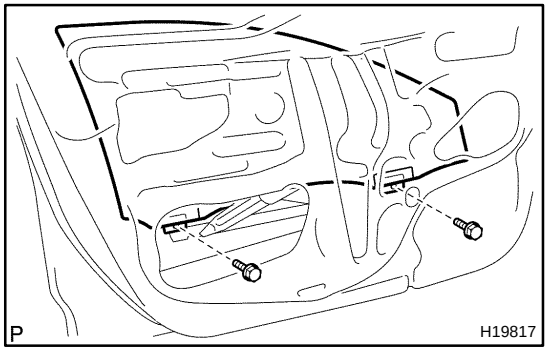

13. REMOVE FRONT DOOR GLASS SUB–ASSY LH

HINT:

Insert a shop rag inside the door panel to prevent the glass from being scratched.

(a) Open the door glass until the bolts appear in the service hole.

(b) Remove the 2 bolts and door glass.

NOTICE:

Do not damage the door glass.

HINT:
Pull the glass upward to remove it.

14. REMOVE FRONT DOOR GLASS RUN LH

(a) Remove the front door glass run.

15. REMOVE FRONT DOOR WINDOW REGULATOR SUB–ASSY LH (W/O POWER WINDOW)

(a) Loosen the 6 bolts.

NOTICE:

When the bolts are removed, the front door window regulator might drop and be deformed.

(b) Remove the 6 bolts and front door window regulator.

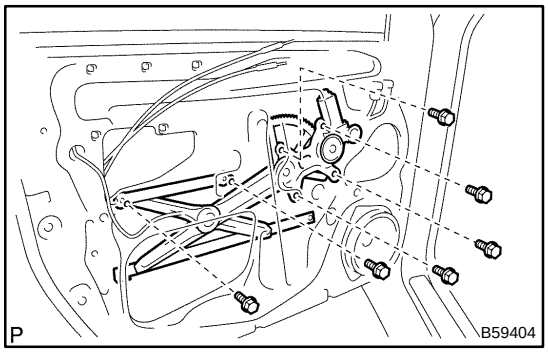

16. REMOVE FRONT DOOR WINDOW REGULATOR SUB–ASSY LH (W/ POWER WINDOW)

(a) Disconnect the window regulator connector.

(b) Loosen the 6 bolts.

NOTICE:

When the bolts are removed, the front door window regulator might drop and be deformed.

(c) Remove the 6 bolts and front door window regulator.

17. REMOVE POWER WINDOW REGULATOR MOTOR ASSY LH (W/ POWER WINDOW)

(a) Place matchmarks on the window regulator motor bracket and regulator gear.

(b) Remove the 3 screws and motor.

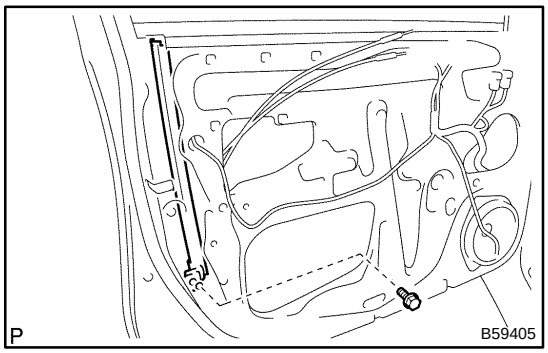

18. REMOVE FRONT DOOR FRAME SUB–ASSY REAR LOWER LH

(a) Remove the bolt and front door frame rear lower.

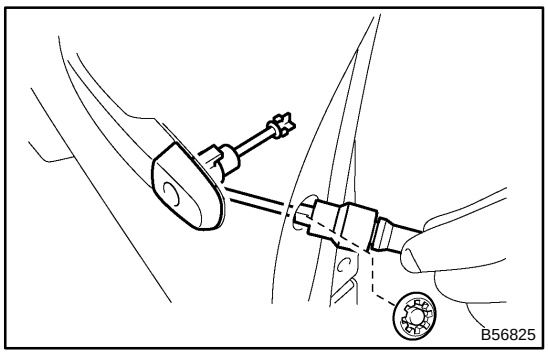

19. REMOVE FRONT DOOR OUTSIDE HANDLE COVER LH

(a) Remove the hole plug.

(b) Using a torx wrench (T30), loosen the screw and remove the door outside handle cover with the door lock key cylinder installed.

20. REMOVE FRONT DOOR LOCK ASSY LH (W/O POWER DOOR LOCK)

(a) Using a torx wrench (T30), remove the 3 screws and door lock assembly.

HINT:
Remove the door lock through the service hole.

(b) Remove the door lock wire harness packing.

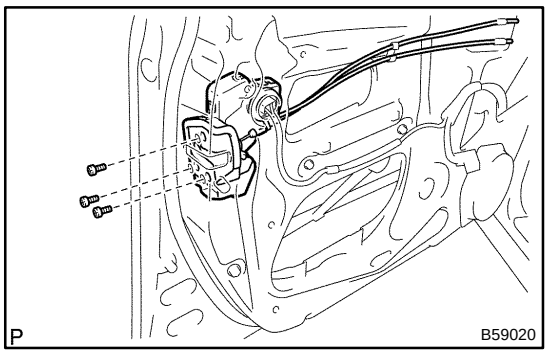

21. REMOVE FRONT DOOR W/MOTOR LOCK ASSY LH (W/ POWER DOOR LOCK)

(a) Disconnect the power door lock connector.

(b) Using a torx wrench (T30), remove the 3 screws and the power door lock assembly.

HINT:

Remove the door lock through the service hole.

(c) Remove the door lock wire harness packing.

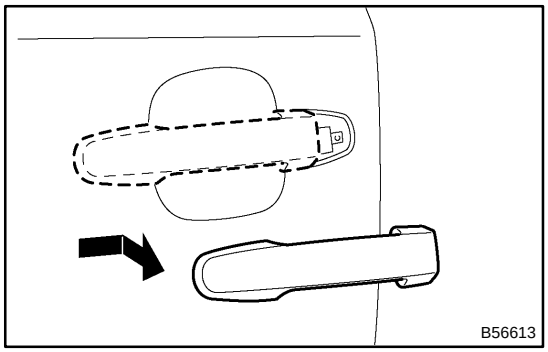

22. REMOVE FRONT DOOR HANDLE ASSY OUTSIDE LH

(a) Pushing the outside handle in the arrow mark direction in the illustration, remove the outside handle.

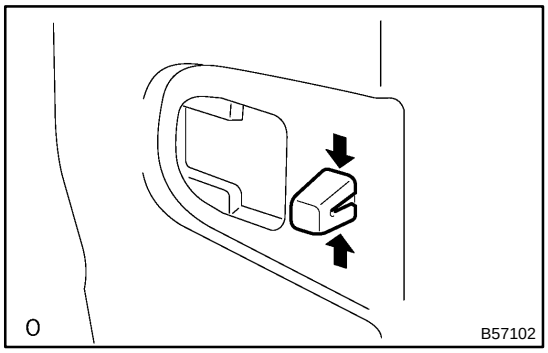

23. REMOVE FRONT DOOR OUTSIDE HANDLE FRAME SUB–ASSY LH

(a) Using a torx wrench (T30), loosen the screw.

(b) Using pliers, disengage the clips and remove the door outside handle frame, as shown in the illustration.

NOTICE:

Be sure to remove the outside handle together with the clips, because the clips will be damaged if the clips remain attached to the door panel.

24. REMOVE FRONT DOOR WEATHERSTRIP LH

(a) Remove the door panel side bolt and disconnect the front door check.

(b) Using a screwdriver, remove the weatherstrip.

HINT:

Tape the screwdriver tip before use.

25. INSTALL FRONT DOOR WEATHERSTRIP LH

(a) Install the weatherstrip.

(b) Install the front door check assembly with the door panel side bolt.

Torque: 5.5 N·m (56 kgf·cm, 49 in.·lbf)

26. INSTALL FRONT DOOR OUTSIDE HANDLE FRAME SUB–ASSY LH

(a) Using a torx wrench (T30), install the outside handle.

Torque: 4.0 N·m (41 kgf·cm, 35 in.·lbf)

27. INSTALL FRONT DOOR LOCK ASSY LH (W/O POWER DOOR LOCK)

(a) Install a new door lock wire harness packing.

(b) Apply MP grease to the sliding and rotating parts of the door lock.

(c) Apply adhesive to the 3 screws.

Part No. 08833–00070, THREE BOND 1324 or equivalent

(d) Using a torx wrench (T30), install the door lock assembly with the 3 screws.

Torque: 5.0 N·m (51 kgf·cm, 44 in.·lbf)

28. INSTALL FRONT DOOR W/MOTOR LOCK ASSY LH (W/ POWER DOOR LOCK)

(a) Install a new door lock wire harness packing.

NOTICE:

- **If reusing the removed lock with front door motor, the packing in the connecting part should be replaced with a new one.**
- **Be careful that no grease and dirt will stick to the packing surface in the connecting part.**
- **Reusing the removed packing or using a damaged packing will cause water to penetrate through the connecting part, and it will result in a malfunction of the door lock.**

(b) Insert the outside handle link into the lock assembly with front door motor, and then set it to the door panel.

NOTICE:

Make sure that the outside handle link is securely engaged with the lock assembly.

(c) Apply MP grease to the sliding and rotating parts of the door lock.

(d) Apply adhesive to the 3 screws.

Part No. 08833–00070, THREE BOND 1324 or equivalent.

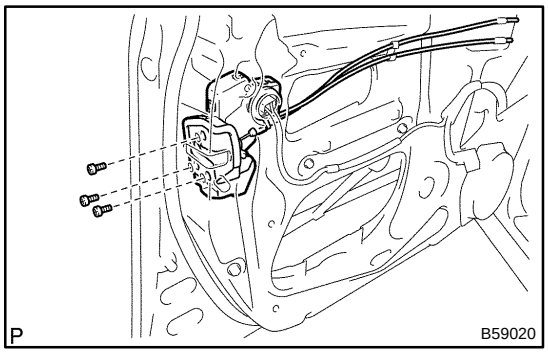

(e) Using a torx wrench (T30), install the front door lock assembly with the 3 screws.

Torque: 5.0 N·m (51 kgf·cm, 44 in.·lbf)

(f) Connect the power door lock connector.

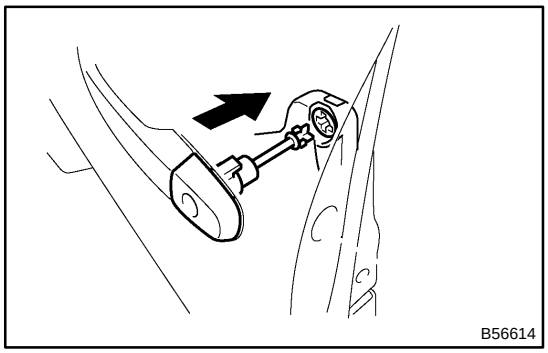

29. INSTALL FRONT DOOR OUTSIDE HANDLE COVER LH

(a) Using a torx wrench (T30), install the door outside handle cover with the screw.

Torque: 4.0 N·m (41 kgf·cm, 35 in.·lbf)

(b) Install the hole plug.

30. INSTALL FRONT DOOR FRAME SUB–ASSY REAR LOWER LH

(a) Install the front door frame rear lower with the bolt.

Torque: 6.2 N·m (63 kgf·cm, 55 in.·lbf)

31. INSTALL POWER WINDOW REGULATOR MOTOR ASSY LH (W/ POWER WINDOW)

(a) Align the matchmarks on the regulator motor bracket and regulator gear.

(b) Install the 3 screws.

Torque: 5.4 N·m (55 kgf·cm, 48 in.·lbf)

HINT:

Never rotate the motor to the down direction until the window glass installation has done.

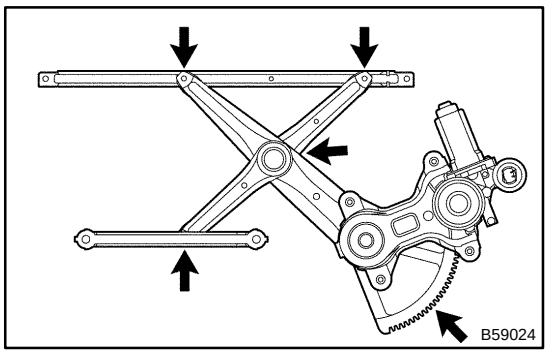

32. INSTALL FRONT DOOR WINDOW REGULATOR SUB–ASSY LH (W/ POWER WINDOW)

(a) Apply MP grease to the sliding and rotating parts of the window regulator.

NOTICE:

Do not apply grease to the spring of the window regulator.

(b) Apply the window regulator to the 6 regulator installtion holes on the front door panel, temporarily install the window regulator with the 6 installation bolts.

(c) Tighten the 6 bolts.

Torque: 8.0 N·m (82 kgf·cm, 71 in.·lbf)

(d) Connect the window regulator connector.

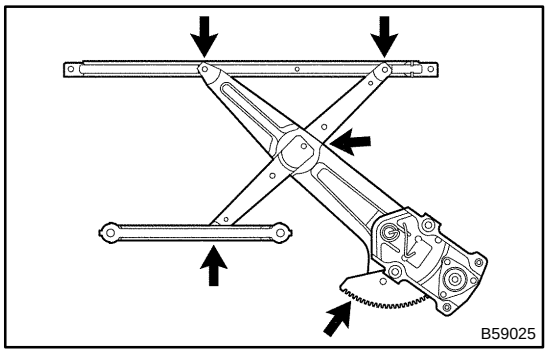

33. INSTALL FRONT DOOR WINDOW REGULATOR SUB–ASSY LH (W/O POWER WINDOW)

(a) Apply MP grease to the sliding and rotating parts of the window regulator.

NOTICE:

Do not apply grease to the spring of the window regulator.

(b) Install the front door window regulator with the 6 bolts.

Torque: 8.0 N·m (82 kgf·cm, 71 in.·lbf)

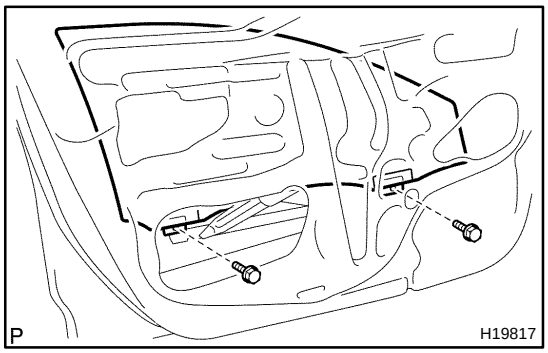

34. INSTALL FRONT DOOR GLASS SUB–ASSY LH (W/ POWER WINDOW)

NOTICE:

Do not damage the door glass.

(a) Put the door glass in the door panel carefully.

(b) Install the door glass to the window regulator with the 2 bolts.

Torque: 8.0 N·m (82 kgf·cm, 71 in.·lbf)

(c) Inspect the power window operation.

HINT:

When the installation point of the front door glass does not match, adjust the regulator position in the manual operation.

(1) Connect the power window switch to the wire harness and turn the ignition switch ON.

(2) Repeat UP and DOWN operation several times in the manual operation.

35. INSPECT POWER WINDOW FUNCTION (W/ POWER WINDOW) (See page 70–4)

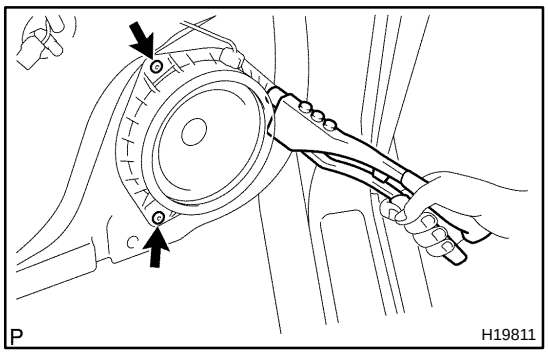

36. INSTALL FRONT NO.1 SPEAKER ASSY

(a) Install the front speaker to the door.

(b) Using an air riveter or hand riveter, install the front speaker.

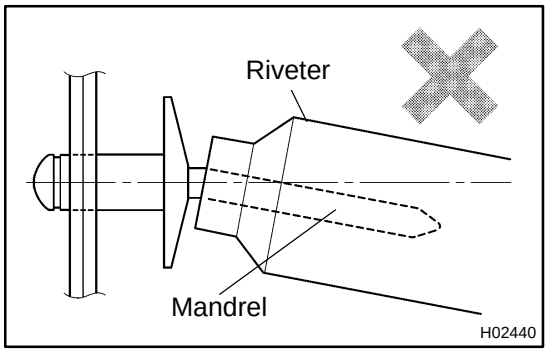

NOTICE:

- **Do not prize a riveter, because the riveter will be damaged, and the mandrel will be bent.**

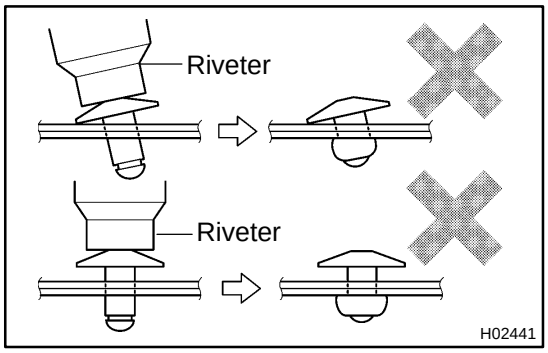

- **Do not tilt the riveter when removing the rivet, because the materials are not tightened firmly.**

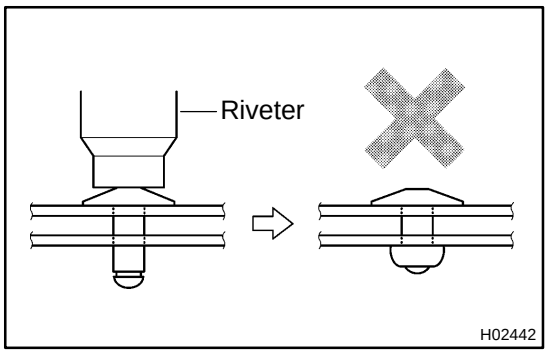

- **Install the rivet while attaching the materials, because they are not tightened firmly.**

(c) Connect the speaker connector.

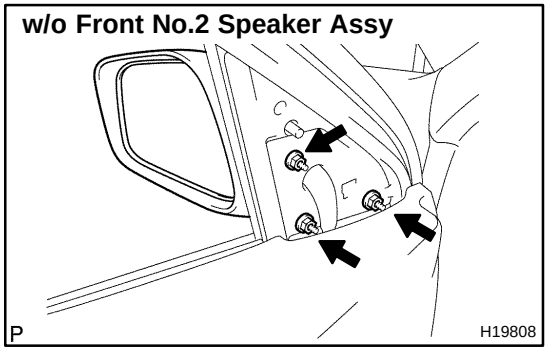

37. INSTALL OUTER REAR VIEW MIRROR ASSY LH

(a) w/o Front No.2 speaker assembly:
Install the outer mirror assembly.
(1) Install the outer mirror with the 3 nuts.
Torque: 8.0 N·m (82 kgf·cm, 71 in.·lbf)

(b) w/ Front No.2 speaker assembly:
Install the outer mirror assembly.
(1) Temporarily install the outer mirror with the nut.
(2) Temporarily install the front No.2 speaker with the 2 nuts.

(3) Tighten the 3 nuts.

Torque: 8.0 N·m (82 kgf·cm, 71 in.·lbf)

(4) Connect the speaker connector.

(c) Connect the outer mirror connector.

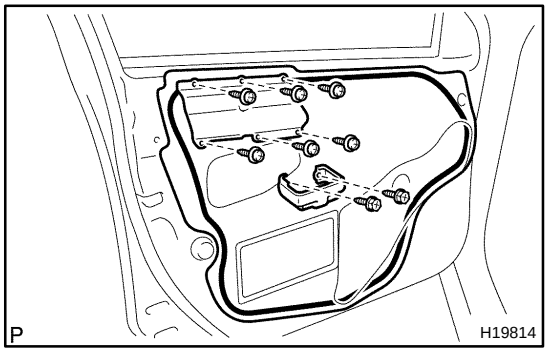

38. INSTALL FRONT DOOR SERVICE HOLE COVER LH

(a) Install the front door reinforcement with the 6 screws.

(b) Install a new service hole cover to the door panel.

HINT:

- When installing the service hole cover, pull out the links and connectors through the service hole cover.
- There should be no wrinkles or folds after attaching the service hole cover.
- After attaching the service hole cover, sealing condition should be confirmed.

(c) Install the door trim board bracket with the 2 screws.

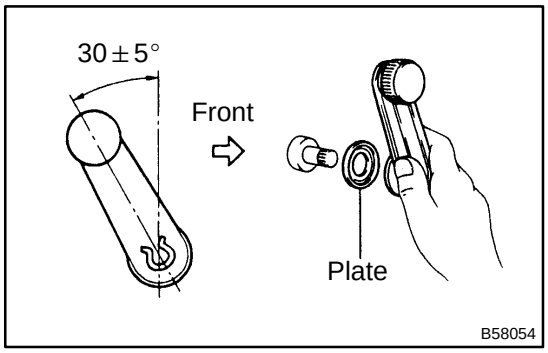

39. INSTALL FRONT DOOR WINDOW REGULATOR HANDLE ASSY (W/O POWER WINDOW)

(a) Install the regulator handle with the snap ring.

HINT:

With the door window fully closed, install the plate and regulator handle with the snap ring as shown in the illustration.

HOOD

ADJUSTMENT

750DL–01

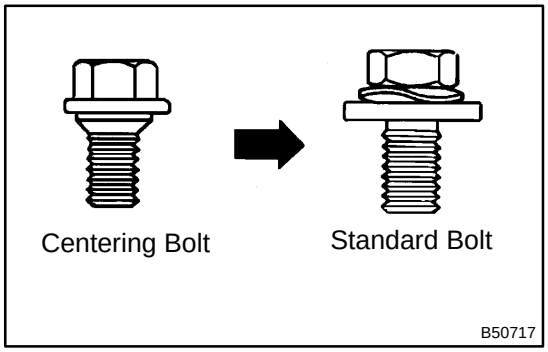

HINT:
Since the centering bolt is used as a hood hinge and hood lock set bolt, the hood and hood lock can not be adjusted with it on. Substitute a bolt with washer for the centering bolt.

1. INSPECT HOOD SUB–ASSY

(a) Check that the clearance is within the standard value.

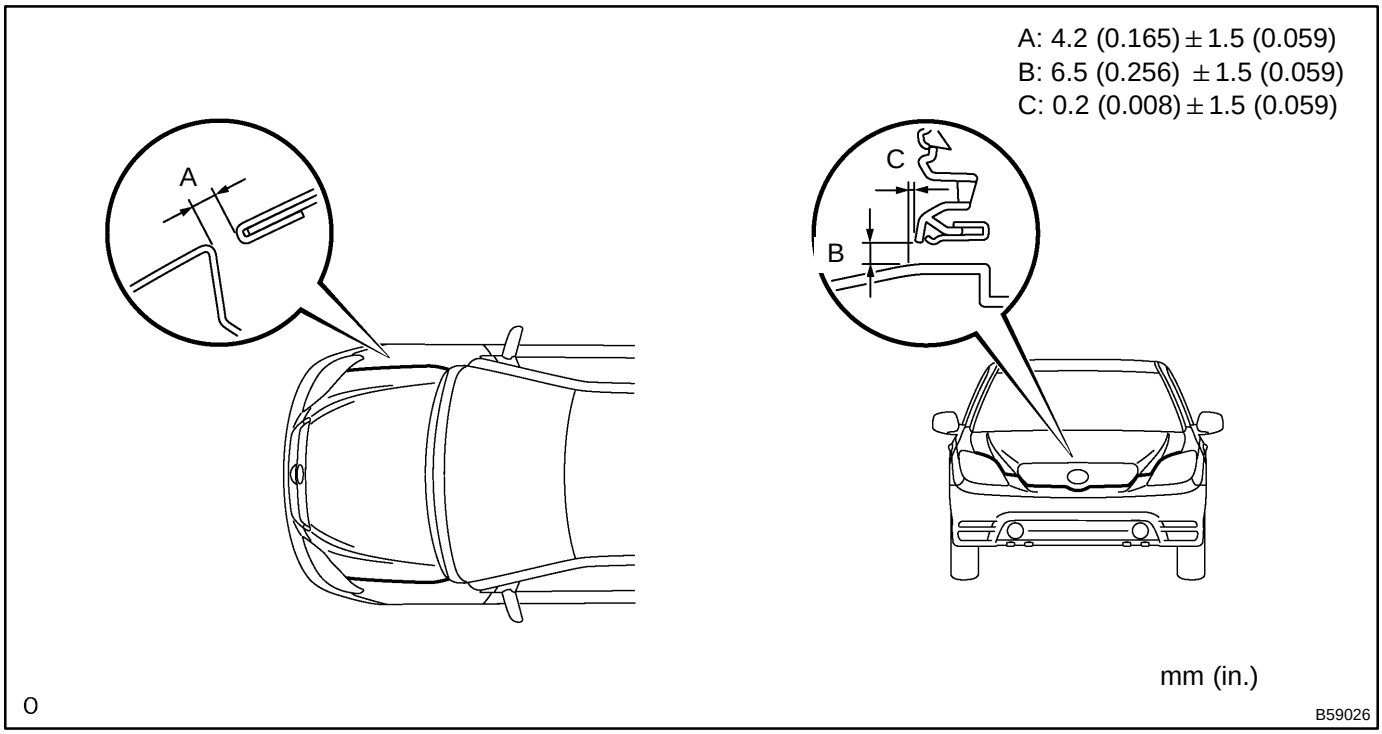

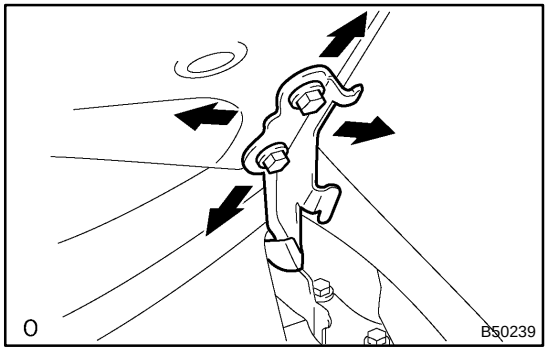

2. ADJUST HOOD SUB–ASSY

(a) Adjust the hood by loosening the hood side hinge bolts.
Torque: 13 N·m (133 kgf·cm, 10 ft·lbf)

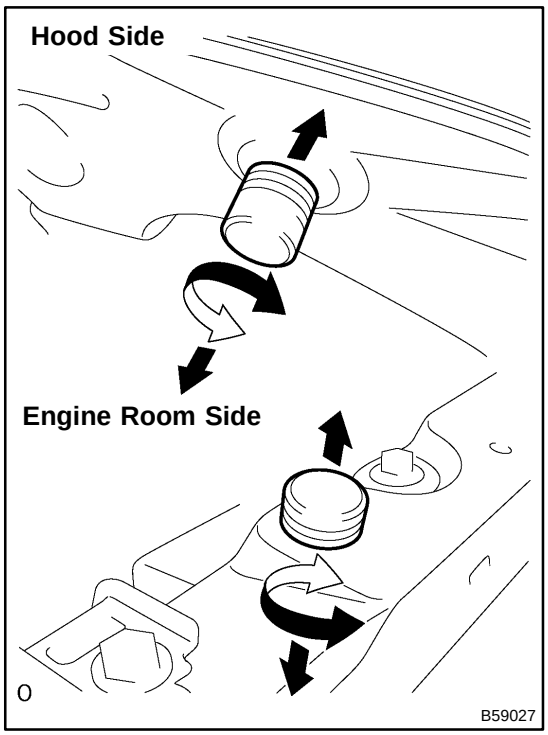

(b) Adjust the hood by turning the cushions.

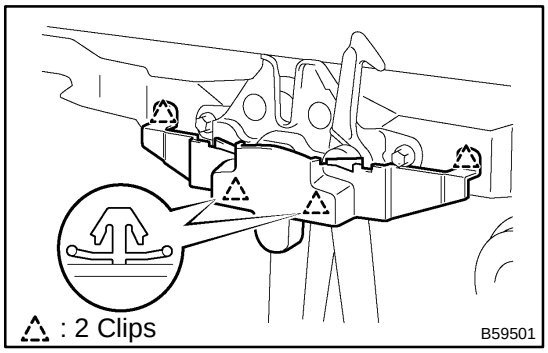

(c) Using a screwdriver, remove the hood lock release lever cover.

HINT:

Tape the screwdriver tip before use.

NOTICE:

Removing the protector damages the clips inside the protector, and therefore the use of a new protector is necessary on installation.

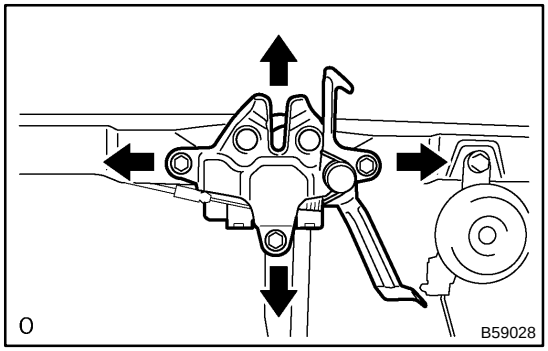

(d) Adjust the lock by loosening the bolts.

ADJUSTMENT

HINT:

- In the RH side, work in the same procedure as in the LH side.
- Since the centering bolt is used as a door side hinge bolt, the door hinge cannot be adjusted with it on. Substitute the bolt with washer for the centering bolt.

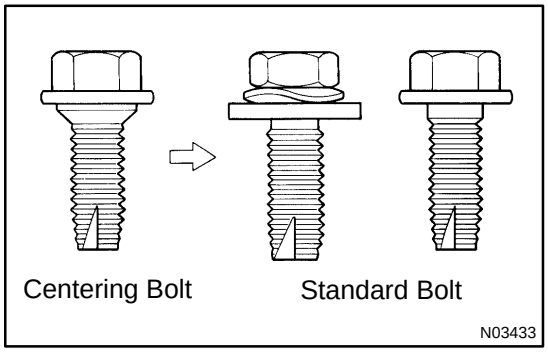

1. INSPECT REAR DOOR PANEL SUB–ASSY LH

(a) Check that the clearance is within the standard value.

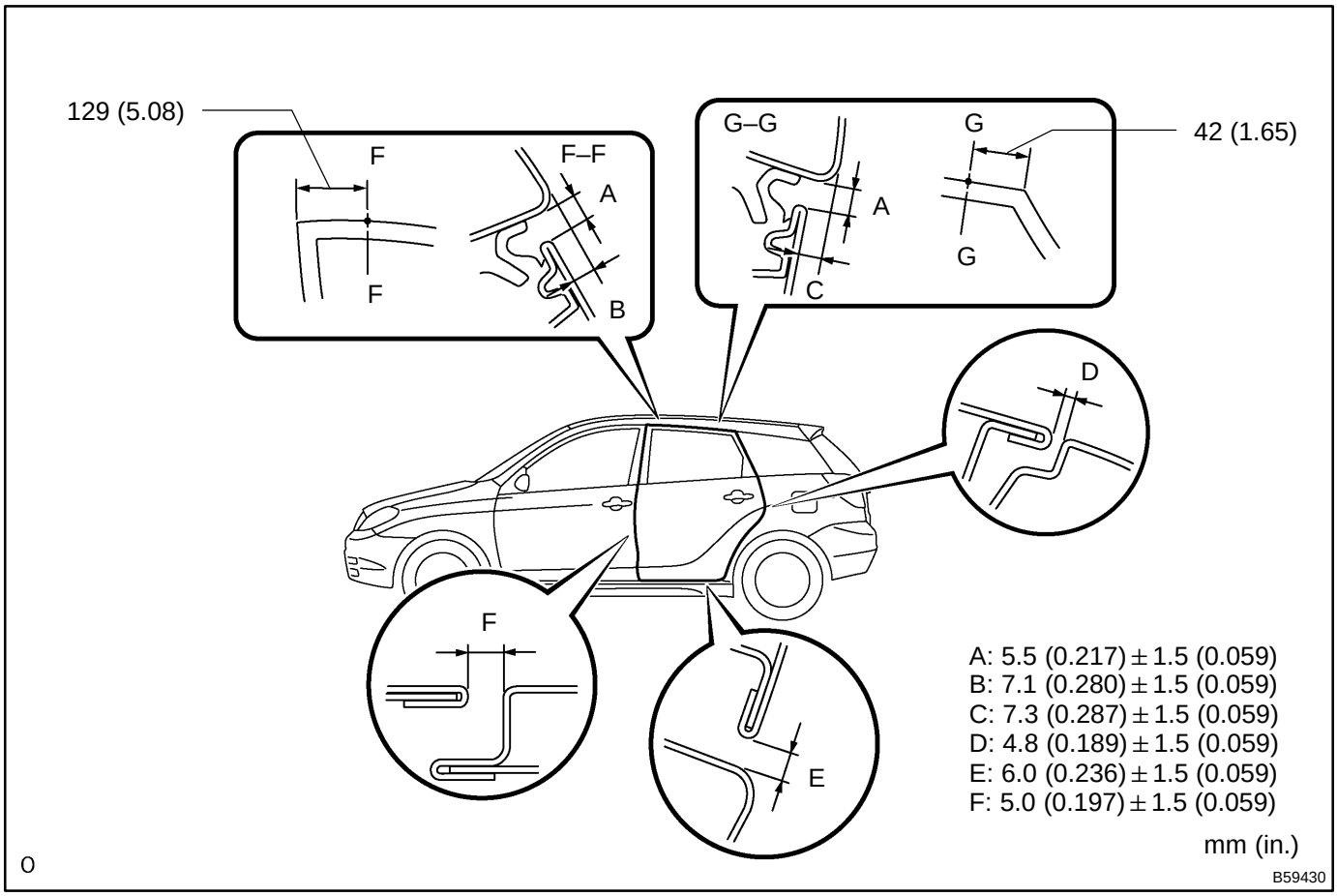

2. REMOVE FRONT DOOR SCUFF PLATE LH (See page 76–17)

3. REMOVE REAR DOOR SCUFF PLATE LH (See page 76–17)

4. REMOVE FRONT DOOR WEATHERSTRIP LH (See page 75–5)

5. REMOVE REAR DOOR WEATHERSTRIP LH (See page 75–18)

6. REMOVE CENTER PILLAR GARNISH LOWER LH (See page 76–17)

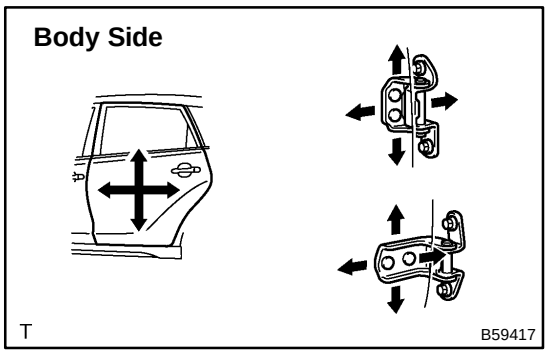

7. ADJUST REAR DOOR PANEL SUB–ASSY LH

(a) Adjust the door in the forward/rearward and the vertical direction.

(1) Adjust the door by loosening the body side hinge nuts.

Torque: 26 N·m (265 kgf·cm, 19 ft·lbf)

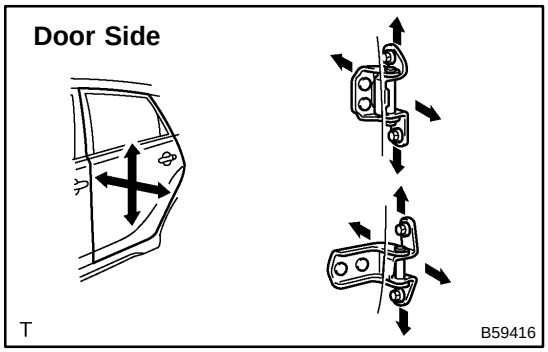

(b) Adjust the door in the inner/outer and the vertical direction.

(1) Adjust the door by loosening the door side hinge bolts.

Torque: 26 N·m (265 kgf·cm, 19 ft·lbf)

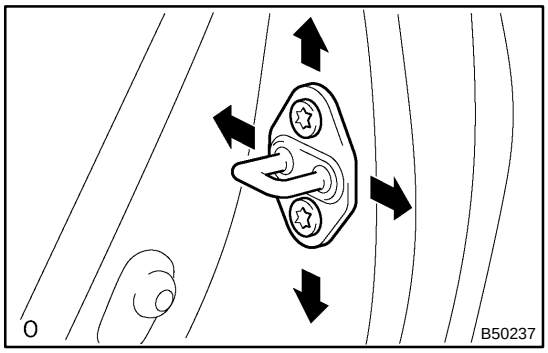

(c) Adjust the striker position by slightly loosening the striker mounting screws, and hitting the striker with a plastic–faced hammer.

(d) Tighten the striker mounting screws again.

Torque: 23 N·m (235 kgf·cm, 17 ft·lbf)

REAR DOOR

COMPONENTS

750DP–01

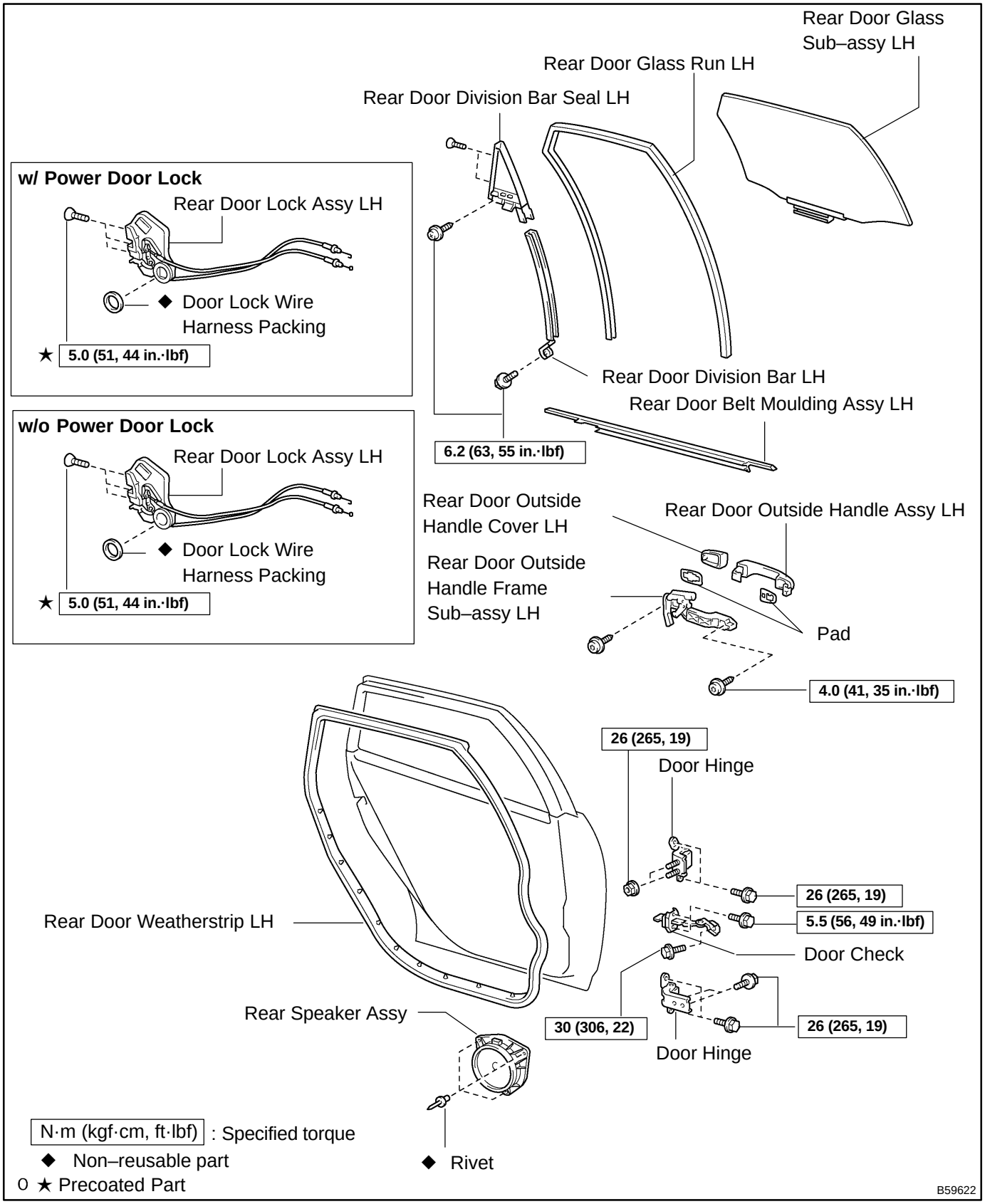

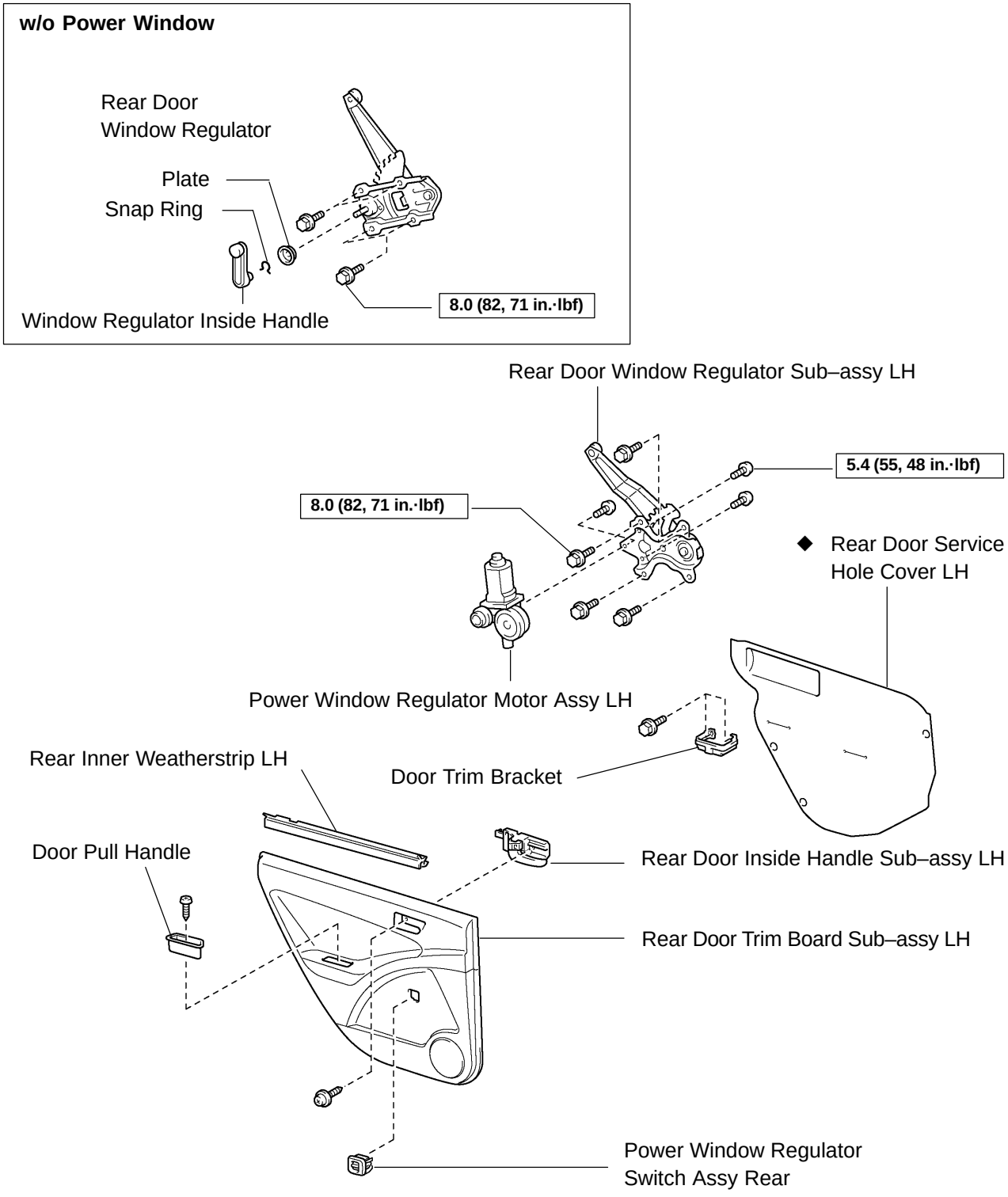
w/o Power Window
Rear Door
Window Regulator
Plate
Snap Ring
Window Regulator Inside Handle
8.0 (82, 71 in.·lbf)
Rear Door Window Regulator Sub–assy LH
5.4 (55, 48 in.·lbf)
8.0 (82, 71 in.·lbf)
◆ Rear Door Service
Hole Cover LH
Power Window Regulator Motor Assy LH
Rear Inner Weatherstrip LH
Door Trim Bracket
Door Pull Handle
Rear Door Inside Handle Sub–assy LH
Rear Door Trim Board Sub–assy LH
Power Window Regulator
Switch Assy Rear
N·m (kgf·cm, ft·lbf) : Specified torque
◆ Non–reusable Part
B59621

750DQ–01

OVERHAUL

HINT:

- Installation is in the reverse order of the removal. But the installation is indicated only when it has a point.
- In the RH side, work in the same procedure as in the LH side.

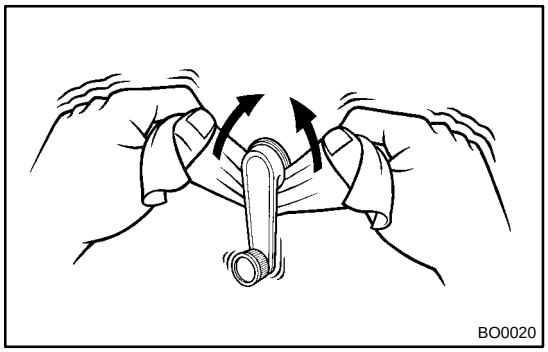

1. REMOVE REAR DOOR WINDOW REGULATOR HANDLE ASSY (W/O POWER WINDOW)

(a) Using a shop rag, remove the snap ring.

(b) Remove the rear door window regulator handle and plate.

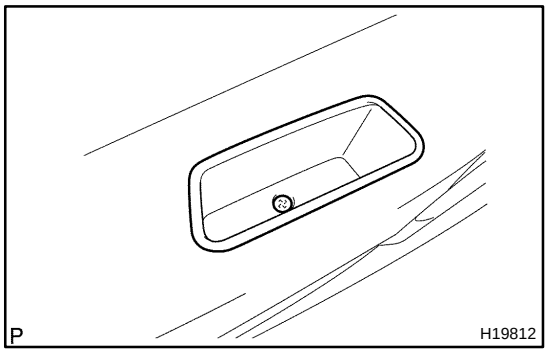

2. REMOVE REAR DOOR PULL HANDLE

(a) Remove the screw.

(b) Using a screwdriver, remove the door pull handle.

HINT:

Tape the screwdriver tip before use.

3. REMOVE REAR DOOR TRIM BOARD SUB–ASSY LH

(a) Remove the screw.

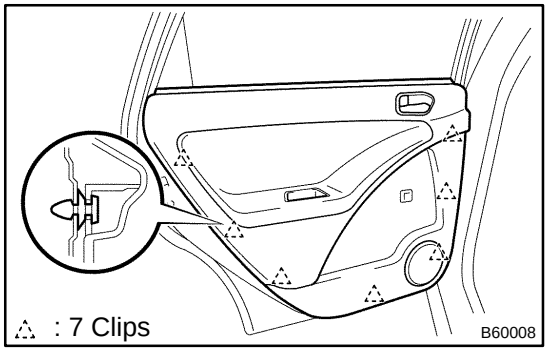

(b) Using a screwdriver, disengage the clips and then pull the trim board upward to remove it.

HINT:

Tape the screwdriver tip before use.

4. REMOVE POWER WINDOW REGULATOR SWITCH ASSY REAR (W/ POWER WINDOW)

(a) Disconnect the regulator switch connector.

(b) Remove the power window regulator switch assembly.

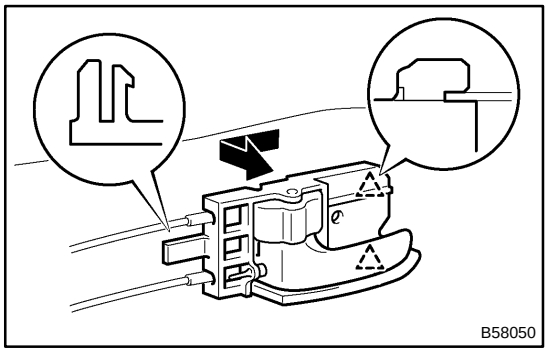

5. REMOVE REAR DOOR INSIDE HANDLE SUB–ASSY LH

(a) Remove the inside handle, and then disconnect the 2 cables from the inside handle.

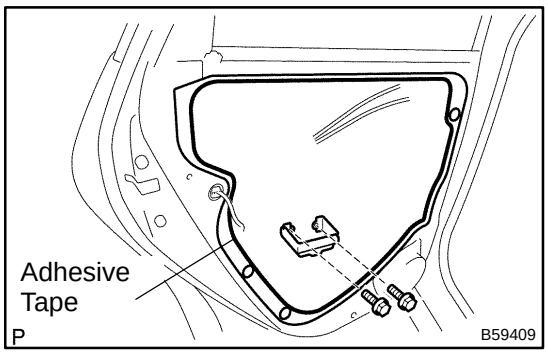

6. REMOVE REAR DOOR SERVICE HOLE COVER LH

(a) Remove the 2 screws and door trim bracket.

(b) Remove the service hole cover.

7. REMOVE REAR DOOR BELT MOULDING ASSY LH (See page 76–9)

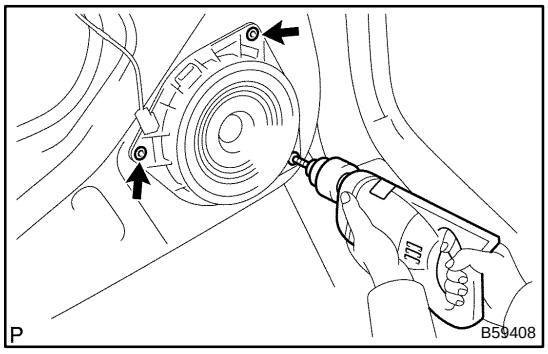

8. REMOVE REAR SPEAKER ASSY

(a) Disconnect the speaker connector.

(b) Using a drill of less than ø 4 mm (0.16 in.), drill out the rivet heads and remove the speaker.

(c) Gently and vertically put the drill onto the rivet, and cut the rivet flanges.

NOTICE:

- **Prizing the hole with a drill can lead to damage to the rivet hole or breaking the drill.**
- **Be careful with the cut rivet, because it is hot.**

(d) Even if the flange is taken off, continue drilling and push out the remaining fragments with the drill.

(e) Using a vacuum cleaner, remove the drilled rivet and dust from the inside of the door.

9. REMOVE REAR DOOR GLASS RUN LH

(a) Remove the rear door glass run.

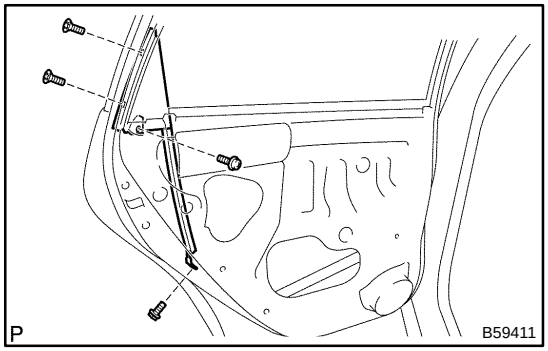

10. REMOVE REAR DOOR WINDOW DIVISION BAR SUB–ASSY LH

(a) Remove the bolt and 3 screws.

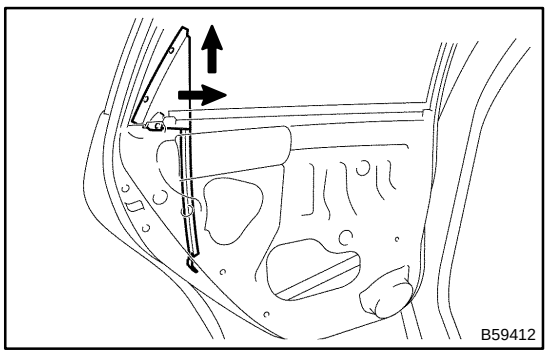

(b) Rotate the rear door division bar and division bar seal by 90° and pull it upward, as shown in the illustration.

(c) Remove the division bar from the division bar seal.

11. REMOVE REAR DOOR GLASS SUB–ASSY LH

HINT:

Insert a shop rag inside the door panel to prevent the glass from being scratched.

(a) Open the door glass.

(b) Tilt the door glass and disconnect the roller of the regulator from the channel to remove the door glass.

NOTICE:

Do not damage the door glass.

HINT:

Pull the glass upward to remove it.

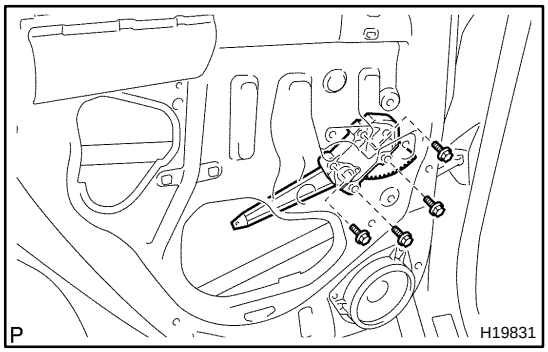

12. REMOVE REAR DOOR WINDOW REGULATOR SUB–ASSY LH (W/O POWER WINDOW)

(a) Loosen the 4 bolts.

NOTICE:

When the bolts are removed, the rear door window regulator might drop and be deformed.

(b) Remove the 4 bolts and rear door window regulator.

13. REMOVE REAR DOOR WINDOW REGULATOR SUB–ASSY LH (W/ POWER WINDOW)

(a) Disconnect the window regulator connector.

(b) Loosen the 4 bolts.

NOTICE:

When the bolts are removed, the rear door window regulator might drop and be deformed.

(c) Remove the 4 bolts and rear door window regulator.

14. REMOVE POWER WINDOW REGULATOR MOTOR ASSY LH (W/ POWER WINDOW)

(a) Using a torx wrench (T30), remove the 3 bolts and the motor assembly.

15. REMOVE REAR DOOR LOCK ASSY LH (W/O POWER DOOR LOCK)

(a) Using a torx wrench (T30), remove the 3 bolts and the rear door lock assembly.

(b) Remove the door lock wire harness packing.

HINT:

Remove the door lock through the service hole.

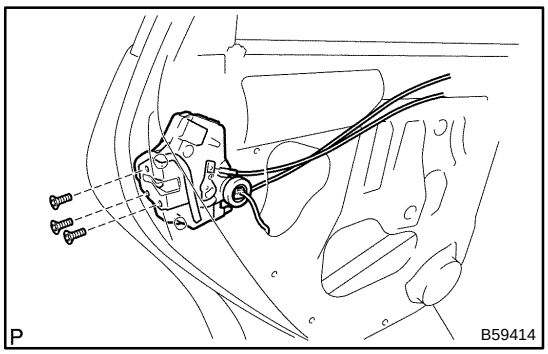

16. REMOVE REAR DOOR W/MOTOR LOCK ASSY LH (W/ POWER DOOR LOCK)

(a) Disconnect the power door lock connector.

(b) Using a torx wrench (T30), remove the 3 screws and the power door lock assembly.

HINT:

Remove the door lock through the service hole.

(c) Remove the door lock wire harness packing.

17. REMOVE REAR DOOR OUTSIDE HANDLE COVER LH

(a) Using a torx wrench (T30), loosen the screw and remove the rear door outside handle cover.

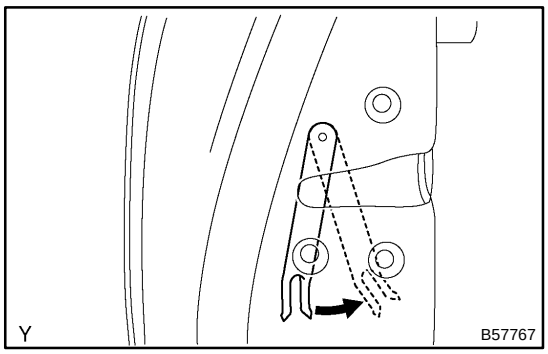

18. REMOVE REAR DOOR OUTSIDE HANDLE ASSY LH

(a) Pull and hold the release plate of the outside handle frame, as shown in the illustration.

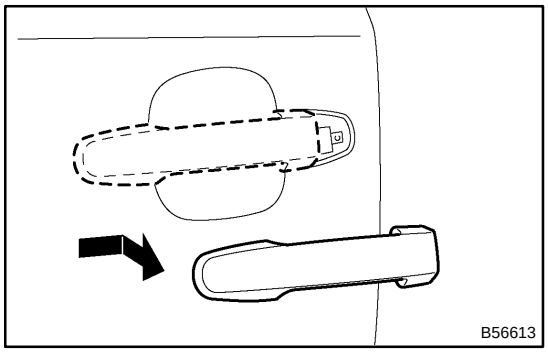

(b) Pushing the outside handle in the arrow mark direction as shown in the illustration, remove the outside handle.

NOTICE:

If the release plate is not pulled and held when removing the outside handle, then the release plate will interfere with the outside handle and it will damage the release plate.

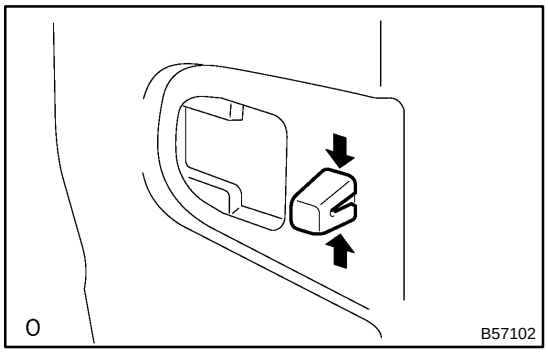

19. REMOVE REAR DOOR OUTSIDE HANDLE FRAME SUB–ASSY LH

(a) Using a torx wrench (T30), loosen the screw.

(b) Using pliers, disengage the clips and remove the outside handle frame, as shown in the illustration.

NOTICE:

Be sure to remove the outside handle together with the clips, because the clips will be damaged if the clips remain attached to the door panel.

20. REMOVE REAR DOOR WEATHERSTRIP LH

(a) Remove the door panel side bolt and disconnect the rear door check.

(b) Using a screwdriver, remove the weatherstrip.

HINT:

Tape the screwdriver tip before use.

21. INSTALL REAR DOOR WEATHERSTRIP LH

(a) Install the weatherstrip.

(b) Install the rear door check assembly with the door panel side bolt.

Torque: 5.5 N·m (56 kgf·cm, 49 in.·lbf)

22. INSTALL REAR DOOR OUTSIDE HANDLE FRAME SUB–ASSY LH

(a) Using a torx wrench (T30), install the outside handle frame with the screw.

Torque: 4.0 N·m (41 kgf·cm, 35 in.·lbf)

23. INSTALL REAR DOOR OUTSIDE HANDLE COVER LH

(a) Using a torx wrench (T30), install the outside handle cover with the screw.

Torque: 4.0 N·m (41 kgf·cm, 35 in.·lbf)

24. INSTALL REAR DOOR LOCK ASSY LH (W/O POWER DOOR LOCK)

(a) Install a new door lock wire harness packing.

(b) Apply MP grease to the sliding and rotating parts of the door lock.

(c) Apply adhesive to the 3 screws.

Part No. 08833–00070, THREE BOND 1324 or equivalent

(d) Using a torx wrench (T30), install the door lock assembly with the 3 screws.
Torque: 5.0 N·m (51 kgf·cm, 44 in.·lbf)

25. INSTALL REAR DOOR W/MOTOR LOCK ASSY LH (W/ POWER DOOR LOCK)

(a) Install a new door lock wire harness packing.

NOTICE:

- **If reusing the removed lock with rear door motor, the packing in the connecting part should be replaced with a new one.**
- **Be careful that no grease and dirt will stick to the packing surface in the connecting part.**
- **Reusing the removed packing or using a damaged packing will cause water to penetrate through the connecting part, and it will result in a malfunction of the door lock.**

(b) Engage the lock assembly with door motor with the release plate of the outside handle, and then set it to the door panel.

NOTICE:

Make sure that the release plate of the outside handle frame is securely engaged with the lock assembly.

(c) Apply MP grease to the sliding and rotating parts of the door lock.

(d) Apply adhesive to the 3 screws.
Part No. 08833–00070, THREE BOND 1324 or equivalent.

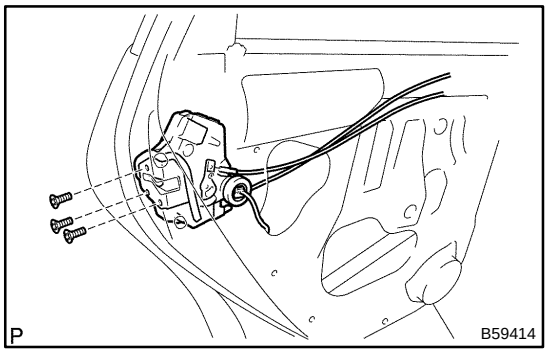

(e) Using a torx wrench (T30), install the power door lock assembly with the 3 screws.
Torque: 5.0 N·m (51 kgf·cm, 44 in.·lbf)

(f) Connect the power door lock connector.

26. INSTALL POWER WINDOW REGULATOR MOTOR ASSY LH (W/ POWER WINDOW)

(a) Using a torx wrench (T30), install the power window regulator motor assembly with the 3 screws.
Torque: 5.4 N·m (55 kgf·cm, 48 in.·lbf)

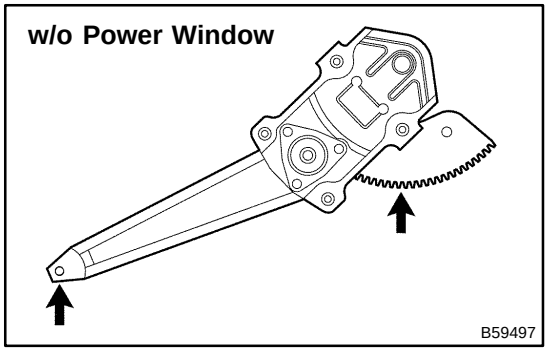

27. INSTALL REAR DOOR WINDOW REGULATOR SUB–ASSY LH (W/O POWER WINDOW)

(a) Apply MP grease to the sliding and rotating parts of the window regulator.

NOTICE:

Do not apply grease to the spring of the window regulator.

(b) Install the rear door window regulator with the 4 bolts.
Torque: 8.0 N·m (82 kgf·cm, 71 in.·lbf)

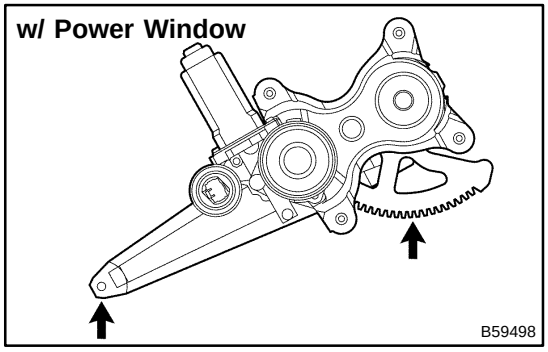

28. INSTALL REAR DOOR WINDOW REGULATOR SUB–ASSY LH (W/ POWER WINDOW)

(a) Apply MP grease to the sliding and rotating parts of the window regulator.

NOTICE:

Do not apply grease to the spring of the window regulator.

(b) Apply the window regulator to the 4 regulator installtion holes on the front door panel, temporarily install the window regulator with the installation bolts.

(c) Tighten the 4 bolts.

Torque: 8.0 N·m (82 kgf·cm, 71 in.·lbf)

(d) Connect the window regulator connector.

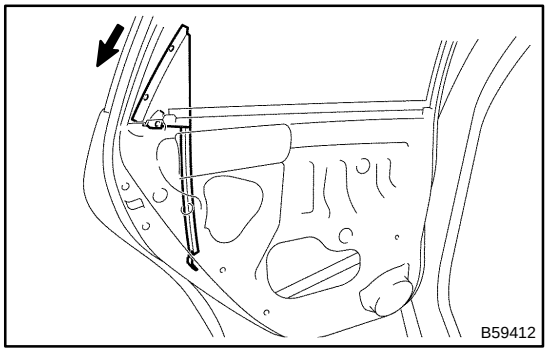

29. INSTALL REAR DOOR WINDOW DIVISION BAR SUB–ASSY LH

(a) Insert the door window division bar sub–assy to the door panel, then rotate it by 90°.

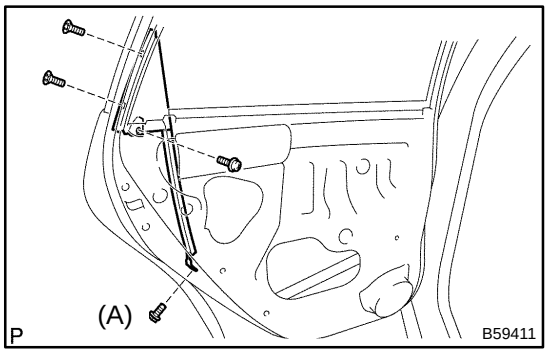

(b) Install the bolt and 3 screws.
Torque:
Bolt A: 6.2 N·m (63 kgf·cm, 55 in.·lbf)

30. INSTALL REAR DOOR GLASS SUB–ASSY LH (W/ POWER WINDOW)

HINT:

Insert a shop rag inside the door panel to prevent the glass from being scratched.

(a) Tilt the door glass and connect the roller of the regulator to the glass channel to install the door glass.

(b) Inspect the power window operation.

(1) Connect the power window switch to the wire harness and turn the ignition switch ON.

(2) Repeat UP and DOWN operation several times in the manual operation.

31. INSPECT POWER WINDOW FUNCTION (W/ POWER WINDOW) (See page 70–4)

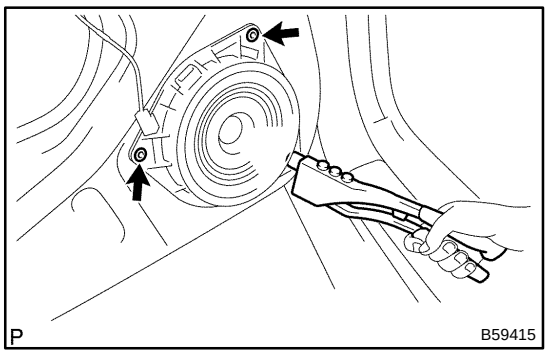

32. INSTALL REAR SPEAKER ASSY

(a) Install the rear speaker to the door.

(b) Using an air riveter or hand riveter, install the rear speaker.

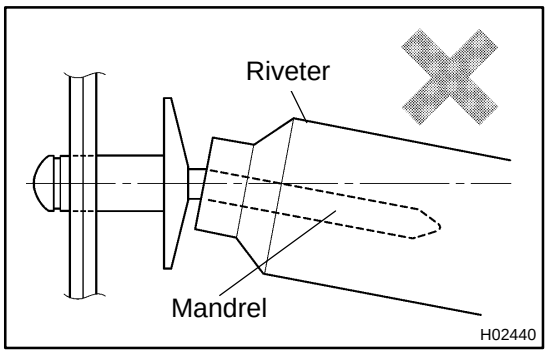

NOTICE:

- **Do not prize a riveter, because the riveter will be damaged, and the mandrel will be bent.**

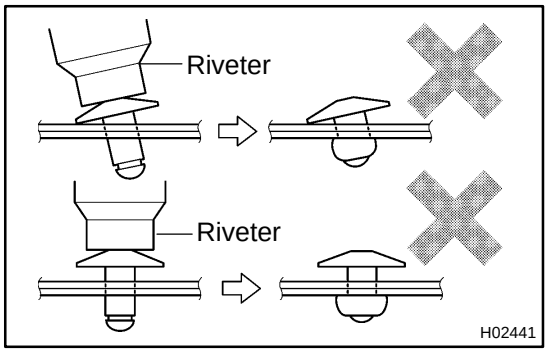

- **Do not tilt the riveter when removing the rivet, because the materials are not tightened firmly.**

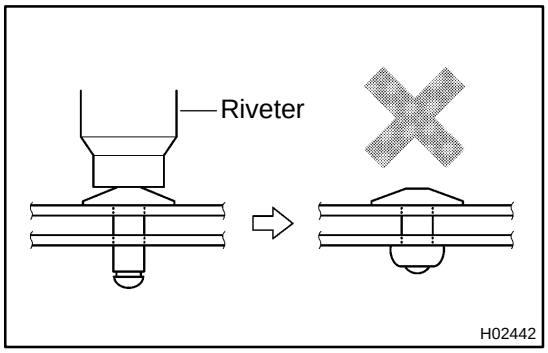

- **Install the rivet while attaching the materials, because they are not tightened firmly.**

(c) Connect the speaker connector.

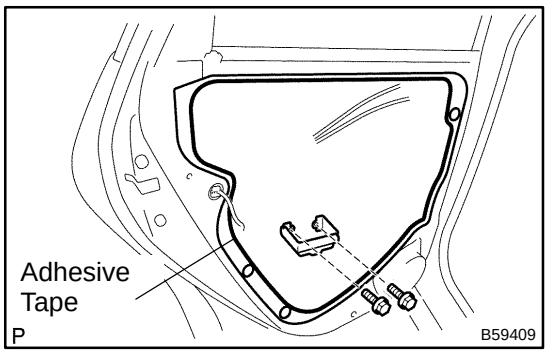

33. INSTALL REAR DOOR SERVICE HOLE COVER LH

(a) Install the service hole cover to the door panel.

HINT:

- When installing the service hole cover, pull out the links and connectors through the service hole cover.
- There should be no wrinkles and folds after attaching the service hole cover.
- After attaching the service hole cover, sealing condition should be confirmed.

(b) Install the door trim bracket with the 2 screws.

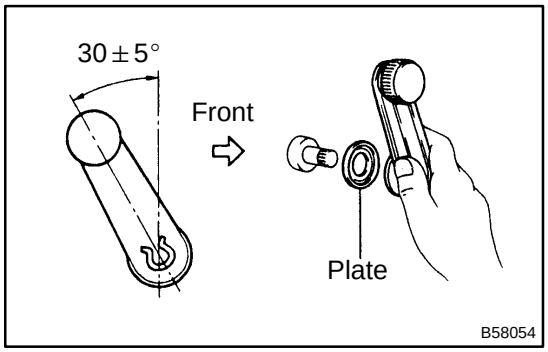

34. INSTALL REAR DOOR WINDOW REGULATOR HANDLE ASSY (W/O POWER WINDOW)

(a) Install the regulator handle with the snap ring.

HINT:

With the door window fully closed, install the plate and regulator handle with the snap ring as shown in the illustration.

750DU–01

ADJUSTMENT

1. INSPECT BACK DOOR PANEL SUB–ASSY

(a) Check that the clearance is within the standard value.

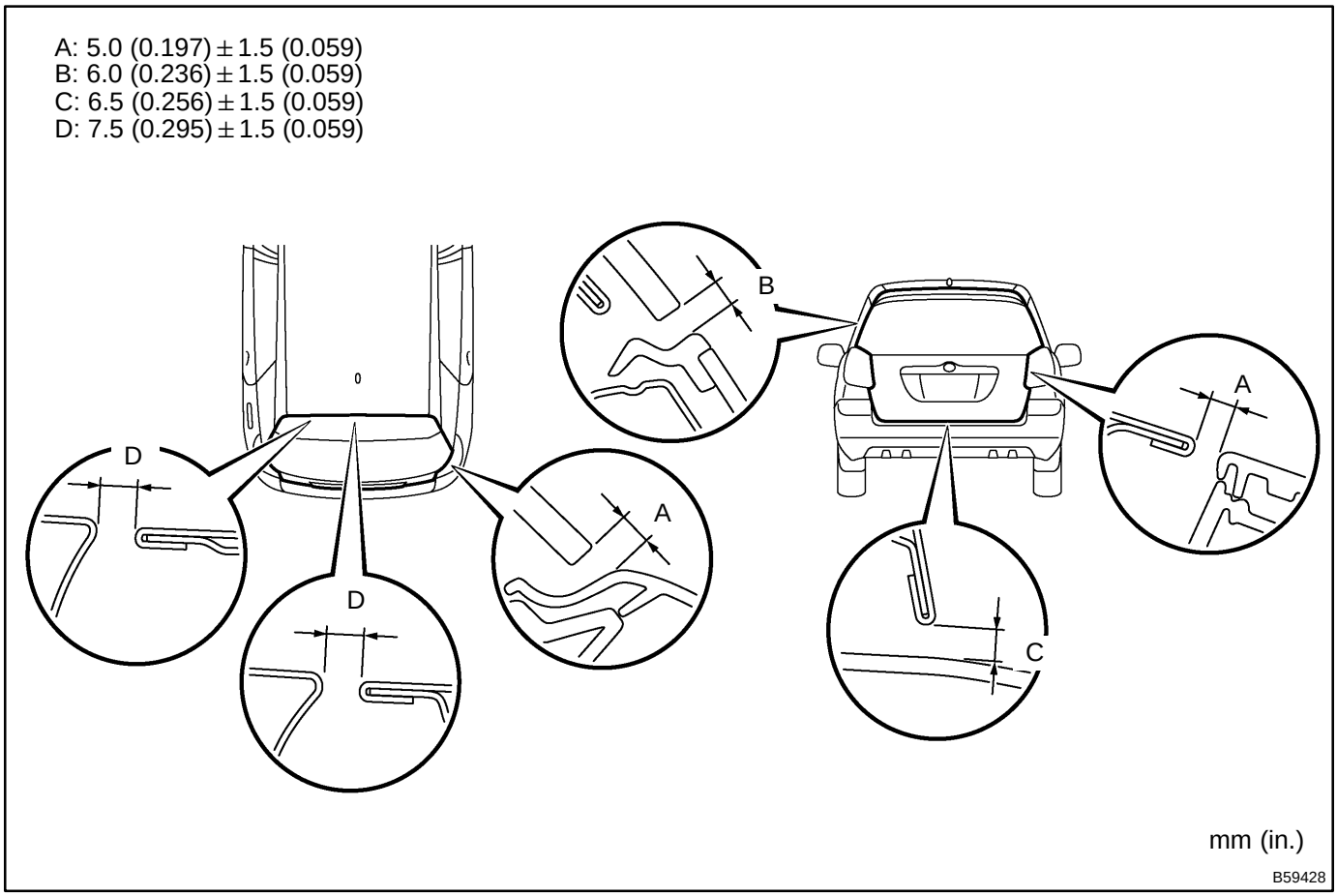

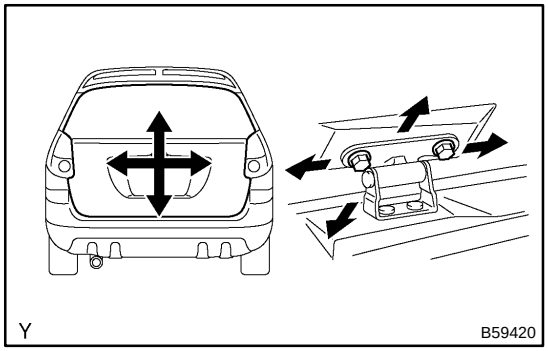

2. ADJUST BACK DOOR PANEL SUB–ASSY

(a) Adjust the door in the left/right and the vertical direction.

(1) Adjust the door by loosening the door side hinge bolts.

Torque: 19.5 N·m (199 kgf·cm, 14 ft·lbf)

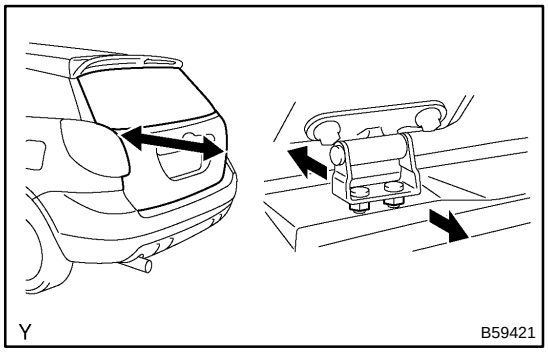

(b) Adjust the door in the forward/rearward direction.

(1) Adjust the door by loosening the body side hinge nuts.

Torque: 19.5 N·m (199 kgf·cm, 14 ft·lbf)

(c) Adjust the back door lock striker.

(1) Remove the rear floor finish plate (See page 76–12).

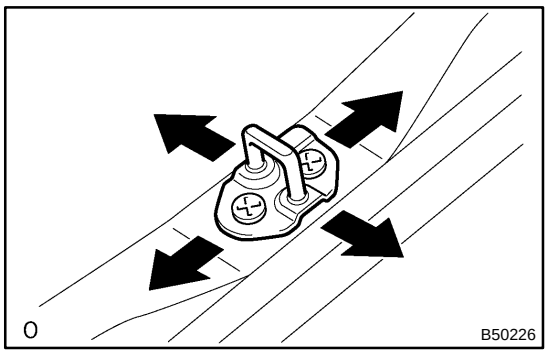

(2) Check that the door fit and door linkage are adjusted correctly.
(3) Adjust the striker by loosening the striker mounting screws.

Torque: 11.5 N·m (117 kgf·cm, 8.5 ft·lbf)

(4) Using a plastic–faced hammer, tap the striker for adjustment.

BACK DOOR

COMPONENTS

750DS–01

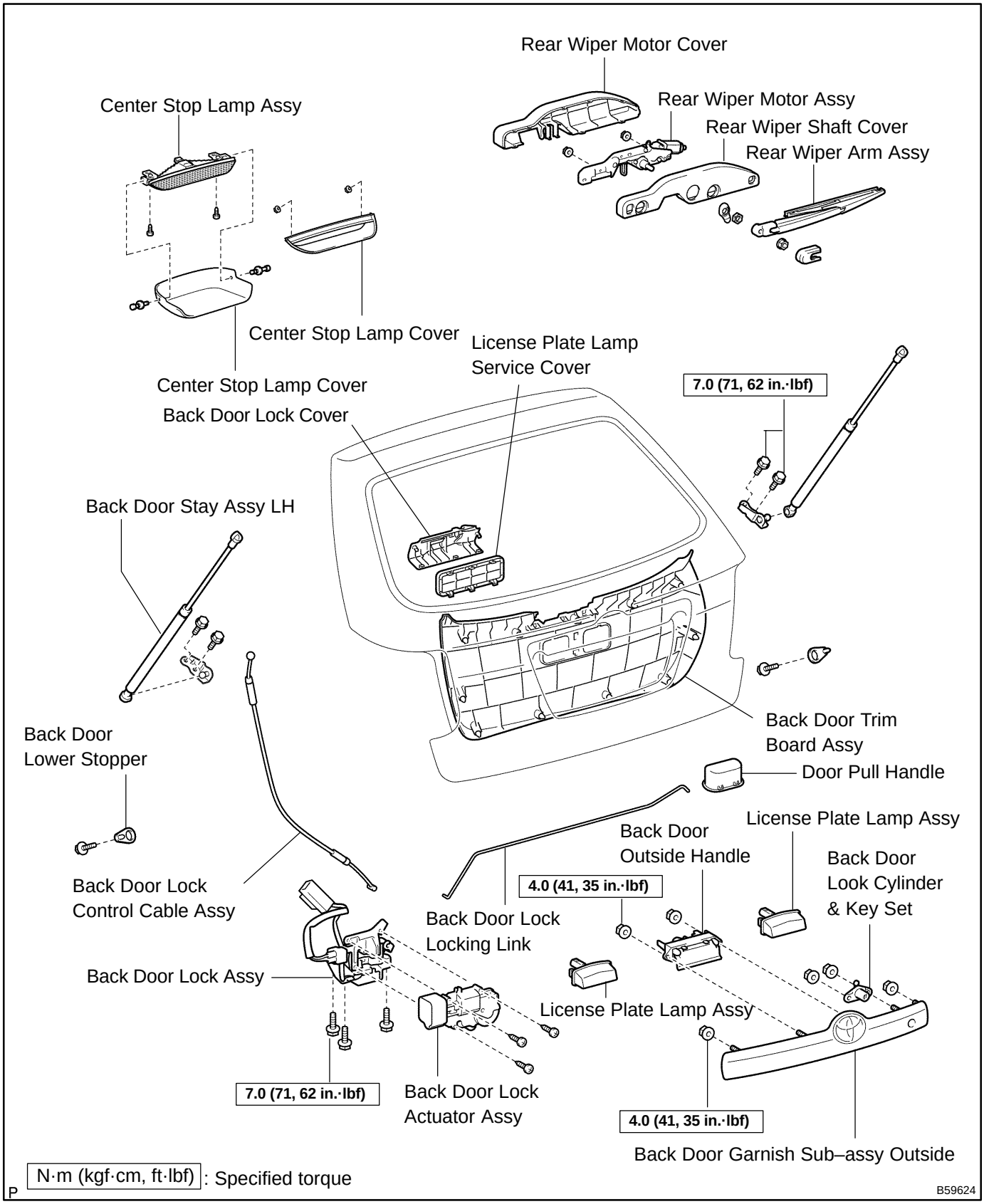

750DT–01

OVERHAUL

HINT:

Installation is in the reverse order of the removal.

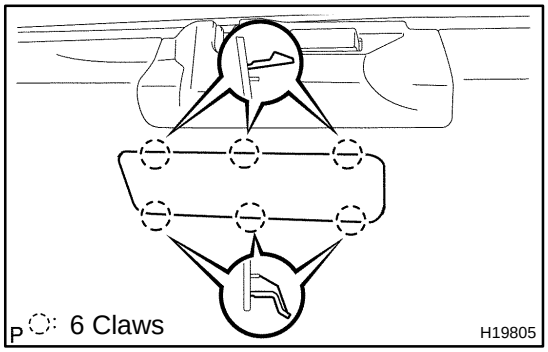

1. REMOVE LICENSE PLATE LAMP SERVICE COVER

(a) Using a screwdriver, remove the cover.

HINT:

Tape the screwdriver tip before use.

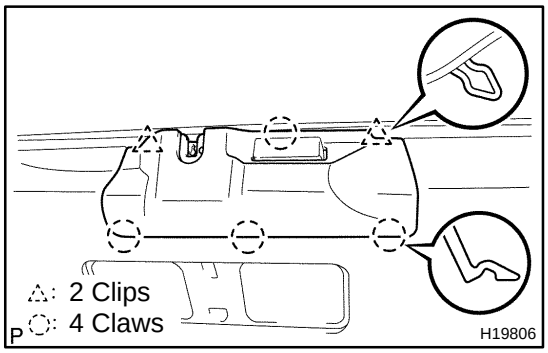

2. REMOVE BACK DOOR LOCK COVER

(a) Using a screwdriver, remove the cover.

HINT:

Tape the screwdriver tip before use.

3. REMOVE DOOR PULL HANDLE

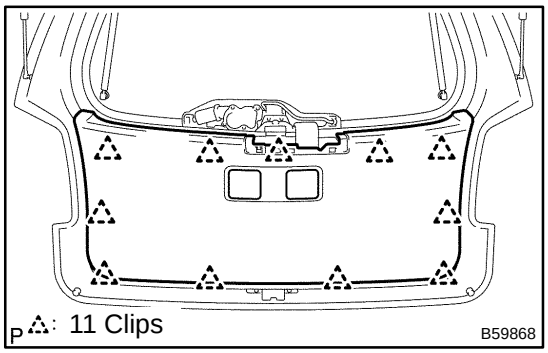

4. REMOVE BACK DOOR TRIM BOARD ASSY

(a) Using a screwdriver, remove the back door trim board.

HINT:

Tape the screwdriver tip before use.

5. REMOVE REAR WIPER ARM ASSY (See page 66–11)

6. REMOVE REAR WIPER MOTOR ASSY (See page 66–11)

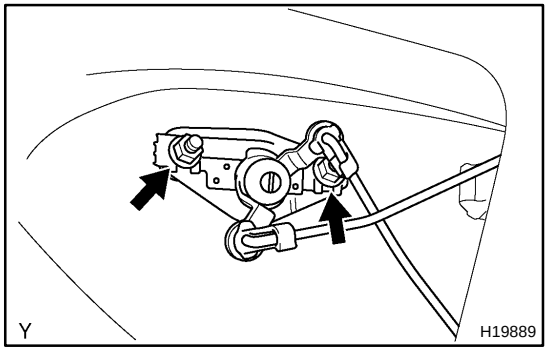

7. REMOVE BACK DOOR LOCK CYLINDER & KEY SET

(a) Disconnect the 2 links from the door lock cylinder.

(b) Remove the 2 nuts and door lock cylinder.

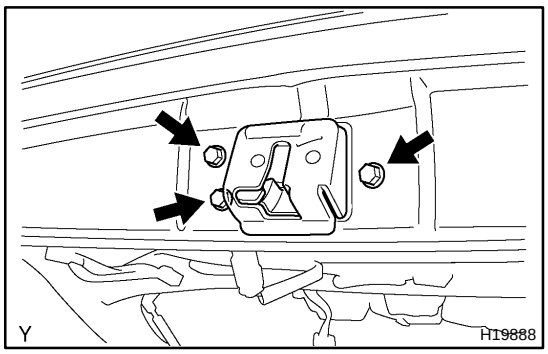

8. REMOVE BACK DOOR LOCK ASSY

(a) Remove the 3 bolts and the back door lock assembly, and then disconnect the connector and link.
Torque: 7.0 N·m (71 kgf·cm, 62 in.·lbf)

(b) Remove the 3 screws and back door lock actuator assembly from the back door lock assembly.

9. REMOVE LICENSE PLATE LAMP ASSY

(a) Remove the 2 license plate lamps, and then disconnect the connectors.

HINT:

Tape the screwdriver tip before use.

10. REMOVE BACK DOOR OUTSIDE HANDLE

(a) Remove the 2 nuts and back door outside handle, and then disconnect the connector.
Torque: 4.0 N·m (41 kgf·cm, 35 in.·lbf)

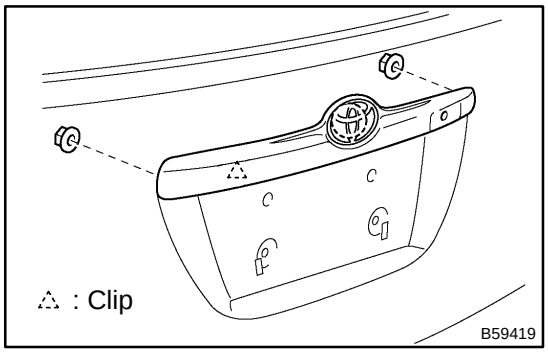

11. REMOVE BACK DOOR GARNISH SUB–ASSY OUTSIDE

(a) Remove the 2 nuts and back door outside garnish.

(b) Using a screwdriver, remove the back door outside garnish.
Torque: 4.0 N·m (41 kgf·cm, 35 in.·lbf)

12. REMOVE CENTER STOP LAMP ASSY

(a) Remove the 2 clips and center stop lamp cover.

(b) Remove the 2 screws and stop lamp, and then disconnect the connector.

(c) Remove the 2 nuts and center stop lamp cover.

DISPOSAL

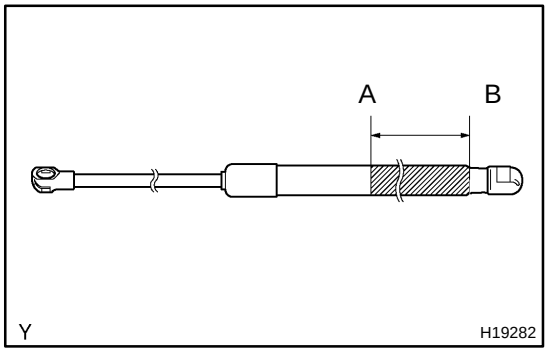

1. DISPOSE BACK DOOR STAY ASSY LH

(a) Fix the back door stay, with the piston–rod pulled out, on a vise.

(b) With protection glasses on, drill a 2.0 – 3.0 mm (0.079 – 0.118 in.) hole in the lower half of the bottom (A – B)of the back door stay, as shown in the illustration, to completely release the high–pressure gas before disposing of it.

NOTICE:

When handling the back door stay:

- **Do not disassemble the back door stay because the cylinder is filled with pressurized gas.**
- **When drilling, chips may fly off, so work carefully.**
- **The gas is colorless, odorless and non–toxic.**
- **When working, handle the back door stay carefully. Never scratch the exposed part of the piston rod, and never allow paint or oil to get on it.**
- **Do not turn the piston rod and cylinder with the back door stay fully extended.**

BACK DOOR STAY ASSY LH

750DV–01

REPLACEMENT

HINT:

- Installation is in the reverse order of the removal. But, the installation is indicated only when it has a point.
- In the RH side, work in the same procedure as in the LH side.

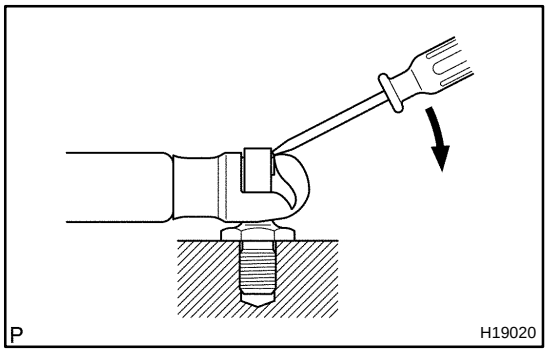

1. REMOVE BACK DOOR STAY ASSY LH

(a) Using a screwdriver, remove the back door stay from the back door panel.

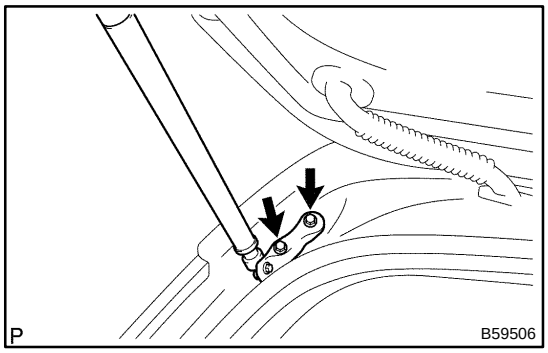

(b) Remove the 2 bolts and back door stay with the stay bracket from the body.

HINT:

While supporting the back door with your hand, remove the back door stay.

(c) Using a screwdriver, remove the back door stay from the bracket.

2. INSTALL BACK DOOR STAY ASSY LH

(a) Install the back door stay with the 2 bolts.
Torque: 7.0 N·m (71 kgf·cm, 62 in.·lbf)

ROCKER PANEL MOULDING LH

760IF–01

REPLACEMENT

HINT:

- Installation is in the reverse order of the removal. But the installation is indicated only when it has a point.
- In the RH side, work in the same procedure as in the LH side.

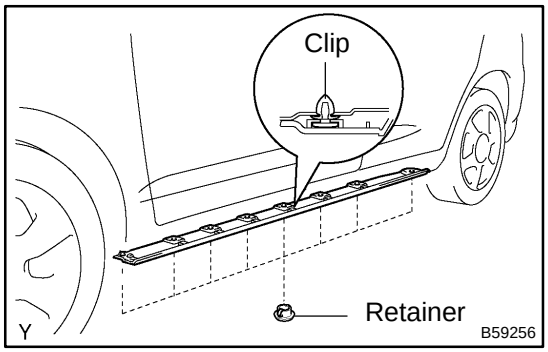

1. REMOVE ROCKER PANEL MOULDING LH

(a) Remove the 8 reatainers.

(b) Using a screwdriver, remove the rocker panel moulding.

HINT:

Tape the screwdriver tip before use.

(c) Remove the 7 clips from the moulding.

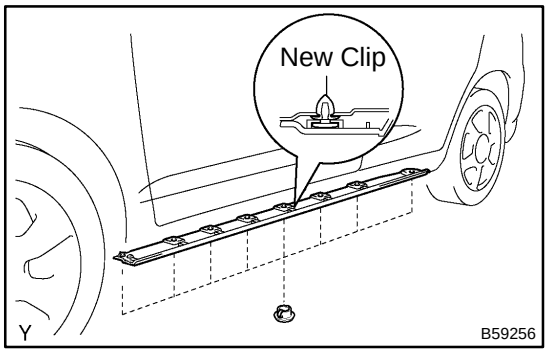

2. INSTALL ROCKER PANEL MOULDING LH

(a) Install new 7 clips to the moulding.

NAME PLATE

REPLACEMENT

760IG–01

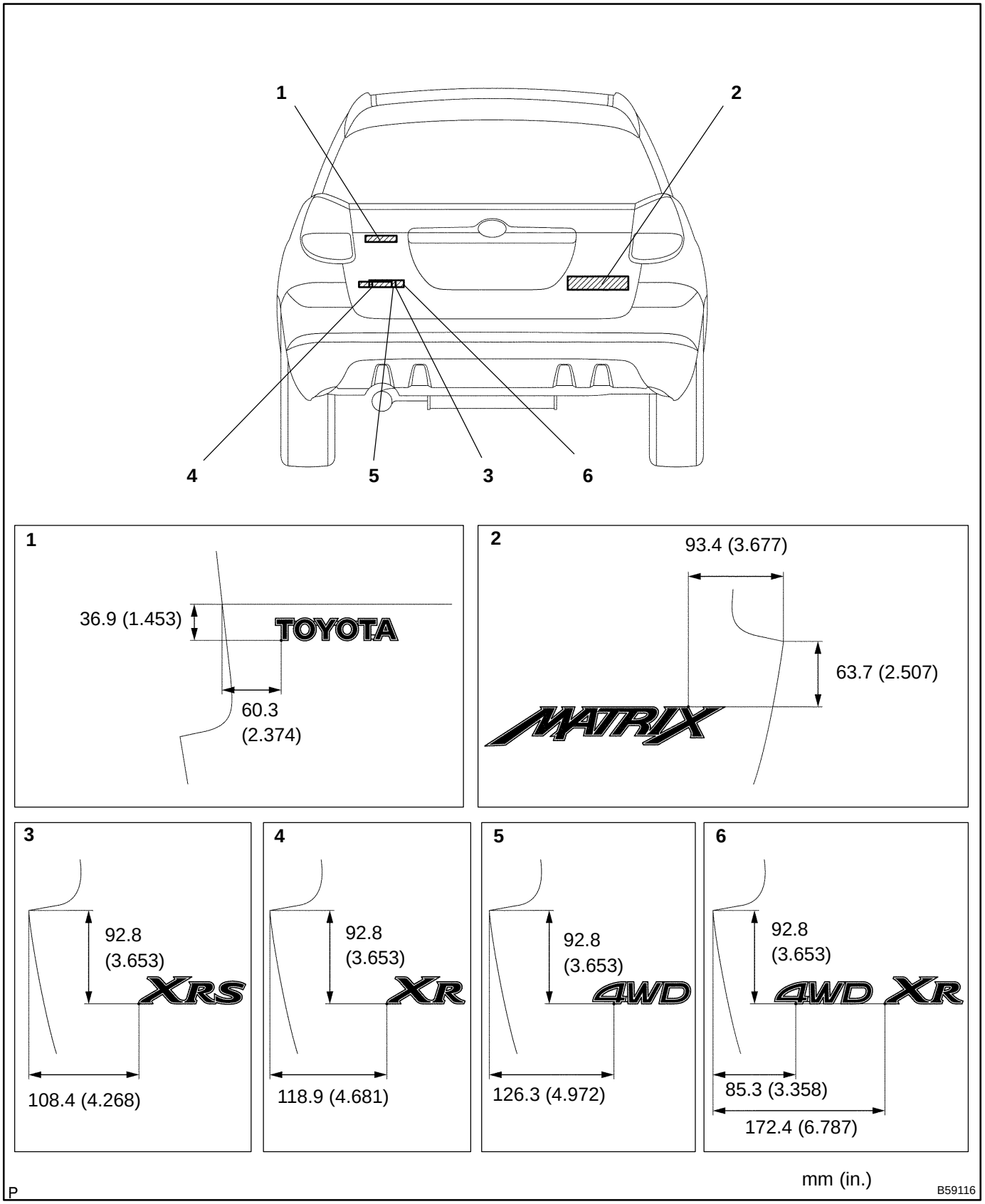

FRONT DOOR BELT MOULDING ASSY LH

760IH–01

REPLACEMENT

HINT:

- Installation is in the reverse order of the removal. But the installation is indicated only when it has a point.
- In the RH side, work in the same procedure as in the LH side.

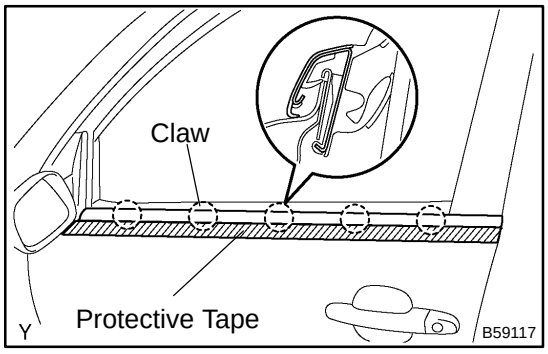

1. REMOVE FRONT DOOR BELT MOULDING ASSY LH

(a) Put protective tape under the front door belt moulding.

(b) Using a moulding remover or scraper, remove the front door belt moulding.

HINT:

Tape the scraper tip before use.

REAR DOOR BELT MOULDING ASSY LH

760II–01

REPLACEMENT

HINT:

- Installation is in the reverse order of the removal. But the installation is indicated only when it has a point.
- In the RH side, work in the same procedure as in the LH side.

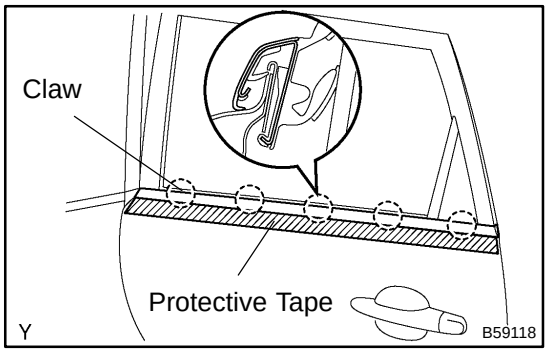

1. REMOVE REAR DOOR BELT MOULDING ASSY LH

(a) Put protective tape under the rear door belt moulding.

(b) Using a moulding remover or scraper, remove the rear door belt moulding.

HINT:

Tape the scraper tip before use.

ROOF DRIP SIDE FINISH MOULDING CENTER LH

760IJ–01

REPLACEMENT

HINT:

- Installation is in the reverse order of the removal. But the installation is indicated only when it has a point.
- In the RH side, work in the same procedure as in the LH side.

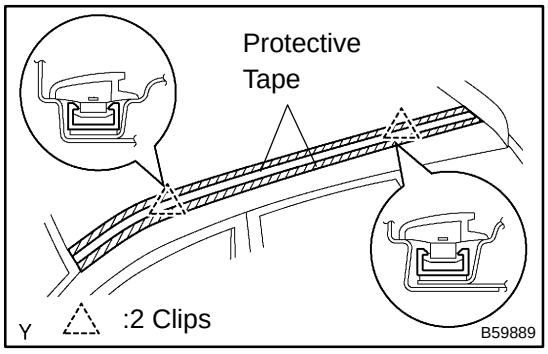

1. REMOVE ROOF DRIP SIDE FINISH MOULDING CENTER LH

(a) Put protective tape around the roof drip finish moulding.

(b) Using a screwdriver, disengage the clips of the roof drip finish moulding front end, and remove the moulding.

HINT:

Tape the screwdriver tip before use.

NOTICE:

- **Do not remove the clips.**
- **If the clips are damaged or removed accidentally, exchange them for new ones.**

2. INSTALL ROOF DRIP SIDE FINISH MOULDING CLIP NO.1

NOTICE:

Only when exchanging the clips.

(a) Remove the adhesive tape that remains on the moulding surface of the body, and then clean the surface with white gasoline.

(b) Heat up the clip and clip installation surfaces of the body with a heat light.

Body: 40 – 60˚C (104 – 140˚F)

Clip: 20 – 30˚C (68 – 86˚F)

NOTICE:

Do not heat the body and clip excessively.

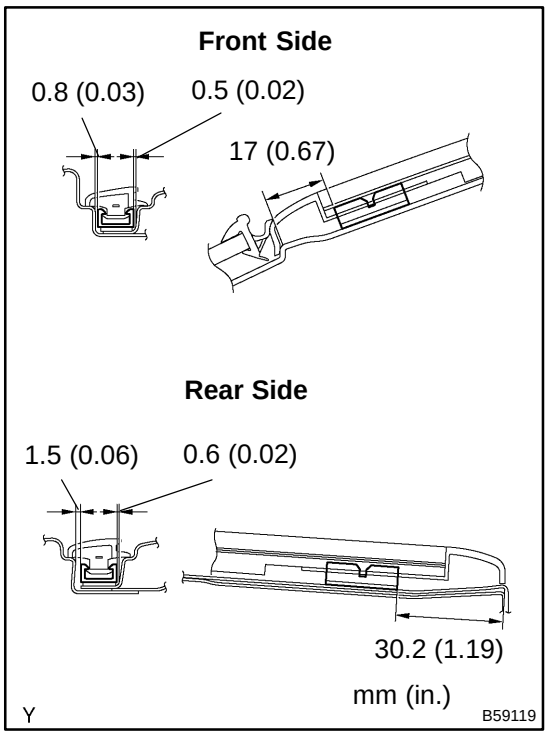

(c) Set the supplied clips into the positions as shown in the illustration, and then press–fit those clips by hand to install them.

(d) Install the moulding when 30 minutes or more have passed after press–fitting the clips.

HINT:

- Initial hardening time: 30 minutes
- Perfect hardening time: 24 hours

3. INSTALL ROOF DRIP SIDE FINISH MOULDING CENTER RH

(a) Install the roof drip side finish moulding.

(b) Tap on the moulding by hand.

FRONT BUMPER

COMPONENTS

760IA–01

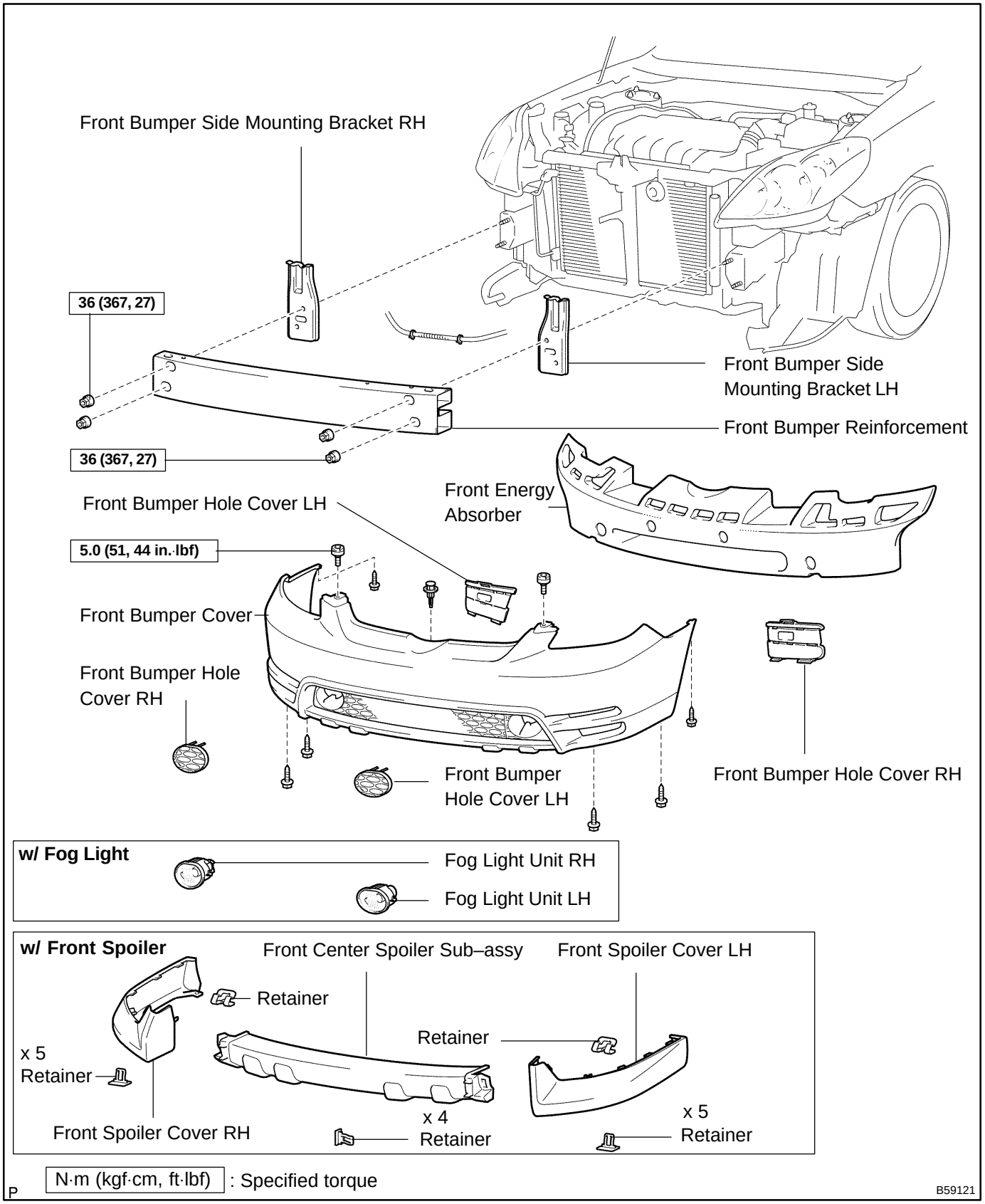

760IB–01

REPLACEMENT

HINT:

Installation is in the reverse order of the removal. But the installation is indicated only when it has a point.

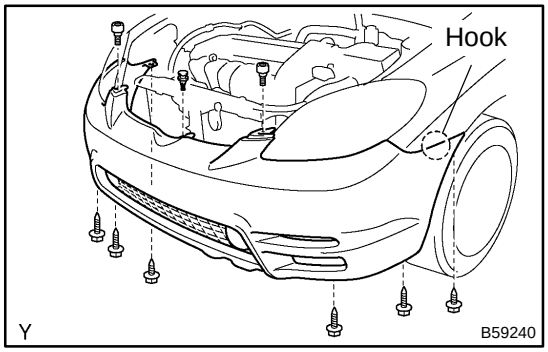

1. REMOVE FRONT BUMPER COVER

(a) Remove the 6 screws, 2 bolts and clip.

(b) Disengage the hook and remove the front bumper cover.

(c) w/ Fog light:
Disconnect the fog light connectors.

(d) Remove the front bumper hole cover LH and RH.

2. REMOVE FRONT BUMPER ENERGY ABSORBER

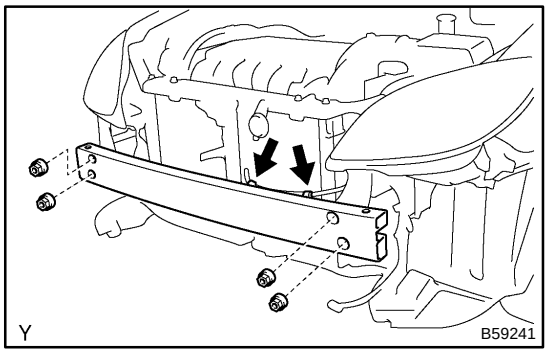

3. REMOVE FRONT BUMPER REINFORCEMENT

(a) Disconnect the 2 connector clamps.

(b) Remove the 4 nuts and front bumper reinforcement.

4. REMOVE FRONT BUMPER SIDE MOUNTING BRACKET LH

5. REMOVE FRONT BUMPER SIDE MOUNTING BRACKET RH

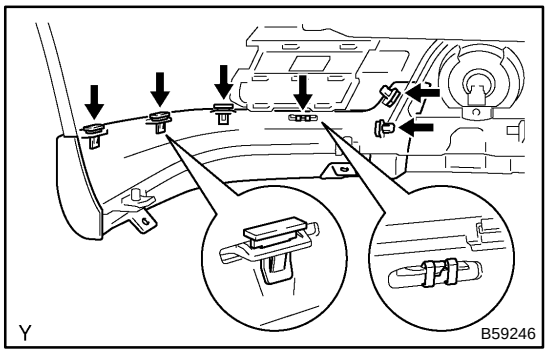

6. REMOVE FRONT SPOILER COVER LH (W/ FRONT SPOILER)

(a) Remove the 5 retainers.

(b) Disengage the clip and remove the front spoiler cover LH.

(c) Employ the same manner described above to the other side.

7. REMOVE FRONT SPOILER COVER RH (W/ FRONT SPOILER)

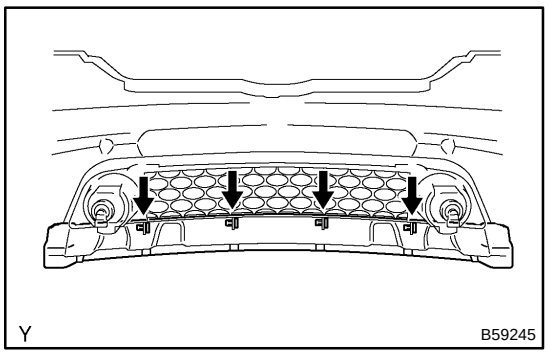

8. REMOVE FRONT CENTER SPOILER SUB–ASSY (W/ FRONT SPOILER)

(a) Remove the 4 retainers and front center spoiler.

9. REMOVE FOG LIGHT UNIT LH (W/ FOG LIGHT)

10. REMOVE FOG LIGHT UNIT RH (W/ FOG LIGHT)

11. REMOVE FRONT BUMPER HOLE COVER LH (W/O FOG LIGHT)

12. REMOVE FRONT BUMPER HOLE COVER RH (W/O FOG LIGHT)

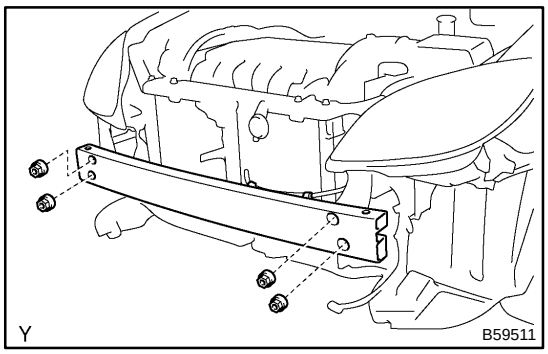

13. INSTALL FRONT BUMPER REINFORCEMENT

(a) Install the front bumper reinforcement with the 4 nuts.
Torque: 36 N·m (367 kgf·cm, 27 ft·lbf) for nuts

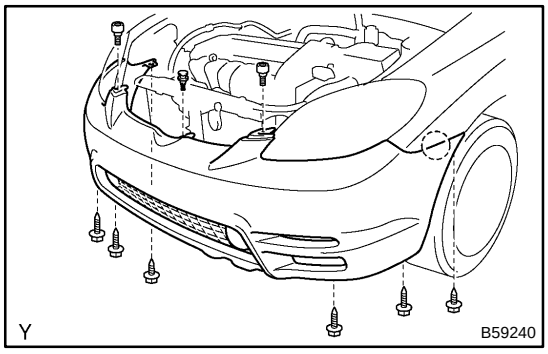

14. INSTALL FRONT BUMPER COVER

(a) Install the front bumper cover with the 6 screws, clip and 2 bolts.
Torque: 5.0 N·m (51 kgf·cm, 44 in.·lbf) for bolts

REAR BUMPER

COMPONENTS

760IC–01

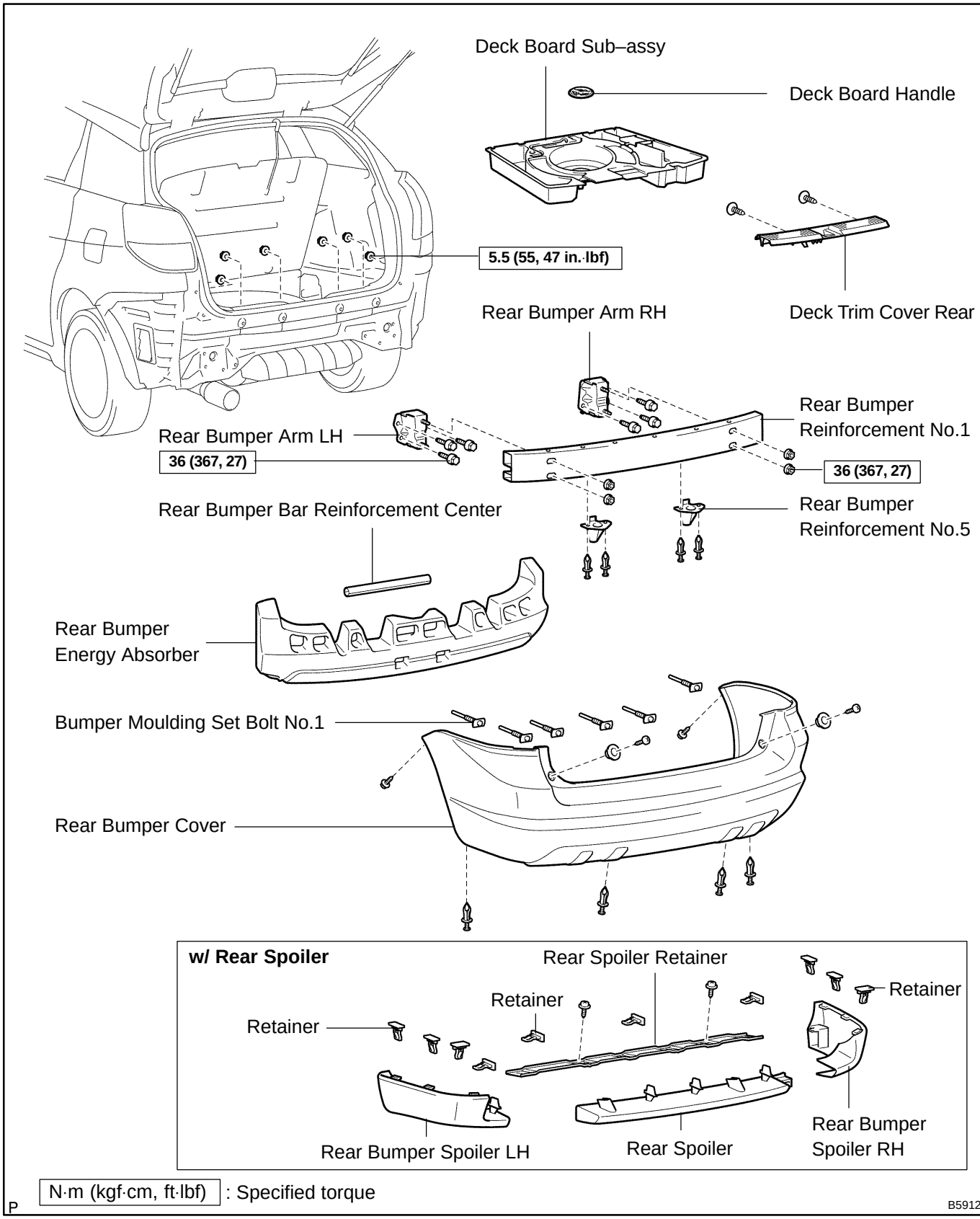

N·m (kgf·cm, ft·lbf) : Specified torque

P

B59122

760ID–01

REPLACEMENT

HINT:

Installation is in the reverse order of the removal. But the installation is indicated only when it has a point.

1. REMOVE DECK BOARD SUB–ASSY

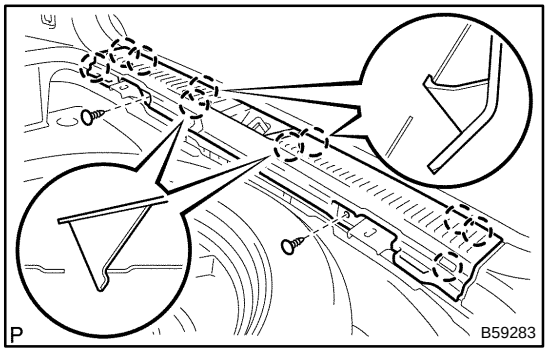

2. REMOVE DECK TRIM COVER REAR

(a) Remove the 2 clips.

(b) Using a moulding remover, remove the deck trim cover rear.

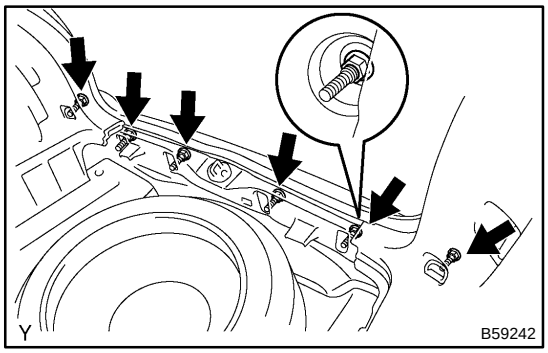

3. REMOVE REAR BUMPER COVER

(a) Remove the 6 nuts.

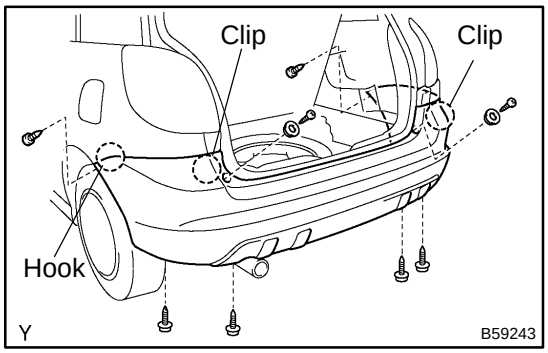

(b) Remove the 4 clips and 4 screws.

(c) Disengage the hook and clips, and remove the rear bumper cover.

4. REMOVE REAR BUMPER ENERGY ABSORBER

5. REMOVE REAR BUMPER BAR REINFORCEMENT CENTER

(a) Remove the rear bumper bar reinforcement from the rear bumper energy absorber.

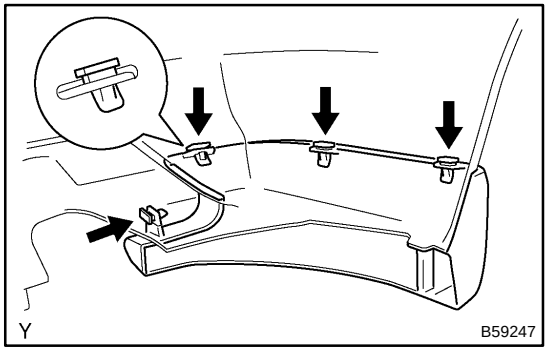

6. REMOVE REAR BUMPER SPOILER LH (W/ REAR SPOILER)

(a) Remove the 4 retainers and rear bumper spoiler LH.

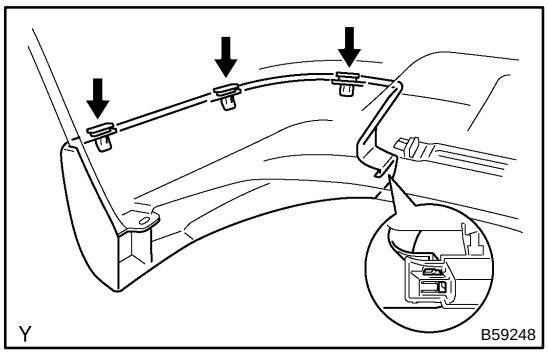

7. REMOVE REAR BUMPER SPOILER RH (W/ REAR SPOILER)

(a) Remove the 3 retainers.

(b) Disengage the hook and remove the rear bumper spoiler RH.

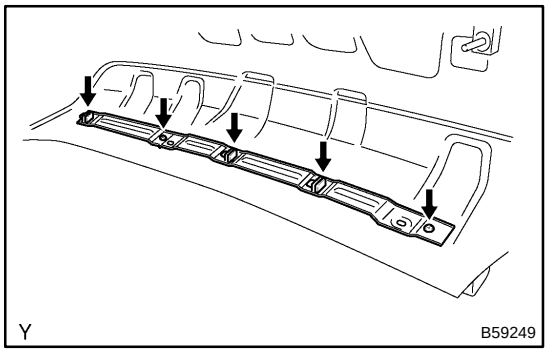

8. REMOVE REAR SPOILER (W/ REAR SPOILER)

(a) Remove the 3 retainers, 2 screws, rear spoiler retainer and rear spoiler.

9. REMOVE BUMPER MOULDING SET BOLT NO.1

10. REMOVE REAR BUMPER REINFORCEMENT NO.1

(a) Remove the 4 nuts and rear bumper reinforcement No.1.

11. REMOVE REAR BUMPER REINFORCEMENT NO.5

(a) Remove the 4 clips and 2 rear bumper reinforcements No.5 from the rear bumper reinforcement No.1.

12. REMOVE REAR BUMPER ARM LH

(a) Remove the 3 bolts and rear bumper arm LH.

(b) Employ the same manner described above to the other side.

13. INSTALL REAR BUMPER ARM LH

(a) Install the rear bumper arm LH with the 3 bolts.

Torque: 36 N·m (367 kgf·cm, 27 ft·lbf)

(b) Employ the same manner described above to the other side.

14. INSTALL REAR BUMPER REINFORCEMENT NO.1

(a) Install the rear bumper reinforcement No.1 with the 4 nuts.

Torque: 36 N·m (367 kgf·cm, 27 ft·lbf)

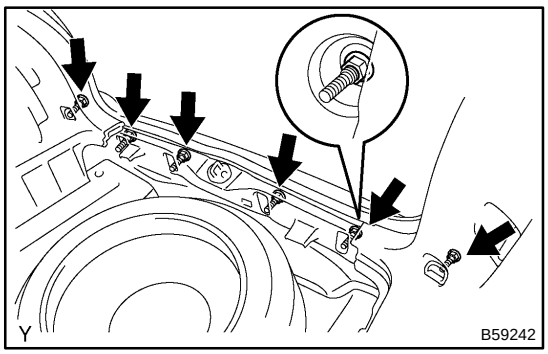

15. INSTALL REAR BUMPER COVER

(a) Install the rear bumper cover with the 4 clips, 4 screws and 6 nuts.

Torque: 5.5 N·m (55 kgf·cm, 47 in.·lbf) for nuts

SIDE MUDGUARD SUB–ASSY LH

760IE–01

REPLACEMENT

HINT:

- Installation is in the reverse order of the removal. But the installation is indicated only when it has a point.
- In the RH side, work in the same procedure as in the LH side.

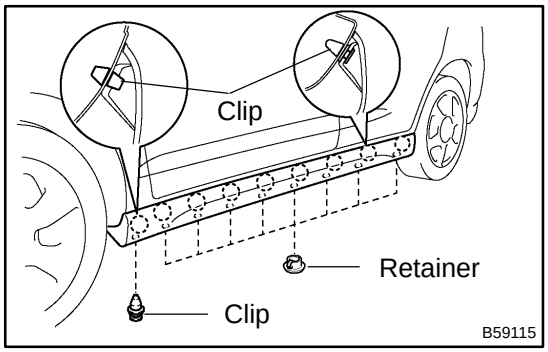

1. REMOVE SIDE MUDGUARD SUB–ASSY LH

(a) Remove the clip and 8 retainers.

(b) Using a screwdriver, remove the side mudguard.

HINT:

Tape the screwdriver tip before use.

(c) Remove the 9 clips from the side mudguard.

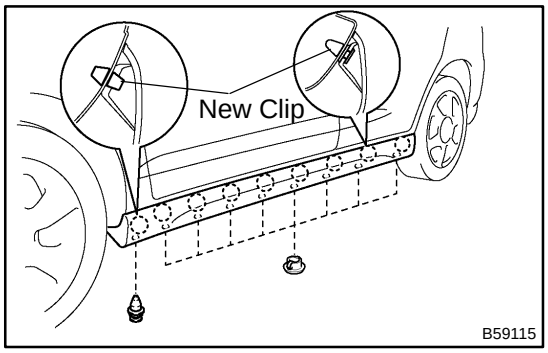

2. INSTALL SIDE MUDGUARD SUB–ASSY LH

(a) Install new 9 clips to the side mudguard.

ROOF HEADLINING ASSY

COMPONENTS

760IK–01

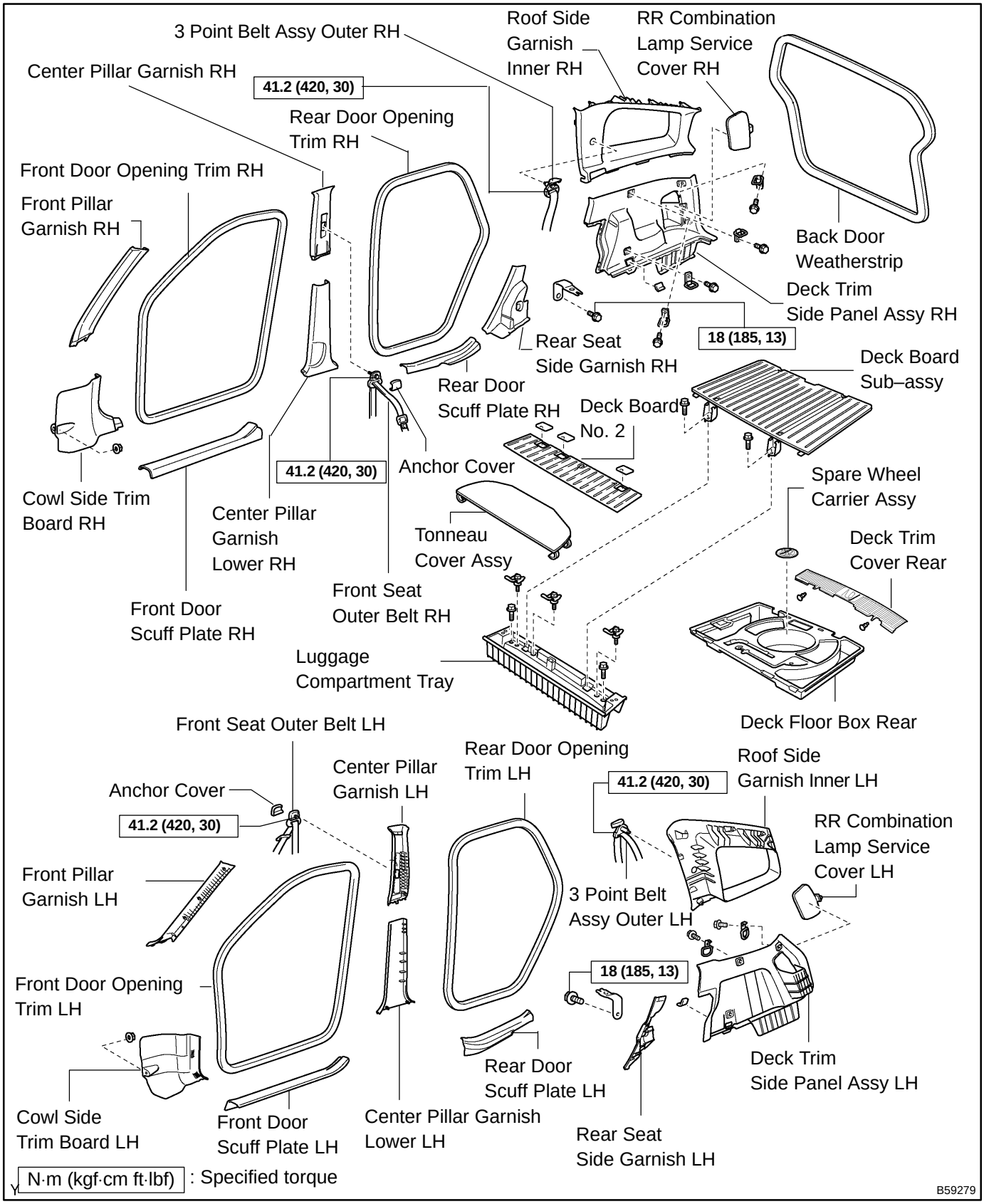

w/ Sliding Roof

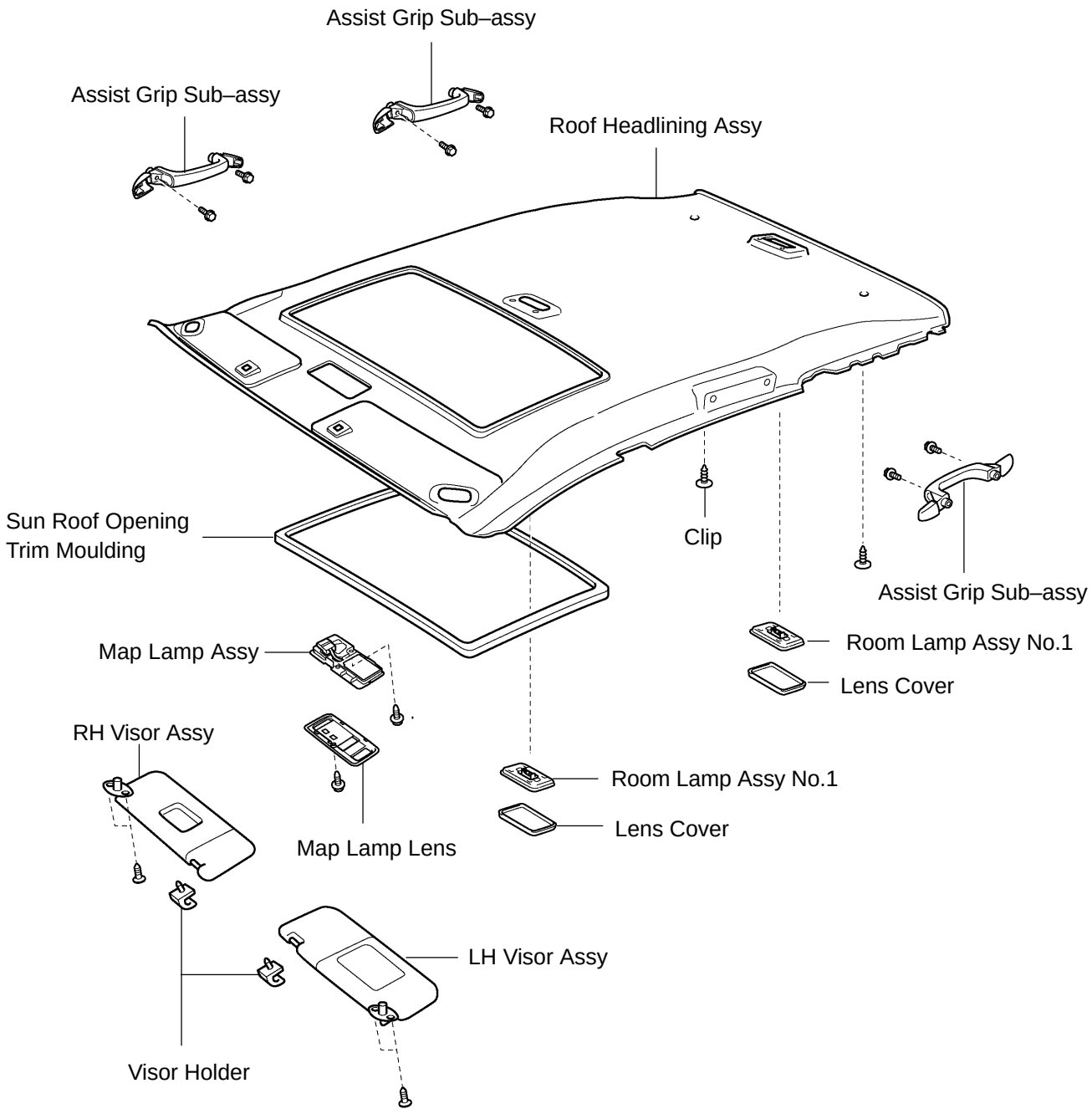

Y

B59280

w/o Sliding Roof

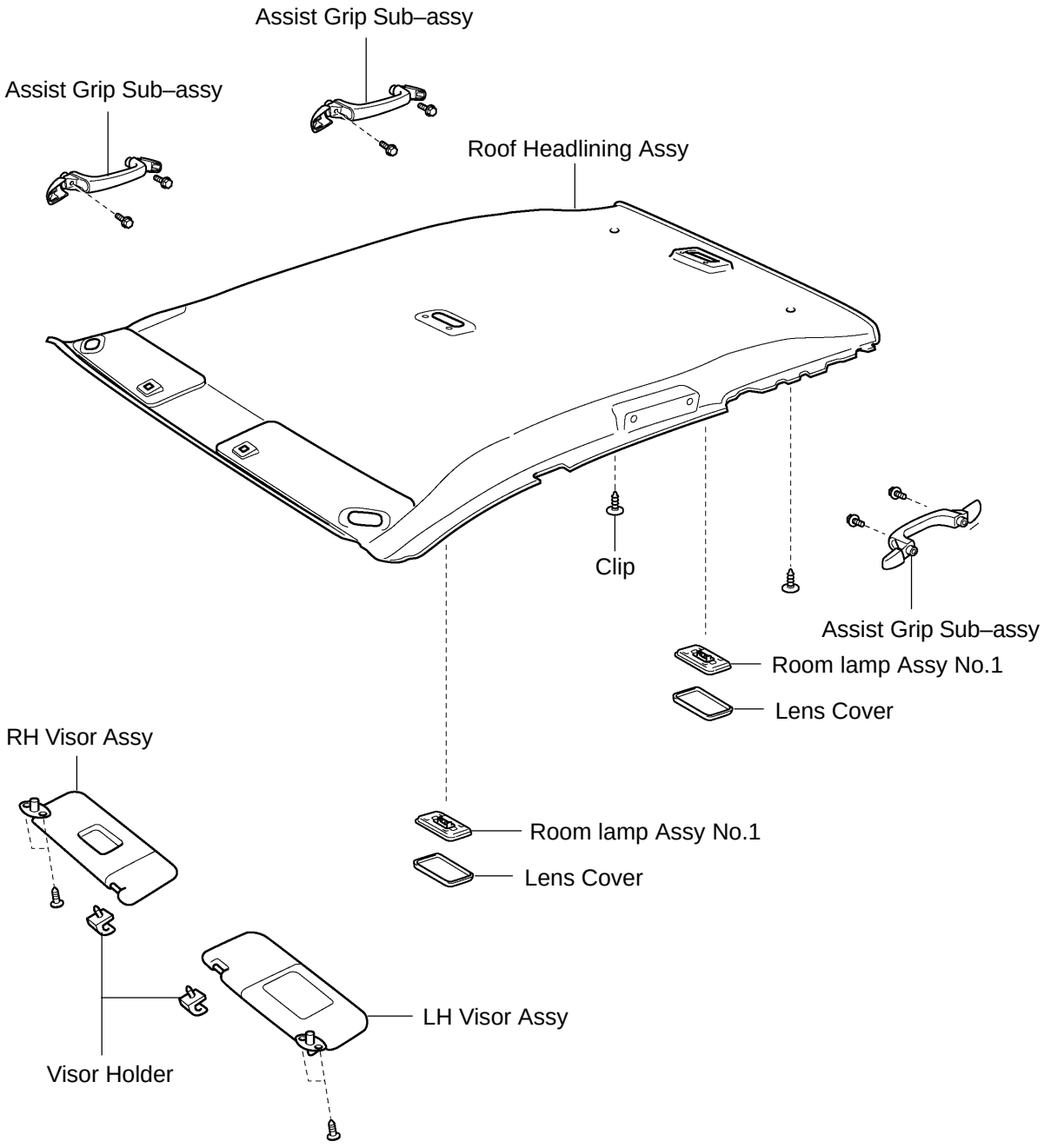

Y

B59626

REPLACEMENT

HINT:

Installtion is in the reverse order of the removal. But the installation is indicated only when it has a point.

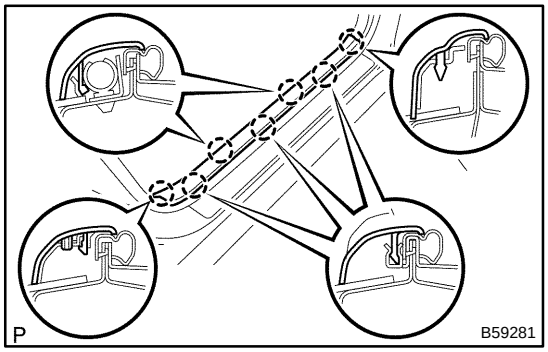

1. REMOVE FRONT DOOR SCUFF PLATE RH

(a) Using a screwdriver, remove the front door inside scuff plate.

HINT:

Tape the screwdriver tip before use.

(b) Employ the same manner described above to the other side.

2. REMOVE FRONT DOOR SCUFF PLATE LH

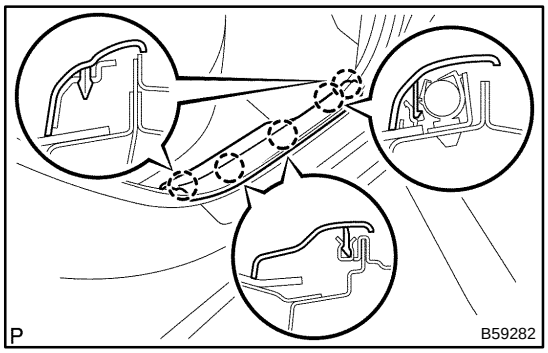

3. REMOVE REAR DOOR SCUFF PLATE RH

(a) Using a screwdriver, remove the rear door scuff plate RH.

HINT:

Tape the screwdriver tip before use.

(b) Employ the same manner described above to the other side.

4. REMOVE REAR DOOR SCUFF PLATE LH

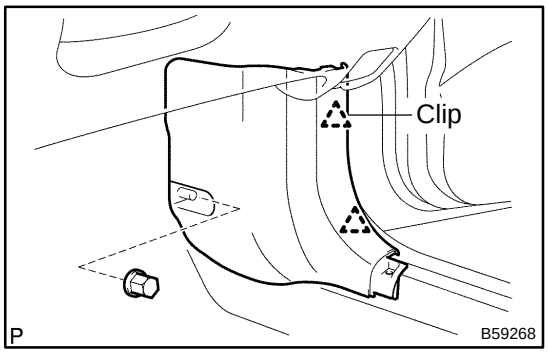

5. REMOVE COWL SIDE TRIM BOARD RH

(a) Remove the clip.

(b) Using a screwdriver, remove the cowl side trim board RH.

HINT:

Tape the screwdriver tip before use.

(c) Employ the same manner described above to the other side.

6. REMOVE COWL SIDE TRIM BOARD LH

7. REMOVE FRONT DOOR OPENING TRIM RH

8. REMOVE FRONT DOOR OPENING TRIM LH

9. REMOVE REAR DOOR OPENING TRIM RH

10. REMOVE REAR DOOR OPENING TRIM LH

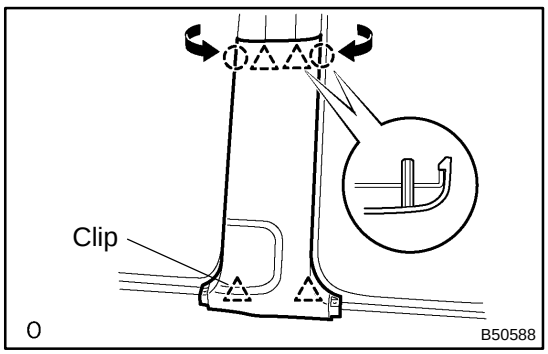

11. REMOVE CENTER PILLAR GARNISH LOWER RH

(a) Pull the center pillar garnish lower RH upward to remove it.

(b) Employ the same manner described above to the other side.

12. REMOVE CENTER PILLAR GARNISH LOWER LH

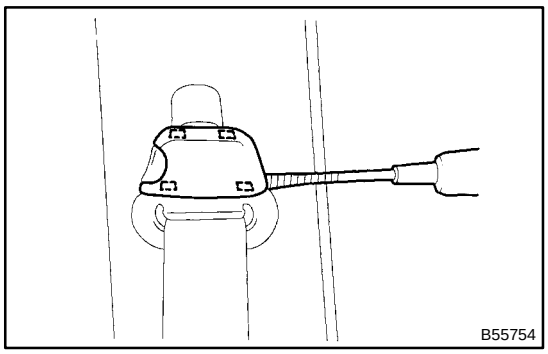

13. REMOVE CENTER PILLAR GARNISH RH

(a) Using a screwdriver, remove the shoulder anchor cover cap.

HINT:

Tape the screwdriver tip before use.

(b) Remove the bolt and disconnect the front seat outer belt (shoulder anchor side).

(c) Remove the bolt and disconnect the front seat outer belt (floor anchor side).

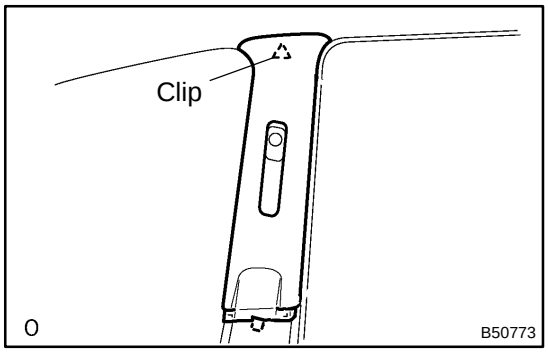

(d) Using a screwdriver, remove the center pillar upper garnish RH.

HINT:

Tape the screwdriver tip before use.

(e) Employ the same manner described above to the other side.

14. REMOVE CENTER PILLAR GARNISH LH

15. REMOVE DECK BOARD NO.2

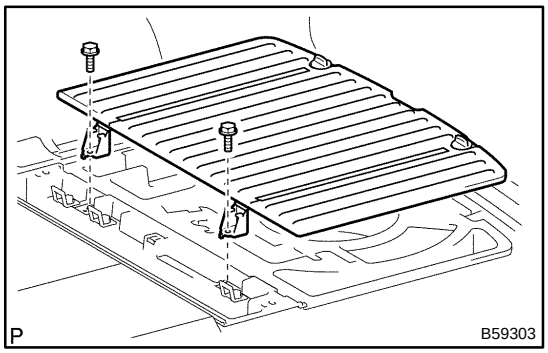

16. REMOVE DECK BOARD SUB–ASSY

(a) Remove the 2 bolts and deck board sub–assembly.

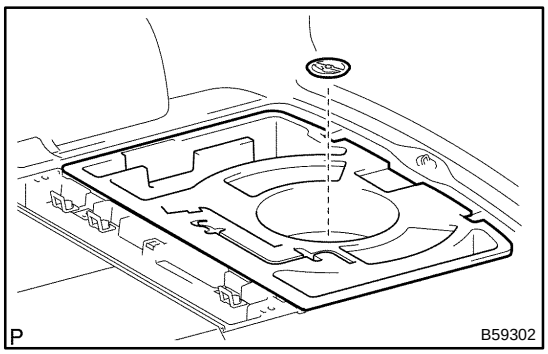

17. REMOVE DECK FLOOR BOX REAR

(a) Loosening the spare wheel carrier assembly, remove the deck floor box rear.

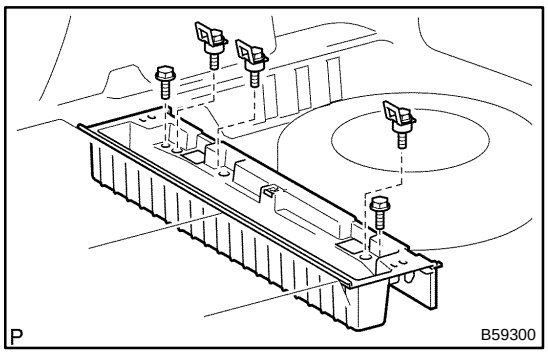

18. REMOVE LUGGAGE COMPARTMENT TRAY

(a) Remove the 5 bolts and luggage compartment tray.

19. REMOVE BACK DOOR WEATHERSTRIP

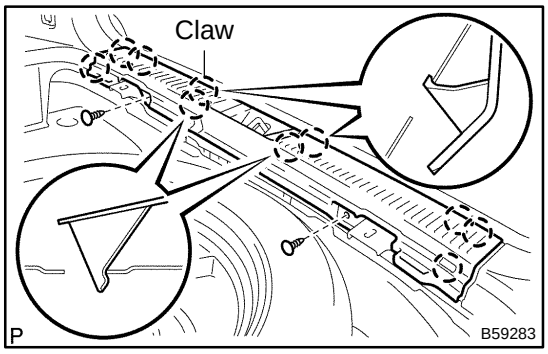

20. REMOVE DECK TRIM COVER REAR

(a) Remove the 2 clips.

(b) Using a moulding remover, remove the deck trim cover rear.

21. REMOVE TONNEAU COVER ASSY

22. REMOVE REAR SEAT CUSHION ASSY AND REAR SEAT BACK ASSY (See page 72–10)

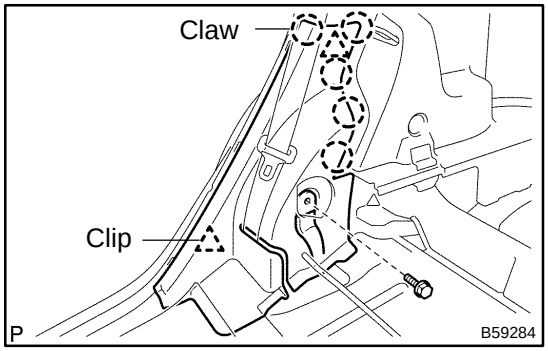

23. REMOVE REAR SEAT SIDE GARNISH RH

(a) Remove the bolt and seat back hinges.

(b) Using a screwdriver, remove the rear seat side garnish RH.

HINT:

Tape the screwdriver tip before use.

(c) Employ the same manner described above to the other side.

24. REMOVE REAR SEAT SIDE GARNISH LH

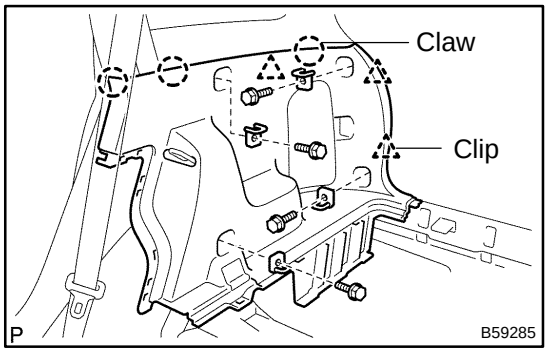

25. REMOVE DECK TRIM SIDE PANEL ASSY RH

(a) Remove the 4 bolts and 4 rope hooks.

(b) Using a screwdriver, remove the deck trim side panel assembly RH.

HINT:

Tape the screwdriver tip before use.

(c) Employ the same manner described above to the other side.

26. REMOVE DECK TRIM SIDE PANEL ASSY LH

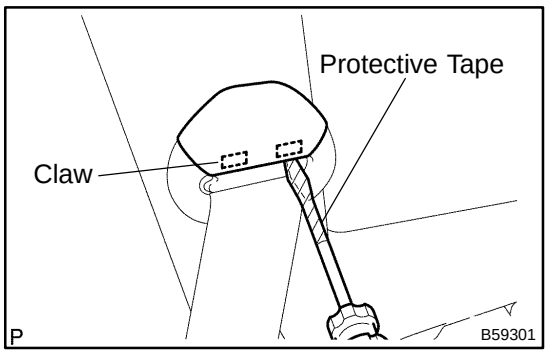

27. REMOVE ROOF SIDE GARNISH INNER RH

(a) Using a screwdriver, remove the seat belt anchor cover.

HINT:

Tape the screwdriver tip before use.

(b) Remove the bolt and rear seat 3 point belt assembly outer RH.

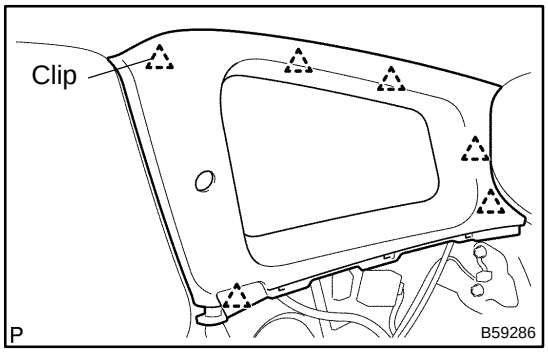

(c) Using a screwdriver, remove the roof side garnish inner RH.

HINT:

Tape the screwdriver tip before use.

(d) Employ the same manner described above to the other side.

28. REMOVE ROOF SIDE GARNISH INNER LH

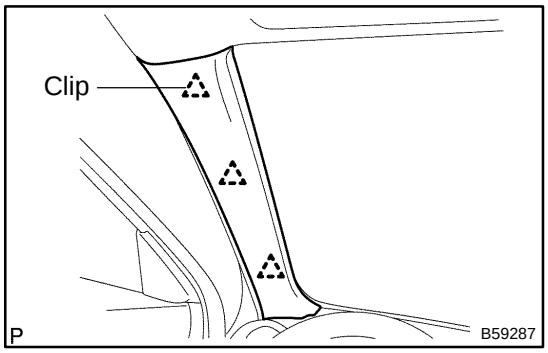

29. REMOVE FRONT PILLAR GARNISH RH

(a) Using a screwdriver, remove the front pillar garnish RH.

HINT:

Tape the screwdriver tip before use.

(b) Employ the same manner described above to the other side.

30. REMOVE FRONT PILLAR GARNISH LH

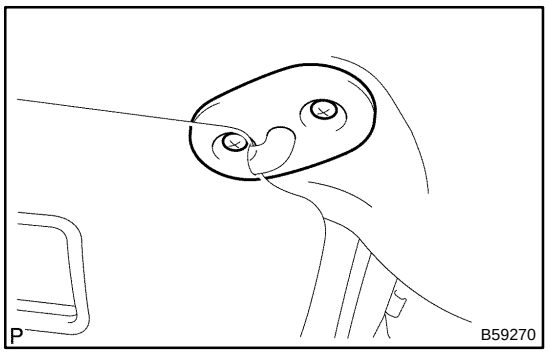

31. REMOVE RH VISOR ASSY

(a) Remove the 2 screws and RH visor assembly.

32. REMOVE LH VISOR ASSY

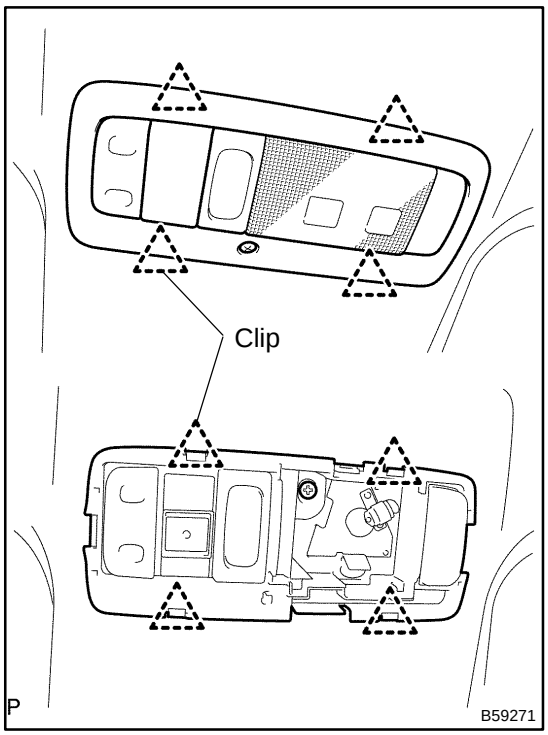

33. REMOVE MAP LAMP ASSY

(a) Remove the screw.

(b) Using a screwdriver, remove the map lamp lens and cover.

HINT:

Tape the screwdriver tip before use.

(c) Remove the screw.

(d) Using a screwdriver, remove the map lamp assembly.

HINT:

Tape the screwdriver tip before use.

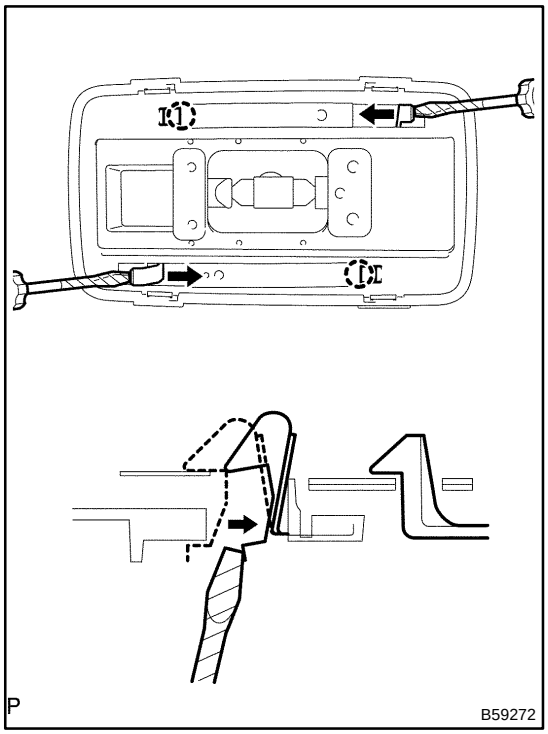

34. REMOVE ROOM LAMP ASSY NO.1

(a) Using a screwdriver, remove the lens cover.

(b) Using a screwdriver, remove the room lamp assembly No.1, as shown in the illustration.

HINT:

Tape the screwdriver tip before use.

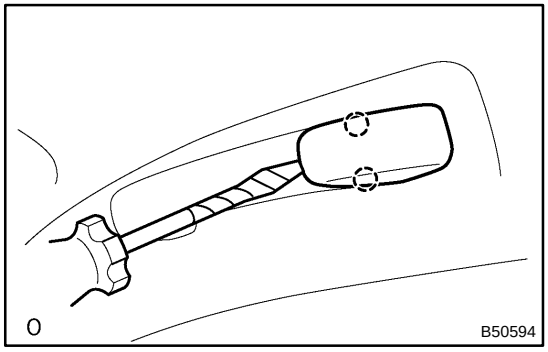

35. REMOVE ASSIST GRIP SUB–ASSY

(a) Using a screwdriver, remove the 2 assist grip covers.

(b) Remove the 2 screws and assist grip sub–assembly.

HINT:

Tape the screwdriver tip before use.

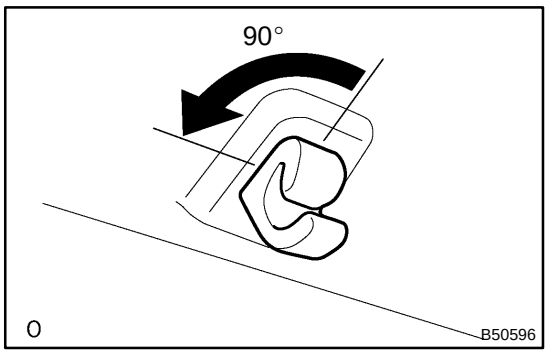

36. REMOVE VISOR HOLDER

(a) Remove the holder of the sun visor by turning it 90° counterclockwise.

37. REMOVE SUN ROOF OPENING TRIM MOULDING

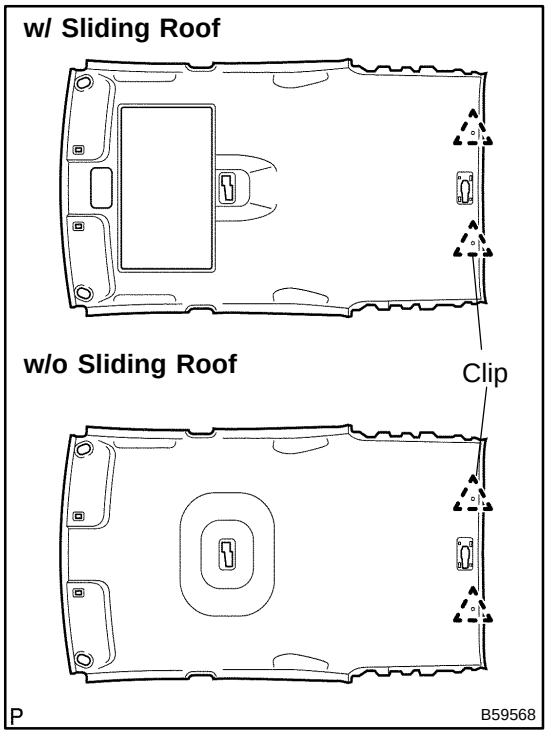

38. REMOVE ROOF HEADLINING ASSY

(a) Remove the 2 clips and roof headlining assembly.

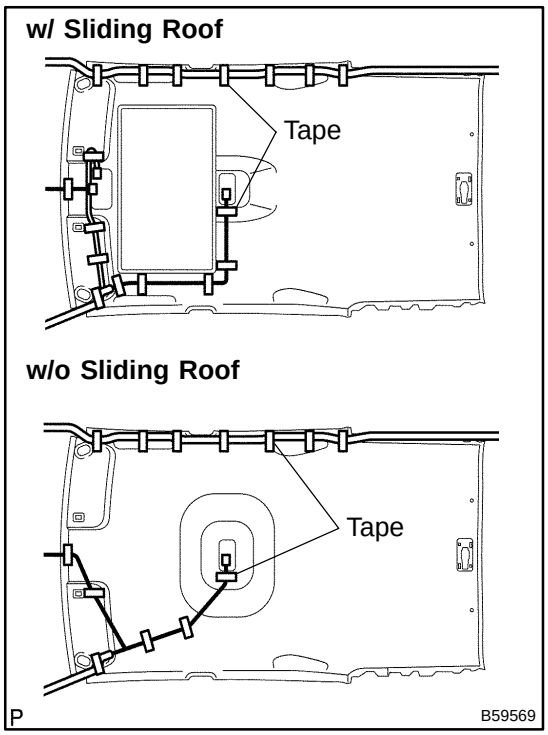

39. INSTALL ROOF HEADLINING ASSY

(a) Align the markings, and then install the wire harness with tape.

HINT:

Be careful for dirt or foreign objects not to stick to the adhered part when peeling off the double–stick tape.

(b) Attach the roof wire harness across the adhered part.

NOTICE:

Roof wire harness should be attached securely.

(c) Install the 2 clips.

40. INSTALL REAR SEAT CUSHION ASSY AND REAR SEAT BACK ASSY (See page 72–10)

8002Y–01

INSPECTION

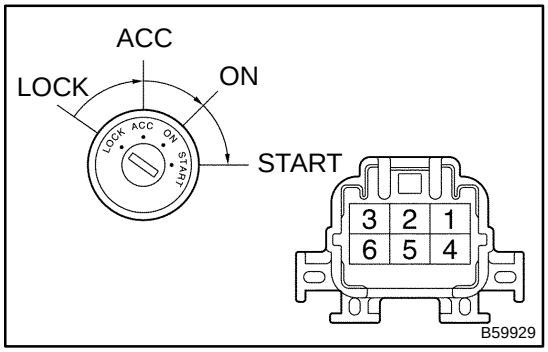

1. INSPECT IGNITION OR STARTER SWITCH ASSY

(a) Inspect the ignition switch continuity.

Standard:

Switch position	Terminal No.	Specified condition
LOCK	–	No continuity
ACC	1 ⇔ 3	Continuity
ON	1 ⇔ 2 ⇔ 3 5 ⇔ 6	Continuity
START	1 ⇔ 2 4 ⇔ 5 ⇔ 6	Continuity

If the result is not as specified, replace the switch.

IGNITION OR STARTER SWITCH ASSY

8002X–01

REPLACEMENT

1. REMOVE STEERING COLUMN COVER (See page 50–8)

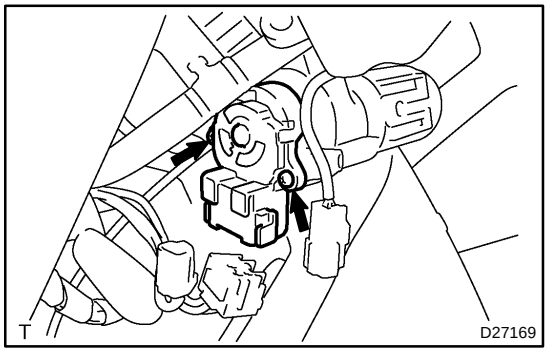

2. REMOVE IGNITION OR STARTER SWITCH ASSY

(a) Disconnect the ignition switch connector and unlock warning switch connector.

(b) Remove the 2 clamps.

(c) Remove the 2 screws and ignition switch.

CRUISE CONTROL ECU ASSY

82029–01

REPLACEMENT

1. **REMOVE METER HOOD SUB–ASSY(See page 71–18)**
2. **REMOVE COMBINATION METER ASSY(See page 71–18)**

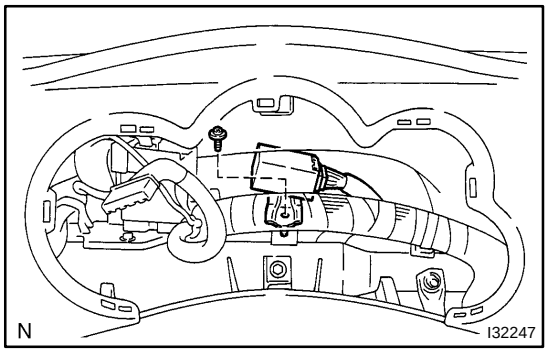

3. **REMOVE CRUISE CONTROL ECU ASSY**

(a) Disconnect the connector.

(b) Remove the screw and cruise control ECU assy.

CRUISE CONTROL ACTUATOR ASSY

82028–01

REPLACEMENT

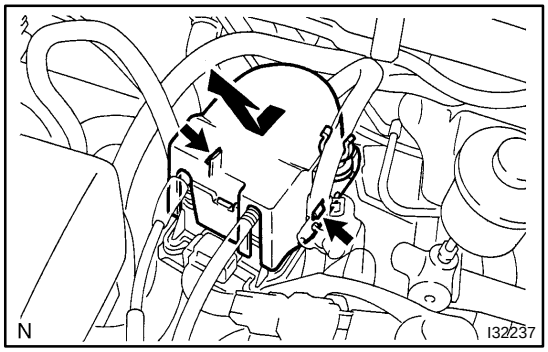

1. REMOVE CRUISE CONTROL ACTUATOR COVER

(a) Disengage the 2 claws, then remove the cruise control actuator cover.

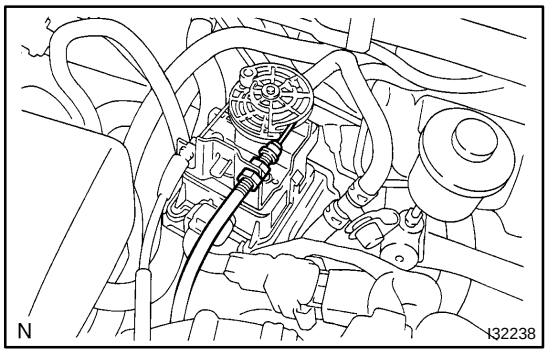

2. SEPARATE ACCELERATOR CONTROL CABLE ASSY

(a) Loosen the double nut and separate the accelerator control cable assy.

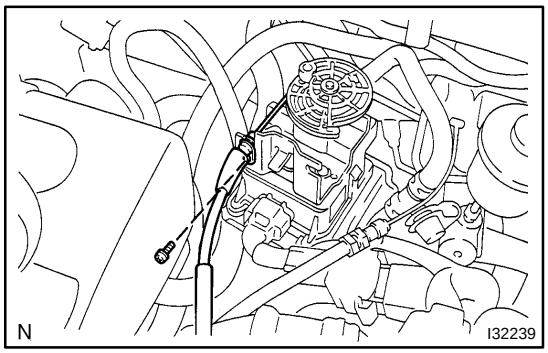

3. SEPARATE ACCELERATOR AUTO DRIVE CABLE ASSY

(a) Remove the screw and separate the accelerator auto drive cable assy.

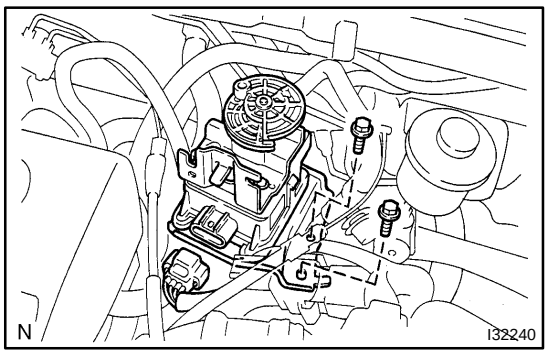

4. REMOVE CRUISE CONTROL ACTUATOR ASSY

(a) Disconnect the connector.

(b) Remove the 2 bolts and cruise control actuator assy.
Torque: 6.0 N·m (60 kgf·cm, 52 in.·lbf)

CLUTCH SWITCH ASSY

82027–01

REPLACEMENT

1. REMOVE CLUTCH SWITCH ASSY

(a) Disconnect the connector.

(b) Loosen the nut and remove clutch the switch assy.

CRUISE CONTROL MAIN SWITCH ASSY

8202A–01

REPLACEMENT

1. **DISCONNECT BATTERY NEGATIVE TERMINAL**
2. **INSPECT PLACE FRONT WHEELS FACING STRAIGHT AHEAD**
3. **REMOVE HORN BUTTON ASSY(See page 60–13)**
4. **REMOVE STEERING WHEEL ASSY(See page 50–8)**
   SST 09950–50013 (09951–05010, 09952–05010, 09953–05020, 09954–05021)

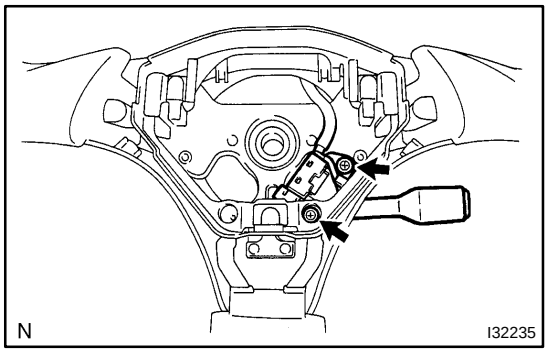

5. **REMOVE CRUISE CONTROL MAIN SWITCH ASSY**
   (a) Remove the 2 screws and cruise control main switch assy.

6. **CENTER SPIRAL CABLE(See page 50–8)**
7. **INSTALL STEERING WHEEL ASSY(See page 50–8)**
8. **INSPECT STEERING WHEEL CENTER POINT(See page 50–8)**
9. **INSPECT HORN BUTTON ASSY(See page 60–13)**
10. **INSTALL HORN BUTTON ASSY(See page 60–13)**
11. **INSPECT SRS WARNING LIGHT(See page 05–543)**

CRUISE CONTROL SYSTEM

ON–VEHICLE INSPECTION

8202B–01

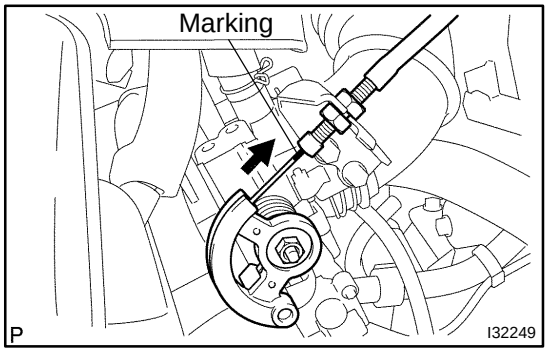

1. CHECK PLAY OF ACCELERATOR AUTO DRIVE CABLE ASSY (1ZZ–FE)

(a) Push the wire into the cable so as not to move the throttle link and put a mark on the position shown in the illustration.

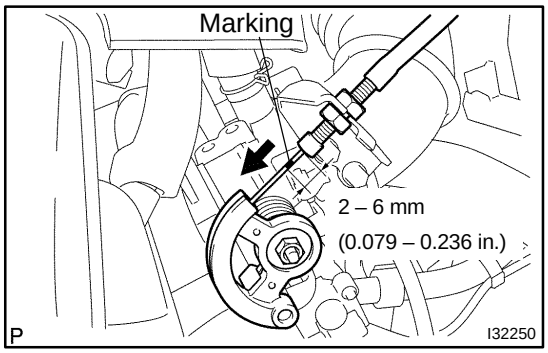

(b) Pull the wire and check the moved distance of the mark.

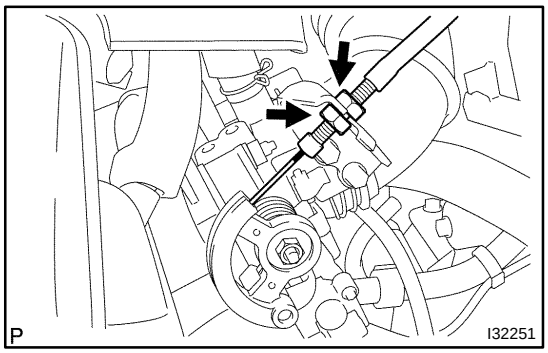

2. ADJUST PLAY IN ACCELERATOR AUTO DRIVE CABLE ASSY (1ZZ–FE)

(a) Changing the double nut position shown by the arrows, adjust the play to the standard value.
Standard: 2 – 6 mm (0.079 – 0.236 in.)

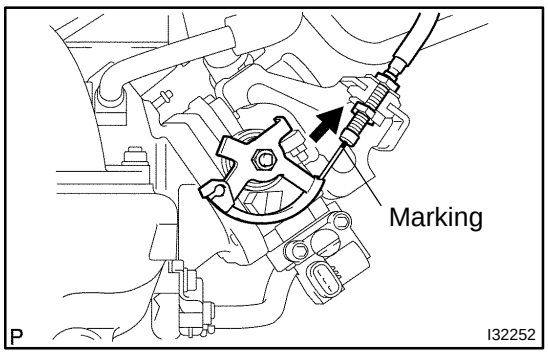

3. CHECK PLAY OF ACCELERATOR AUTO DRIVE CABLE ASSY (2ZZ–GE)

(a) Push the wire into the cable so as not to move the throttle link and put a mark on the position shown in the illustration.

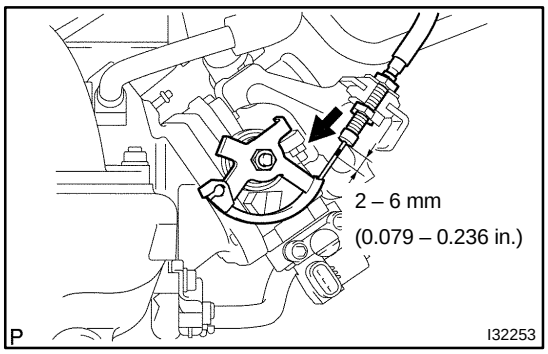

(b) Pull the wire and check the moved distance of the mark.

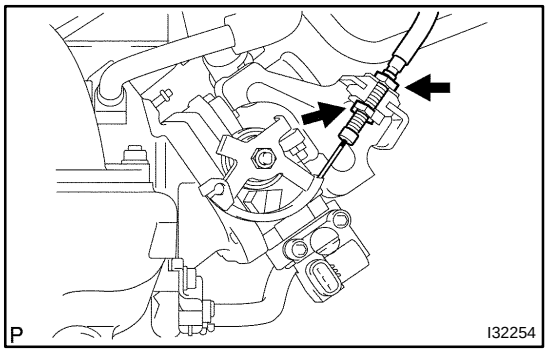

4. ADJUST PLAY IN ACCELERATOR AUTO DRIVE CABLE ASSY (2ZZ–GE)

(a) Changing the double nut position shown by the arrows, adjust the play to the standard value.
Standard: 2 – 6 mm (0.079 – 0.236 in.)

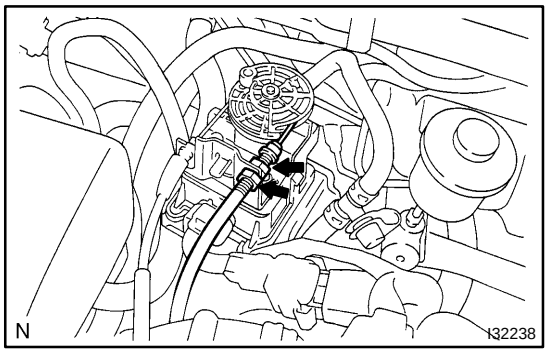

5. ADJUST PLAY IN ACCELERATOR CONTROL CABLE ASSY

(a) Remove the cruise control actuator cover and adjust the play in the accelerator control cable assy by changing the double nut position.

OUTSIDE VEHICLE

9900V–05

GENERAL MAINTENANCE

HINT:

These are maintenance and inspection items which are considered to be the owner's responsibility.
They can be done by the owner or they can have them done at a service shop.
These items include those which should be checked on a daily basis, those which, in most cases, do not require special tools and those which are considered to be reasonable for the owner to do.
Items and procedures for general maintenance are as follows.

1. GENERAL NOTES

- Maintenance items may vary from country to country. Check the owner's manual supplement in which the maintenance schedule is shown.
- Every service item in the periodic maintenance schedule must be performed.
- Periodic maintenance service must be performed according to whichever interval in the periodic maintenance schedule occurs first, the odometer reading (miles) or the time interval (months).
- Maintenance service after the last period should be performed at the same interval as before unless noted.
- Failure to do even one of the items can cause the engine to run poorly and increase the exhaust emissions.

2. TIRES

(a) Check the pressure with a gauge. If necessary, make adjustment.
(b) Check for cuts, damage or excessive wear.

3. WHEEL NUTS

(a) When checking the tires, check the nuts for looseness or for missing nuts. If necessary, tighten them.

4. TIRE ROTATION

(a) Check the owner's manual supplement in which the maintenance schedule is shown.

5. WINDSHIELD WIPER BLADES

(a) Check for wear or cracks whenever they do not wipe clean. If necessary, replace them.

6. FLUID LEAKS

(a) Check the underneath of the vehicle for leaking fuel, oil, water or other fluid.
(b) If you smell gasoline fumes or notice any leak, find and correct the cause.

7. DOORS AND ENGINE HOOD

(a) Check that all the doors and the tailgate operate smoothly, and that all the latches lock securely.
(b) Check that the engine hood secondary latch prevents the hood from opening when the primary latch is released.

INSIDE VEHICLE

GENERAL MAINTENANCE

9900W–05

HINT:

These are maintenance and inspection items which are considered to be the owner's responsibility.
They can be done by the owner or they can have them done at a service shop.
These items include those which should be checked on a daily basis, those which, in most cases, do not require special tools and those which are considered to be reasonable for the owner to do.
Items and procedures for general maintenance are as follows.

1. GENERAL NOTES

- Maintenance items may vary from country to country. Check the owner's manual supplement in which the maintenance schedule is shown.
- Every service item in the periodic maintenance schedule must be performed.
- Periodic maintenance service must be performed according to whichever interval in the periodic maintenance schedule occurs first, the odometer reading (miles) or the time interval (months).
- Maintenance service after the last period should be performed at the same interval as before unless noted.
- Failure to do even one of the items can cause the engine to run poorly and increase the exhaust emissions.

2. LIGHTS

(a) Check that the headlights, stop lights, taillights, turn signal lights, and other lights are all working.
(b) Check the headlight aiming.

3. WARNING LIGHTS AND BUZZERS

(a) Check that all the warning lights and buzzers function properly.

4. HORN

(a) Check that the horn works normally.

5. WINDSHIELD GLASS

(a) Check for scratches, pits or abrasions.

6. WINDSHIELD WIPER AND WASHER

(a) Check the operation of the wipers and washer.
(b) Check that the wipers do not streak.

7. WINDSHIELD DEFROSTER

(a) Check that air comes out from the defroster outlet when operating the heater or air conditioner in the defroster mode.

8. REAR VIEW MIRROR

(a) Check that the rear view mirror is mounted securely.

9. SUN VISORS

(a) Check that the sun visors move freely and are mounted securely.

10. STEERING WHEEL

(a) Check that the steering wheel has the specified freeplay. Be alert for changes in steering condition, such as hard steering, excessive freeplay or strange noises.

11. SEATS

(a) Check that all the front seat controls such as seat adjusters, seatback recliner, etc. operate smoothly.
(b) Check that all the latches lock securely in any position.
(c) Check that the locks hold securely in any latched position.
(d) Check that the head restraints move up and down smoothly and that the locks hold securely in any latched position.
(e) For folding–down of the rear seatbacks, check that the latches lock securely.

12. SEAT BELTS

(a) Check that the seat belt system such as the buckles, retractors and anchors operate properly and smoothly.

(b) Check that the belt webbing is not cut, frayed, worn or dameged.

13. ACCELERATOR PEDAL

(a) Check the pedal for smooth operation, uneven pedal effort or catching.

14. CLUTCH PEDAL (See page 42–2)

(a) Check the pedal for smooth operation.

(b) Check that the pedal has the proper freeplay.

15. BRAKE PEDAL (See page 32–8)

(a) Check the pedal for smooth operation.

(b) Check that the pedal has the proper reserve distance and freeplay.

(c) Check the brake booster function.

16. BRAKES

(a) At a safe place, check that the brakes do not pull to one side when applied.

17. PARKING BRAKE (See page 33–4)

(a) Check that the lever has the proper travel.

(b) On a safe incline, check that the vehicle is held securely with only the parking brake applied.

18. AUTOMATIC TRANSMISSION ”PARK” MECHANISM

(a) On a safe incline, check that the vehicle is held securely with the selector lever in the ”P” position and all the brakes released.

UNDER HOOD

9900X–05

GENERAL MAINTENANCE

1. GENERAL NOTES

- Maintenance items may vary from country to country. Check the owner's manual supplement in which the maintenance schedule is shown.
- Every service item in the periodic maintenance schedule must be performed.
- Periodic maintenance service must be performed according to whichever interval in the periodic maintenance schedule occurs first, the odometer reading (miles) or the time interval (months).
- Maintenance service after the last period should be performed at the same interval as before unless noted.
- Failure to do even one of the items can cause the engine to run poorly and increase the exhaust emissions.

2. WINDSHIELD WASHER FLUID

(a) Check that there is sufficient fluid in the tank.

3. ENGINE COOLANT LEVEL

(a) Check that the coolant level is between the "FULL" and "LOW" lines on the see–through reservoir.

4. RADIATOR AND HOSES

(a) Check that the front of the radiator is clean and not blocked by leaves, dirt or bugs.

(b) Check the hoses for cracks, kinks, rot or loose connections.

5. BATTERY ELECTROLYTE LEVEL

(a) Check that the electrolyte level of all the battery cells is between the upper and lower level lines on the case.

6. BRAKE FLUID LEVEL

(a) Check that the brake fluid levels are near the upper level line on the see–through reservoirs.

7. ENGINE DRIVE BELT

(a) Check the drive belt for fraying, cracks, wear or oiliness.

8. ENGINE OIL LEVEL

(a) Check the level on the dipstick with the engine turned off.

9. POWER STEERING FLUID LEVEL

(a) Check the level on the dipstick.

(b) The level should be in the "HOT" or "COLD" range depending on the fluid temperature.

10. AUTOMATIC TRANSMISSION FLUID LEVEL

(a) Park the vehicle on a level surface.

(b) With the engine idling and the parking brake applied, shift the selector into all the positions from "P" to "L", and then shift into the "P" position.

(c) Pull out the dipstick and wipe off the fluid with a clean shop rag. Re–insert the dipstick and check that the fluid level is in the "HOT" range.

(d) Perform this check with the fluid at the normal driving temperature (70 – 80˚C, 158 – 176˚F).

HINT:

Wait until the engine cools down (approx. 30 min.) before checking the fluid level after extended driving at high speed, in hot weather, in heavy traffic or pulling a trailer.

11. EXHAUST SYSTEM

(a) If any change in the sound of the exhaust or the smell of the exhaust fumes is noticed, locate and correct the cause.

ENGINE

ON–VEHICLE INSPECTION

9900Y–05

HINT:

Inspect these items when the engine is cold.

1. INSPECT DRIVE BELT (See page 19–12)

2. REPLACE SPARK PLUGS (1ZZ–FE: See page 18–1, 2ZZ–GE: See page 18–4)

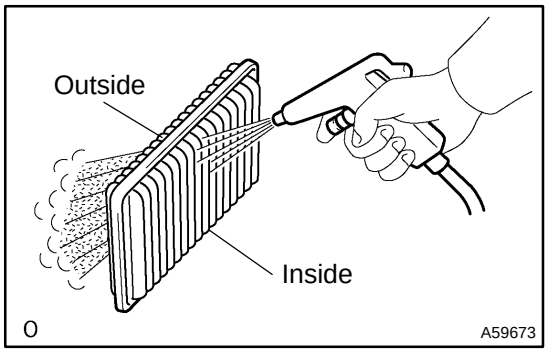

3. INSPECT AIR FILTER

(a) Remove the air filter.

(b) Visually check that the air filter is not excessively damaged or oily.

If necessary, replace the air filter.

(c) Clean the filter with compressed air.

First blow from the inside thoroughly, and then blow from the outside of the filter.

(d) Reinstall the air filter.

4. REPLACE AIR FILTER

(a) Replace the air filter with a new one.

5. REPLACE ENGINE OIL AND OIL FILTER (1ZZ–FE: See page 17–10, 2ZZ–GE: See page 17–22)

6. REPLACE ENGINE COOLANT (See page 16–6)

7. INSPECT GASKET IN FUEL TANK CAP (1ZZ–FE: See page 12–1, 2ZZ–GE: See page 12–13)

8. INSPECT FUEL LINES AND CONNECTIONS, FUEL TANK VAPOR VENT SYSTEM HOSES AND FUEL TANK BANDS

(a) Visually check the fuel lines for cracks, leakage, loose connections, deformation or tank band looseness.

9. INSPECT EXHAUST PIPES AND MOUNTINGS

(a) Visually check the pipes, hangers and connections for severe corrosion, leaks or damage.

10. INSPECT VALVE CLEARANCE (1ZZ–FE: See page 14–5, 2ZZ–GE: See page 14–179)

BRAKE

ON–VEHICLE INSPECTION

9900Z–05

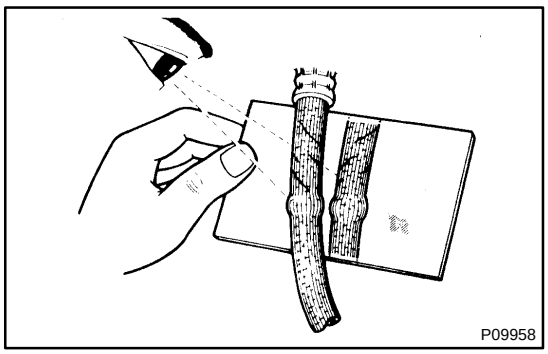

1. INSPECT BRAKE LINE PIPES AND HOSES

HINT:

Check in a well–lighted area. Check the entire circumference and length of the brake hoses using a mirror as required. Turn the front wheels fully right or left before checking the front brake.

(a) Check all the brake lines and hoses for:
- Damage
- Wear
- Deformation
- Cracks
- Corrosion
- Leaks
- Bends
- Twists

(b) Check all the clamps for tightness and connections for leakage.

(c) Check that the hoses and lines are clear of sharp edges, moving parts and the exhaust system.

(d) Check that the lines install in grommets pass through the center of the grommets.

2. INSPECT FRONT BRAKE PADS AND DISCS (See page 32–27)

3. INSPECT REAR BRAKE PADS AND DISCS (See page 32–49)

4. INSPECT REAR BRAKE LININGS AND DRUMS
(1ZZ–FE (FF): See page 32–33, 1ZZ–FE (4WD): See page 32–41)

5. INSPECT OR CHANGE BRAKE FLUID (See page 32–6)
Fluid: SAE J1703 or FMVSS No.116 DOT3

CHASSIS

9901A–03

ON–VEHICLE INSPECTION

1. INSPECT STEERING LINKAGE

(a) Check the steering wheel freeplay (See page 50–3).

(b) Check the steering linkage for looseness or damage.

(1) Check that the tie rod ends do not have excessive play.

(2) Check that the dust seals and boots are not damaged.

(3) Check that the boot clamps are not loose.

2. INSPECT STEERING GEAR HOUSING OIL

(a) Check the steering gear housing for oil leakage.

If leakage is found, check and repair the cause.

3. INSPECT BALL JOINTS AND DUST COVERS

(a) Inspect the ball joints for excessive looseness.

(1) Jack up the front of the vehicle and place wooden blocks with a height of 180 – 200 mm (7.09 – 7.87 in.) under the front tires.

(2) Lower the jack until there becomes about half a load on the front coil spring. Place stands under the vehicle for safety.

(3) Check that the front wheels are pointing straight ahead, and block them with chocks.

(4) Using a lever, pry up the end of the lower arm, and check the amount of play.

Maximum ball joint vertical play: 0 mm (0 in.)

If there is any play, replace the ball joint.

(b) Check the dust cover for damage.

4. INSPECT DRIVE SHAFT BOOTS

(a) Check the drive shaft boots for clamp looseness, oil leakage or damage.

5. CHECK TRANSAXLE OIL (FLUID)

(a) Visually check the transaxle for oil (fluid) leakage.

If leakage is found, check and repair the cause.

6. 4WD:

CHECK AND REPLACE TRANSFER OIL (See page 31–3)

7. 4WD:

CHECK AND REPLACE DIFFERENTIAL OIL (See page 29–7)

8. ROTATE TIRES (See page 28–1)

BODY

9901B–03

ON–VEHICLE INSPECTION

1. Canada:

TIGHTEN BOLTS AND NUTS ON CHASSIS AND BODY

(a) Where necessary, tighten all the parts of the chassis.
- Front axle and suspension
- Drive train
- Rear axle and suspension
- Brake system
- Engine mounting, etc.

(b) Where necessary, tighten all the parts of the body.
- Seat belt system
- Seats
- Doors and hood
- Body mountings
- Fuel tank
- Exhaust pipe system, etc.

2. REPLACE AIR CONDITIONING FILTER

(a) Remove the glove compartment assembly.
(b) Remove the filter case from the filter outlet.
(c) Remove the filter from the filter case.
(d) Replace the filter with a new one.
(e) Installation is in the reverse order of the removal.